COTTAGE GROVE CITY COUNCIL March 4, 2026

12800 RAVINE PARKWAY SOUTH
COTTAGE GROVE, MINNESOTA 55016

COUNCIL CHAMBER - 7:00 PM

1 Call to Order

2 Pledge of Allegiance

3 Roll Call

4 Open Forum

5 Adoption of Agenda

6 Presentations

A Annual Photo Contest
*Staff Recommendation: Receive information on Annual Photo Contest winners.*

B Firefighter/Paramedic Swearing In Ceremony
*Staff Recommendation: Swearing-in and recognition of Firefighters/Paramedics Michael Dandl, Sam Anderson, and Adam Higley.*

C Woolery Scholarship Fund Check Presentation
*Staff Recommendation: Allow Justin and Kim Olsen and the Cottage Grove Lions an opportunity to present donations to the Cottage Grove Public Safety Board for the Woolery Scholarship.*

D Proclamation - Gary Spooner Day
*Staff Recommendation: Proclaim March 15, 2026, as Gary Spooner Day.*

7 Consent Agenda

A City Council Regular Meeting Minutes (2026-02-04)
*Staff Recommendation: Approve the February 4, 2026, City Council Regular Meeting Minutes.*

B City Council Special Meeting Minutes (2026-02-04)
*Staff Recommendation: Approve the February 2, 2026, City Council Special Meeting Minutes (2026-02-04)*

C Planning Commission Minutes (2025-12-15)
*Staff Recommendation: Accept and place on file the minutes from the December 15, 2025, Planning Commission meeting.*

D Convention and Visitors Bureau Meeting Minutes (2025-11-25)
*Staff Recommendation: Approve Convention and Visitors Bureau Meeting Minutes (2025-11-25)*

E Planning Commission Appointments - Madison and Fischer
*Staff Recommendation: Appoint Bradley Madison to the Planning Commission with a term ending on February 29, 2028, and appoint Commissioner Jessica Fischer to the Planning Commission Chair position through February 28, 2027.*

F ACHP Commission Appointments - McDermott and Doheny
*Staff Recommendation: Approve the appointment of Joseph McDermott and Mary Doheny to their first*

*terms on the Advisory Committee on Historic Preservation, effective March 1, 2026, and ending February 29, 2028.*

G Lower Potency Hemp Edible Retailer License — G-Will Liquor
*Staff Recommendation: Approve the Lower Potency Hemp Edible Retailer License to Cherokee Liquors (DBA G-Will Liquors) at 6999 80th Street South, Cottage Grove.*

H Temporary Gambling License - Phoenix Residence
*Staff Recommendation: Authorize issuance of a single-occasion gambling permit to Corrie Lynn Kopischke on behalf of Phoenix Residence, to conduct a raffle at River Oaks Golf Course (11099 Hwy 61, Cottage Grove) on June 8, 2026, from 12:30-6:00 PM.*

I Temporary Gambling License - Accacia Lodge No. 51
*Staff Recommendation: Authorize issuance of a single-occasion gambling permit, David Gene Martin, on behalf of Accacia Lodge No. 51, to conduct a raffle at 11094 70th Street South, Cottage Grove, on October 3, 2026, at 6:00 PM.*

J Washington County Wellness Grant Acceptance
*Staff Recommendation: Approve the grant agreement with Washington County in the amount of $3,000 and authorize the expenditure of the $300 matching contribution.*

K Rental License Approvals
*Staff Recommendation: Approve the issuance of rental licenses to the properties listed in the attached table.*

L Sale of Surplus Equipment - eBikes Purchase
*Staff Recommendation: 1) Authorize the department to sell two ATVs (Units #5398 and 5399) to 61 Marine & Sports for $5,000.00. 2) Authorize the department to purchase two E-bikes with the proceeds from the sale of surplus equipment. The cost not to exceed $5,000.*

M Authorization to Purchase Replacement Squad
*Staff Recommendation: Approve the purchase of a replacement vehicle for the administrative fleet.*

N Bike Park Service Agreement
*Staff Recommendation: Authorize service agreement with Pathfinder Trail Building, LLC for Bike Park jump line improvements for the amount of $73,608.*

O Kingston ECP Grant Application
*Staff Recommendation: Authorize staff to apply for a MN DNR Expedited Conservation Partners grant for Kingston Park native habitat restoration in the amount of $75,000.*

P Ice Arena Kraus-Anderson Agreement
*Staff Recommendation: Authorize Construction Manager as Adviser AIA C132 contract with Kraus Anderson for preconstruction services in the amount of $10,000 and preconstruction administration and management fee equal to 2.25% (estimated at $91,842) of the project costs for the Ice Arena Remodel Project.*

Q 2026 Washington County Grant Agreement for Municipal Recycling
*Staff Recommendation: Approve the 2026 Grant Agreement for Municipal Recycling Grant Distribution in the amount of $60,078.00.*

R 2026 Standard Specifications for Utility and Street Construction, Standard Detail Plates, and Engineering Design Standards
*Staff Recommendation: Approve the Cottage Grove 2026 Standard Specifications for Utility and Street Construction, the 2026 Standard Detail Plates, and the 2026 Engineering Design Standards.*

S 2026 Pavement Management - Approve Plans & Specifications and Authorize Bidding
*Staff Recommendation: Adopt Resolution 2026-021 approving the plans and specifications and authorizing bidding for the 2026 Pavement Management Project.*

T Hamlet Pond - Change Order & Final Payment
*Staff Recommendation: Approve Change Order #1 and adopt Resolution 2026-029 approving the final payment of $169,818.48 for the 2025 Hamlet Pond – Phase 2: Bank Grading and Sediment Removal Project.*

U SCADA Integrator Professional Services Agreement
*Staff Recommendation: Approve the Professional Services Agreement with In Control, Inc. and appropriate officials are hereby authorized to sign all necessary documents to effectuate these actions.*

V Water Service Repair-Assessment Waiver Agreement
*Staff Recommendation: 1) Approve the Assessment Waiver Agreement for 6237 64th Street South and appropriate officials are hereby authorized to sign all necessary documents to effectuate these actions. 2) Adopt the assessment in the amount of $6,300.00 as outlined in the agreement.*

W LCCR Grant Submission Authorization - Mississippi Dunes Development Project
*Staff Recommendation: Adopt Resolution 2026-038 authorizing staff to apply for the Minnesota LCCMR grant in the amount of $386,250 to assist in the completion of plans for the Mississippi Dunes Park Building.*

8 Approve Disbursements

A Approve Disbursements
*Staff Recommendation: Approve disbursements from 02-13-2026 through 02-26-2026 in the amount of $4,366,287.26.*

9 Public Hearings

10 Bid Awards

11 Regular Agenda

A Panera – Site Plan Review and Conditional Use Permit
*Staff Recommendation: 1) Adopt Resolution 2026-036 approving a Site Plan Review for the construction of a restaurant and associated site improvements to be located at 7162 East Point Douglas Road South. 2) Adopt Resolution 2026-037 approving a Conditional Use Permit for a Restaurant with a Drive-up Window to be located at 7162 East Point Douglas Road South. 3) Approve the Permanent Utility Easement, Encroachment Agreement, Permanent Drainage and Utility Easement, Permanent Sidewalk Easement, and the Stormwater Management and Facilities Agreement with DCJ Cottage Grove, LLC.*

B New Life Church (11245 Point Douglas Drive South) – Site Plan Review
*Staff Recommendation: 1) Adopt Resolution 2026-035 approving the Site Plan Review for a 5,814 square foot building addition to the existing New Life Church building located at 11245 Point Douglas Drive South. 2) Approve the Stormwater Management Facilities Agreement with New Life Community Church.*

12 Council Comments and Requests

13 Workshops - Open to Public

A Ordinance Amendments Workshop - Code Updates
*Staff Recommendation: Provide direction on proposed code updates.*

B 2026 Mill and Overlay Improvements — 95th Street Lane Reallocation
*Staff Recommendation: Receive information on the 95$^{th}$ Street Lane reallocation and provide feedback to staff.*

14 Workshops - Closed to Public

15 Adjournment

# City Council Action Request

# 6.A.

| | |
|---|---|
| **Meeting Date** | 3/4/2026 |
| **Department** | Communications |
| **Agenda Category** | Presentation |
| **Title** | Annual Photo Contest |
| **Staff Recommendation** | Receive information on Annual Photo Contest winners. |
| **Budget Implication** | N/A |
| **Attachments** | 1. 2026 Annual Photo Contest |

**TO:** Honorable Mayor and City Council
Jennifer Levitt, City Administrator

**FROM:** Phil Jents, Communications Manager

**DATE:** February 25, 2026

**RE:** 2026 Annual Photo Contest

---

## Background

Cottage Grove is a beautiful place to live and many of our residents are talented, creative individuals. The City wanted to, once again, showcase that beauty and talent from our community by hosting the annual photo contest.

The annual photo contest has been a tradition spanning at least a decade. It has been a popular contest and something that many staff look forward to voting on each year.

The City of Cottage Grove promoted this contest through its various communication channels including social media and the Cottage Grove Reports. Photo submissions were organized by the communications team and sent to city staff, who voted for their favorite in each category. City staff were asked to look for images that represent each category well.

All photos considered for judging were taken within the city limits. Participants submitted photos along with their title in one of four categories. The categories for 2026 included Life in Cottage Grove, Animals, Lifestyle, and Landscape.

This is the breakdown of how many submissions we received per category:

- **Life in Cottage Grove:** 5 photos accepted for submission.
- **Animals:** 26 photos accepted for submission.
- **Lifestyle:** 10 photos accepted for submission.
- **Landscape:** 45 photos accepted for submission.

Total submissions: 86.

## Category Winners

- **Life in Cottage Grove:** “Farm on the Hill” by Jean Anderson
- **Animals: “**Fox on Lamar Ave” by Erin Spence
- **Lifestyle:** “Baby Rainbow on the Way” by Zoua Her
- **Landscape:** “Where Summer Lingers” by Charlene Swanlund
- **Best In Show:** “Mirror Flight” by Charlene Swanlund

# City Council Action Request

# 6.B.

| | |
|---|---|
| **Meeting Date** | 3/4/2026 |
| **Department** | Public Safety |
| **Agenda Category** | Presentation |
| **Title** | Firefighter/Paramedic Swearing In Ceremony |
| **Staff Recommendation** | Swearing-in and recognition of Firefighters/Paramedics Michael Dandl, Sam Anderson, and Adam Higley. |
| **Budget Implication** | N/A |
| **Attachments** | None |

# City Council Action Request

# 6.C.

| | |
|---|---|
| **Meeting Date** | 3/4/2026 |
| **Department** | Public Safety |
| **Agenda Category** | Presentation |
| **Title** | Woolery Scholarship Fund Check Presentation |
| **Staff Recommendation** | Allow Justin and Kim Olsen and the Cottage Grove Lions an opportunity to present donations to the Cottage Grove Public Safety Board for the Woolery Scholarship. |
| **Budget Implication** | N/A |
| **Attachments** | 1. PS Board Check Presentation Scholarship Fund March 4 |

**To:** Honorable Mayor and City Council
Jennifer Levitt, City Administrator

**From:** Peter J Koerner, Director of Public Safety

**Date:** March 4, 2026

**Subject:** **CRAIG WOOLERY SCHOLARSHIP FUND CHECK PRESENTATION**

---

## INTRODUCTION

After Director of Public Safety Craig Woolery's retirement, Justin and Kim Olsen donated to the Cottage Grove Public Safety Board, creating a scholarship fund. The Olsen's wanted to recognize the substantial difference Craig made in his 35-year career with Cottage Grove Public Safety and provide others an opportunity to pursue a meaningful law enforcement, Emergency Medical Services (EMS) or firefighter career. Justin and Kim Olsen have committed to a yearly contribution to the scholarship fund. Since that time, local residents and the Cottage Grove Lions have provided donations. The Public Safety Board continues to support the scholarship fund.

The Cottage Grove Public Safety Board is pleased to offer the Craig Woolery Scholarship to residents of Cottage Grove pursuing post-secondary education in Law Enforcement, EMS or firefighting. The Cottage Grove Public Safety Board welcomes and supports diversity in the application and award process.

Police Department staff will provide an overview of the Public Safety Board and outline some of their donations and their support of Cottage Grove Public Safety.

Both Justin and Kim Olsen and the Cottage Grove Lions will present checks to the Cottage Grove Public Safety Board for the Woolery Scholarship Fund.

## RECOMMENDATION

Allow Justin and Kim Olsen and the Cottage Grove Lions an opportunity to present donations to the Cottage Grove Public Safety Board for the Woolery Scholarship.

# City Council Action Request

# 6.D.

| | |
|---|---|
| **Meeting Date** | 3/4/2026 |
| **Department** | Administration |
| **Agenda Category** | Action Item |
| **Title** | Proclamation - Gary Spooner Day |
| **Staff Recommendation** | Proclaim March 15, 2026, as Gary Spooner Day. |
| **Budget Implication** | N/A |
| **Attachments** | 1. March 15_Gary Spooner Day_Presentation Version |

PROCLAMATION
March 15, 2026 Gary Spooner Day

WHEREAS, the South Washington County Bulletin started in 1958 as the "Newport News" and was sold in the early 1960's as a tabloid; and

WHEREAS, the Bulletin was purchased by Gary Spooner and John Herman in 1970 and was converted into a full newspaper; and

WHEREAS, they operated the newspaper and opened the Bulletin License Center along 80th St (current site of Kohls) and in 1983 Gary Spooner and William Kruger bought out John Herman; and

WHEREAS, the South Washington County Bulletin continued to serve the Cottage Grove community under the operation of Mr. Spooner until it was bought by the Republican Eagle in 1994; and

WHEREAS, Gary has been and continues to be an integral part of the Cottage Grove community. He is a charter member of the Cottage Grove Chapter of the Lions Club, a charter member of the South Washington County Rotary, a founder of the Cottage Grove Chamber of Commerce, served on the budget committee for the school district, and much more; and

WHEREAS, Gary Spooner was given the 2025 Historic Preservationist of the Year Award by the Cottage Grove City Council for his work at the Cottage Grove Bulletin; and

WHEREAS, the celebration for Gary Spooner's 87th birthday is being held on March 15, 2026.

NOW, THEREFORE, the Mayor and City Council of the City of Cottage Grove, County of Washington, State of Minnesota, hereby proclaim March 15, 2026, as:

## Gary Spooner Day

Passed this 4th day of March 2026.

_____
Myron Bailey
Mayor

# City Council Action Request

# 7.A.

| | |
|---|---|
| **Meeting Date** | 3/4/2026 |
| **Department** | Administration |
| **Agenda Category** | Action Item |
| **Title** | City Council Regular Meeting Minutes (2026-02-04) |
| **Staff Recommendation** | Approve the February 4, 2026, City Council Regular Meeting Minutes. |
| **Budget Implication** | N/A |
| **Attachments** | 1. 2026-02-04 City Council Meeting |

# COTTAGE GROVE CITY COUNCIL

**February 4, 2026**

**12800 RAVINE PARKWAY SOUTH**
**COTTAGE GROVE, MN 55016**

## COUNCIL CHAMBER - 7:00 P.M

### 1. CALL TO ORDER

The City Council of the City of Cottage Grove, Washington County, Minnesota, held a regular meeting on February 4, 2026, at Cottage Grove City Hall, 12800 Ravine Parkway. Mayor Bailey called the meeting to order.

### 2. PLEDGE OF ALLEGIANCE

The audience, staff, and City Council Members stood and recited the Pledge of Allegiance.

### 3. ROLL CALL

Tammy Anderson, City Clerk, called the roll: Mayor Bailey-Here; Council Member Clausen-Here; Council Member Garza-Here; Council Member Olsen-Here; Council Member Thiede-Absent.

Also present: Jennifer Levitt, City Administrator; Ryan Burfeind, Public Works Director; Zac Dockter, Parks and Recreation Director; Phil Jents, Communication Manager; Chad Donnelly, Deputy Public Works Director; Paul Sponholz, City Engineer; Pete Koerner, Public Safety Director; Cynthia Kirchoff, City Attorney-LeVander, Gillen & Miller, PA; Brenda Malinowski, Finance Director; Emily Schmitz, Community Development Director.

### 4. OPEN FORUM

Mayor Bailey said this is the opportunity for people to speak on something that is not on tonight's agenda. We have three people who signed up to speak, so I'll call them up. Please limit your comments to three minutes.

Jon Lyksett said Good Evening, Mayor and Council, 613 Park Valley Drive West, Hopkins, Minnesota. He said some of you might know me. I'd like to start by saying I'm currently an employee of the City of Minnetonka, and what I am saying I'm saying of my own accord, and I am not here as a representative of that community. I grew up in Cottage Grove, I lived and worked here for the better of 20 years. I'm here to speak to you about the HERO Center's contract with ICE. I understand that the cities of Cottage Grove and Woodbury made an agreement with ICE to use their training facilities prior to the extreme surge that has caused a fair amount of damage to immigrant communities in Minnesota, Illinois, Washington, and more. Two weeks ago, a group of West Metro Police Chiefs made clear what's happening with Operation Metro Surge. ICE agents are using unconstitutional tactics and racial profiling to target brown and black residents. Its agents are making unsafe choices, and as you know doubt know it by know, ICE is responsible for two of the three reported homicides in Minneapolis in 2026. ICE, as it's operating now, is a stain on law enforcement in our community. The agents are acting outside of the boundaries of the Constitution. So, here's my ask: End the contract that the HERO Center has with ICE. Admittedly, I don't know the full details of this contract, but I do know that most agreements like this can be ended as long as sufficient notice is given. Cancellation of the agreement can usually be given without specific violation of terms. This action wouldn't be taken without consequences, and I understand that there's a risk but you, as a Council, have the power to make this decision. Which is more important, eliminating a small revenue stream or sending a message to the Federal government that the unconstitutional and despicable ways that they are dealing with immigration enforcement aren't acceptable in Cottage Grove, Minnesota, and our country? Thank you.

Mayor Bailey replied thank you, and I should just mention for the public, as you're coming up, we will provide you with a written response, just so you know; that's why we ask for your address, so thank you.

Good Evening, Mr. Mayor, and Good Evening, Council. My name is Nick Thorson, I live at 6668 Hinterland Trail South, I've been a resident of Cottage Grove for 30+ years. My question is actually to the Mayor and the Council: What steps, if any, has the City taken to engage with local immigrant communities, including advocacy groups to understand their concerns and ensure that they are heard by City leadership? And with that, I yield my time.

Mayor Bailey replied okay, thank you. I can just share as you're going back that we are doing that, but we'll send you the information of what we're doing, and our Public Safety Department is doing a phenomenal job of reaching out to our minority community here in Cottage Grove, along with myself.

Hello, thank you for having me here. My name's Jacob Stonecipher, I live at 7348 Iden Avenue, here in Cottage Grove. I am arguably a less-tenured resident than the person that just spoke, I moved here in 2017. It was a very conscious choice between myself and my spouse to find a community that was safe, a community that was engaged, and a community that we thought we could live long term, and we have so far found that here, so thank you to the City Council and Mayor Bailey for making that possible. I am here to speak also on the HERO Center, and I've been in communication a little bit with some of you to ask a few of the questions. I'm here tonight just to make sure that some of those questions are put on public record to make sure that they are actually considered. So, first, with the HERO Center, I know and I've been talking with you folks about how the FOC is an independent Board that makes the governing decisions on here. Due to the Joint Powers Agreement in 2018, that Board was actually set up to uphold the best interests of a major asset of both cities that we have; it does create a lot of revenue in certain forms for us through all the different contracts, and I understand that by cutting one Federal contract, we put the risk of others at the same time, and that would be a burden to the City. I've asked a few times in those that we are provided what specific number that would be, and I would love to know what the breakdown of those contracts are to know what the risk truly would be by eliminating that. I do believe that the City and the residents here need to have that in front of them before they make any informed or big decisions like this. Knowing that it might not be possible for us to feasibly end the contract mid-time without putting a major burden onto the City's budget, there are other things that we need to be doing to make sure that our HERO Center, a major asset and revenue earner for our City, is protected: 1) Protection of reputation. We all know and I hope you know that reputation of law enforcement is tantamount to respect of law enforcement. The previous gentleman shared some of the horrific acts that are happening, and like it or not, those reflect on every bit of law enforcement here on out, as well as reflect on the training standards that we have here for our HERO Center. We are independent in a way that we allow certain agencies to not have trainers of our own fruition and do self training, and I think the behavior that we've seen is unacceptable; and as a City, we should take thought into making sure that outside agencies, who have poor training standards that do not match the reputation of the HERO Center, should be taken into effect and those costs should be passed along to that Center. 2) Lastly, to wrap it up real quick, we are at risk of things like vandalism, police agencies have to respond to peaceful protesters and unpeaceful protesters, and there should be a rate for organizations that increase that risk, to pay for that extra cost because our City does have a small budget, and we cannot afford to fully take that on. So, thank you very much.

Mayor Bailey replied thank you, appreciate it.

Mayor Bailey asked if there was anybody who happened to walk in that did not get a chance to sign up and you would like to speak. Yeah, if you want to go up, and please state your name and address for the record, please.

So, I've prepared something to read. I'm sorry, I'm super, super nervous, it's been 20 years since I've read anything in front of anybody this size, so.

Mayor Bailey asked if you will, though, just state your name and address, though, for the record, and don't be nervous, we're here to listen.

My name is Amber, and I'm on Ironwood Avenue in Cottage Grove. I came here today because we have seen a huge rise in ICE agents in our community, and I feel like there's been a dismantling of the local authority's ability to

protect and serve their communities. Constitutional Rights are being egregiously violated by ICE, and we have every right to be angry that our local governments aren't allowed to stop the Federal agents, who have not been properly vetted or trained, from barreling through our streets and acting on impunity and abusing the authority they have, as if they are above the law. We're seeing agents in rental cars with faces masked, and they're kidnapping people off the streets because they're getting away with it. This is not a hypothetical concern. It wasn't very long ago when we all witnessed firsthand the ultimate cost of anonymous policing when Speaker Melissa Hortman was murdered by a man impersonating a police officer; he was hiding in a mask with a fake badge and a car that was altered to look like an undercover police car. I also want to take note that and tell you guys that if you go onto Amazon, you can find that these police lights, the flashers that you see in these cars, can be purchased for $30 off of Amazon, so anybody really could get one and put them in their car. The assassination of Melissa Hortman and her husband by a gunman is exactly why the distinction between undercover work in Public Safety is a matter of life and death. Right now, you're allowing ICE and CBP to use those same tactics, they're hiding behind masks and blacked-out windshields and covering their license plates; we've even seen them using the fake canned snow sprayed over their license plates. By letting ICE and CBP break the law, you're creating a safety gap that any radical with a gun or a rental car can walk right through. If a citizen can't see a face and can't see a plate, they have to assume it's a threat. When people cannot tell the difference between a Federal agent and a radicalized gunman, because both are masked or disguising themselves by driving unmarked rentals while obscuring their plates, the City has a moral and legal obligation to act. I did some research on the laws, and the State does have laws regarding windshield tinting, and the Minnesota Statute 169.71, Subd. 4, states that a person must not drive or operate any motor vehicle in the State of Minnesota upon a street or highway under the following conditions: When the windshield is compromised, covered by, or treated with any material, which has the effect of making the windshield more reflective or any other way, reducing light transmission through the windshield. There are exceptions in this clause, and the only one that I can see them trying to use would be that they're government officials. In that State law, it says that there is an exception for the rear and side windows of police cars, but not the front windshield. It doesn't include the front windshield and most certainly doesn't give these people the right to completely black out their front windows, which we're seeing all over. As far as their license plates go, Subd. 6 says that a motor vehicle of any kind, other than those provided in Subd. 2 or 4, which accounts for semitrailers or collector cars that were made in 1972 or earlier, one plate must be displayed on the front and one on the back of the vehicle. This makes it a crime to cover a license plate with any material whatsoever in the State of Minnesota, and Governor Walz and the DNS has already called this terrorizing our community and criminal activity. If a citizen did this, they'd be in handcuffs, so why are our local police standing by while Federal agents do it to facilitate illegal abduction of our residents?

Mayor Bailey said all right, I know you're nervous, it looks like you've got quite a bit there.

Amanda replied no, I have a couple of printouts. I'm actually almost to the end of what I had to say, and then I have the proposal that I printed out for you guys to have.

Mayor Bailey said because we do limit it to three minutes, so do you want to just wrap up?

Amanda said I came to ask that you make an Executive Order to ban ICE and CBP from our parks and our City parks and streets and parking lots and that our police start holding or stopping these cars that have blacked-out front windshields and are missing license plates and ticketing them like they would with us. Minneapolis just did this, and so we know that it is possible because the Minneapolis Mayor, Minneapolis and St. Paul, among other communities that have joined their coalition that they're inviting other cities to join as well, have already made it so that they're not allowed in the parks or they're not allowed to stage in parking lots or City-owned streets.

Mayor Bailey said okay. He asked Amanda if she had a sheet there that she wanted to provide us, and she replied yes, I do. Mayor Bailey said if you want to do that, then we can, and I do appreciate you sharing your insights. Thank you.

As no one else wished to speak during Open Forum, Mayor Bailey closed Open Forum.

## 5. ADOPTION OF AGENDA

Motion by Council Member Olsen to adopt the agenda; second by Council Member Garza. Motion carried: 4-0.

## 6. PRESENTATIONS

A. Swearing-In and Badge Pinning Ceremony
*Staff Recommendation: Perform the Swearing-In and Badge Ceremony for Rebecca Dziki, Timothy Gunderson, and Ryan Sheak.*

Mayor Bailey said there are a lot of people here tonight to celebrate the three new officers that are being officially sworn in this evening. So, Council, I'm going to have you meet me down in front, and then I'm going to turn it over to our Director or Public Safety, Pete Koerner. Commissioner, if you want to come up here with us, you're welcome to do so.

Director Koerner said Honorable Mayor, Council, thank you very much for having us here tonight. I'll give you just a quick rundown, this didn't just happen overnight, we have three new officers that we're going to introduce you to tonight, but they've been with us for a year now. So, with the hiring process, they did a psychological, a background, and then once they were hired by us, they went through an Academy with our department for a couple weeks, and then about a 12-week of field training. Of course, they're all laterals, so they had experience, so that helped speed up a few things. So, they have been sworn in officially, this is more of the ceremonial swearing in, gives them a chance to be in front of their family and friends and our officers as well. We don't take this night for granted, our Cottage Grove officers are top notch, and we really appreciate all of the community support that they have. They know it is an honor, they know what this badge symbolizes; we've never really talked about authority, it's more about responsibility, integrity, ethics, and all of that, and that's what our badge represents when we talked about our department's vision.

With that, this is their night, so we're going to start with Officer Dziki if she can come up. I just want to read a short bio, and I had each of them kind of put it together. So, if you want to come up next to the City Administrator.

So, Rebecca is a Cottage Grove native and a Park High School graduate. After school, she went to college, and she worked in healthcare for 13 years. She then decided to go back to college and pursue a career in law enforcement. Prior to joining the Cottage Grove Police Department, she worked for the Washington County Sheriff's Office as a deputy, and she worked primarily in the Newport contract, which was good, because I think she got heavily recruited every night at coffee break. So, thank you to all of the officers who have been doing the recruitment for us. In Rebecca's spare time, she enjoys spending time with her family at the cabin and also riding motorcycles. She put this quote in there: *She is honored to serve the citizens of Cottage Grove and look forward to a career rooted in professionalism, accountability, and respect.* After her oath, her husband, Dustin, will be pinning on her badge.

Administrator Levitt asked Rebecca to please raise your right hand and repeat after me, which she did. Administrator Levitt congratulated Rebecca and everyone applauded. Rebecca's husband, Dustin, pinned on her badge and everyone applauded again.

Director Koerner said next is Timothy Gunderson. I apologize, we had to go a little further north here, we didn't get a Park High kid, but close, he grew up close. Tim grew up in Mahtomedi with his parents and four siblings. He graduated from Mahtomedi High School and then pursued a career in law enforcement. He attended Alexandria Technical and Community College. After college, he began working at the Washington County Jail, and after 2-1/2 years, he transferred to patrol; he was a Washington County deputy for about 1-1/2 years. Tim's quote: *I was then lucky enough to join Cottage Grove P.D. in January 2025.* Director Koerner said not kissing up to you, we're lucky that you're in the group, too, and we were able to hire you. In Tim's spare time, he no longer uses chainsaws, but now he likes to hunt, play hockey, and go to concerts. After his oath, his father, Tim, will be pinning on his badge.

Administrator Levitt asked Tim to please raise your right hand and repeat after me, which he did. Administrator Levitt congratulated him and everyone applauded. Tim's father, Tim, pinned on his badge and everyone applauded again.

Director Koerner said last, but not least, Officer Sheak. I'm slipping, another one not from Park but he lives in Cottage Grove. Ryan grew up in White Bear Lake where he graduated from high school in White Bear, later attended Minnesota State University-Mankato for business management. Ryan spent the next 12 years working in corporate America until 2016, when he transitioned into law enforcement. From 2016 to 2025, Ryan worked at the White Bear Lake Police Department where he got to proudly serve his hometown community for nine years. During his time with White Bear P.D., he was fortunate enough to work in a variety of roles, Detective and School Resource Officer, but is most thankful for the opportunity to give back and serve the community in which he grew up. In January 2025, Officer Sheak and his family (smart man) decided to join the Cottage Grove Police Department where he now gets to serve the community in which he lives. Officer Sheak and his wife, Amber, have been married for 20+ years and have three children, Donovan, Sidney, and Weston. When Officer Sheak is not working, he enjoys giving back to our community and is largely known around town as Coach Sheak. Officer Sheak is thankful to be a part of the Cottage Grove P.D. family and looks forward to supporting and continuing to serve our community.

Administrator Levitt asked Ryan to please his right hand and repeat after me, which he did. Administrator Levitt congratulated Ryan and everyone applauded. Director Koerner said I forgot to mention that his wife, Amber, is going to be pinning Ryan's badge. Amber pinned Ryan's badge and everyone applauded again.

All three new officers shook hands with Mayor Bailey, the City Council Members, and Washington County Commissioner Bigham. Afterward, photographs were taken with the Council Members, Washington County Commissioner Bigham, Minnesota Representative Wayne Johnson, and all of the Cottage Grove police officers in attendance. Everyone applauded.

Mayor Bailey said that's one of the fun things we get to do, and Council Member Garza agreed, and seeing all of the families here in support is pretty cool. Council Member Garza said I just love how all of our Public Safety supports one another, like they show up every time, badge pinning, whatever it is, they are there together. So, that is always so nice to see. Mayor Bailey said I totally agree.

B. Proclamation - February 2026 Black History Month.
*Staff Recommendation: Proclaim February 2026 as Black History Month.*

Mayor Bailey said he'd asked Council Member Justin Olsen to read this proclamation tonight.

Council Member Olsen said thank you, mayor, and read aloud the Black History Month proclamation.

Motion by Council Member Olsen to proclaim February 2026 as Black History Month; second by Council Member Garza. Motion carried: 4-0.

## 7. CONSENT AGENDA

A. Approve the January 21, 2026 City Council Regular Meeting Minutes.
B. Approve the reappointment of the Commissioners detailed in the memo to their designated Commissions.
C. Approve the issuance of rental licenses to the addresses listed in the attached table.
D. Approve Resolution 2026-018, accepting the 4th Quarter Donations.
E. Approve the City of Cottage Grove's 2026 Legislative Agenda.
F. Accept and approve the Grant Award in the amount of $7,500 from the United States Police Canine Association.
G. Authorize the purchase of a Ford E-450 Road Rescue Ultramedic from Everest Emergency Vehicles with an estimated cost of $299,627 and an estimated delivery of January 2027.
H. Authorize the Statewide Health Improvement Partnerships Grant Agreement for $3,700, to be used for expansion of the existing Meadowgrass Park Community Garden.

I. Authorize staff to apply for the Minnesota LCCMR Grant Funding to assist in the completion of the Mississippi Dunes Master Plan.
J. Authorize the Fire Department to apply for a FY25 FEMA Assistance to Firefighter Grant in the amount of $380,585.
K. Authorize Service Agreement with Oertel Architects for Ice Arena Remodeling Project final design services.
L. Staff recommends that the City Council authorize River Oaks to proceed with recycling the equipment listed in the memo.
M. Receive the fuel pricing for 2026 under State Contract Number 281983.
N. Approve the increased budget amount of the bucket truck from $210,000 to $236,000 & authorize purchase.
O. 1) Adopt Resolution 2026-024 approving the Mississippi Landing 3rd Addition Final Plat, which is an approximate 10.82-acre residential development with 66 single-family lots. 2) Approve the Mississippi Landing 3rd Addition Development Agreement with Rachel Development, Inc. and authorize execution of all easements, deeds, and agreements required for the plat and project. 3) Adopt Resolution 2026-025, approving the Mississippi Landing 3rd Addition Development Plans dated January 26, 2026, prepared by Alliant Engineering, and as modified by request of the City Engineer.
P. Adopt Resolution 2026-027 awarding the Front Desk Area Security Upgrade contract to RAK Construction in the amount of $96,955, and authorize the Service Agreement between RAK Construction and the City of Cottage Grove.
Q. Adopt Resolution 2026-022, supporting the City's Better Utilizing Investments to Leverage Development (BUILD) grant application for the County 19A/100th Street Realignment Project.

Council Member Clausen wished to pull Item G, Authorize the Order of Replacement Ambulance, and Council Member Garza wished to pull Item D, 4th Quarter Donations, on the Consent Agenda for further comment and/or discussion.

Council Member Clausen said thank you, Mayor, Council Members. EMS is where I grew up and cut my teeth so I've been dealing with ambulances and this for 40+ years. This is usually a very simple thing, we're going to authorize the purchase of an ambulance tonight, and I just wanted to briefly say why we're doing this. It's going to be delivered in 2027, if not later. The state of the industry is that ambulances take about three years to build because there's very few manufacturers now, and if we didn't preorder this now, we wouldn't be able to get it until 2029. The ambulance vendor that we use was nice enough to hold a build slot for us, so it allows us to order it tonight and maybe get it next year; if we didn't, again it would take years to get this ambulance. The ambulance it's replacing, the patient compartment is 22 years old, which I worked out of, back in the day; so, its well past its useful life, and the ambulance is well past its useful life. Anyway, I just wanted to mention that I support purchasing this item tonight. Thank you.

Mayor Bailey said I want to piggyback real quick, just for the public to be aware. The price for this ambulance is just under $300,000, and that does not include the items that go inside it, which I believe are at least another $150,000 to $200,000 if we put everything in it. So, we're talking about a half a million dollar ambulance, so it is a pretty hefty investment, and that is the reason we're doing this now so we can get in queue. All right, thank you.

Council Member Garza said I would like to recognize where we received our 4th Quarter Donations in 2025. They were all related to our Hometown Holiday Celebration, but we're just excited that we were able to bring in about $5,100. The donations were received from: Stantec, $2,400; LeVander, Gillen & Miller, $500; Bolton & Menk, $2,000; Sagent Behavioral Health, $200.

So, the total amount donated in the 4th Quarter 2025 was $5,100, so we thank those businesses that donated to our City. Thank you.

Motion by Council Member Clausen to approve the Consent Agenda; second by Council Member Olsen.
Motion carried: 4-0.

## 8. APPROVE DISBURSEMENTS

*Staff Recommendation: Approve disbursements from 01-16-2026 through 01-29-2026 in the amount of $5,489,440.95.*

Motion by Council Member Garza to approve disbursements; second by Council Member Olsen.
Motion carried: 4-0.

## 9. PUBLIC HEARINGS

A. Cedarhurst Historic District Nomination to City Register of Historic Sites and Landmarks
*Staff Recommendation: 1) Hold the Public Hearing for the nomination of the Cordenio Severance House (Cedarhurst) Mansion and the Gardener's Cottage to the City Register of Historic Sites and Landmarks. 2) Adopt Resolution 2026-026 to place the Cordenio Severance (Cedarhurst) Mansion and significant outbuildings located at 6940 Keats Avenue South, and the Gardener's Cottage located at 9912 70th Street South on the City Register of Historic Sites and Landmarks to be known as the "Cedarhurst Historic District."*

Mayor Bailey said Max Erickson, our Planner, is here to walk us through this. So, welcome, Max.

Planner Erickson said thank you, Mayor and Members of the Council. Property owner Bellagala has applied for the designation of the Cedarhurst Mansion property, at 6940 Keats Avenue South, and the Gardener's Cottage property, at 9912 70th Street South, to the City's Register of Historic Sites and Landmarks. The applicant, Bellagala, has obtained a Historic Conditional Use Permits for both properties in order to operate a wedding and event center. Under City Code, Historic Conditional Use Permits are granted to properties that have a designated site or landmark on the City's Register of Historic Sites and Landmarks plus the Local or National Register. The mansion has been listed on the National Register since 1978, and staff have not come across any record that the mansion was ever officially inducted into the Local Register.

The procedure for adding nominations to the Local Register must follow City Code, Title 2, Chapter 2 requirements.

<u>Nominations must demonstrate</u>:

1) Its character, interest, or value as part of the history or cultural heritage of the City, the State, or the United States.
2) Its association with persons or events that have made a significant contribution to the cultural heritage of the City.
3) Its embodiment of distinguishing characteristics of architectural type or style, or elements of design, detail materials, or craftsmanship.

<u>Nominations must be reviewed by the ACHP</u>: In the year 2000, the ACHP had signs of significance for the Cedarhurst property. The findings of significance were granted under the same characteristic requirements as our model Code, not much has changed.

A study conducted in 2022 by New History outlines further finding and more details of the historic significance for both properties, as well as outbuildings and other features on the site. Additionally, it provides guidelines for preserving certain features of the site. The primary significance of the Cedarhurst site is its historical association with Cordenio Severance, as well as the architectural style, consistent with the early 20th century. Cedarhurst has been a benefit to the community by attracting business and services to Cottage Grove, as it was utilized as a wedding event center in the past. The combination of these findings satisfies characteristic requirements for City Code.

On October 14, 2025, the ACHP reviewed this application and unanimously recommended approval to Council to add both properties to the Historic Register as the Cedarhurst Historic District.

Another requirement is all nominations to the Local Register must have a Public Hearing. Planner Erickson said with that, I'll leave the Recommendation before you.

Mayor Bailey asked if Council had any questions for Planner Erickson, none were asked. Mayor Bailey asked if the applicant wished to address the Council and he did.

J.J. Maletsky said Mr. Mayor, Council Members, thank you, our address is Cedarhurst, you know where to find me. My only thing is we're announcing this thing to the world next week, so if anybody wouldn't mind just like not posting on social media for seven days, we'd appreciate it. We've just got a lot of publicity, and we're doing a few news articles and some pretty hefty marketing push starting next week. We're taking a different approach than we did the other time, so that's my only ask. Obviously, if we can get this thing approved, then we can start swinging hammers here in a couple of weeks. Any questions for me at all?

Mayor Bailey replied no, we're just glad to have you in town. J.J. said it's been a heck of a journey. Mayor Bailey said we're glad you're finally there. Council Member Garza said thank you.

Mayor Bailey opened the Public Hearing. No one spoke. Mayor Bailey closed the Public Hearing.

Motion by Council Member Olsen to Adopt Resolution 2026-026 to place the Cordenio Severance House (Cedarhurst Mansion) and significant outbuildings, located at 6940 Keats Avenue South, and the Gardener's Cottage, located at 9912 70th Street South, on the City Register of Historic Sites and Landmarks to be known as the "Cedarhurst Historic District"; second by Council Member Garza. Motion carried: 4-0.

Mayor Bailey said I'm looking forward to the official announcement next week. Now, everybody in the room here, mum's the word. Thank you.

## 10. BID AWARDS - None.

## 11. REGULAR AGENDA - None.

## 12. COUNCIL COMMENTS AND REQUESTS

Council Member Clausen said I have nothing to add tonight, Mayor, thank you.

Council Member Olsen said thank you, Mayor. First of all, I want to take a moment to recognize my colleague, City Council Member Monique Garza, as it is her birthday today, and I'm pretty sure it's 29, somewhere in that range, right? Council Member Garza replied I am the young age of 49. Council Member Olsen said well, congratulations and Happy Birthday. Council Member Garza said thank you.

Council Member Olsen said I also wanted to thank the folks who came to speak at Open Forum this evening for their respectful and inquisitive tone. There's nothing better than when people come prepared with really good questions, and I think the folks that spoke this evening had some really nice questions. So, you guys will all get a written response, but if you want to hang around until the meeting's done, which will be shortly, we can talk more, but thank you for being here.

And last, but not least, tonight we had one of our favorite events, I know we all love when we get to do the swearing in for different folks who have joined our City in a different capacity here or there. As Council Member Garza mentioned earlier, the Public Safety team always seems to turn out in big numbers. One of the things that I'm most proud of, and you heard our Public Safety Director, Pete Koerner, mention it, is we have several members of our Public Safety team who are local. They have that Park High diploma, or the P.H.D., as we like to call it, and it's always fun to celebrate that a little bit. One of the ways that we do that is we grow from within, we have young people who are interested in Public Safety, who get involved, whether it's an Explorer program or they become a volunteer Police Reserve, whatever. Then they go to school, and oftentimes they'll become a Community Service

Officer, and then of course, when there's an opportunity to become a regular police officer or a firefighter in town, they'll jump at that chance. There's a lot of good stuff that comes from that, and one of the ways we foster that is each year we make an effort to award at least two individuals with what's called the Craig Woolery Scholarship that is managed through the Public Safety Board. This scholarship for first responders covers police officers, firefighters, and EMS personnel. Our annual donation, my family and I, for this scholarship will be coming forward here in about a month. I believe Director Koerner's been behind the scenes, setting things up. We always like it when former Director Woolery can be here for that, so I'm looking forward to that, but I just wanted to put it out there that that donation will be coming forward in a month or so. If anybody is interested in joining us in donating towards young people, whose education and books and all of those things continues to go up and up and up in cost, but they want to pursue a career in Public Safety being a first responder, hopefully in our community, this is a great way to do that. You can make those donations directly to the Cottage Grove Public Safety Board, or you can certainly reach out to any of us here on the City Council or City staff for directions on how to make that work. But it's a great opportunity to support young people, who want to give back to their communities. And, with that, Mayor, I'll turn it back to you.

Council Member Garza said I have nothing, thank you, Mayor. I'm trying to get home. Mayor Bailey asked her is there a cake waiting for you at home? Council Member Garza replied I don't know. Hopefully, my family is watching and listening, and if there isn't, they'll run to Hy-Vee and get something.

Mayor Bailey said I'll say just a couple things real quick, then, to give them time to run quickly to Hy-Vee. Council Member Garza said I appreciate it. Mayor Bailey said yes, please get to Hy-Vee quick.

Mayor Bailey said first of all, we didn't mention it earlier, the City of Cottage Grove every year highlights Black History Month with a proclamation, along with Hispanic Heritage Month, and so on, as we go through Asian American, I can keep going, because we understand the importance of culture. As a matter of fact, I don't know if you noticed in our Public Safety Department, there are a lot of different I'll say nationalities or ethnicities, that were standing behind us here tonight. So, we love to make sure that what happens within our community, our Public Safety Department, mirrors it. But I also want to just acknowledge that Monique is our first ever African-American Council Member for the City of Cottage Grove, so we're very proud of her and the work that she's been doing. She just got reelected not that long ago and she's right into it again. I just want to say thank you for being part of our community, thank you for your support on the Council, and we wish you great luck in the rest of the year. Council Member Garza replied thank you. Mayor Bailey said so, I wanted to share that. Council Member Garza said thank you for having me, and Mayor Bailey replied absolutely.

The other thing I want to mention, believe it or not, it's so weird the way Easter is sometimes, because normally so far out from Ash Wednesday, you have the Fish Frys happening. And believe it or not, it's coming, and so I just want to acknowledge that the Friday Fish Frys are going to be back at River Oaks Golf Course, and that actually is started February 20. Service will run at River Oaks from 4:30 p.m. to 8:00 p.m. You do need to get reservations, so please just go online to River Oaks Golf Course and Event Center, and you can book your time; if there's not a specific time available, they'll give you other options there. I will tell you it fills up very quickly.

Council Member Olsen said you can also call if you're still a person who uses that method.

Mayor Bailey said that's true. So, if you are interested in that, you're welcome to do that. I do know there will be other Fish Frys around town, but I want to really just give a plug to River Oaks because they do a phenomenal job every year.

Lastly, on Valentine's Day, they're having a Valentine's Night Skate event, which is going to be held in the West Rink at the Cottage Grove Ice Arena, from 8:00-9:15 p.m. What's nice about the West Rink is they have all the fancy lights and the disco ball stuff. The last time I think they did Mighty Ducks over like New Year's and they completely sold out. So, if you are interested, admission is $7 per skater, you can pay it at the door, but I'd get there early; because what I heard last time, and we don't want to turn anybody away, but we had an overflow, which just goes to prove our Parks and Rec Department does an amazing job because everybody loves the programs that they're running. So, I just wanted to acknowledge that.

Mayor Bailey said tonight there aren't any Workshops, Open to the Public, or any that are Closed to the Public.

## 13. WORKSHOPS - OPEN TO PUBLIC - None.

## 14. WORKSHOPS - CLOSED TO PUBLIC - None.

## 15. ADJOURNMENT

Motion by Council Member Garza, second by Council Member Clausen, to adjourn the meeting at 7:48 p.m.
Motion carried: 4-0.

Minutes prepared by Judy Graf and reviewed by Tamara Anderson, City Clerk.

# City Council Action Request

# 7.B.

| | |
|---|---|
| **Meeting Date** | 3/4/2026 |
| **Department** | Administration |
| **Agenda Category** | Action Item |
| **Title** | City Council Special Meeting Minutes (2026-02-04) |
| **Staff Recommendation** | Approve the February 2, 2026, City Council Special Meeting Minutes (2026-02-04) |
| **Budget Implication** | N/A |
| **Attachments** | 1. 2026-02-04 City Council Special Meeting |

# COTTAGE GROVE CITY COUNCIL

**February 4, 2026**

**12800 RAVINE PARKWAY SOUTH**
**COTTAGE GROVE, MN 55016**

## TRAINING ROOM - 5:30 P.M

## 1. CALL TO ORDER

The City Council of the City of Cottage Grove, Washington County, Minnesota, held a Special Meeting on February 4, 2026, at Cottage Grove City Hall, 12800 Ravine Parkway. Mayor Bailey called the meeting to order.

## 2. AGENDA

A. 2026 Legislative Agenda
*Staff Recommendation: Review the 2026 Legislative Agenda.*

Mayor Bailey said so, first of all, thanks to all of our legislative team and county commissioner for joining us here in Cottage Grove this evening. Every year we like to do what we call our legislative agenda; we like to put out there, as I'm sure you get it from every city, and the county, and so on, kind of what our big fish are, what are the things that we are passionate about and looking for some help with. So, I'm going to stop right now and I'm going to share some info with you, kind of what we've been doing, and how you've helped us over this last year. And then I think just for some clarity, for some new faces that are in the room, we'll have everybody introduce themselves so that everybody knows who everybody is. And then we'll kick off some of the specifics, and I'm going to go with Ryan first when we get to that point.

So, the first thing I'll just mention, obviously we're very proud as a community of our heritage here, what's happening, we're definitely a growing community, and I think you all know that as you can see what's going on here. But I also want to talk about some of the things that you guys have helped us with, and it's kind of cool that we got it all in, which is awesome. So, from the Minnesota Clean Water, Land, and Legacy Fund, Cottage Grove has received $152,300 in grant funds to help with some water efficiency upgrades that have happened over the past year.

What's coming up this year is the 80th Street Bridge Rehabilitation Project, which is a huge, huge deal for us, and the State graciously is working with us regarding the interchange at 80th and Highway 61. So, what we were going to do initially is we were going to build 80th Street and fix 80th Street, and then within two years, the DOT was going to come in and shut down the bridge and the ramps for the bridge, to redo the ramps and do their work over there. So, this year, we're doing it together, and actually, we're bidding the project together, so we're working for a better price, obviously, so, that's pretty cool.

And then I know this is near and dear to our hearts, especially for our county commissioner, Local Affordable Housing Aid (LAHA) dollars. We will be spending $916,000 and it's going towards Real Estate Equities, which does our Affordable Housing projects. We also have several other projects that are happening that are in queue for LAHA dollars. The one project that the $916,000 is for is a fairly significant apartment complex that's going on the corner of Hadley and 100th Street, and that is Real Estate Equities; they've been looking around our community for quite a while, and so we finally landed on this spot, and they were able to get a project going and were able to use some of those dollars in that great way.

So, again, we appreciate all the work that you guys have done over the past year. I also want to mention real quick there is a couple from our Economic Development department, and you'll meet Nate here in a minute; he can point out a couple funds that we really utilize in a great way in Cottage Grove, the Minnesota Investment Fund and also the Job Creation Fund. Both of those are being used and had support with DEED and others in order to continue to bring new business into Cottage Grove or help some of our existing businesses actually expand. I believe we're kind of working with them right now, as Van Meter is going to expand 100,000+ square feet, and

we're working with them on some additional funding opportunities for them as they create additional jobs in Cottage Grove.

So, tonight you're going to hear our Top Five Legislative Priorities:

1) The County 19A and 100th Street Realignment, and I think we're all aware of that project.
2) A big one that we're dealing with and have been talking about is providing funding for Emergency Medical Service (EMS) Aid for ambulance services within our community.
3) The Mississippi Dunes Park development, and I think Zac will be talking about that.
4) Operations and Management of the PFAS Treatment within the City of Cottage Grove, and I know this is greater than just Cottage Grove. We obviously have one of our plants in and running. Right now, we're doing construction of the big one, which is behind our fire station on 80th Street. Then the next step, of course, once they're up and running, is paying for running it, so that's kind of a big challenge.
5) Also, preemptive Land Use and Zoning, that sounds like it might be rearing its ugly head again this year, and so we want to talk about obviously how that affects the community of Cottage Grove.

So, I think what I'll do is maybe I'll just start over here with you, Rick, and we'll just have you introduce yourself and whatever you'd like to say, I suppose you can talk about how many years you've been in the House.

I'm Rick Hansen, State Representative, and you know you can definitely feel the pace increasing as we get closer to the session. There's a lot more meetings like this, and a lot more people that want to talk to us. I think it's going to be a challenging year, you know, it's just that we've been through a hell of a year, in the last year, and so I think we're still essentially dealing with repercussions of everything that went on. And, so, I do think there are some glimmers of opportunity, particularly on smaller things that maybe we can get agreement on; it's still divided in the House equally and almost equally divided in the Senate. So, I do believe there will be a Bonding Bill. I think there's enough energy for that and a backlog with local projects. I think the key that we need to hear from people and the electeds at the Capitol need to hear is last year we were told that that would be the executive priorities, this year would be local priorities. We'll see the executives' proposal, and it's all executives doing it, so, we need local involvement. And, so, I think that's important to hear, all of us to hear that, and our budget can be proposed and then we're just focused. I think there will be a Bonding Bill. I think tweaking things, small changes, small reforms, and I'm not talking about the big issues here, I just mean little things that maybe are a 20-or-30-year-old law that we can find bipartisan agreement on updating. And then just I think the dominant thing is going to be what's going on in the world around us and the reaction to that. I'm really not sure how or where we'll find common ground on that, so. There are bills being put in the hopper in the House already, and those will be posted. I put the first one in the hopper, it should be the first one, at least on the Democratic side of the House, it's design and predesign for some incentive in St. Paul Park along Highway 61; and, so, that's a design and predesign, I'm sure there'll be plenty of testimony from the County on that but, you know you've got to start the ball somewhere, and that's kind of the idea, to design and predesign, then we come back for the projects. So, that will be introduced. I think there's still, when I was getting that drafted, I was told that the Bonding Revisors were a week behind already because people were working on Bonding Bills and people have requested all of this money. So, I think demand will be high. And if I can jump ahead just on PFAS, on March 3rd, we will be having, a Bonding Hearing. Representative Franson and I attended a conference in Southdale, Indiana, where we heard some PFAS presentations there. So, we'll be hearing about that and probably an update on current money and things like that, so that we can have the groundwork laid for whatever happens during the bonding. So, I think there'll be a bipartisan effort. Representative Hanson and I have proposed a fee on plastic water bottles and building a trust to pay for drinking water and PFAS. One bipartisan bill, and I think there's a couple others that could go on that because it's beaucoup money, and it's what we need to have. We've got a long, long time in life without PFAS for 20-to-30 years, and we can pay for this. So, that's what's happening on our side.

Mayor Bailey said all right, thank you.

Representative Dippel said I'm going to keep it a lot shorter. I agree the PFAS issue is a huge issue, and local projects are also a huge issue, too. And having voted for the Bonding Bill last time around, I think this session is

going to be just as important, and I hope to see some good projects in that and continue to push forward, and work for our District in whatever way I can.

Jennifer Levitt, City Administrator. I'm excited that there's optimism about a Bonding Bill, as that would be helpful.

Dave Clausen, I'm just starting my second year on the Cottage Grove City Council, and I'm learning a lot.

Justin Olsen, I'm still learning a lot, and I've been around a little longer than Dave. There's one thing that I'm eager to chat about tonight, and I'm sure it comes as no surprise to many of you, the EMS Funding. Boy, getting some help here a couple years ago was a big deal, and it really pushed us forward but, unfortunately, the gap seems to be as large as ever. So, anything that we can get some help with would certainly be appreciated, and if we do something like, I don't know, a State Ambulance Bill or something, Karla? Commissioner Bigham replied yep. Council Member Olsen said it would help pay for some lost revenue. Yeah, all right, with that, back to you, Mayor. Mayor Bailey said I'll jump to Monique.

Hi guys, I finally get around to saying hello to all of you. Monique Garza, City Council. I'm excited that there is some optimism when we're dealing with PFAS. All things, at least the little things, we're a small City, so small things or a little, it helps a lot. With the PFAS, a documentary was released earlier today, and that was really, really eye opening, so I would love to hear more about that and what the County does because we need more, more, more, that's why I'm asking that, right? We want more. Thank you.

Washington County Commissioner Karla Bigham. I just appreciate being included in this meeting. I think the relationship between the Cities and the County and the State is really important, and just really appreciate the collaboration, especially on our infrastructure projects. And I guess we're going to be adding the Highway 61 and 70th Street overpass onto that collaboration over there. And, so, it's an important year, and I think with a Bonding Bill, it would go a long way if you look at, and I'm not getting in the weeds too much, but the second lowest GDP, North Dakota's below us out of 50 states, or 48. Manufacturing is taking a hit, and so a Jobs Bill is very needed, and also some help in the agriculture area. And, so, that would be great to be able to get a Bonding Bill, and if there's anything else I can help with, or provide data for, or answer questions, then I am available.

Wayne Johnson said thank you, I'm the Representative of 41A, which is the north part of Cottage Grove. And, so, which is, I don't know, I was just trying to think back between, it seems like I've been here so many years now; even though I'm only in my second year as being a House Rep, but I've been here with the City, you know, sitting there, I've been with the County, sitting there, and now I'm sitting here. So, I always enjoy these. I am in agreement with starting off right away, this is hopefully a good sign of the way the session's going to go. I'm in agreement with Rep. Hansen and that's we do need a Bonding Bill. We pushed so many projects from last year, saying, well, we'll take care of it next year, and we know one of those was one that I was fighting really hard to get. And, so, I was like okay, we're going to get it done, but then when you look, there's $6 billion in possible projects out there that they figured we've gotten up to. They were talking, people were talking about a billion dollars, doing a Bonding, but then when the governor comes out and says I want $970 million of that, it was kind of like, oh, man, here we go. So, I mean, I'm doing the best I can. I'm hopeful, I know both sides want it, I just hope a lot of the other issues that we're going to be dealing with doesn't prevent it, and we don't end up at the end of the session saying, well, gees, we just ran out of time. I think that would be terrible. I hope we have enough people there with enough realization and common sense that we have to get something done for our communities. We can't just keep going to $6, to $7, to $8, to $9 billion dollars, as we get that far behind, because you're talking about, you know, businesses are looking at us not getting things done. And I just sat down this morning with the Minnesota Chamber of Commerce, and they gave a report of where Minnesota is, we're still good, but we're falling behind, and a lot of that is because we're lacking in what we need to do. Look at the project down on 19 and 100th now, and how important that is for Cottage Grove. So, looking forward to getting in session. Hopefully my big, top thing is going to be Bonding, and then dealing with some water issues for Lake Elmo. So, hopefully we can get it all done and get moving forward. Thank you.

Senator Judy Seeburger. I did have a nice conversation with Mark **Roth** earlier, that's why I was late, it was on the PFAS issue. That's something that's important to all, up and down the District, but particularly in Cottage Grove. Cottage Grove was featured fairly heavily in that film, so it's certainly front of mind for the residents of Cottage Grove with PFAS and the treatment plants and then the costs incurred of running it. I think that's the piece that people forget, we can build it, but then you've got to run it. So, hopefully, I'm hearing all this talk about support for Bonding dollars, obviously I support it, have supported it. We haven't been able to get one done for the last couple sessions, so that would be great. I'm looking forward to hearing more about what's on your docket.

Mayor Bailey said very good.

I'm Ellie Tibodeau-Lissick, I'm Senator Klein's CLA. So, if you have any questions or concerns, or anything you'd like him to know, just let me know, and I will get that all scheduled out for you. Unfortunately, he's not able to be here today.

Mayor Bailey said sounds good. Council Member Olsen said well, thank you for coming here. Ellie replied yeah, of course.

Mayor Bailey asked Ryan, do you want to start and we'll circle around?

- Ryan Burfeind, I'm the Public Works Director for the City.
- Zac Dockter, Parks and Recreation Director for the City.
- Brenda Malinowski, Finance Director for the City.
- Emily Schmitz, the Community Development Director for the City.
- Pete Koerner, Director of Public Safety.
- Phil Jents, Communications Manager.
- Nate Carlson, Economic Development Manager.
- Paul Sponholz, City Engineer.

Mayor Bailey said there you go, thank you. Oh, and then Bonnie.

Bonnie Matter, resident. Mayor Bailey said Bonnie likes to, she shows up and likes to listen. Bonnie said that's actually the key. Mayor Bailey replied there you go.

Mayor Bailey said and I will mention, you'll notice we're short one Council Member tonight; Dave Thiede is out of town on business, so was not able to be here tonight. So, he did send his appreciation to all of you for being here.

Mayor Bailey said one thing I'll say real quick, and then I'm going to kick it over to Ryan. So, a lot of the things that we were just talking about are actually in this booklet that you have. So, what I'm going to do is you'll see at the very beginning it talks about our priorities from 1 through 5, if you will, from the City's perspective. And, so, what I thought I would do is right off the bat, and then if there's any questions throughout this, either from the Council, staff, or any of our legislative officials, please let us know. So, Ryan, I'll kick it off to you to get the ball rolling.

Director Burfeind said mayor, so first on the docket tonight is the County 19A and 100th Street Realignment Project. Similar to 2025, one of Cottage Grove's top priorities is supporting Washington County for their request of $22.5 million for design and construction of this very important roadway. This is across the southern part of Cottage Grove. Right now, we're pretty underserved for access to the southern part of Cottage Grove, and that's where our growing Business Park is, among other residential developments, including Affordable Housing. So, this is a key project to provide that County arterial route and connection to Highway 61. It is a project, not only in partnership with Washington County but also MnDOT with that connection, and really 3M, they're the mainland donor that we need our Right-of-Way acquisition from. And then really it was for surrounding communities that the County did the original arterial study and how we could get access to the southwest part of town in Washington County.

Real quickly, I just want to talk about the funding and what this roadway looks like. You can see an image on the screen of that connection, starting over here at 100th Street and Jamaica Avenue, and near Renewal by Andersen,

a new direct route, and the key is that grade-separated railroad crossing over the CPKC bridge, ending over at Highway 61. From a funding perspective, it's been City and County going aggressively after State and Federal grant funds. On the left is all the buckets of money we've applied for, the bold are the ones that we have received. On the right, that Total Project Cost is $47 million. That bridge is just such a costly endeavor to not only get it over the railroad tracks, but there's major transmission lines in this area, a gas transmission line, and the Met Council interceptor sewer runs right through there as well. So, we have a lot of infrastructure to cross with that bridge. You can see the breakdown of funds between the City and County and our CIPs, and we have that $13.6 million. We have a really important clock: Initially, we had a 2027 timeframe that we had to start using those funds, so we're trying to really work aggressively with Washington County. There was some hope to maybe push back the required start date, but I'm not sure where all that stands today, so we've really got to start this project here next year, and then the Bonding Request would finish that out at $22.5 million so we can deliver this project.

Director Burfeind said with that, any questions?

Representative Johnson said I might as well kick it off. Thank you for the presentation, and I think I forgot to say this at the beginning, but thank you for that wonderful meal that comes with this.

Mayor Bailey replied that was River Oaks, by the way.

Representative Johnson said the first thing is, what defines start? In other words, how deep do you have to get to say you've started the project?

Director Burfeind replied yes, good question, Representative, probably Bid Letting and having the project under contract is the key to get this project moving and meet those requirements of the grant.

Representative Johnson asked so, there isn't a situation where you just get started and say you've done design, and that design, that says our start point, and then you can wait? I'm just wondering, you know, if things fall apart for bonding, how long do you have without losing the Federal and State grants? How long with that?

Director Burfeind replied one thing that County is working on is to see if they can work to get some additional years on that, but even just the amount of growth we've seen in that area is kind of driving the need for this project. So, we're working between City and County, are there other options to deliver it in phases? Because we do not want to lose that Federal and State funding.

Representative Johnson said these are questions that are probably going to come up when we're talking about the bonding down there. Now, the numbers you're using here, are you using 2027 forecasted numbers then?

Director Burfeind replied that's correct, yep, we've got escalations built in for the future costs.

Representative Johnson replied okay, thank you.

Commissioner Bigham said just something to add, mayor: In December we added, because it's part of the State Statute when we were allowed to utilize our County Sales Tax, we have to declare which projects we're using, and they cannot qualify for CASA. And, so, this was added, it was about a two-year process to get it added to be able to use the Sales Tax that we generate over a year, where 50% is transit, 50% is road. And then yesterday, during our workshop, there was support, and I've talked to the mayor about this, and I led it that we need to move off of the 50-50; and we need to look at putting it towards roads because of this, because of Bailey down by Newport, into Woodbury, and then Manning, by Oakland Middle School. They're each $50 million projects, and we don't, we pay as we go, we don't bond for our road projects. So, unless we get help with the $22 million, we've literally done every option that we have from a County perspective to put County resources towards it that qualify. The Feds have done stuff, and so, hopefully, we can come through with the $22 million this year from the State.

Representative Johnson asked would you say it's tapped out as far as all the other possibilities, as far as getting money from somewhere?

Director Burfeind replied I would say so. We are going for one additional grant, a BUILD grant, this year, and that will be submitted, but you can see on the left, I think we've really looked under every rug, bed, mattress, what have you. We really tried our best, it's been aggressive with the County and City both, but we are definitely running out of options.

Representative Johnson said okay, thank you.

Mayor Bailey said the only other thing I just want to mention is on 80th, and I'll just say this up front: On 80th, for the requests that we're doing, if you need us (whether it's myself, Ryan, Pete, or whoever) to come up and testify

on behalf of whatever these subjects are, please don't ask now, I'm more than happy to, and I'm saying it can be on any of these projects for the things that we're listing as a priority.

The second thing, and Ryan, you did touch on it, the complaints I'm starting to get right now from a citizen standpoint is how bad the traffic is around the two roundabouts off of Jamaica and 61. Because everything is filtering, and like when Renewal by Andersen lets out, Up North lets out, it's tough. And at the same time, in the morning, I have seen this, I couldn't believe it but traffic is now backing up onto 61, and I know that's a huge issue for the DOT. And, so, that's why we added this other access point, it will definitely help with getting traffic moved out of those roundabouts. And, second, this whole project here, and I know we talk about the local opportunity for growth and tax base and all that and jobs, but it's really getting to be a State kind of thing. 3M is, other than working with us on this road, 3M for the first time ever is literally going to work to sell all their property in this area. What that means is new jobs, new buildings, we don't even send them anybody anymore because they've got their own list of who's going to come there. It's like it's ready, so that's why this is so important for us is because we know there's going to be job creation, a bigger tax base going in this area here, because of what 3M has shared with us.

Commissioner Bigham said and mayor, back to Jamaica and 61 real quick, and Jennifer would know this, I believe that was the first roundabout in the County. The whole point of us doing that roundabout was because every afternoon, I'd come home on the bus, and it would be backed up over to 61, and I would email Ryan Schroeder and Jennifer at the time, because she was the Engineer, saying hey, this is not safe, we can't do this. Their response was we're going to put in a roundabout, it was the first one, and that was over 20 years ago, so the capacity is shot now, with the growth. So, we do need to do this.

Representative Johnson said and I think it just, last year, I felt it was really close to getting something, and it just seemed like an example of again, we just ran out of time, a last-minute scramble and no, we're going to do it here. So, I just, I know it's on the top of their, Mary knows that it's there, you've been down there, and she and Rep. Franson, so they know that I'm going to be all over about this. So, I just felt we were so close, and that was what's so angering last time, in my first year. You know, you've seen this happen year after year, but in my first year, it's like oh, we're so close, and to see that final list come out, and it's like, sorry, we ran out of time. So, I think there's a good shot at this again.

Mayor Bailey said okay, thank you; Representative Johnson said otherwise I'll have Karla come down, and then we know what happens then.

Director Burfeind said if there aren't any other questions, I'll turn it over to Director Koerner.

Director Koerner said all right, well, Good Evening. I am talking to the experts, I will admit, on this topic. You guys are well aware that Medicare-Medicaid reimbursements have failed. I'm trying to say it nicely, but it's getting worse and worse. And one of those other bullet points is we do not see the Federal government stepping in to help with this at all. So, I think it was 2024, the EMS Funding came out. Unfortunately, it was geared more towards outstate, and I know the closest it came to us was Hastings ended up with about $141,000, is what I saw. So, we have talked about this subject forever, right, Judy?

Senator Seeburger replied, oh, yeah.

Director Koerner said I know you're very familiar with that. So, but this is probably I think, as Council Member Olsen had said before, one of our biggest asks, and it looks like there's some more funding in the works, but to maybe make sure you include the metro ones, too. This is on the top of the State Fire Chiefs' agenda because EMS, for all of the groups, this is a really scary thing with the lack of funding that's received. Any questions? And I know I'm preaching to the choir on this one, so.

Senator Seeburger asked how have things gone? I know you kind of reached out to your neighboring communities. I'm seeing your faces.

Council Member Olsen replied not well.

Mayor Bailey said so, we're, I'm just not going, I won't go into the details of that. We are making some decisions and working towards a solution for Cottage Grove. Senator Seeburger said got it. Mayor Bailey said I'll just say it in that way.

Council Member Olsen said but it's difficult for me to understand, personally, and I heard this same argument since I first started on the Council in 2008 and even before then, as part of the Public Safety Health and Welfare Commission, is certain communities get a fairly nice chunk of Local Government Aid (LGA) each year. And that Aid, statutorily, is intended for required services, mandatory services. And I don't know if this falls into that bucket, but it certainly seems like it's an important enough service where you would take a miniscule portion of your LGA and dedicate it to ensuring your residents have ALS care, right? We're right there, right now, without waiting for another ambulance from another potential end user who's 20 minutes away, but that doesn't seem to resonate with some of the leaders in the neighboring communities, for whatever reason. So, unfortunately, I think we're going to get pushed into a corner where a lot of hard decisions are going to be made, and with the way that the economics work at the moment, it's pretty tough. I mean, we're going to have to make more than one hard decision. So, again, anything we can do to get some help from our State and Federal friends would sure be nice. And when you guys came through with, I think, what did we get, Pete, $127,000?

Director Koerner replied, yeah, the Public Safety Aid? Yeah.

Council Member Olsen said yeah, when you guys came through with that, that was a life saver. And you know, you came to the HERO Center, you had the big forum, everybody came, and I know you live it in your life as well, but maybe you could talk to some of your friends, we need some support.

Mayor Bailey said just to piggyback real quick on that, too, is when was it, our last meeting, we just ordered a new ambulance?

Administrator Levitt said it's on tonight's. Mayor Bailey said, oh, it is tonight.

Director Koerner said the larger one just showed up this week, we just took possession, yeah.

Mayor Bailey said so, we just ordered a new ambulance, which was just the ambulance, not the stuff inside, $300,000 right off the bat. Oh, by the way, two years to get it. So, we can't even get, we won't get this new ambulance; so, heaven forbid, which has happened to us a couple years back where we had an ambulance get in a crash, and we were down to like one, and we were trying to find a generic one to help as a backup. So, it just, it's a, of all the things that I've had to deal with as mayor, this seems to be the most challenging one, honestly, and frustrating at the same time. But there's nothing we can do, other than make some really, really tough decisions that are going to not be liked by everybody.

Council Member Olsen said and you guys know agencies are closing because they can't bridge the gap anymore. They just can't do it, so.

Representative Johnson asked is this going to be your third one, then? Mayor Bailey replied this will be our third.

Representative Johnson said so, you're not replacing one, you're actually putting a third one into service? Council Member Olsen replied it will be a replacement.

Mayor Bailey said but going forward, because of the call volume, and we did a Standards of Coverage, by the way, which we shared with our neighboring communities. It covers everything from response times to whatever; and we're at that point where we know we have to literally man two ambulances pretty much all the time. As a matter of fact, some of us had the chance to actually firsthand, when we were learning Firefighter Management stuff, work at the Central Fire Station. While we were there, two calls came in, one after the other, so we had no coverage, and if there was a fire or something else, we saw that. While there, I pulled hoses, and it wasn't the greatest, but the point of the matter is, yeah, it's pretty tough. We are looking in the evening to increase our EMS, the number of people that we have on board, we put a plan together, and we had a chiefs planning workshop for the next few years to help build it up; so we can get to where we have two fully-run EMS Advanced Life Support (ALS) at all times in our community, and somebody will still be at the Fire Department in case of fire. I mean, if this is happening everywhere, with the size of Cottage Grove, nothing is worse than some of the communities we're hearing that from, yeah.

Representative Johnson asked how far off are you from needing a third ambulance? Administrator Levitt replied about three-or-four years. Representative Johnson asked about 20 years? Administrator Levitt replied four.

Representative Johnson asked four years? Council Member Olsen said yeah, for a fulltime rotation. Mayor Bailey said so right about when we get the third new one, yes.

Director Koerner said I love it, you guys are getting, you know, I don't even have to say anything anymore. Fire's, they've trained you guys well.

Council Member Garza said it's a good thing that Wayne got to witness it firsthand, to see how that worked out; Council Member Olsen replied yeah.

Representative Johnson said yeah, and I've talked to other communities, too, and they're, you're right, you're not alone in it, trying to, especially when you start dealing with the response times, and you have to deal with ALS and all of that stuff. So, it's, and as they say, with the community needs, it's nice to have some of this senior housing here, but I also hear how much they actually take of that, and I shared that with somebody else. I was just talking about that and they were talking about senior housing is great. I said yeah, they're great, you get to go from cradle to grave, but do you understand the strain on the infrastructure it creates? And they're like no, we had no idea, you know? So, misery loves company, I guess, but at least you can't, nobody can accuse you of saying it's, it's a Cottage Grove problem.

Mayor Bailey replied no, it's not; Council Member Olsen said and they're also dealing with it in South St. Paul.

Representative Hansen said and I think that, you know, the challenge here is we get a forecast in about a month on, you know, where the money's at, and will all these things that are happening have an impact on the economy? We've got to be aware of that, and I think the test will be, you know, do we have to have a supplemental forecast? And mainly because of impacts on revenue and spending. When Medicaid cuts come in, we literally have hospitals closing. I mean, these things are, and when you start to get into this, talking about these things like we do, it's one thing after the other. So, I don't know where, we're going to have a lot of things that are going to have hard decisions, it happens all the time. And, so, I don't know what happens with reform or restructuring here, you know? Obviously, the world we've lived in, we always had adequate funding and it was awesome, just know the squeaking was loudest. And, at some point, it's not a zero something, it's a significant amount of support. So, I know I didn't do that Buckle Up because, you know, we talked earlier about a Bonding Bill; if we start seeing the Sales Tax revenue and Income Tax revenue go down, then we have to have increases for Public Safety for the response events.

Council Member Olsen said well, we're already seeing, when we did our budget last year, the impact in tariffs on our construction projects.

Council Member Garza said the ambulance funding, you know, Cottage Grove needs that.

Council Member Olsen asked are you all hearing anything as it relates to Local Options Sales Tax? I know that there was talk about putting an end to that. Has that gone any further, or is that still going to be something that folks have an option to pursue?

Representative Johnson replied I think there's a, there is basically, I think, the flavor I got is that the elimination of it and not allowing it. I think just because I think it was meant for one purpose, and then I think it just got looser and looser because they kept saying yep, go ahead, yep, go ahead, and then everybody just started putting it in. So, I think what happened is it's backfiring. And now they're like no, we're losing the interest on that, from what I could get from the Tax Committee.

Mayor Bailey said all right, Zac, Mississippi Dunes.

Director Dockter said Mississippi Dunes. It's my 26th year with the City, and for all 26 of those years and then even prior, we've had the same conversation about the Mississippi Dunes in Cottage Grove. We have more shoreline than darn near anybody in the State of Minnesota, and we have almost no access to it for our citizens. So, luckily, here we're able to collaborate with Washington County and the State of Minnesota and the City of Cottage Grove on this awesome piece of property called Mississippi Dunes, that's the old golf course, so it has 33 acres of land. But we need some money to help develop this, so the City can make it. So, really what I want our friends to know tonight is that we are applying for almost any and everything possible to try to build out this park so we can get people down to the river. So, we've applied for the 3M PFAS Settlement dollars, and we're going for

LCCMR money. We've already got an award for an Outdoor Recreation Grant from the CPO, and then we also received a CPO grant, a Conservation Partners grant, and then we have already applied for the State Department grant. So, I guess my biggest ask is that as you're walking the halls of the capitol is to just remind your friends that this is not just any park, this is different; the ecological, and historical, and cultural significance of this thing is extremely important, not just to Cottage Grove, but the entire region. Its next to the Grey Cloud SNA, its got historical Native American cultural aspects to it. So, there's just a lot going on here, and obviously, we want people to get out there and enjoy the river. Tom gets to enjoy the river, but many people do not.

Representative Dippel replied every day, I know. I'll come visit you and have a picnic with you. Zac said come on down, everybody's welcome, any time.

Director Dockter said so, we want to get more people down to the river, and again, not just Cottage Grove residents, because this is a regional trophy, right? So, again, we're just hoping that you'll support it where we see people that might be involved, with legislators that might be involved with those projects, maybe say a good word and make sure that this project, people know this project is different. Any questions? None were asked.

Mayor Bailey thanked Zac.

Director Burfeind said one more topic for me tonight, we talked about this one last year as well, and that is just keeping kind of front of mind that it needs a transition from the current 3M Settlement in 2007, a Consent Order for PFAS treatment. It was 2024 when the co-trustees, PCA and DNR, kind of raised that red flag that the first Settlement would be fully obligated; that timeframe has kind of changed over the years with interest and such in the way it's been spent, but something in that 2027 and 2028 timeframe is what it continues to sound like, or potentially sooner, depending on how the projects come in. So, we're continually grateful in Cottage Grove for the funding, for the capital to build these plants because it's a major item to have in our town with the two treatment plants. But looking at over $2 million annually to operate these plants and our annual water budget right now is $2.17 million; so, just kind of doing the math, you can see the only way for the City to pay for this is with extremely aggressive rate increases. And because we really don't know what this looks like after 2028, we've already started to implement this, we have a plan, working with the Finance Department to kind of step into this if we had to take them over, because those are daily costs, monthly costs. If we have to take them over for O&M, we have to be prepared to do that. So, we're just asking for our legislators' support and just kind of moving that along, especially with the mediation continuing to happen with 3M and the co-trustees. Any questions? None were asked. Director Burfeind said all right, next, I'll turn it over to Emily.

Director Schmitz said Good Evening, Legislators. This evening I will reiterate what the mayor had indicated earlier and our appreciation for your continuing support to maintain Local Land Use and Zoning Control, as we've heard this might be a discussion again. This year we wanted to make sure that we are talking through our concern, just from a Cottage Grove perspective, that we share with a lot of other cities, who are running into that concern, where this might impact some decisions that we're able to make and really the landscape that's created out there. We in Cottage Grove really take to heart making sure that we're implementing standards on Land Use and Zoning Codes that do allow for that affordability of housing and diversity of housing, and we take pride in that. We will continue to do that moving forward. Opening up these broad standards to cover multiple different communities, we're all unique, and that makes a difference; but as we think about our fees hiked and navigating those, that really changes the landscape of our community because it's so important for us to continue to maintain that at the local level. But, most importantly, as we start to think about the potential for high density to be allowed in maybe our industrial or our commercial areas, our infrastructure wasn't planned or installed to support that kind of density in those particular areas. So, if you think about that cost, it makes us I want to say anxious, to be kind, I guess, to what that might look like as a City, as an organization, and more specifically, to our taxpayers. So, we want to stress this certainly isn't going to support our drive for affordability. I think we're looking in the wrong bucket, so continuing to hope for your support in keeping the Local Standards here in Cottage Grove.

Administrator Levitt asked mayor, did you want to say anything on the Local Zoning?

Mayor Bailey replied yeah, I mean, other than I'll give you an example of local control, I mean, that's the best. I mean, we're at the ground level with our communities, and each community is different. And if I would say anything about Cottage Grove, and this isn't just me and my Council, but it's our staff, and we're all about

affordability, making sure, as it was just said, we are already going into the LAHA dollars, providing options out there. And whether it's a full apartment complex, like the one that we're talking about, or it's even hey, we're going to get some additional spaces over here, or what's the one by the library? Director Schmitz replied Bluestem. Mayor Bailey said Bluestem, which is the deeply affordable senior facility. Other communities, I love to say this, is Karla had called me and said, hey, Oakdale doesn't want the money, and I said we'll take it, when it was coming due. Because we said, we'll take it, we want it, we want to provide our seniors, that can't afford maybe some of the other senior facilities in Cottage Grove, with another option. And, believe me, I hear about it a lot from our seniors as the rates keep going up in some of these apartment complexes, so, I definitely want to be able to give them another option there.

So, the other thing, too, is there are certain communities like ours where we do things the way we do things because it makes it best for our community, and I'm going to give you an example: Plowing our streets. Our Public Works team is phenomenal in plowing our streets. Some of the information that you've been hearing out there is well, they want to take away the ability of cities to be able to have cars parked on the streets. And, so, they want cars out there. Well, that completely throws everything out the window when it comes to how are we going to plow our streets, right? Council Member Garza said like St. Paul. Mayor Bailey said yeah, and so, and that is what I'm saying. It's like in some cities, this will work, maybe? I don't know that it actually works in St. Paul, but it certainly isn't going to work here. And I can see, like if somebody, one of my neighbors next to me, I'm just going to use myself as an example, said hey, you know, I'm going to sell to this new developer, and they're going to build a duplex on the lot next to me. I am not going to be happy, nor will my neighbors around me be happy, because we bought our house knowing that we'd be surrounded by single family. If I bought my house next to a land or a development that has townhomes or twin homes or apartments, that makes sense, right? It's been planned. But to say we're going to put some of this stuff smack dab in the middle of a single-family residential just makes no sense to me. It might to somebody in Minneapolis or St. Paul, but it certainly doesn't make sense to us out in the suburbs. And then that also throws into the phrase how do you provide enough water and sewer and the infrastructure that you need?

Commissioner Bigham said so, for 20 years, we've played good cop, bad cop. So, here comes bad cop: I'm really sick and tired of the legislature passing stuff and then not giving us enough time to really see the benefits of it. They tried to steal our portion of our Sales Tax for transit that they had just enacted and allowed us to start collecting, like four months before, because a bunch of House members didn't realize like we didn't build Taj Mahals everywhere in five months of being able to get the money. LAHA is the same thing. So, I just ask the legislature chill the beef out and let us build this stuff up, let us do what you want to do, and what we all want to do on behalf of our residents, before we start throwing and getting rid of Zoning laws and stealing Sales Tax money. However, I want to say thank you to everybody in this room for fighting to make sure that our Sales Tax money stays where it's supposed to.

Representative Johnson said I feel happy that I was on your side, I really am. Commissioner Bigham replied, I ended nicely.

Council Member Olsen said I'll mention that I sit on the Board for Metro Cities, which the mayor formerly sat on, and this topic is front and center every conversation. Every time we have a meeting, I have yet to have one of my colleagues on the Board say, you know, I don't think that it'd be a great idea if we lost it. No, this is not happening. So, if indeed this does rear its ugly head again this session, I would expect you're going to see a lot of lobbying on behalf of Metro Cities members and probably a lot of other folks saying, hey, look, let's just cool it with this. Can we be done with it now, maybe? We've been fighting this battle for a while, and I know there's a House member in Woodbury who thinks that it's a great idea, the 3M Land Use and Zoning. Clearly, I won't agree with that.

Senator Seeburger asked maybe she's in the Senate now?

Council Member Olsen replied oh, yeah, I forgot, but anyway, this is not a popular thing, so please help maintain the local control, that's all I'll say.

Representative Johnson said well, I can speak up. I'm on the Housing Committee, and so, and I have heard rumors that it's going to, we're not working on a budget this year, so we have to find something to do on the Housing Committee. Council Member Olsen replied figure it out.

Representative Johnson said so, it is going to come up again, you know where my feelings are going to be. It is going to come up again, from my understanding from our favorite Representative from the Shakopee side, to try to take the Sales Tax away again, which baffles me. But and what the problem is, is you have lobbyists coming in, Housing First is one of them, that just says we can get Affordable Housing if we could just get the cities to loosen up and allow us to put in what we want to put in, and all that stuff. And that's basically what's happening, and it's, unfortunately, some people are going with it, some people are supporting it, that I just shake my head. It's like why are you supporting it? Because I know your community isn't supporting it.

Council Member Olsen said correct.

Representative Johnson said and, so, that will be a battle. You will have to be very vocal with your people again, if it's even coming down and speaking of it, because you're right. People move to a community because they like what the community's doing. And then as soon as you move to that community, all of a sudden that community can no longer be that community because somebody else is, from another part, whether it's in the inner ring or whether it's out in the outstate, is deciding that you should be able to put cars on the street and stuff like that. So, it is going to come up in the end, I will definitely fight for it again. I know there's a number of people that are in the same boat as you that are not going to support it, but just be prepared to have that fight again as we go.

Council Member Olsen said well, we know who is targeted. I mean, we're talking about it in our subcommittees, like these are the people who need to go with it.

Senator Seeburger said but the senate isn't a place of reason on that.

Council Member Olsen said you've been on the other side from day one, it's appreciated very much, and Mayor Bailey said thank you, yes.

Representative Johnson said it's weird to say the senate isn't a place of reason.

Representative Hansen said on that Sales Tax thing, I think that's, I'll go back to what I mentioned earlier about the budget. So, any pot of money in different areas becomes a target, and some people when they don't get what they want, they come back again and again. So, I think it might be the affected localities who should probably prepare for that read again. You know, there wasn't even a Bill, it was just a concept of a plan that was put in in a Conference Committee, for one thing, and it wasn't.

Commissioner Bigham said and in a special session.

Representative Hansen said in a special, and nothing ever in writing. Commissioner Bigham said correct. He said and I think that is something that local governments could talk about in terms of the public media. Watch out because there's not even a Bill, and I doubt if there will be a Bill; and I think that people want to get into these Conference Committees and then they feel they can just do what they want to do, and I'm speaking of them. But this was an extreme amount of effort to get that to stop, and people are mad, and I think they'll come back and particularly some that are leaving, because they want presents on their way out the door. So, I think it's a very serious threat, and it's a lot of money at risk. When you start, there's only a few of us who've been through on our way to a solution. And that is, you know, when we start coming back and cutting and cutting and cutting.

Council Member Olsen said believe me, we had to do it here.

Representative Hansen said it's just not, you know, the first thing that goes is anything that hasn't been encumbered. So, if you've got anything that hasn't been encumbered, like given contracts, that's easy, that's the easiest stuff. Then you've got stuff that, you know, is the obvious to try to do. So, I just, it's going to be a strange year. Again, and this is separate, I think all this could happen, and we could still get a Bonding Bill.

Council Member Olsen said yeah, then it gets messy.

Administrator Levitt said I think the other pot of money that we're concerned about is the continued health insurance for duty-disabled police and fire. Because we wrangled, too, in the last few years to just get about $75,000 to help offset that burden. The problem is how do you even manage for 2026? And so, that's a pot of money that could be used to pay that amount, so we're asking. And, so, that burden, it just shifts down to the local government to provide the health insurance for the fire and police. So, I mean, $75,000 doesn't sound like a lot, but it adds up in our budgets.

Administrator Levitt said the other thing, just to remind you of, is we would love to see a Statewide Licensing System for massage therapists. That's one of those low-hanging, easy fruit, if you can pick that one. Obviously, we

don't want to have to talk about sex trafficking, which we have, but we spend a lot of time ensuring the therapists that are operating in our community are all licensed. So, it's just something to think about.

Representative Johnson said I was surprised how hard, how much people were against it. It's nonsense, it's like do you understand? And the people that, I don't know the age, felt it took away the opportunity of some and stuff like that, but I was just like yeah, but can you understand why? And, so, it's just, I don't know. That one was like, that one was baffling, I don't know if in the Senate, how the Bill ended there, but it was coming. Maybe it's because I came up understanding it and why it was important, so.

Administrator Levitt said you license people who cut your hair, right, statewide? Mayor Bailey said I know, that's the main thing. Representative Johnson said I think I went to an unlicensed person once and never again. Mayor Bailey said you can be the example.

Director Dockter said okay, a future Regional Trail along Highway 61. I was talking with Representatives Hansen and Dippel just about the unique 61 Corridor that runs through Cottage Grove that most people don't appreciate unless they live here and experience it, right? So, the County has done an amazing job, they've got the Central Greenway Corridor that runs from Lake Elmo Regional Park all the way down to Cottage Grove Regional Park, right here. And then there's another Point Douglas Regional Park that runs from right on Highway 61 in Hastings over to the confluence with the Mississippi and the St. Croix River, but there's a gap along 61. So we're really just trying to hope that the State and the County and the City can get together and start by Master Planning to make sure that anytime we are talking construction or planning along Highway 61, that we're thinking about a future Regional Trail; whether that's giving Right-of-Way access or constructing parts of the trail or whatever it is, but we really have to get that planning in place. So, that every time a conversation comes up about Highway 61, we're saying what about the future Regional Trail? Because if we can get a Regional Trail that runs from the confluence of the St. Croix and Mississippi River, all the way up to Lake Elmo Regional Park, that's a gamechanger for people; that's a 20-mile stretch that is a regional draw, and people will come from miles and miles and miles to experience that corridor. Just again, anytime you're talking about Highway 61, please remember to mention the Regional Trail in your future conversations.

Representative Johnson said real quick, back to that other one, how much do you pay in the newspaper for a newspaper putting in the bulk of your announcements?

Administrator Levitt replied that ranges between, it varies on the timing of it and how many we're doing.

Representative Johnson said, so, on a yearly basis, how much?

Administrator Levitt replied, selectively, I'm saying $60,000.

Representative Johnson said okay, is it, this is really just a budget item, or is it getting harder and harder to find? What paper do you put it in right now?

Administrator Levitt replied the Pioneer Press.

Representative Johnson said and I know now if you get the paper, it's nonstop announcements from cities and stuff.

Mayor Bailey said well, that's only because it's required, and also there's the requirement in there about circulation amount, too. So, like even our local Cottage Grove Bulletin, they hardly have barely enough circulation, so you can't really use them, or people have actually said let's use them and St. Paul, but then you just double your price.

Representative Johnson said so, okay, and you'd want to just put it on your website?

Administrator Levitt said it's the same when we do our bids and other projects, you know? I mean, everybody's looking for it electronically, they're not looking for it in newspapers.

Representative Johnson asked what does the County use?

Commissioner Bigham replied its the Stillwater Gazette in Stillwater. I would say also that it's the Rule Books that won't support that and bipartisan, probably because they're trending for that with very small papers. So, like The Timberjay and, well, I mean, Rochester is pretty big, but Willmar has a paper. None of their folks, and it was Jean Pelowski for years that singlehandedly made sure this never went through. And, so, because no one published daily, none of them published, so. We just don't want the local papers to die, but like.

Senator Hansen said it's your caucus problem.

Representative Johnson said and you're right, I mean, because on one side you're talking about we're losing local papers and we cannot get our information out, but it's just one more rule. And some of those papers are taking $60,000 or $70,000 away, it's a big hit.

Commissioner Bigham said yeah, but as Rick said, those are not DFL caucus members, so it would be, if you worked with your caucus to get this done, that would be helpful.

Representative Johnson replied no, I'm just explaining why, you know, I talk all the time about, but we don't have, technically, really have a paper out here to get out what we used to do for Notices for Elections and all that stuff, and this would be kind of like going the opposite direction of trying to put them out of business, but.

Commissioner Bigham said right, but putting them on the website I think is where more people would go, and then to renovate some of these forms, when we're looking at the government websites, like Washington County is.

Representative Johnson asked are you still on that?

Commissioner Bigham replied yes, it's taking forever. It would be much more, I think, effective in targeting for people looking for the information.

Representative Johnson replied okay, thank you.

Senator Seeburger said and I was sticker shocked yesterday when I purchased two papers, it was the Pioneer Press and the Stillwater Gazette, but they were $3 each.

Representative Johnson said oh, they're really getting up there, yeah.

Senator Seeburger said and they're tiny, and they're smaller than this, so.

Representative Hansen said it's what the free market's doing.

Representative Hansen said on trails, so, I think just to look forward, from 6 and 8 and 10 years, that the Legacy Amendment will be on the ballot. It has to be on the ballot in 2032, and some of the older stakeholders want to put it on the ballot before then with the exact same percentages. I think that that's the wrong idea. I think that it was a reasonable 25-year time limit on it, so that can reflect all the time it needs. I think the needs of the next 25 years will probably be Parks and Trails because that's what people use. And spending $200 million a year on buying land that people don't use, it gets them in Marshall County, where we're spending about $50 million a year on the Pheasants Forever, and now we're only at about $50,000. So, the more money we spend will be for the Parks and Trails and we'll have exponential growth. And, so, I just want to put this on your radar for the long run, that there will be people here that are going to want to lock in the status quo for another 25 years. But, for our constituents, it would mean that we could shift those percentages a bit more in the right direction.

Mayor Bailey said okay.

Director Schmitz said so, I will briefly expand on Commissioner Bigham, she mentioned obviously we need continued support for these programs that help support our diversity in housing in Cottage Grove. We struggle to score well on some funding opportunities just because of our transit, I'm going to call it transit situation, currently. Obviously, we've been planning in the future, but we appreciate obviously the continued support for the Housing Study that we completed just last year to continue that diversity housing in Cottage Grove.

And I'll turn it over to Nate of Economic Development.

Nate said I will be short as well. I'll reiterate that the 100th Street expansion is a major economic development project. Additionally, there's the preservation of the TIF Policy, as is, without any major changes to it that could impact existing projects. The mayor had referenced in his opening remarks that we continue to invest in the JCF because this is vital to retaining businesses and growing businesses. I've been working on not just one, but several opportunities to deploy those funds.

The second two points here, Cottage Grove has been in conversation with Data Center developers, and what's becoming very aware is the need for maybe review of a policy, primarily with the PUC and the backlog that's happening with potential projects. It's not making Cottage Grove very competitive on this when it comes to Data Center development.

And then piggybacking off of Data Center development, it's power in general, whether it's a Data Center or light manufacturing, deployment of power from Xcel is becoming particularly increasingly difficult. There's been some

more news on potential, I will call them development activities, specifically with industrial projects. Whatever we can do to really incentivize Xcel to start investing more in deployment of energy is critical for everyone.

Representative Johnson asked does Cottage Grove have land, still, for a Data Center?

Mayor Bailey replied oh, yeah.

Representative Johnson said at one of the meetings I had, which was very interesting, it was over on the West Side. One of the top two leading, #1 or #2, biggest developers of Data Centers is in Minnesota, but they don't build any in Minnesota; they build them everywhere else around the world and throughout the country. They've just kind of gotten away from Minnesota because of all the rules and regulations and the attitude with them. So, it's just interesting that should even be approached, you know, to build one right now that hasn't started some.

Representative Dippel said there's some ripples out there among the general population, that I'm not sure you're aware of, that are very anti-Data Center.

Mayor Bailey and Council Member Olsen said oh, yeah, we're also aware.

Representative Dippel said and it's not the energy and it's not the long term, it's the fear, and, so.

Representative Johnson asked it's the what?

Representative Dippel replied fear.

Mayor Bailey said fear of what it's going to do.

Commissioner Bigham said yeah, that they're retaining.

Representative Johnson said oh, interesting. I hadn't heard that.

Council Member Olsen said yeah, there's several cons to Data Centers for sure.

Representative Johnson replied well, they're going to get built. Texas is building them like crazy, every other state, not every state, but a lot of states are building them like crazy. So, if they don't get built here, they're going to go somewhere, but Elon's going to put them in space here one day.

Council Member Olsen said yeah, there's a lot of stuff that's going to get built, but I don't think we need to have one. That's a fact, you know, we haven't had an application yet.

Director Burfeind said one last time up here for me tonight, you can see a couple items on the screen. I'm just going to highlight the top one, which is that continued need for funding for Local Bridge Replacement programs. Cottage Grove recently put two bridges on the priority list: 1) You can see the top one, that's the 103rd Street bridge over 103rd Street, it's the BNSF Railroad Bridge. Even though it's a railroad bridge, it is our responsibility to deal with. You can see the low clearance, it's six feet lower than what it should be, and the geometry means that its not good from a safety perspective. 2) And, also, the Grey Cloud Trail Truss Bridge, that's going out to Lower Grey Cloud Island; its a one-lane bridge and frequently impacted by flooding and having to close it.

So, those are two bridges from a local perspective without local funding, and that would be truly beneficial, and both of these are on that Southwest Arterial Study Route as well.

Representative Johnson said they should be protected by historical purposes.

Director Burfeind replied, no, no, they actually got moved here, so there's no history there.

Representative Dippel said if there are any questions about that, I'm a pro. I mean, I've gone under it and crossed over that tens of thousands of times.

Director Malinowski said all right, Finance. It's my first time up here tonight, we have touched on that, touched on those a couple times. The first thing we're asking is not to divert aid that's in the State's budget; so, we say that Fire Aid, MSA, or those LAHA dollars, we rely on those. We balance the budget with those, and so we ask for those to not be diverted.

And then, secondly, restrictions on local government budgets; specifically, on the levy limit. We have local control here, we are definitely a growing community here in Cottage Grove, and with our levy limit, that would have consequences on the services that we provide to our community. Because we're all unique, each local government.

Sales Tax on local government budgets, specifically, the motor vehicle Sales Tax; currently, we appreciate that we get that exemption for our Fire vehicles and our Police vehicles that are marked, and we're asking for consideration that that be on all City vehicles. And then Sales Tax Exemption on all purchases; a significant amount

of our purchases are exempt from Sales Tax. However, some of our City operations are not exempt, specifically, our golf course.

Director Koerner said I get the feeling I'm always scheduled last, so I can keep it short and sweet, to get everyone out of here on time.

The first one we have on there, I never thought in my 34 years in law enforcement I'd be in front of you talking about eBikes and mobility things, but we support them. I mean, we're a recreation destination, so our Parks Commission said wow, they just boomed in the last couple years. So, I think the biggest ask from the Police agencies is we just want consistency, what the different rules are, you know, the same age; because these kids are buying $800 eBikes, and they're like, what do you mean I have to be 16 and have? You know, over in Woodbury, I can be this. So, you'll hear more and more from the Chiefs of Police Association on this, just because we've had some significant injuries on those, and you can see when its on social media, there's a lot of comments, pros and cons, to them.

K-12 Threat Assessments: We're going to keep bringing this up every year, and I appreciate Wayne Johnson's been working a lot with the School District and our threat people, too. But I think they are extremely important doing these threat assessments at the schools. And I just want one quick point that if you do have people you want to talk to, I have a phenomenal staff. Our Threat Assessment group was recognized by the Minnesota Department of Public Safety as a model for prevention of targeted violence, and I thought that was a pretty good accolade for our staff that does that.

Finally, this has been a gamechanger, our Multijurisdictional Co-Responder Program. We have a fulltime detective that's assigned in that area; we could definitely use and we're looking at a second. Our social worker that we have from Washington County, Janet, is phenomenal. Just to end with these numbers on that is with our clients, which is a few hundred, it's reduced our Calls for Service with them by 89%, Arrests are down 65%, and the big one is Hospitalizations are down 81%. So, that's a phenomenal program, so when you hear anything about the Co-Responder Program and just how we can work more with information sharing; right now, it's always with HIPAA and all of this, but we need to be able to communicate better with our different hospitals and different groups.

Council Member Olsen said and what we spend on that saves us, I mean. Director Koerner agreed with the amount that patrol officers aren't involved. Council Member Olsen said yeah, but we really haven't spent that much on this program, and it's not been around all that long.

Mayor Bailey said all right, and I noticed some of you were looking at pages, trying to apply the words. I'll tell you what our staff did on those, other than the Top 5 Priorities, was to give you just an overview of some of the other, I'll call it secondary, things that are important to us, and then there's others on your list. So, if there's something that's coming up at the capitol, and you go, yeah, I remember hearing or seeing that somewhere, let me give Cottage Grove a call, or hey, maybe we need you to come and talk or whatever. We're there for it, that's what the goal and the objective on that is.

Representative Hansen said mayor, any proposed holding facilities or detention facilities in your future?

Mayor Bailey replied no. They're in town, though, like meaning ICE is in town, so we've seen them around town.

Representative Dippel said on the eBike issue, I'm chief author on the eBike legislation, and we're trying to bring more clarity to that. There's a general misunderstanding among the public that if you have an eBike that has more than 1,500 watts of power and doesn't need any assisting, it's actually an E-Moto, and it's more like a motorcycle at that point. And, so, trying to bring clarity that you can't drive a motorcycle down the sidewalk, and that can do serious harm to individuals, too. That happened specifically down in Hastings, which kind of instigated really working with Bike MN on the other classifications, too; there's general, good guidelines from the State level on the Class 1, 2, and 3 eBikes, but the E-Motos is something really completely different that people need to understand. You can't just go 60 MPH down the sidewalk and run into people and go crazy. So, hopefully, that's coming down the pike.

Commissioner Bigham asked didn't somebody get really hurt in Hastings? Representative Dippel replied yeah, Janet.

Commissioner Bigham asked and it was not on the river?

Representative Dippel replied it wasn't on the river, no, it was over by St. Phillip's Church, right down there on 15th, I think. And, yeah, she was almost killed. She was in the hospital for almost four weeks, and she can't smell or taste anymore, and she'll be coming up to testify on this Bill for sure.

Council Member Garza said Tom, you know there are probably a lot of parents who are not even understanding the difference between the bikes they buy their kids for Christmas presents and are not really sure that it's a Moto vs. an eBike or whatever it is.

Representative Dippel replied in this situation, it was a 14-year-old, and he just wasn't paying attention, going 25 when he hit the lady from behind.

Council Member Garza asked it was 25? That's crazy.

Council Member Olsen said and we're even seeing them at public venues like Strawberry Fest and in front of the school, so, it's a concern.

Representative Dippel said but at the same time, we don't want to restrict people's legal and safe usage. It's good for people to get out and bike, we want people to use the trails and enjoy everything that this area has to offer, but they just can't put other people in harm's way when they're doing it.

Representative Johnson said a question, going back to Finance, with the Secure Sales Tax, is that for purchases and goods? Because right now, whenever a city has a project, they come to the Tax Committee and ask for an exemption for a particular project. So, and right now, you said you don't have to pay motor vehicle tax on fire engines, correct?

Director Malinowski replied right. Council Member Olsen added on Police and Fire, as long as they're marked.

Representative Johnson asked how extensive, I mean, how far do you want this to go, as far as, do you want to go with everything that Cottage Grove does and you don't ever have to come ask for an exemption? Or do you want; I'm just wondering what we possibly could get through and what you actually want to get.

Mayor Bailey replied honestly, the answer is yes because if it's; here's the, and this is just me, so, all of us that live in Cottage Grove pay taxes. And then we're having to buy things and pay a tax on that. It just, to me, it doesn't make sense because it's also double taxation on our residents because we know we have to provide, you know, added Sales Tax. And, obviously, we utilized this opportunity in the past where we'll go up to the capitol and say, hey, we've got this project coming, can you help us not pay Sales Tax on this because it would save some taxpayers' money? If we didn't have to do that, because you know as well as I do that takes time and it takes lobbying, it takes all the different people that have to be willing to do it. So, if that is something that you can get around; I mean, if you can't, you can't, but if you're asking, I think most cities, I think I can speak for the East Metro cities, it would make so much sense because we're just taking from this pot and putting it over here and causing us not to have to increase our property taxes on the residents.

Representative Johnson said I mean, they still would have to, you know, do a, I know when we go in there and start asking the registrar, there are actually different people that help us with that, it'll be interesting how much that would actually cost. Sometimes I think the people that are sitting in the Committee here like to see them come up and do the dog-and-pony show of please, exempt us this time and stuff. But if we could get that dealt with and the money's there, I mean, we can do things in Tax Committee, but it's just a matter of if the money's there, so. Okay, thank you.

Commissioner Bigham said it has been done before with a hefty Bill, and it's something that can.

Representative Johnson said what was hefty back then?

Commissioner Bigham replied back then, it was hundreds of millions, and then when the economy went bad, it was the low-hanging fruit that was eliminated first.

Representative Johnson said, oh, okay. Mayor Bailey said that was what we were talking about earlier.

Representative Johnson asked so, it was there and then what? Commissioner Bigham said it was there and it got. We're coming, we're coming this year, okay? We're on a mission. So, we'll be using specific projects.

Representative Johnson said Woodbury came in last year. Commissioner Bigham replied yep and got it; Mayor Bailey agreed. Representative Johnson said okay.

Mayor Bailey said well, thank you. Thank you, I mean, for listening. Thank you for all the work you guys do up there. I know it's not going to be easy for you, just like it's not going to be easy for us in the suburbs, too, but we do appreciate all of the effort and the support that you give us. So, again, if you need anything from us, just ask us for some information. I mean, this is our overview, so if there's something you need.

Representative Hansen asked how about a group photo?

Mayor Bailey said oh, we could do that. Council Member Olsen said we'd love that, yeah. Commissioner Bigham said Rick will never let a group photo pass. Representative Johnson said all I know is I want to stand next to Karla because it's so fun. Commissioner Bigham said yeah, it's always great. Mayor Bailey said exactly.

Phil said it's not a problem, then then took a photo of the Council and the legislators. Phil said a couple more for good measure.

Mayor Bailey said thank you. All legislators, City Council Members, and staff who were present thanked each other and began conversing with each other.

## 3. ADJOURNMENT

The meeting was adjourned at 6:52 p.m.

Minutes prepared by Judy Graf and reviewed by Tamara Anderson, City Clerk.

# City Council Action Request

# 7.C.

| | |
|---|---|
| **Meeting Date** | 3/4/2026 |
| **Department** | Community Development |
| **Agenda Category** | Action Item |
| **Title** | Planning Commission Minutes (2025-12-15) |
| **Staff Recommendation** | Accept and place on file the minutes from the December 15, 2025, Planning Commission meeting. |
| **Budget Implication** | N/A |

**Attachments**

| | |
|---|---|
| 1. | PC Minutes 2025-12-15 |

**COTTAGE GROVE PLANNING COMMISSION** **December 15, 2025**
**12800 Ravine Parkway South**
**Cottage Grove, MN 55016**
**COUNCIL CHAMBER - 7:00 P.M.**

The Regular Meeting of the Planning Commission was held in the Council Chamber and telecast on Local Government Cable Channel 16.

## 1. CALL TO ORDER

Brittain called the Planning Commission meeting to order at 7:00 p.m.

## 2. ROLL CALL

Pradeep Bhat-Here; Ken Brittain-Here; Jessica Fisher-Here; Evan Frazier-Excused Absence; Eric Knable-Unexcused Absence; John Stechmann-Here; Terrence Woodman-Excused Absence.

Members Absent: Evan Frazier, Eric Knable, Terry Woodman

Staff Present: Emily Schmitz, Community Development Director; Samantha Pierret, Senior Planner; Kelly Becker, Associate Planner; Paul Sponholz, City Engineer; Crystal Raleigh, Assistant City Engineer; Justin Olsen, City Council Liaison.

## 3. APPROVAL OF AGENDA

***Stechmann made a motion to approve the agenda. Fisher seconded. The motion was approved unanimously (4-to-0 vote).***

## 4. OPEN FORUM

Brittain opened the Open Forum and asked if anyone wished to address the Planning Commission on any non-agenda item. No one spoke. Brittain closed the Open Forum.

## 5. CHAIR'S EXPLANATION OF THE PUBLIC HEARING PROCESS

Brittain explained the purpose of the Planning Commission, which serves in an advisory capacity to the City Council, and that the City Council makes all final decisions. In addition, he explained the process of conducting a public hearing and requested that any person wishing to speak should go to the podium and state their full name and address for the public record.

## 6. PUBLIC HEARINGS AND APPLICATIONS

**A. 7430 80th Street Cannabis Retail Sales - CUP/V2025-032**
**Venus Creations LLC has applied for a Conditional Use Permit to engage in cannabis retail sales and a Variance to be less than 1,000 feet from another cannabis or lower potency hemp edible retail establishment.**

Pierret summarized the staff report and recommended denial based on the findings of fact stipulated in the staff report.

Brittain asked if there were any questions for staff.

Fisher asked what is the actual distance between this shop and the MoonSoon Tobacco shop, because I see that it's less than 1,000 feet, but what is the actual distance? Did that get measured? Pierret replied on the map shown on the screen, it is

approximately 930 feet to that property line. Fisher said my second question is it has to be more than 500 feet from an attraction within a public park that is regularly used by minors; so, I'd like to know how you decide what is an attraction, first of all, and secondly, how you determine if it's one that's used by minors or not, because that's a disc golf course, too. I just thought it was odd that the hammock post was called out as an attraction that minors use. Pierret replied that in our City Code it does specify certain things, such as public park, restrooms, pavilions, picnic shelters, and also disc golf nets are also included that we measure from. In this case, when we're thinking about that hammock area, this was at staff's discretion where the hammock area would be a place where children or minors could congregate at times, and it would be what the ordinance was kind of meant to buffer us from.

Brittan asked if the applicant had anything they'd like to add, and said please state your name and address for the record.

Matt Leisen, 17870 Jaguar Circle, Lakeville, MN, 55044, said I'm appearing on behalf of Venus Creations LLC for the owner, Ms. Rebecca Hildalgo, who cannot be here tonight. I just want to read a statement that was prepared on her behalf:

*"Venus Creations LLC seeks a Conditional Use Permit and Variance to operate a cannabis retail store at 7430 80th Street South, Suite 105, within an existing multi-tenant retail building in a Mixed-Use District. The company is owned by Ms. Rebecca Hidalgo, who has long aspired to responsibly operate her own retail cannabis store that is compliant, secure, and community minded. As was mentioned, in particular tonight, Ms. Hidalgo respectfully submits a Variance request to be allowed the operation of a cannabis retail dispensary here, at this location. This Variance is necessary because City Code requires a minimum separation of 1,000 feet between cannabis and lower-potency hemp edible uses, measured from storefront to property line. The proposed location of Ms. Hidalgo's store is approximately 930 feet from the nearest store line of the closest low-potency hemp retailer. The Variance is consistent with the City of Cottage Grove's 2040 Comprehensive Plan for the future use of Mixed-Use Districts, which at the time of its adoption, cannabis use and legalization was not yet being considered. In this case, cannabis retail aligns with the vision of Mixed-Use intended to allow complementary uses to support economic development goals. Furthermore, the proposal complies with all other distance requirements, such as being 500+ feet from any parks or daycares, etc. Granting the Variance will also not harm public welfare or adjacent properties. The applicant must obtain local licensure and pass a comprehensive State inspection, ensuring compliance with stringent security measures, including 24/7 surveillance, alarms, and restricted access volts. Lastly, the Variance will not impair air or light to adjacent properties nor will the increased traffic congestion require risk or endanger public safety. So, in summary, the requested Variance is consistent with the City's Comprehensive Plan, it allows reasonable use of the property, and it will not harm public welfare or adjacent properties. For these reasons, Venus Creations respectfully requests that the approval of the Variance be granted and the Conditional Use Permit also be granted. Thank you for your time."*

Brittain asked if there were any questions for the applicant, none were asked. Brittain said thank you, sir.

Brittain opened the Public Hearing. No one spoke. Brittain closed the Public Hearing.

Brittain asked if there was further discussion from the commission.

Stechmann said thank you, Board Chair. So, I don't have any concern about the subject matter, that this is a store that would sell recreational use marijuana, but it seems to me that the proximity to the MoonSoon one could be problematic, and that's why we have these rules in place. I note that MoonSoon achieved approval just weeks before this one came before us, so it's almost a race to the City Hall, but the fact is that MoonSoon did come here first and did get the approval first. So, at this point, I would say that I'm inclined to not approve or not recommend an approval of this request.

Fisher said I have maybe a clarification question. So, when you're measuring, you said something about storefront to property line vs. storefront to storefront. So, when you're measuring the distance from this potential establishment to MoonSoon, you're going from property line to property line? Did I understand that right? Sorry, I'm getting confused. Pierret replied no, that's okay, Commissioner Fisher, Mr. Chair. So, we are measuring from the opposed storefront; on the map in front of you, it would be approximately where that green dot is to the property line of the MoonSoon Tobacco store; so, their property line ends at the line where the blue circle is. So, that's where we're measuring that distance from. Fisher said okay, and 70 feet is really what we're missing here. So, theoretically speaking, if they were to get a suite maybe down at like where Tom Moy's used to be, they potentially could have this granted. Or if they had, in that area, they would need a Variance. Pierret replied running the calculations, getting closer, down towards where Tom Moy used to be, actually gets them about too close to the hammock area.

Fisher said I forgot about those. Okay, gotcha. I agree with Commissioner Stechmann, you know we have these rules in place for a reason; I feel this one may be splitting hairs a little bit, but ultimately following the guidelines that we've set forth makes the most sense to me. So, thank you.

Brittain said okay, I'll add that I know this is relatively new for the community and for a lot of communities, and I would agree with Commissioner Stechmann and Fisher's comments. My concern would be we don't have enough data to try and determine whether 70 feet is close enough, 80 feet is close enough. So, until we have more experience to determine what kind of challenges these businesses may or may not have, you know I would err on the side of following the letter of our rules, which is 1,000 feet; and, you know, maybe sometime in the future that distance may change, but for now, I would recommend and support denial based on the findings of fact.

Brittain asked if there was any further discussion, there was not. He said seeing none, I'll look for a motion.

***Stechmann made a motion to deny the Variance and Conditional Use Permit, as outlined in the application materials. Fisher seconded. The motion was approved unanimously (4-to-0 vote).***

Brittain noted that item will on the January 21 meeting of the City Council.

**B. Van Meter Expansion - SP/V2025-031**
**Van Meter Inc. has applied for a Site Plan Review for additions onto their existing building at 7450 95th Street South. The additions are comprised of two expansion areas: Expansion B is approximately 86,720 square feet to be used for receiving, warehousing, and will-call operations. Expansion A is approximately 38,220 square feet to be used for warehousing. The applicant has also applied for a Variance to allow Expansion A to expand into the required 100-foot property line setback from the residential-zoned property to the north.**

**C. Van Meter Exterior Storage - CUP2025-032**
**Van Meter Inc. has applied for a Conditional Use Permit to allow for the exterior storage of materials within a 10,000 square foot enclosed with 8- to 10-foot tall vinyl fencing.**

Becker summarized the staff report and recommended approval subject to the conditions stipulated in this staff report.

Brittain asked if there were any questions for staff.

Bhat asked so the parking space requirement, is it for the general public or is it just a total number, and it could be divided any way the applicant wants? Could those be additional parking spots from several users? Becker replied yes, Commissioner Bhat, that is based on the total warehouse square footage, so for warehouse needs. Bhat asked so, there's no requirement, per se, that need to be opened up for the public or general use? Becker replied yes.

Brittain asked if there was anything the applicant wanted to add, they declined.

***Brittain opened the Public Hearing for the Site Plan Review and Variance for the expansion at their existing location. No one spoke. Brittain closed the Public Hearing.***

Brittain asked if there was further discussion from the commission.

Fisher said I think that the Variance should be granted on this one, just considering that it makes sense and it falls in line with the existing building and because our setbacks have changed over the years. It makes sense that this Variance should be granted, so that's all I really have to say. It seems like Van Meter is growing and growing and growing, and I think that's awesome for our community to have such a business that's growing and needing more space, again. So, that's my thought.

Stechmann said I wish I would've gone first because that's exactly what I would have said. I'm grateful and I'm inclined to say yes, also.

Bhat said I have a question for the applicant. Brittain replied certainly, would the applicant please approach the podium and state their name and address for the record. Good Evening, my name is Nate Jensema, I'm the C.O.O. at Van Meter, my personal address if you're looking for that, 470 Wilder Drive, Cedar Rapids, Iowa. Bhat said so my question is regarding the requirement

for this additional outdoor warehousing. Since we have already these new buildings coming up in this other location, what drives you for this additional outdoor warehousing? Jensema replied good question, commissioner. So, the permit for the additional space, the outside storage that your question is about, the request for that is really a result of the fact that we are going to be operating at our existing facility, fully supporting our customers, while expanding. And, so, that's going to take up the outside storage at our existing facility as trucks are coming in and out. So, we aren't going to have the ability to store our outside material at our existing facility while the construction is going on. So, we're asking for the ability to store outside material at our leased space, at our Wire Center today, while the construction is going on, and then eventually, we will move all of our operations back to 95th Street once the construction is complete. Bhat said thank you.

Brittain said okay, just to clarify, that particular outdoor storage space is Portion B, and right now, we're talking about Portion A, so it's okay. Just as we look for a motion and take a vote, we are voting on A, which is the Site Plan Review and the Variance for the building setback.

Brittain said and I will agree with comments from Commissioners Fisher and Stechmann that the continuity of the building, to extend that in an area that they are and what they're requesting a Variance for makes total sense. We haven't seen any negative impacts from the building being any closer to that side setback so far. So, having it linearly continue in the same way, I see no negative impact, plus it's a non-buildable area out in that direction anyway, so I really see no concerns with that at all.

***Fisher made a motion to approve the Site Plan Review and Variance at 7450 95th Street South, based on the findings of fact and subject to the conditions stipulated in the staff report. Stechmann seconded. The motion was approved unanimously (4-to-0 vote).***

***Brittain opened the Public Hearing for the exterior storage Conditional Use Permit. No one spoke. Brittain closed the Public Hearing.***

Brittain asked if there was any further discussion.

Fisher said I will just say one thing. We've had other CUPs for storage on that property, so this seems pretty straightforward, that we would allow this one as well.

Brittain said thank you, I would agree. We already have outdoor storage in that area, this is an Industrial base, its not adjacent to any other residential use. So, I also agree that the Conditional Use Permit would be acceptable in this case.

***Bhat made a motion to approve the Conditional Use Permit to allow exterior storage at 7601 100th Street South, subject to the conditions stipulated in the staff report. Fisher seconded. The motion was approved unanimously (4-to-0 vote).***

Brittain said that will be on the January 21, 2026 City Council Agenda.

**D. Yellow Tree Apartments – PUD/SP/PP2025-030**
**Yellow Tree Development has applied for a Site Plan Review and Planned Unit Development (PUD) for a proposed 186-unit, market-rate apartment building to be located on East Point Douglas Road. A Preliminary Plat application has also been submitted for Everwood 6th Addition.**

Pierret summarized the staff report and recommended approval subject to the conditions stipulated in this staff report.

Brittain asked if commissioner had questions for staff.

Stechmann said thank you, I appreciate the presentation. I do have some curiosity about some aspects of it that I'd like to convey, and maybe you can help enlighten me a little bit. First of all, with respect to the Planned Unit Development (PUD) aspect of this, so I think I heard you say that is being considered in this case because of the unique topography or the location of this application. So, my first question is, is it commonplace these days for the City of Cottage Grove to grant PUDs, something along these lines? Pierret replied Commissioner Stechmann, Mr. Chair, so I would say a PUD is intended to be rarely used, similar to like a Variance situation where we've kind of spoken about Variances. It's a unique situation, unique to each property, and this PUD is used where they can meet our Code and meet the intent and the goals of the City and of the Council just with a little bit of give and take in some areas. Stechmann said and to continue along those lines, is the necessity born out of the size of the proposed project, or is there some other aspect? Is it the topography or is it a combination of both or something else that I haven't

mentioned so far? Pierret replied Commissioner Stechmann, that's a good question. So, what I will say is there have been several other developers who have looked at this site in the past; as I mentioned, it was platted in 2007; these developers could not make the numbers pencil out when we were talking about where that conservation easement is, the trail easement, and existing topography on site. Then, just the sheer costs of when we have a restricted buildable area like this, there's not room for exterior parking, so we're having to do the covered parking, which is an additional expense of course. So, I would say this particular parcel has been looked at several times, and it is definitely a unique one that this developer has found a way to meet most of our Codes and Ordinances. Stechmann said okay. If it wasn't being used for a family or a multiunit type of property, would it be suitable for a different type of use that would not require a PUD? Pierret replied good question. If a developer were to come in and request anything that's also permitted in the Mixed-Use District, so we're talking retail or other sorts of commercial ventures, of course they would be more than welcome to do that, and if they can do that without a PUD, that would be great. However, when I look at this property just as a planner and everything, I don't see how anybody would be able to avoid the PUD in this case, just given the status of the site.

Stechmann said following up a little bit more, if you don't mind? Brittain asked do your follow-up questions have to do with something that's appropriate to the Ordinances, or is it specific to the PUD? Stechmann replied it's the PUD. Brittain said okay, just if you could focus on what would be a condition of approval or denial, not necessarily the tools the staff is using to accomplish the application.

Stechmann said okay, all right. Well, I guess there's this question, and I know that there was consideration or thinking about the vehicular traffic, but was there something that was along the pedestrian traffic? Is that an appropriate question, Mr. Chair? Brittain replied yes. Pierret replied so regarding the pedestrian traffic, I am going to bring up our Assistant City Engineer, Crystal Raleigh. She has provided me with all of this wonderful information that I talked about. Raleigh said Good Evening, Commissioner Stechmann, the pedestrians were considered in the application here. The characteristics of Hardwood Avenue through this area are very challenging as it related to pedestrian crossings. I'm going to take you back to this drawing; these curves that are currently on Hardwood Avenue do not provide adequate sight distance or safe pedestrian crossings, so we struggle with having our pedestrians cross at those locations. We did construct a traffic signal at Hardwood and Hardwood, down on the southeast corner of this image, and with that intersection, we have really safe pedestrian crossings. Now, according to Minnesota Statute, pedestrians can cross at any intersection, and so while pedestrians could cross Hardwood, we do not want to mark that as a pedestrian crossing due to the safety concerns that we have as staff. We don't want to provide pedestrians with a false sense of security in those other crossing locations; so, we would like to promote crossing at that safer location with the traffic signal. Does that answer your questions? Stechmann replied it does, but it does also prompt another one. So, for example, if somebody were living at the proposed development and wanted to visit the Sushi Café, for example, under this particular proposal, they would have to kind of trek all the way down to the Hardwood Court crossover there, then come back up and head that way. I'm just wondering is there any other way to mitigate that? I don't know if there would be some kind of a little additional way to have them cross over into the parking lot, just south of the building of Kohl's, or if there would be something else that could be done? Raleigh replied Commissioner Stechmann, Mr. Chair, when The Legends apartment building went in, there was consideration made for a sidewalk connection onto the Kohl's parking lot from East Point Douglas Road, and Kohl's was not excited about that proposal, and also, there's a really steep hill there. It's hard to see on a flat image here, but there's not a way to make that ADA accessible with a sidewalk piece between East Point Douglas and Kohl's. Another issue is we would have to cross people from the north side of East Point Douglas to the south side, and at that curve, again the sight distance isn't great. So, that's another reason we wouldn't want to cross folks right there. Stechmann said thank you.

Fisher said I want to continue on with Commissioner Stechmann's question. So, this particular intersection has given me pause in the past. I'm wondering, as you talk about the traffic study and the additional trips, which is more than doubling the trips per day going down into this area. What is the threshold for having some sort of signal there, and how close are we to that threshold? Because my office is in this area, I am on this road all the time, and people are nuts; no offense, but people go fast around those curves. It's just not a great road to travel on, and I'm just curious what the threshold is and how close we are to it because we've got to be close to it for that particular intersection. Raleigh replied Commissioner Fisher, Mr. Chair, I don't have those exact numbers about how close we are. I know in that previous traffic study, we were talking about 5,000-6,000 vehicles per day as what East Point Douglas can handle. A traffic study at the intersection is what would be needed to verify if those intersection controls are correct. The studies that have been done so far show that with the amount of traffic on Hardwood Avenue, it wouldn't be reasonable to stop Hardwood traffic, and the relatively small amount of traffic that we're adding with this development wouldn't be enough to warrant additional traffic controls at that intersection. Yes, there will be additional queuing, you will have to wait a little bit longer to take a left out of there, but that intersection isn't warranted for controls at this point. Fisher said okay, I was just curious. Raleigh said and we do traffic counts continually, annually, so if things change in the future, perhaps the City will need to reconsider, but at this point, we don't anticipate any changes at that intersection. Fisher said I will

say I do appreciate the new stoplight because taking a left off of Hardwood Court was sometimes impossible. So, I do appreciate that, but maybe there'll be another one in the future, maybe I'll get a light there someday, I don't know. Thank you very much.

Bhat said so my question goes to one of the stipulations that you have, which is a requirement to hold that neighborhood meeting. So, my question is why haven't we done that already? Pierret said Commissioner Bhat, that is a very good question. So, we have required that the applicant hold that neighborhood meeting. When they first applied, the timeline was really tight, and we are actually, this meeting we're having tonight is actually a week earlier than our traditional Planning Commission meeting. So, the timeline was tight and the applicant has reached out to staff at The Legends to hold that meeting; it's also a matter of getting hold of them and figuring out a date and time that will work for everyone who lives at The Legends. Bhat said so, my follow up then is if, after that meeting, would it come back with some modifications, and do we need to consider this application again? Pierret replied so, it would not come back unless something came out of that that drastically changed the Site Plan in some way from what you're considering tonight. Any comments or concerns should be able to be added to the report for the City Council, and they would take that into consideration when they make the final decision. Bhat said okay, my last question. So, did it in any way hinder the participation of public for this meeting here? I mean, did the people at The Legends knew that it was being considered at the meeting today and they had ample opportunity to voice any concerns that they had prior to the neighborhood meeting? Pierret replied so, Commissioner Bhat, we did send out the Public Notice; obviously, that does not go to everyone who lives at The Legends. I'm not sure what their process is for sending out Public Notices, the notice was actually sent out two times because we were going to consider this at your November meeting. Then I did actually have a phone call with a resident at The Legends last Friday, and in the duration of our conversation I let her know what we were considering tonight, too, and that she could come and bring all her friends with her to make their comments heard; but there would also be a meeting at The Legends that they would be able to participate in, and she sounded like she was looking forward to that meeting on site. Bhat said okay, thank you.

Fisher said I just, I guess wanted to underline that we as Planning Commissioners have questions that we ask to make sure that we understand the proposal in front of us, and I would just really like to make sure that Commissioner Stechmann's questions were all answered when he was stopped before. I think it's important that we all get our questions answered appropriately. Stechmann said thank you, and thank you for your concern. My questions I think are answered. I have some hesitations that I'll explain in my appropriate comments section, but for now, I have no further questions. So, thank you.

Brittain asked does the applicant have anything they'd like to add; please state your name and address for the public record.

Good Evening, Members of the Commission, I'm Robb Lubenow with Yellow Tree development at 1834 East 38th Street in Minneapolis. I'm also joined by Patrick Sarver with Civil Site Group, so he handled a lot of the concerns and complexities of the site, we're basically building in the side of a hill. It is truly the most difficult project I've worked on in my career, without question. I think we're on eight iterations of how we could manage a lot of the complexities on the site, Sam did a great job explaining those. I'm open to answering any questions, I think it kind of comes down to the three concerns: The site, parking, and cladding, the way I see it. I'll answer your questions, but quickly, the site: If this was across the street or on any flat lot, we'd be under 50 feet. So, just on the side of a hill, the back of our building, its a four-story building, and we're exposed where the parking levels are, so, I'm willing to go more in depth on that. The same with parking, we are very comfortable with parking requirements, we have other operating buildings, we manage our own buildings; it is actually in excess of what I think we actually need, but I'm comfortable and really, as you can see, we're over almost our entire amount of parking, which is not typical for any type of development outside of the urban core. Last, the cladding, that is very difficult. I know we're working on how we'd like this building to look. You do have your cladding requirements that we respect, and I do think this is a good compromise of what is esthetically pleasing and very quality materials. So, our concealed fastener metal panel that looks like the real wood is more durable than wood. We stand behind those products, and I think it does provide a great visual interest for the building that otherwise we don't want to look at a, no offense, but a glass and brick building from like the 1970s; we're adding undulations on the exterior and also working with the cladding materials. So, I'm happy to answer any more questions and if there are Civil questions, Patrick is here as well.

Brittain said okay, are there questions for the applicant?

Fisher said so just talking about the materials and kind of using certain materials on certain sides, is that also a significant cost savings, or are you just strictly choosing those materials because you feel that they perform better? Lubenow replied both, there certainly is both, there are immense cost impacts to your required materials. So, in a typical building like this, what we have in our general parameters for this type of in-hill development, we're about $1 million over budget just on the cladding materials. So, with that being said, there's, we're not having vinyl siding, we're not having a cheap wood product, or even I think the

concrete board is our cheapest material. But that wood like and metal siding is certainly cheaper than brick. There are also concerns about how high you go with brick and the relief angles and everything else that come into play, so yes. Fisher said gotcha, I was just looking for the actual like percentage. I think it was like just a few percentage points less, so okay, thank you very much.

Brittain said just out of curiosity, we haven't had an apartment building with a double level underground parking. How do you get to each of those levels from outside? Lubenow replied in this case, we're handling it by an interior ramp. So, you'll access the rear of the building where some more retaining walls and that public pathway goes. Then you'll have the option to veer off on Level 1 or stay on your current level and ramp up to the second level. So, at first glance, we did not think a two-level parking, precast, would be the most cost effective, but it turned out to be. We are building into stone and that stone is self supporting, so we're not required to have shoring there, so that kind of works with us in this case; we have to get rid of it, we have to get rid of the stone, but we also don't have to put in shoring, so that helps. Brittain said okay, thank you.

Bhat said I'm just following up on the parking question. So, my initial understanding was that both levels were underground, but are they? Lubenow replied it would be on a typical lot. They would be, they are the type of parking that's typically subterranean parking, but on the back of our building and most of the sides, it is underground; but as the lot falls off at a very steep angle, the front of the building its exposed. So, that's one of the difficulties we've been working with is building into that hill and taking that triangle out, and then we can't go down another 20 feet into more bedrock, and then the units on the back of our building would be on the side of a hill. So, we'd lose all the back of the units on a double corridor. So, that's not practical. Bhat said okay, so when you enter the parking lot, you would be below level, and then you would have the option to go up? Lubenow replied yep, that's correct. Bhat said okay, thank you.

Fisher said so, you'll be taking some rock out, obviously; you'll be blasting, I would assume? Lubenow confirmed that. Fisher asked are there considerations for neighbors, how does? I mean, we don't hear of blasting often here, so what does that all entail and what does that look like? Lubenow replied I agree all types of construction is very intrusive, that is certainly intrusive. We had one contractor reach out to us as to what is allowed in the City for blasting. That is one option, we don't know if it's the most cost effective, it's a light sandstone. So, most likely most of it can be removed by just a small-toothed bucket, chipping away at it. That is our preferred method, but there might be areas where the type of rock changes slightly that there'd be the need for some blasting. Fisher asked does the City require a specific permit or anything like that to blast bedrock? Raleigh replied Commissioner Fisher, Mr. Chair, we do have a process for blasting permits. It's not necessarily a permit, but there's a very close back and forth with the Engineering Department. There are a lot of requirements for monitoring around the site when blasting is required. They have to put together a very detailed Blasting Plan, we do televise utilities that are underground before blasting and after blasting to ensure there are no impacts to the existing utilities on site. All those things are covered in that Blasting Plan that gets submitted to us for review. Once that's approved, we can move forward with it. Fisher said thank you. Lubenow said and one note, in a brief conversation with the contractor, they said it is similar, if not less intrusive, than pounding piles because at least that energy can go upward with the stone. So, it's probably pretty similar, I'm not sure if Rohrs is putting any shoring in, but there's certainly impacts to pounding piles for shoring as well.

Brittain asked if there were any additional questions for the applicant, none were asked.

***Brittain opened the Public Hearing. No one spoke. Brittain closed the Public Hearing.***

Brittain asked if there was any further discussion.

Stechmann said okay, I've read this portion of the packet a couple times, and I've tried to do my best to come to terms with what is being asked and my response. As a member of the Planning Commission, I do have some concerns. So, for example, about the traffic, so I know that in an ideal world, we would encourage the pedestrians to go the appropriate route all the way down to the signal crossing area, and then cross back and make their way back up to Sushi Café or any of those other restaurants that are up that way. As being a former prosecutor for 15 years, I know that is often an unrelated breach, and most people would simply disregard the safe ways to cross the streets. If we add 186 units in this area, which is market rate, so it's not like designed for senior living or other places, there will be youngsters, people who are not fully appreciating the safety concerns that they would have. Instead, they would want to cross across Hardwood Avenue, especially with respect to that intersection with East Point Douglas Road. For me, if a person is crossing over that, perhaps at night, and certainly without the benefit of a crosswalk or flashing lights or any other thing to help indicate to vehicular traffic that there may be pedestrians in this road crossing five lanes, it seems to me that that is a risk worth considering. I did not see sufficient mitigation in terms of that part. I understand that other things can be done, but at least at this point in time, I do have concerns about the pedestrian traffic in this area. I know

that vehicular traffic is expected to about double, it's not going to reach the capacity for this type of street, but if additional developments come down the road, then it will be; so, then there will be a need for additional types of whatever type of traffic control to lessen the risk for pedestrians getting hurt. That's one of my concerns that I have about this. Another one is when it comes to the Planned Unit Development; so, I understand again this is used as a tool in a unique situation, and probably both sides benefit from having these types of tools being used, and there are proper times I think for a PUD to be used. My concern is could it be the case where this particular applicant or this particular project could find a home someplace else in the City of Cottage Grove that does not require a PUD. I don't know, I don't know if that's an appropriate question for us to ask at this point in time, but it is something that has weighed on my mind again as a volunteer member of this Planning Commission. I also wonder like would there be another use for this real estate, if something that was less ambitious would come along, either in size, complexity, or purpose that would not require the granting of a PUD? Now, I don't know if that is the case, I don't know if it's been studied in the past, and there have been multiple applicants in the past, and for whatever reason, if the numbers didn't work, that's fine. But I'm just wondering if maybe somebody moving forward would then find a workable solution for this real estate, for it to be developed and be a productive part of our community, with respect to its character and also to the safety concerns that I've raised earlier today. Finally, I would like to say that I sincerely do appreciate the enormous amount of time and energy that has been placed into the multiple iterations of this proposal. I understand it was the most difficult one that was undertaken ever or in your career or what have you. I get that, and I do welcome the idea of having additional housing come to Cottage Grove. There is a surplus of 3-bedrooms, I get that, and a deficit of smaller units, 2-bedroom and 1-bedroom or a studio; maybe that could be mitigated by finding another location or reducing the size or what have you, but at this point in time, I'm thinking that this one might not be the appropriate use for this particular location.

Fisher said I'm going to chime in. I appreciate Commissioner Stechmann's thought process. One thing I'll weigh in is I mean this is a willing buyer, willing seller situation, though when you have a piece of real estate for sale, or somebody wants to sell it, and we have a willing buyer, who wants to buy it and wants to put something in that. We've had multiple studies with population and our housing needs in the community, and this is something that would help serve some of those needs. A PUD is not a scary thing. It's not something that's rare or that's something we don't see very often, and maybe I've just been here too long because I've seen several. So it's not something that I think needs to be shied away from or needs to be avoided in lieu of some other use, right? So, I think ultimately it boils down to there's a willing seller that is ready to sell this parcel and a willing buyer, ready to develop it and to meet some needs of our community. So, that being said, I don't know if it's our job or our, I don't know what the word is, to find a better spot for this particular building or for this particular parcel to develop into something different. I do agree with you about the traffic concerns and pedestrian concerns at that corner, and like I was saying before, I've griped about that corner before with other applications, too. So, I appreciate your comments, I will just underline we have a willing buyer and a willing seller and that PUD is a really useful way to use unique parcels.

Bhat said my concern is with regard to having, I don't know if we have allowed for enough public participation because this was not discussed with or considered with the Immediate neighborhood. So, if we had done that, perhaps regarding concerns regarding traffic, either neighborhood traffic or even foot traffic, would have come up more strongly. I don't know, maybe not that strongly. So, that's one of my concerns, what we have here, I'm not sure if we had, if there has been enough advertisement so that we considered all options or all opinions. That's my concern.

Brittain said Director Schmitz. Schmitz said Mr. Chair, Members of the Commission, I'll just add a couple additional thoughts onto your thoughts:

1. I'll indicate we always send a Public Hearing notice to all residents within 500 feet of an application. So, Commissioner Bhat, to your concern that the neighborhood has not been informed, they absolutely have, and that's the Public Hearing held this evening to give them an opportunity. The neighborhood meeting is an addition to that notice of this application, obviously, to hear any concerns with that. So, with any application, we're sending that notice out to those within 500 feet.
2. And then I'll add maybe just a little bit of history on a Planned Unit Development. In the past, yes, we had seen quite a few Planned Unit Developments. Typically, we'd see them with Single Family Residential projects, and that was well before we amended our 1974 Zoning Code which, for lack of a better way to put it, was out of date, right? It didn't align with market trends, we were having to find ways to support development in Cottage Grove that didn't necessarily align with our Code; it was completely out of trend, out of date, out of marketability, and to be able to support those developments. Now, when we rewrote our entire Ordinance, understanding full well that we had in the past defined quite a bit of the flexibility, we ensured that there was clarity in our Planned Unit Development Section of our Code: That if a project was to support the community as a whole, aligned with Strategic Goals of our Council and our Comprehensive Plan, and of course did not have a negative impact to the tax base of the community, by allowing for those flexibilities as a part of a project, that's when a Planned Unit Development was an appropriate tool to use with a development, whether residential, commercial, or industrial. And, so, just an additional thought

process as you contemplate that Planned Unit Development as a tool, yes, in unique instances, but our Code is quite clear when we are able to implement and when we aren't. So, we've certainly evaluated that as clearly as we could with this particular project. So, I'll just add those.

Fisher said I think it's great that you are having a community meeting at The Legends because I think a lot of those people are older and maybe don't like to travel later at night or in the cold. So, I appreciate you giving them the opportunity to voice their opinions, even if it's not right here, right now. I know I have full confidence that you guys will take notes and that will be presented with the packet to the City Council when they're deciding what to do. So, thank you for doing that.

Brittain said I just want to clarify something. So, when the community meeting happens, any responses that would be gained from the community meeting would be included in the packet for the City Council to review; is that correct? Schmitz replied Mr. Chair, Members of the Commission, we'll absolutely ensure that we will include an overview of any concerns that are raised as a part of that neighborhood meeting. Brittain said so, if there's some type of significant thing that comes up in that community meeting, then it can be addressed by the City Council. Schmitz replied absolutely, Mr. Chair, the Council will be aware of those conversations. Brittain said thanks.

Brittain said also, I'd like to comment on the use of the PUD is a standard tool that the City uses, if it's not frequent. In this particular instance, we would have had some Variances and a few other things to consider if we were doing it in a very different format, and from looking at the staff report, I don't find any of the Variances that would have been requested in a more complex manner to be out of scope for what this project is asking for. So, even if it wasn't a PUD, I'd support the application based upon what they're asking for and what Variances they would have needed, based on the information in the report. And with regards to the safety, there could be a single-family home on this lot with one person that's walking down that street, and they're going to have the same safety concerns that 168 residents are going to have. Anybody walking down that street is going to have to follow the rules or as a community, we're going to need to make it safer. I see that as this develops, if there is a concern that the City can note and justify that you do have an intersection there that you could put a light. So, even if we're not doing it now, there would be opportunities in the future, if warranted, to increase the safety. So, while I agree that there are some safety concerns, I think that under the circumstances, this particular development or any development going in there, isn't going to make that better or worse; they are what they are from what I'm seeing. So, I would support this application and hope that as safety concerns were identified, beyond what they appear to be today, that we could mitigate those with the normal tools that we have. So, those would be my comments for the discussion.

***Fisher made a motion to approve the PUD, Site Plan Review, and Preliminary Plat, subject to the conditions stipulated in the staff report. Bhat seconded. The motion was approved on a 3-to-1 vote (Nay vote by Stechmann).***

Brittain said this item will be on the February 18, 2026 City Council agenda.

## 7. APPROVAL OF MINUTES

**A. Approval of the November 24, 2025, Planning Commission Meeting Minutes**

***Stechmann made a motion to approve the November 24, 2025, Planning Commission Meeting Minutes. Bhat seconded. Motion passed unanimously (4-to-0 vote).***

## 8. REPORTS

## A. RECAP OF DECEMBER 2025 CITY COUNCIL MEETINGS

Schmitz summarized the actions taken at the December 3, 2025 City Council Meeting.

Schmitz said Council Member Olsen is here to add any details and is always happy to answer questions.

Council Member Olsen said hi, if you have any questions for me, I'm happy to answer those for you. I think Emily did a bang-up job of sharing what we covered in our first meeting in December. Of course, this meeting being a week early, you already got to hear about November, in November. We did pass our budget for 2026; we had a 3-1 vote on that budget. As we went through the budget process, and we ended up passing our preliminary budget, we had unanimous consent on the budget; but when it

came time to actually vote for the budget at the first meeting in December, one of our Council Members was absent, unfortunately, and then we had another Council Member who didn't feel comfortable with the budget. For those who may not be aware, the budget has to pass with a super majority, so we made that happen. It may have been easier if all five were present, similar to what you're dealing with this evening, you have four of you here instead of seven of you. That makes things a little more challenging sometimes. I would like to state, for the folks watching at home, that I appreciated the vigorous debate tonight. I think it's important to note that as Planning Commissioners, we expect that from you. Your job is to really inform the City Council as to your thoughts and concerns or approvals or whatever the case might be, for some of the projects that we then have to go on to consider. When you have the vigorous debate like you did tonight, it certainly plants the seed for some additional thoughts and questions that we may come to pass when it lands on our table. So, don't stop doing that. I don't ever want anybody on the Planning Commission, and you're going to be stuck with me next year, too, unfortunately, provided that passes, but I don't ever want anybody on the Planning Commission or any commission to think that they are being pigeonholed or pushed into a corner and you don't have options. I want you to vote your conscience every time. And, yes, there are rules and purview to what each of you do, depending on which commission you're on, but again, when it comes to the City Council, we read, believe it or not, the entire packet when we get it, and your commentary carries a lot of weight. What you do matters, so never lose sight of that.

Do you have any questions for me this evening? None were asked. Well, then let me be the second person at this desk to wish you all a very Happy Holiday season. I know that it's a challenging time for people, so don't forget to do your part to make everybody else's life a little easier, if you get a chance. It is the season of giving, and I would encourage everybody to give what they can when they can. Maybe lift up a neighbor who's having a tough time, or think about somebody even within your own family, who maybe is struggling. It's a rough time of year for some people, so count your blessings and share them if you get the opportunity would be my advice. And with that, Mr. Chair, I'll turn it back to you.

Brittain said thank you, Council Member Olsen.

B. RESPONSE TO PLANNING COMMISSION INQUIRIES - None.

C. PLANNING COMMISSION REQUESTS - None.

9. ADJOURNMENT

***Fisher made a motion to adjourn the meeting. Bhat seconded. Motion passed unanimously (4-to-0 vote). The meeting was adjourned at 8:30 p.m.***

# City Council Action Request

# 7.D.

| | |
|---|---|
| **Meeting Date** | 3/4/2026 |
| **Department** | Convention and Visitors Bureau |
| **Agenda Category** | Action Item |
| **Title** | Convention and Visitors Bureau Meeting Minutes (2025-11-25) |
| **Staff Recommendation** | Approve Convention and Visitors Bureau Meeting Minutes (2025-11-25) |
| **Budget Implication** | N/A |
| **Attachments** | 1. 11-25-2025 CVB Meeting Minutes |

DISCOVER
COTTAGE GROVE

**COTTAGE GROVE CONVENTION AND VISITORS BUREAU** **November 25, 2025**
**12800 RAVINE PARKWAY SOUTH**
**COTTAGE GROVE, MINNESOTA 55016**
**COUNCIL CHAMBER - 7:30 A.M.**

## 1. CALL TO ORDER

The meeting was called to order at 7:30 a.m. by Chair Laurie Levine.

## 2. PLEDGE OF ALLEGIANCE

Chair Levine asked everyone to please stand for the Pledge of Allegiance.

## 3. ROLL CALL

Chair Levine asked Alexa Anderson, Communications Specialist, to please do the roll.

| | |
|---|---|
| Members Present: | Sarah Grecula, Director<br>Michael Haatvedt, Director<br>Laurie Levine, Director<br>Erik Olson, Director<br>Chris Reese, Director (Arrived after Item 5) |
| Members Absent: | Tony Khambata, Director<br>Justin Olsen, Chairman |
| Staff Present: | Jennifer Levitt, City Administrator<br>Jaime Mann, Assistant to the City Administrator<br>Alexa Anderson, Communications Specialist<br>Phil Jents, Communications Manager<br>Molly Pietruszewski, Recreation Services Manager<br>Courtney Pirsig, Communications Specialist/Graphic Designer |
| Others Present: | None. |

## 4. ADOPTION OF THE AGENDA

**Director Haatvedt made a motion to Adopt the Agenda; second by Director Olson. Motion carried: 4-0.**

## 5. APPROVAL OF MINUTES

**A. Approval of August 26, 2025 CGCVB Meeting Minutes**

**Director Haatvedt made a motion to approve the August 26, 2025 CGCVB Meeting Minutes; second by Director Grecula. Motion carried: 4-0.**

## 6. PRESENTATIONS

**A. Holiday Events in Cottage Grove**

Good Morning, Everyone, my name is Molly Pietruszewski, I am the Recreation Services Manager for the City of Cottage Grove. I have the honor of sharing with you our upcoming Holiday events as a City entity that we are hosting, as well as some other organizations around town that are helping. I have a really cool job, I get to help out and work a lot of these groups and on the event committees to bring this up in Cottage Grove:

- Hale to the Bird 5K Race: This will be held at Hamlet Park this Thursday, Thanksgiving Day, and the race begins at 9:00 a.m. I do believe the online registration has closed, but they do take onsite registration on Thursday morning. Those who are already registered are able to pick up their race shirt and bibs on Wednesday night, at Hamlet Park. This is our 15th Anniversary of supporting the Hale to the Bird race, which then donates money to the Holiday Train, and then that money goes back to the Friends in Need Food Shelf. So, this is a huge part of our goal for the Holiday Train Committee supporting the food shelf. I talked with organizers yesterday, and they're on track for about 600 people signed up for this Thursday at Hamlet. So, we'd love to see more people come on out and support this great cause.
- Holiday Lights Home Tour: We opened early this year and the lights map is on the City's website, it opened November 12. So, if you are planning a big display, have one, or know your neighbor's address, you can go onto the City's website and feel free to add that address on there. It does create a live, interactive map so that you can go out with your family at night. As we were talking earlier, you might have to make two nights out of it, as it sounds like there's already 25 houses signed up. So, it's a great opportunity to get out this winter, as it sounds like it's coming tonight, and find something free to do in Cottage Grove for great family traditions to start.
- Hometown Holiday: Is scheduled for next Thursday. It sounds like we're going to have snow on the ground, hopefully, for that; in previous years, it's still been a little green out there. The event is held next Thursday, here at City Hall, from 5:00 to 7:00 p.m. It's a great, free family event. Everything's lit outside, aa great trail full of roads to walk on, Santa & Mrs. Claus will be here on the big chair or for photos. We do offer wagon rides from the HERO Center and the Washington County Service building, up to the driveway here at City Hall. Live reindeer, games and activities for kids, and food trucks will be out there selling food. There is even a warming tent to eat in, and the Park High School Choir will be walking around, performing inside and outside. Typically, this is a great family event: We've got the bonfire pits going, free cider and cookies, and we invite all of the community to come out and kind of start your holiday season next week with us.
- River Oaks Santa Brunch: Is scheduled for December 21, 9:00 a.m. to 12:00 p.m. I checked in with Denny, down at River Oaks, and reservations are about 70% full; so, you do have to call to make that reservation, we encourage people to do that sooner rather than later if this is something you want to get on your calendar. Once the spots are full, there's no opportunity to add more. It's a great chance to do photos with Santa, sleigh rides around the golf course, and then enjoy what they're calling a North Pole breakfast right in the banquet room at River Oaks. It's another great family tradition, I know a lot of families have done this for years. So, again, I encourage people to make reservations as soon as possible; even if you have to leave a message over the holiday week this week, be sure to do that, as they do keep track and will get you signed up in order.
- CPKC Holiday Train: This is kind of the big culmination and something I work on is the CPKC Holiday Train coming to town. We were fortunate enough to get a Saturday trip this year, so it's Saturday, December 13. Our goal this year is to raise $125,000 for the Friends in Need Food Shelf, and we are well on track to make that goal happen. The road closes at 3:00 p.m., and wagons start at 3:30 p.m. So, as of 3:30 p.m., the site will be live and open. There are a couple of activities, food trucks, there's a REMAX warming tent and the REMAX hot air balloon is there. The train arrives at 5:15 p.m., and then it does take about 15 minutes for them to kind of set the stage and for the stage to open at 5:30, and then they perform a handful of songs for about a half hour. Then there's the check presentation from CPKC, and then the train kind of closes up and they pull away. I recommend staying for the whole thing, but the train coming in and then leaving are probably two of the coolest parts you're going to see. So, again, we encourage people to get there early; there's the same kind of set up, we do provide wagon rides from the Park and Ride down the road. Otherwise, there will be other ends of the town: the Armory is open, and you'll just have to walk down to the event. Our musicians this year are American Authors and Pink Beard. Some of you may know there are two trains, one goes through Canada and the other through North America, and the musicians kind of alternate out, so we've got some great ones this year for our event.
- Get Out and Play! We just like to remind people that although recreation is sometimes focused on the summer, we encourage you to get out and play; our Parks Department and Public Works do a great job of keeping parking lots clear, keeping trails and sidewalks clear around our parks. We're working on getting warming houses staffed and opened; the goal is, provided we have ice and snow, the day after Christmas, same thing for the skating rinks. Cross-country skiing this year, we're hoping that the trails will be groomed down at River Oaks. Also this year, we are using our snowshoes again, out in the public; for those of you who don't know, we use our kayak rental trailer and build the back of it, and then we rent snowshoes, and I believe those will once again be at Oakwood Park this winter.
- Other Festive Happenings in Cottage Grove:
  -Minnesota Christmas Market 2025 at The Madison, November 29, 10:00 a.m. to 4:00 p.m.; come enjoy a Christmas Market at The Madison wedding and event venue
  -8th Annual Holiday Craft & Gift Market, December 6, 10:00 a.m. to 3:00 p.m., Cottage Grove Middle School, 7310 Lamar Avenue South, Homegrown brands and makers

-Cottage Grove Lions Santa Breakfast, December 7, 8:00 a.m. to 12:00 p.m., VFW Red Barn, 9260 East Point Douglas Road, South, $12 Adults, $8 Kids

Molly said I believe that is all we have, and I'll stand for any questions anyone might have about upcoming holiday events.

Chair Levine said thank you, Molly. I'm part of the Holiday Train Committee, and hopefully the weather will be really nice and we'll all be comfortable with a little bit of snow on the ground.

Director Olson said Molly, I have a question. The Holiday Train created a $125,000 goal, that's a lofty goal; for perspective, roughly, do you know last year, for 2024, what we all raised?

Molly replied I do. The last couple years we've been over the $200,000 mark that we've been able to donate to the Friends in Need Food Shelf. So, we like to set an achievable goal, and our goal has been $100,000, so we upped it this year, and we are on track to make that as well. Kind of the heartwarming part of it this year, looking at it last week at our meeting, it has been a lot of personal donations this year, which we haven't seen in years past, but a few big and just medium-sized personal donations from residents in the City kind of touched all of us last week. You know, usually there's those big-name businesses, but lots of personal donations coming in this year, so far.

Director Olson said compliments to you and your staff. That's a nice amount of money.

Molly replied thank you, and I'll pass that along at our next meeting for sure.

Director Olson said and my next question is the warming house from Park and Rec, for those hours, where would someone find that? Is that on the website, I'm guessing, since that's Park and Rec?

Molly replied yes, so, on the City of Cottage Grove website, under Recreation, and then warming houses, all of the sites are listed on there. So, traditionally, we host at eight different sites so you're going to find one in your community or your neighborhood where you live. Weekdays, the buildings are open by 3:00 p.m., and staff starts shutting them at about 9:00 p.m.; weekends are about 11:00 a.m. to 9:00 p.m. as well. So, we have some pretty good, consistent hours, and we're encouraging people to get out to use the trails, the sledding hills, the skating rinks, and then bop in if you need to; you can use the restrooms or warm up or use the drinking fountains. All of those are open for use.

Director Olson asked free of charge? Molly replied free of charge, yep. Director Olson said thank you, Molly replied you're welcome.

Chair Levine said I'll make one other mention, Small Business Saturday is also on November 29, so let's make sure we're all shopping local that day.

Molly replied awesome. Thank you, everyone, happy holidays.

## 7. BUSINESS ITEMS

### A. 2025 Food Truck Festival Recap

Jaime Mann, Assistant to the City Administrator, said thank you, Members of the Board. I'm here to talk about all the great things that happened this year at the Food Truck Festival that happened September 13 at Kingston Park.

So, we planned on 35 food trucks, and we had 35 food trucks that registered with us. Unfortunately, we did have one that broke down on the way to the event, so we ended up having 34 trucks in the parking lot, which we think is kind of about the right size for our event moving forward. On the screen in front of you, you can see the list of food trucks that participated, they offered great food throughout the day, and there were long lines at all of them so we figured it was a success. We're estimating, and obviously it's not an exact science to estimate how many people attended the event because you have so many entrances and so many people coming and going, but we're estimating between 13,000 and 15,000 people attended this year. So, we're really happy with the turnout and heard some great feedback from our food trucks.

We brought in $14,000 in revenue from food truck registrations. We also support the event with sponsorships, and on the screen you can see the list of sponsors; we had both paid and in-kind sponsors. Our goal this year was to get about $8,000 in sponsorships, and we came in at $6,500 in paid sponsorships.

We also had our Marketplace for the second time this year. We had a goal of 15 vendors participating, last year we had 17 vendors in our Marketplace, and we ended up with 27 total Marketplace booths. So, we were happily surprised with the increase in Marketplace vendors this year; we heard great feedback from them as well, and we brought in about $3,000 from the Marketplace vendors.

There were many other things going on at the Food Truck Festival:

- Strawberry Fest Ambassadors hosted some carnival games for us for part of the event
- Bounce Houses
- Beer Tent hosted by the Cottage Grove Lions Club
- Live Music: Basic and Boring, and Revved Up! Came back, they were here for our first year and then came back for our third year
- *Discover Cottage Grove* booth, where some of you helped us hand out swag and talked with a lot of people at the event

It turned out to be a fantastic day, with fantastic numbers:

Food Truck Festival 2025 Profit and Loss Numbers

| | | | |
|---|---|---|---|
| Estimated Revenue: | $23,500.00 | Actual Revenue: | $23,744.94 |
| Expense | $20,600.00 | Actual Expense: | $18,804.11 |
| Estimated Profit | $ 2,900.00 | Actual Profit: | $ 4,940.83 |

Jaime said that money gets rolled back into the CVB budget to pay for additional marketing activities throughout the year. So, with that, I'll be happy to stand for any questions.

Director Haatvedt asked how many vendors do we look for, for the Marketplace vendors? I mean, how many can apply or how many can, I guess how much room do we have for that?

Jaime replied we don't have a cap on the number of vendors that we would take. We have a great big open field where we could place a bunch of Marketplace vendors, so we reach out and Becca did a great job of finding new vendors to come in this year. So, we're always hoping people will spread the word and kind of share that we're looking for Marketplace vendors, but we have no cap on what we could take at this point. Maybe as we get too big one year, then we might have to cap it, but.

Chair Levine said I'll add to that, this was fantastic, what we were able to achieve in one year; and we had a lot of Chamber members mentioning, oh, we should have known about this. So I think that's really grown, it was a fantastic day.

Director Olson said as I recall, weren't the hours tweaked this year? Maybe we hedged an hour here and there for open, close? Is that true? And then how was that accepted?

Jaime replied yes, we did; last year, we went until 7:00 p.m., and for vendors cleaning up, it was dark in the park without a whole bunch of lights for them to see. So, we did shorten the hours, we went back to our initial hours that we did our first year and we closed at 6:00 p.m. Open time was still the same, at 11:00 a.m., but we closed at 6:00 p.m. It seemed to be well received by vendors. The first year I heard a couple people ask if we could do longer, which is why we extended the hours, but I think once people realized it gets dark early in September, I heard no issues with closing at 6:00 p.m. this year.

Director Olson said okay, fair enough. Thanks.

Chair Levine asked if there were any further questions, none were asked.

**B. 2026 Visitor Guide**

Courtney Pirsig, Communications Specialist/Graphic Designer, said Good Morning, Members of the Board. I am excited to share the Visitor Guide, it is currently in its draft state, but you do have a copy in front of you. So, if you want to flip through it and kind of look at what we'll be talking about. So, as you know, the CVB's overall mission is to promote Cottage Grove as a premier destination for travelers, weddings, and outdoor enthusiasts. We also focus on recognizing Cottage Grove as a host city for meetings, conventions, and sporting events.

For the 2026 Visitor Guide, we kept the CVB's mission, as well as our findings with our strategic partner, Chandlerthinks, at the forefront when planning the content for the item. We are currently undergoing a lot of style rebrand, and Phil will talk a little bit more on that when I'm finished; but part of that rebrand consisted of solidifying our brand guidelines for *Discover Cottage Grove*. This ensures consistency, and it creates an identity for *Discover Cottage Grove*. As you can see, not a whole lot has changed. We have the same logo, we're using a similar color palette, similar fonts, but it more so was put in place to define what the brand is, and that helped our website designer kind of follow those guidelines when she was creating the website.

So, when thinking about what we were going to put in this year's Visitor Guide, we asked ourselves what makes Cottage Grove unique? What are our strengths? Why do people come here? And, so, the guide is thoughtfully designed in a way that people will find our strengths in the beginning of the guide; we offer top attractions, I think it is on Page 3 or 4. We have sample itineraries so when people are here, they can look at that and get ideas of what to do when they're here. We made it personal. This year it is all

our people's faces, our places, we used photos that we took as staff, we used photos from photo contests that residents submitted, we used photos from our businesses, so that just made it a little more personal. We aren't using stock photography, these are our places and our people.
Our articles are actionable, there are ready-made itineraries for their visit, like I mentioned, a list of top attractions, and then easy to use, resourceful information. We struck down the information that they don't need to direct them straight to the source, like the businesses' websites, or if you need to contact them, you have a phone number, we included that.

Then new this year are scannable QR codes that direct readers to booking links, business directories, blog articles, and more. With our new website, we wanted to make sure that we were directing people to relevant information. The information is we update the website daily, as with a print article, you don't always get the most up-to-date information. So, we made sure that with the scannable QR codes, you can go direct to the time sensitive information.

This year, we focused on the structure and the flow of the guide. We strategically placed top attractions and itineraries at the beginning, like I had mentioned before. We also implemented the new branding guidelines and applied the new fonts and colors, this kind of unifies the website with the Visitor Guide and all of our other marketing materials. This year we do have a longer guide as well, I believe I had it at about eight pages, so a lot more content, but we chose a paper weight that is lighter, so that cost savings actually makes up for those eight pages, so we're spending about the same that we did last year. And I do want to mention we aren't losing paper quality, its just a different material, and I have a sample if you guys would like to take a look later, too. The paper type chosen closely aligns with what other Visitor Bureaus are doing, too. So, part of my process when I design it is I just take 50 to 100 printed materials, usually Visitor Guides, and I just look through them and I look at them and I kind of take it all in, like a sponge, and I just was noticing that more of the Visitor Guides were more like a magazine type of material. So, the paper we chose is in between what we did last year and the previous years and like a very thin magazine material; and, I also want to mention, its easier to roll up to stick it in your purse or your pocket when you're traveling, so that makes it more functional as well, its not as heavy.

<u>Quotes for 2026</u>

So, the guide is full color, 24 pages, and cover. This year we have six ad placements for a total of $3,010. Quotes were submitted by two local print companies, Graphic Design, Inc. and Ideal Printers, Inc., and pricing is based on quantities of 6,000, 7,000, and 8,000. Last year, we ordered 7,000 booklets, and we have a handful of guides left until the 2026 edition, in case we have any Welcome Centers ordering boxes, or residents or businesses ordering guides.

So, with that, a Recommendation is in front of you, and I would be happy to stand for any questions regarding the design or the pricing of the 2026 Visitor Guide.

Chair Levine said well, Courtney, I'll start by saying once again this is just beautiful. It's a beautiful magazine and its so well thought out, I can't wait to see it in real life. So, are there any questions? I'll open it up for questions or comments.

Director Grecula said I really like the personalized photography, and I have one question. I noticed you made reference to a few attractions and events that aren't within Cottage Grove. Do we have any kind of partnership with like Afton, for example, to get featured in their guide?

Courtney replied that's an excellent question, Director Grecula. Afton Apple did purchase an ad placement; so, anywhere that you do see kind of a logo and contact information or a bold content for that business, it is an ad placement. So, they did purchase one this year, and they have been in previous editions in the past. I know in the back of the guide I have recommendations for people to kind of travel outside of Cottage Grove, but still come back to us of course, and those are not paid; but it's more so like a recommendation, like hey, we're only 20 minutes from the Mall of America. You could stay here and then pop over to the Mall of America, but we're very much a commerce-based city, so that's just like to give examples of like what they can do when they're here.

Director Grecula said that makes sense, thank you.

Director Olson said I'll make a comment. I've noticed and I like this, the print quotes, you obtained two quotes, they're local. I see a Cottage Grove internet address, which I like, and also the physical printing of it looks like this is in the southeast metro, which is also I think important to know. Thanks for doing that.

Courtney replied, yeah, thank you for your comments.

Chair Levine said thank you, and with that, I'll ask for a motion to approve the quote for the printing of 7,000 copies of the 2026 Visitor Guide through Graphic Design, Inc. for $6,286.

**Director Haatvedt made a motion to approve the quote for the printing of 7,000 copies of the 2026 Visitor Guide through Graphic Design, Inc. for $6,286; second by Director Olson. Motion carried: 5-0.**

**C. CVB Website Redesign Update**

Good Morning, Members of the Board, my name is Phil Jents, Communications Manager. I'm happy to stand before you to give you a brief update about the website rebrand. As you all certainly know and recall, we have talked about the website a couple of times before, over the summer, and its need to undergo a design refresh. Courtney helpfully mentioned the branding guidelines that we had established. And, so, the website redesign, in addition to giving it a refresh, will hopefully also achieve kind of branding consistencies across products that we create, social media, the Visitor Guide, and the website, all kind of living as one branded ecosystem, if you will.

So, we're excited about the website rebrand. I want to kind of give you just a quick kind of background of where we've been and where we're at. So, that website rebrand is currently in progress. Staff received an early draft of that website redesign on about October 22; staff met and comprised a lengthy list of edits and revisions that we wanted made, which is not unusual, I mean, we want to get this right. When the City enterprise main, cottagegrovemn.gov, went through a recent rebrand and redesign, the same thing happened. You get a bunch of different versions, and staff kind of goes to the drawing board and creates a long list of edits and revisions; because, again, if you're going to do it, you want to do it well and get it right. And, so, we added a list of edits, as well as what we're calling a "Wire Frame," so basically a visual representation of all of those edits, so that both in language and in visual, our web designer can see what it is that we're looking for. So, it's easier to kind of just drag and drop images into what we are hoping to get done, which is exciting. Those images were provided on about October 30, and they're being worked through kind of as we speak. So, we're waiting on that next round of revisions to be incorporated into the new design.

As we have planned all along, and I'm sure I have mentioned, before anything goes live, we would of course seek final Board feedback and blessing on that substantially complete, if not fully completed, website redesign. So, that can be done in a few ways, either at a future workshop at a regularly-scheduled Board Meeting, a Special Meeting that maybe we can schedule, either virtually or in person, or it could even be over email, if that is sufficient. Either way, we would not want to go live on a new website before you all have a chance to see it and approve it and provide feedback. The same with the Visitor Guide, right, we wouldn't print it and send it out without you all seeing and approving it. So, we are looking forward to that future date where you see the full completed redesign and provide us your feedback before we go live on that.

Phil said with that, I'm happy to stand for any questions on that.

Chair Levine asked the directors if there were any questions, and they had none. She asked do we have an idea of when that date will be? Is it something that's weeks or months away?

Phil replied that's a good question. I think initially we had hoped to have the website done and ready to go live by the end of the year, I do still think that is achievable. Having said that, it all kind of depends on what we all decide is the best way to get your final feedback from the Board. Our next regularly-scheduled Board Meeting is in February, and so, again, you want to do this and do it right, and perhaps the cleanest, easiest way to get your feedback is in a workshop setting at that meeting, but I also recognize that's in February. If we do want something sooner than that, I think that's achievable, at which point we have to just kind of figure out if we want to schedule a Special Virtual Meeting, which is something that we could possibly do and get your feedback before then. I'm open to suggestions, I think all of us would love to have it go live sooner, rather than later, but also recognizing that we want your meaningful feedback as a part of that process, too.

Chair Levine said all right, any suggestions on that? None were offered. She stated all right, thank you.

**D. Minnesota Department of Revenue Lodging Tax Collections and Rentalscape Software Update**

Phil said thank you, and that title is a mouthful, I recognize. It is still interesting information, and I thought it would be good for the Board to hear an update. You've heard me mention before that the Minnesota Department of Revenue was going to be conducting Lodging Tax Collections on behalf of this City, and you've also heard me mention before that we have engaged with Deckard Technologies, utilizing the Rentalscape software, both of which are in place now. So, the Department of Revenue is collecting Lodging Tax collections on behalf of the City of Cottage Grove, and the Rentalscape software is up and running, and our staff has been using it. So, again, we thought it would be prudent to provide you all with an update on how that's going.

So, as a background, the Department of Revenue Lodging Tax Collections began in July, 2025, and we are monitoring that closely; we want to make sure that Lodging Tax collections are coming in as we would expect them to be, that they are meeting projections and not exceeding them, and so far, that is the case. The Lodging Tax Collections are coming in as expected, if not maybe a touch higher than we would have thought, which is, of course, a good sign.

It's also important to note that the collections do lag a little bit, which was expected. When we explored this scenario, we worked with other communities who have also done Department of Revenue Lodging Tax Collections, and they reported that they experienced about a 40-day lag, which does kind of follow some logic, right? So, the property submits their Lodging Tax Collections to the State, the State then receives them, and then the State disburses them to the City, and all of that takes a little bit of time. So, that's not unexpected, that's what we expected going in, but nevertheless, as future Lodging Tax Collections updates happen at the Board level, know that that's the case, it does fall behind about 40 days.

In 2025, Q3, which is on the agenda this morning, you'll get an update from me on those Collections, and we're seeing that that two-month average does appear to be coming in slightly higher than a two-month average from 2024. So, again, staff wanted to monitor very closely how these Lodging Tax Collections are going. We didn't have any reason to believe they wouldn't come in "normally," but you know, trust but verify. So, we're seeing that Lodging Tax Collections are coming in as we would expect and maybe even a touch higher, which is good to see.

<u>Rentalscape Software Update</u>

This is the software that goes out and identifies short-term rental, long-term rental properties out in the world, making sure that the City is aware of our rental properties out in the community. As you probably know, many communities experience short-term rentals that exist out in the community, they're being advertised on Airbnb, VRBO, and other such websites, and sometimes cities aren't aware that those properties exist. Sometimes those properties aren't licensed properly, and so the City thought it a good idea to make sure that we have a good understanding of what exists out in our community, to ensure that those are inspected properly, that they're held to safety and Code requirements and licensure requirements.

So, to date, staff is finding that Rentalscape has identified 11 licensed short-term rental properties in Cottage Grove, 10 unlicensed short-term rental properties, and 22 total unlicensed properties, which could include long-term rental properties.

As a result, the City's Code Compliance Officer is going to soon be sending compliance letters to those properties that are unlicensed, to ensure that they're coming into compliance. Just one note on that: Ideally you would see everyone compliant and licensed properly, and of course we're getting Lodging Tax Collections. It's yet to be clear how moving forward this might or might not impact Lodging Tax Collections; just because a property is not licensed doesn't necessarily mean they're avoiding Lodging Tax Collections to the State. So, it's good to have an early understanding of what Rentalscape is finding out there and good that our Code Compliance Officer will be getting folks into compliance. We'll also then be looking at does that have any impact on our Lodging Tax Collections; i.e., does it go up, because people are now coming into compliance? So, that's kind of the next step in this software.

Phil said with that, I'll stand for any questions you may have.

Director Reese asked regarding that last slide you had with the 10 unlicensed and the 22 total unlicensed, what's the difference between those numbers?

Phil replied Chair Levine, Director Reese, that's a good question. So, the 10 unlicensed short-term rental properties, those would be what I would consider like your Airbnb or VRBO. The 22 total unlicensed properties could include like long-term rentals, so we'll call it a traditional landlord renting out their property to somebody under a lease agreement for month-to-month or year-to-year, whatever that might be. That doesn't necessarily have much, if any, impact to the Lodging Tax Collections, but it's still important for our staff to know that so that they are licensed and inspected and held to the same standards as everyone else.

Director Grecula said asked what defines a short-term rental that would make it eligible for Lodging Tax vs. a long-term rental?

Phil replied Chair Levine, Director Grecula, that is an excellent question, and I don't know that I'm going to be able to come up with the exact, correct answer off the top of my head. I'll look to maybe City Administrator Levitt, if she knows, but it's the determination of how long the stay is, and I don't want to speak out of turn of what that cutoff is, like 30 days, 45 days, whatever it is, but that is a good question.

Administrator Levitt replied Madam Chair, Members of the Board, I believe the Code reads 30 days. So, if it's over 30 days contiguous stay, you're then into a long term. If it's less than 30 days, it's a short-term rental.

Director Grecula said thank you.

**E. 2025 Q3 Lodging Tax and Revenue Collection**

Phil Jents said Chair Levine, Members of the Board, again thank you, you're hearing a lot from me this morning, so for better or worse, here I am.

The Quarter 3 Lodging Tax and Revenue Collection update we have before you. And, so, the Minnesota Department of Revenue is collecting our Lodging Taxes on behalf of the City. So, for Quarter 3, we're seeing those coming in at $15,392, which, as I stated earlier, is about what we would expect to see in Quarter 3 Lodging Tax Collections and perhaps even a touch higher than a two-

month average when compared to 2024. So, that was a pretty key important thing for us to look at again are those collections coming in as we would expect.

Before I move on to questions, I did want to note the projected Quarter 3 Lodging Tax Collections in the previously-approved budget was $18,000. So, that Quarter 3 number that you see before you, I mentioned that lag time that we experience, and the City has not yet received September's Lodging Tax Collections because of that lag time. So, we would expect that collection come in before the end of this year yet, which of course then the number that you see before you will go up once we get those. And, so, we are confident that the Quarter 3 Lodging Tax Collections will meet or exceed our projected amount that we would have expected to see. Year to date, we're sitting at about $62,955 in Lodging Tax Collections, and I thought both numbers were important for you to know.

Chair Levine replied thank you for explaining that, it totally makes sense. She asked if there were any questions or comments on this item.

Director Reese asked do you have a year-over-year for comparison?

Phil replied Chair Levine, Director Reese, I do not have that information immediately in front of me, but I would be happy to follow up.

**F. 2026 Final Budget Approval**

Phil Jents said Chair Levine, Members of the Board, thank you again. Last, and certainly not least, is the Budget Approval for 2026. So, the 2026 Final Budget is before you, in your packet, as is the full 2026 Budget Worksheet. So, I'll not bore you with reading that entire spreadsheet, but I would happily do so if you wish; I'm sure maybe you have other things to consider as you move on for the rest of your day.

At any rate, as you also just heard, the Lodging Tax Projections for 2026 are similar to other years. We based that on a 63% occupancy rate, which gets us in at around $71,500 a year for our Lodging Tax Projections. Projected Visitor Guide Ad Sales come in at $4,500. As you heard earlier this morning, the Food Truck Festival is a pretty big premier event for the City of Cottage Grove and the CVB, and that's coming in at $15,900 in food truck and Marketplace vendor payments, and $8,000 from sponsorships. And then you've heard me discuss before, but new this year is the Explore Minnesota Tourism Grant; so, *Discover Cottage Grove* was successful in getting a $2,000 Grant from Explore Minnesota, which we will use towards advertising on social media and online for things like the Food Truck Festival and other kind of summertime food things to market.

Also, similar to other years, we have our expenses broken out in Marketing categories and Operational categories. So, again, I won't bore you by reading all of the numbers on the screen before you, but you have them before you and in your packet. The Total Marketing Expenses in the 2026 budget come in at $56,369.36 for things like, as you see, Website Hosting, Printing, Marketing, etc. Under Operations, for things such as portions of the Communication Specialists' salary, Postage, Dues and Subscriptions, etc., Operating Expenses come in at $52,680.63.

Finally, the 2026 Final Budget Total Revenue Projections come in at $101,950, Expenses come in at $109,449.99, which shows a $7,499.98 Loss. A quick note on that and an important note on that final number, that will be reconciled with either the remaining Fund balance, which currently is at $65,440 and/or expenditure reductions.

So, with that, there is a Recommendation before you, and I'd be happy to stand for any questions; there were no questions or comments.

**Director Grecula made a motion to approve the Cottage Grove Convention and Visitors Bureau 2026 Final Budget; second by Director Olson. Motion carried: 5-0.**

## 8. WORKSHOP - None.

## 9. CVB COMMENTS

Director Reese said I like the idea of doing a virtual workshop to be able to go through the website. It may take an hour to do so, but I think it would be good for us to know the functionality and if there's anything we, as a Board, could look at and say, that works great, that doesn't work great, I'd love to do that.

Chair Levine said thank you, I'm also open to that. Everybody else as well? The other Board Members agreed. She said great, thank you so much.

Chair Levine said our next meeting is Tuesday, February 24, 2026.

10. ADJOURNMENT

**Director Haatvedt made a motion to adjourn; second by Director Grecula. Motion carried: 5-0. The meeting was adjourned at 8:13 a.m.**

Respectfully submitted,

_____
Phil Jents, Communications Manager

/jag

# City Council Action Request

# 7.E.

| | |
|---|---|
| **Meeting Date** | 3/4/2026 |
| **Department** | Administration |
| **Agenda Category** | Action Item |
| **Title** | Planning Commission Appointments - Madison and Fischer |
| **Staff Recommendation** | Appoint Bradley Madison to the Planning Commission with a term ending on February 29, 2028, and appoint Commissioner Jessica Fischer to the Planning Commission Chair position through February 28, 2027. |
| **Budget Implication** | N/A |
| **Attachments** | 1. Memo - Planning Commision Appointment (Madison & Fischer ) |

| | |
|---|---|
| **To:** | Honorable Mayor and City Council Members<br>Jennifer Levitt, City Administrator |
| **From:** | Tamara Anderson, City Clerk |
| **Date:** | 2/26/2026 |
| **Subject:** | Planning Commission Appointments |

---

**Discussion**

Councilmember Olsen serving as the Council Liaison for the Planning Commission for 2026, interviewed Bradley Jay Madison for a vacant seat on the Planning Commission and recommends his appointment to serve a two-year term beginning on March 1, 2026.

His qualifications include firsthand experience navigating municipal regulations and long-term planning as a local small business owner in Cottage Grove. Mr. Madison operates a wedding and event center, providing him with a practical understanding of how local decisions impact the economic health of our community. Additionally, his background includes volunteering on the Afton Alps Ski Patrol and supporting local government and nonprofit organizations.

Councilmember Olsen also recommends the appointment of Commissioner Jessica Fisher to the position of Planning Commission Chair. Ms. Fisher currently operates as a local business owner and Realtor. Her professional background and her time serving on the planning commission provides her with a deep understanding of planning, zoning, and the local real estate market, which she aims to utilize as an asset to the community.

**Recommendation**

Appoint Bradley Madison to the Planning Commission with a term ending on February 29, 2028, and appoint Commissioner Jessica Fischer to the Planning Commission Chair position through February 28, 2027.

.

# City Council Action Request

# 7.F.

| | |
|---|---|
| **Meeting Date** | 3/4/2026 |
| **Department** | Administration |
| **Agenda Category** | Action Item |
| **Title** | ACHP Commission Appointments - McDermott and Doheny |
| **Staff Recommendation** | Approve the appointment of Joseph McDermott and Mary Doheny to their first terms on the Advisory Committee on Historic Preservation, effective March 1, 2026, and ending February 29, 2028. |
| **Budget Implication** | N/A |
| **Attachments** | 1. ACHP Appointment Memo 2026-2-25 |

| | |
|---|---|
| **To:** | Honorable Mayor and City Council Members<br>Jennifer Levitt, City Administrator |
| **From:** | Max Erickson, Planner |
| **Date:** | February 26, 2026 |
| **Subject:** | Advisory Committee on Historic Preservation Appointments |

**Discussion:**

The City of Cottage Grove formally acknowledges the significant contributions of the dedicated community members who serve on our municipal commissions and committees. These individuals play a vital role in shaping our city's future by providing essential counsel to Staff and the City Council on a wide range of policy issues.

The Advisory Committee on Historic Preservation currently has 2 open seats. Applications have been received from Joseph McDermott and Mary Doheny. Both applications have been reviewed by Council Member Theide and Community Development Director Emily Schmitz. Both Applicants have been interviewed by Planner Max Erickson.

Joseph McDermott comes to this committee with a strong interest in historic preservation of Cottage Grove. He is interested in historical research and has a legal background which has a strong emphasis on property law.

Mary Doheny is a retired RN who is very involved in the community. She has lived in the community for 42 years. She volunteers at the local food shelf and serves as a Master Gardener for Washington County.

**Staff Recommendation:**

Approve the appointment of Joseph McDermott and Mary Doheny to their first terms on the Advisory Committee on Historic Preservation effective March 1, 2026, and ending February 29, 2028.

# City Council Action Request

# 7.G.

| | |
|---|---|
| **Meeting Date** | 3/4/2026 |
| **Department** | Administration |
| **Agenda Category** | Action Item |
| **Title** | Lower Potency Hemp Edible Retailer License — G-Will Liquor |
| **Staff Recommendation** | Approve the Lower Potency Hemp Edible Retailer License to Cherokee Liquors (DBA G-Will Liquors) at 6999 80th Street South, Cottage Grove. |
| **Budget Implication** | N/A |

**Attachments**

| | |
|---|---|
| 1. | G-Will Liquor (Low Potency THC) Memo |
| 2. | G-Will Liquors Cannabis Registration Background |
| 3. | OCM Email (confirming license) |

| | |
|---|---|
| To: | Honorable Mayor and City Council<br>Jennifer Levitt, City Administrator |
| From: | Tamara Anderson, City Clerk |
| Date: | December 8, 2025 |
| Subject: | Cherokee Liquors (DBA G-Will Liquor) - Cannabis Lower-Potency Hemp Edible Business Registration |

---

**Introduction**

Cherokee Liquors (DBA G-Will Liquor), has applied for a cannabis lower-potency hemp edible business registration for its location at 6999 80th Street South, Cottage Grove.

This application follows regulations for cannabis and lower-potency hemp edible retail businesses, as adopted in Ordinance 1089 on December 4, 2024.

The city ordinance requires all applicants to meet specific performance standards to be granted a cannabis lower-potency hemp edible business registration. Cherokee Liquors (DBA G-Will Liquor) has met the following requirements:

- Zoning: To meet zoning requirements, the applicant must obtain a Conditional Use Permit (CUP).
- Fees and Taxes: The applicant has paid the required $250 registration fee, which covers the first year and the first renewal.
- The applicant is current on all property taxes, assessments, and other city fees.
- State License: The business holds a preliminary state license from the OCM for the requested operations (OCM License LPDIS-L25-000482).
- Background Check: The applicant has passed the necessary background check.
- Inspections: The business agrees to be open to inspection by local law enforcement or other authorized city officials during regular business hours. The city will conduct compliance checks at least once a year.

The registration is only valid for the specific, contiguous space detailed in the application.

**Staff Recommendation**

Staff recommends the approval of the Cannabis Lower-Potency Hemp Edible Business Registration G-Will Liquors (6999 80th Street South).

| | |
|---|---|
| **To:** | Director of Public Safety Peter J. Koerner |
| **From:** | Community Impact Sergeant Mike McCormick |
| **Date:** | October 22, 2025 |
| **Subject:** | G-Will Liquors – Lower-Potency Hemp Edible Retailer |

---

## APPLICANT/ PRESIDENT & CHIEF EXECUTIVE OFFICER

Grant William Rademacher
7007 River Road Southeast
Clear Lake, Minnesota 55319

## TREASURER & CHIEF FINANCIAL OFFICER

James Frank Kast
9603 Polaris Lane North
Maple Grove, Minnesota 55369

## CHIEF OPERATING OFFICER

Daniel Charles Fields
19429 Zumbro Court Northwest
Elk River, Minnesota 55330

## INTRODUCTION AND BACKGROUND

On September 30, 2025, Grant William Rademacher applied with the City of Cottage Grove to be a lower-potency hemp edible retailer at the business, G-Will Liquors, at the address of 6999 80th Street South, Cottage Grove, MN, 55016. Rademacher is listed as the business's President and Chief Executive Officer (CEO). The application also contained two other partners associated with the business: James Frank Kast is listed as the Chief Financial Officer (CFO) and Daniel Charles Fields as the Chief Operating Officer (COO).

The application was submitted containing signed General Releases of Information, photocopies of a Minnesota driver's licenses, Certificates of Compliance, and Certificates of Liability Insurance. The Department of Public Safety is required to conduct a police records review of the applicant.

## ORGANIZATIONAL INFORMATION/ NARRATIVE

During this investigation, I found that Rademacher is the Director of Rademacher Family Partnership LLLC. This information is observed in the Minnesota Secretary of State Business Registration Directory. This LLLC in Minnesota is listed as a Limited Partnership (Domestic) filed on December 26, 2001. The company's filing status is listed as **Active**, and its File Number is **LP-11177.** Kast is listed as the registered agent.

Rademacher Family Partnership LLLC has a listed business address of 13973 Round Lake Boulevard, Andover Minnesota 55304. The Anoka County (Minnesota) Business Registration Records verify the LLLC as active, with a listed record type of ABSTR. No delinquencies, forfeiture proceedings, or bankruptcy proceedings noted.

## CRIMINAL/POLICE CONTACTS-APPLICANTS

A criminal history background check utilizing BCA, MGA, ACCURINT, and OSINT were run on Rademacher, Kast and Fields. No areas of concern were noted.

Upon running the attached copies of the Minnesota Driver's Licenses that were provided, it showed regular Class D Licenses with no restrictions for the three applicants. Nothing observed in the last, five year, "lookback" period and no felony convictions. Nothing of concern is noted in their criminal history reports.

Nothing noted that would prohibit Rademacher, Kast or Fields from obtaining a license to sell low potency THC in the City of Cottage Grove.

## SOCIAL MEDIA

I, along with our Crime Analyst, completed a search for social media related to Rademacher, Kast and Fields and their related businesses. Nothing of concern noted or anything that would project poorly on the City of Cottage Grove was observed

## DISCUSSION

The application, as submitted, is in compliance with our ordinance. I did note that a copy of the Office of Cannabis Management for the Business is not included in the application. Cottage Grove City Clerk, Tamara Anderson, did make note of this upon the reception of the application. **This application will need to be included before it can be approved.**

The Zoning/Planning Approval is not included in this packet but has been submitted.

We have investigated the applicants and have not found any facts which would constitute a basis for denial under the provisions of the City Ordinance.

It should be noted that the Premises Security Plan was submitted, through a Planning Application, and was approved prior to receiving the initial application.

**CLOSING**

I have completed a thorough background investigation on Grant William Rademacher, James Frank Kast and Daniel Charles Fields. I could find no information which would preclude them from holding a license to sell Low Potency THC in the City of Cottage Grove or information which would bar them, or the established business of G-Will Liquors, from functioning in such capacity.

All files and/or forms received, including any reports created, have been added to our records under Cottage Grove events number: **CG-BC-250033**

Community Impact Sergeant Michael McCormick
Background Investigator

Detective Sergeant Michael McCormick
Background Investigator

**From:** NoReply@accela.com
**To:** Tammy Anderson
**Subject:** Lower-potency hemp edible license LPDIS-L25-000482 issued in your jurisdiction
**Date:** Tuesday, February 24, 2026 1:28:04 PM

You don't often get email from noreply@accela.com. Learn why this is important

**EXTERNAL EMAIL WARNING:** This email originated from an outside organization. Do not click links or open attachments unless you recognize the sender and know the content is safe.

Dear Tamara Anderson,

The Office of Cannabis Management has issued a Lower-Potency Hemp Edible Retailer License to Cherokee Liquors Inc., a business located in your jurisdiction at 6999 S 80th Street, Cottage Grove, MN 55016. Its license number is LPDIS-L25-000482.

For more information about lower-potency hemp edible (LPHE) licensing, please review Hemp Businesses in Minnesota: A guide for lower-potency hemp edible license applicants. Businesses can obtain multiple lower-potency hemp edible licenses.

**Important for LPHE retailers: Local retail registration**
**In addition to receiving their license from OCM, LPHE retailers who will conduct retail sales of LPHE products must apply for and obtain local retail registration directly from their local government**. Each local government with retail registration authority is responsible for implementing and facilitating their own local retail registration process. If you are a township or city that has instead elected to delegate retail registration authority to a county, you should ensure the county has received this information about licensure so they can issue a local retail registration to this newly licensed business.

**Please note, a local government *may not* limit the number of local retail registrations issued to LPHE businesses in their jurisdiction**. This is different than local retail registrations for cannabis retail businesses, which may be limited.

Please see Minnesota Statutes, section 342.22, for more information about the local retail registration process. Please also see Page 15 of the Guide for Local Governments on Adult-Use Cannabis and Lower Potency Hemp Edible Licenses (PDF) for more information.

A licensed LPHE retailer with a delivery endorsement only—meaning they do not have a retail endorsement and do not intend to operate a physical retail location—is not required to obtain a local retail registration.

**More information**
For any other questions or concerns, please reach out to local.licensing.ocm@state.mn.us or visit OCM's webpage (mn.gov/ocm).

**Licensed LPHE businesses are required to comply with state and local building, fire, and zoning codes, requirements, and regulations**. Local governments should use the Enforcement Complaint Reporting Form to share information, concerns, or complaints about cannabis businesses under the local government expedited complaint process (Minnesota Statutes section 342.13).

Thank you,
Minnesota Office of Cannabis Management
local.licensing.ocm@state.mn.us

# City Council Action Request

# 7.H.

| | |
|---|---|
| **Meeting Date** | 3/4/2026 |
| **Department** | Administration |
| **Agenda Category** | Action Item |
| **Title** | Temporary Gambling License - Phoenix Residence |
| **Staff Recommendation** | Authorize issuance of a single-occasion gambling permit to Corrie Lynn Kopischke on behalf of Phoenix Residence, to conduct a raffle at River Oaks Golf Course (11099 Hwy 61, Cottage Grove) on June 8, 2026, from 12:30-6:00 PM. |
| **Budget Implication** | N/A |
| **Attachments** | 1. Public Safety - Memo |

Cottage Grove
Where Pride and Prosperity Meet

Department of Public Safety
Police • Fire • EMS

**To:** City Administrator Jennifer Levitt

**From:** Director of Public Safety Peter J. Koerner PJK

**Date:** February 20, 2026

**Subject:** **GAMBLING LICENSE APPLICATION – SINGLE OCCASION**

---

INTRODUCTION

Under State Statutes, four types of nonprofit organizations are eligible to conduct lawful gambling in Minnesota (fraternal, religious, veteran, and other nonprofit) and most events, with the exception of certain raffles, require obtaining either an exempt or an excluded permit from the Minnesota Gambling Control Board. Permits issued by the Minnesota Gambling Control Board require approval of the local government authority where the event will be held.

The Public Safety Department investigates single-occasion gambling permit applications and provides the City Council with a recommendation on whether a permit should be issued. If the City Council authorizes issuance of a permit, the City Clerk signs off on the application and forwards it to the Minnesota Gambling Control Board or issues the permit itself if none is required by the Gambling Control Board.

BACKGROUND

Pursuant to City Ordinance, Corrie Lynn Kopischke, on behalf of The Phoenix Residence, Inc, 222 Plato Boulevard E, St. Paul, MN 55107 has submitted an application for a Temporary Single Occasion gambling permit to be held at River Oaks Golf Course, MN 55016 on June 8, 2026, from 12:30pm to 6:00pm. The Department of Public Safety is required to conduct a police investigation of the applicants.

DISCUSSION

The application as submitted is complete in compliance with our ordinance and is exempt from the licensing requirements of the Minnesota Charitable Gambling Control Board.

We have investigated the applicants and have not found any facts which would constitute a basis for denial of this application, under the provisions of the City's Gambling Ordinance.

RECOMMENDATION

Recommend that the City Council approve the single occasion Gambling Permit application for The Phoenix Residence, Inc.

Peter J. Koerner – Director of Public Safety 02/20/2026

# City Council Action Request

# 7.I.

| | |
|---|---|
| **Meeting Date** | 3/4/2026 |
| **Department** | Administration |
| **Agenda Category** | Action Item |
| **Title** | Temporary Gambling License - Accacia Lodge No. 51 |
| **Staff Recommendation** | Authorize issuance of a single-occasion gambling permit, David Gene Martin, on behalf of Accacia Lodge No. 51, to conduct a raffle at 11094 70th Street South, Cottage Grove, on October 3, 2026, at 6:00 PM. |
| **Budget Implication** | N/A |
| **Attachments** | 1. Public Safety Memo |

Cottage Grove
Where Pride and Prosperity Meet

Department of Public Safety
Police • Fire • EMS

**To:** City Administrator Jennifer Levitt

**From:** Director of Public Safety Peter J. Koerner PK

**Date:** February 20, 2026

**Subject:** **GAMBLING LICENSE APPLICATION - TEMPORARY**

---

INTRODUCTION

Under State Statutes, four types of nonprofit organizations are eligible to conduct lawful gambling in Minnesota (fraternal, religious, veteran, and other nonprofit) and most events, with the exception of certain raffles, require obtaining either an exempt or an excluded permit from the Minnesota Gambling Control Board. Permits issued by the Minnesota Gambling Control Board require approval of the local government authority where the event will be held.

The Public Safety Department investigates single-occasion gambling permit applications and provides the City Council with a recommendation on whether a permit should be issued. If the City Council authorizes issuance of a permit, the City Clerk signs off on the application and forwards it to the Minnesota Gambling Control Board or issues the permit itself if none is required by the Gambling Control Board.

BACKGROUND

Pursuant to City Ordinance, David Gene Martin, on behalf of the Accacia Lodge No 51 has submitted an application for a Temporary Single Occasion gambling permit, to conduct a raffle, to be held at Accacia Lodge No 51, 11094 70th Street South, Cottage Grove, MN 55016 on October 3, 2026, at 6:00pm. The Department of Public Safety is required to conduct a police investigation of the applicants.

DISCUSSION

The application as submitted is complete in compliance with our ordinance and is exempt from the licensing requirements of the Minnesota Charitable Gambling Control Board.

We have investigated the applicants and have not found any facts which would constitute a basis for denial of this application, under the provisions of the City's Gambling Ordinance.

RECOMMENDATION

Recommend that the City Council approve the single occasion Gambling Permit application for the Accacia Lodge No 51.

Peter J. Koerner – Director of Public Safety 2/20/2026

# City Council Action Request

# 7.J.

| | |
|---|---|
| **Meeting Date** | 3/4/2026 |
| **Department** | Administration |
| **Agenda Category** | Action Item |
| **Title** | Washington County Wellness Grant Acceptance |
| **Staff Recommendation** | Approve the grant agreement with Washington County in the amount of $3,000 and authorize the expenditure of the $300 matching contribution. |
| **Budget Implication** | $300 - Community and Employee budget for 2026 |

**Attachments**

| | |
|---|---|
| 1. | Memo SHIP Grant (2026) Accept the Grant |
| 2. | City of Cottage Grove_Worksite_18075 |

| | |
|---|---|
| **To:** | Honorable Mayor and City Council Members<br>Jennifer Levitt, City Administrator |
| **From:** | Tamara Anderson, City Clerk |
| **Date:** | 2/19/2026 |
| **Subject:** | Washington County Worksite Wellness Grant Acceptance |

---

**Discussion**

Following previous Council authorization, the Wellness Committee has successfully secured a Worksite Wellness Partner Project grant through Washington County Public Health and Environment (PHE). Funded by the Statewide Health Improvement Partnership (SHIP), these resources are designated to reduce chronic disease risk by promoting physical activity in the workplace.

While the 2025 cycle focused on "Healthy Eating" via employee gardens, the 2026 agreement shifts focus to "Physical Activity" to increase staff access to movement during the workday.

**Agreement Terms and Funding**

The grant award is for a total amount of $3,000. Per the program requirements, the City is responsible for a 10 percent match ($300) of the total funding.

- **Total Grant Amount:** $3,000
- **City Match (10%):** $300
- **Total Project Value:** $3,300

The Wellness Committee intends to utilize these funds to purchase small fitness equipment, such as walking pads, desk peddlers, and balance boards, to support an active work environment.

**Implementation and Program Sustainability**

To ensure the success and longevity of this program, the Wellness Committee will lead the following implementation initiatives:

- **Equipment Management:** The Committee will oversee an "equipment library," rotating items between departments based on staff demand.
- **Maintenance:** Annual "equipment checkups" will be conducted to ensure all items remain clean and in safe working order.

- **New Hire Integration:** Training on active workstations will be incorporated into new employee orientations to establish a culture of movement from day one.
- **Ongoing Promotion:** The Committee will share "Success Stories" and activity tips via internal newsletters and staff meetings to maintain high engagement.
- **Evaluation:** Success will be measured through monthly utilization logs and a "Sedentary Shift" survey six months post-implementation to track behavior changes and physical comfort.

**Recommendation**

Approve the grant agreement with Washington County in the amount of $3,000 and authorize the expenditure of the $300 matching contribution.

.

Washington County AND City of Cottage Grove

This contract is made and entered into by and between Washington County, hereinafter referred to as "County", and the City of Cottage Grove located at 12800 Ravine Parkway Cottage Grove MN 55016, hereinafter referred to as the Consultant/Contractor".

I. TERM OF CONTRACT

The term of this contract shall be from final signature to October 31, 2026, unless earlier terminated as provided herein.

II. SCOPE OF SERVICES

Contractor shall address the worksite strategy covered under the Statewide Health Improvement Partnership (SHIP) grant for Washington County by the Minnesota Department of Health (MDH) funding as well as perform the duties set forth in this agreement and in Attachment A at a cost set forth in Attachment A which is hereby incorporated into this contract.

Contractor will Increase physical activity opportunities for staff at their workstations by purchasing under desk exercise equipment. In addition, the Contractor will:

- Submit regular invoices to the County for payment of services rendered.
- Act in a fiscally responsible manner, including following standard accounting procedures, charging only for the activities stated in this agreement, spending funds responsibly, properly accounting for how the funds are spent, maintaining financial records to support expenditures billed to the contracting and meeting audit requirements.
- Comply with communications approval processes outlined in the communications guidance and materials document.
- Allow the County, MDH, and others to use any products or materials produced with contracted funds.
- Assist the County with data collection in order to complete and submit required reports, if necessary.
- Assist the County by providing grant summary or other requested information requested for incorporation into state level reports, if requested.
- Work collaboratively with the County to determine a regular communication schedule for questions and progress reports.
- Work with the County on approval for any work plan or budget changes.

III. COST:

Cost will not exceed $3,000.00

IV. INDEPENDENT CONTRACTOR.

It will be agreed that nothing within the contract is intended or should be construed in any manner as creating or establishing the relationship of co-partners between the parties or as constituting the Contractor as the agent, representative, or employee of the County or Public Health & Environment for any purpose or in any manner whatsoever. The Contractor is to be

and shall remain an independent Contractor with respect to all services performed under this agreement.

The Contractor will secure, at its own expense, all personnel required in performing services under the agreement. Any and all personnel of the Contractor or other persons, while engaged in the performance of any work or services required by the Contractor under this agreement shall have no contractual relationship with the County or Public Health & Environment and shall not be considered employees of the County or Public Health & Environment.

V. STANDARDS.

The Contractor shall comply with all applicable Federal law, State statutes, Federal and State regulations, and local ordinances now in effect or hereafter adopted.

Failure to meet the requirements of the above shall be a substantial breach of the agreement and will be cause for cancellation of this contract.

VI. POSSESSION OF FIREARMS ON COUNTY PREMISES.

Unless specifically required by the terms of this Contract or the person it is subject to an exception provided by 18 USC§ 926B or 926C (LEOSA) no provider of services pursuant to this Contract or subcontractors shall carry or possess a firearm on County premises or while acting on behalf of Washington County pursuant to the terms of this Contract. Violation of this provision is grounds for immediate suspension or termination of this Contract.

VII. SUBCONTRACTING AND ASSIGNMENT.

The contractor shall not enter into any subcontract for performance of any services contemplated under this agreement nor novate or assign any interest in the agreement without the prior written approval of the county. Any assignment or novation may be made subject to such conditions and provisions as the county may impose.

If the contractor subcontracts the obligations under this agreement, the contractor shall be responsible for the performance of all obligations by the subcontractors.

VIII. INDEMNIFICATION.

The Contractor agrees it will defend, indemnify and hold harmless the County, its officers and employees against any and all liability, loss, costs, damages, and expenses which the County, its officers, or employees may hereafter sustain, incur, or be required to pay arising out of the negligent or willful acts or omissions of the Contractor/Consultant in the performance of this agreement.

IX. INSURANCE REQUIREMENTS.

The Contractor agrees that in order to protect itself, as well as the County, under the indemnity provisions set forth above, it will at all times during the term of this Agreement, keep in force the following insurance protection in the limits specified:

1. Commercial General Liability with Contractual liability coverage in the amount of $1,500,000 per occurrence with a $3,000,000 aggregate. An excess or umbrella liability policy may be used in conjunction with primary coverage limits to meet the minimum limit requirements.
2. Automobile coverage in the amount of $1,500,000 on a combined single limit basis and include hired and non-owned.
3. Worker's Compensation in statutory amount (if applicable) of bodily injury by accident in the amount of $500,000 each accident, bodily injury by disease in the amount of $500,000 each employee, and bodily injury by disease in the amount of $500,000 policy limit.

Washington County shall be listed as additional insured as it relates to Commercial General Liability and Automobile Liability.

Prior to the effective date of this Contract, the Contractor will furnish the County with a current and valid proof of insurance certificate indicating insurance coverage in the amounts required by this Contract. This certificate of insurance shall be on file with the County throughout the term of the Contract. As a condition subsequent to this Contract, Contractor shall ensure that the certificate of insurance provided to the County will at all times be current. The parties agree that failure by the Contractor to maintain a current certificate of insurance with the County shall be a substantial breach of the Contract and payments on the Contract shall be withheld by the County until a certificate of insurance showing current insurance coverage in amounts required by the Contract is provided to the County.
Any policy obtained and maintained under this clause shall provide that it shall not be cancelled, materially changed, or not renewed without thirty days' notice thereof to the County.
Any policy obtained and maintained under this clause shall provide that it shall not be cancelled, materially changed, or not renewed without thirty days notice thereof to the County.

X. AUDITS, REPORTS, RECORDS AND MONITORING PROCEDURES/RECORDS AVAILABILITY & RETENTION.

Pursuant to Minn. Stat. section 16C.05 subd. 5, the Contractor/Consultant will:

A. Maintain records which reflect all revenues, costs incurred and services provided in the performance of this Agreement.
B. Agree that the County, the State Auditor, or legislative authority, or any of their duly authorized representatives at any time during normal business hours, and as often as they may deem reasonably necessary, shall have access to and the right to examine, audit, excerpt, and transcribe any books, documents, papers, records, etc., and accounting procedures and practices and involve transactions relating to this agreement. The Contractor agrees to maintain and make available these records for a period of six (6) years from the date of the termination of this agreement.

XI. DATA PRACTICES.

All data collected, created, received, maintained, or disseminated for any purpose by the activities of the contractor, because of this agreement shall be governed by the Minnesota Government Data Practices Act, Minnesota Statutes Chapter 13 (Act), as amended and the Rules implementing the Act now in force or as amended. The contractor is subject to the requirements of the Act and

Rules and must comply with those requirements as if it is a governmental entity. The remedies contained in section 13.08 of the Act shall apply to the contractor.

XII. NONDISCRIMINATION

The Contractor agrees to comply with the nondiscrimination provision set forth in Minnesota Statute 181.59. The Contractors failure to comply with section 181.59 may result in cancellation or termination of the agreement, and all money due or to become due under the contract may be forfeited for a second or any subsequent violation of the terms or conditions of this contract.

XIII. SUBCONTRACTOR PROMPT PAYMENT.

Pursuant to Minnesota Statute §471.425 subd. 4a., contractor shall pay any subcontractors within 10 days of the contractor's receipt of payment from the county for undisputed services provided by the subcontractor. The contractor shall pay interest of 1½ percent per month, or any part of a month, to the subcontractor on any disputed amount not paid on time to the subcontractor. The minimum monthly interest penalty payment for an unpaid balance of $100 or more is $10. For an unpaid balance of less than $100, the prime contractor shall pay the actual penalty due to the subcontractor. The subcontractor shall have third party rights under this agreement to enforce this provision.

XIV. JURISDICTION & VENUE.

This contract, amendments and supplements thereto, shall be governed by the laws of the State of Minnesota. All actions brought under this agreement shall be brought exclusively in Minnesota State Courts of competent jurisdiction with venue in Washington County.

XV. TERMINATION

The County may cancel this agreement at any time upon giving fifteen (15) days written notice sent to the Consultant at the address above.

XVI. MERGER

It is understood and agreed that the entire agreement of the parties is contained here and that this contract supersedes all oral agreements and negotiations between the parties relating to this subject matter. All items referred to in this contract are incorporated or attached and deemed to be part of the contract.

XVII. CONTRACTOR DEBARMENT, SUSPENSION AND RESPONSIBILITY CERTIFICATION

Federal Regulation 45 CFR 92.35 prohibits the County from purchasing goods or services with federal money from vendors who have been suspended or debarred by the federal government. Similarly, Minnesota Statutes, Section 16C.03, subdivision 2, provides the Commissioner of Administration with the authority to debar and suspend vendors who seek to Contract with the County. Contractors may be suspended or debarred when it is determined through a duly authorized hearing process, that they have abused the public trust in a serious manner. By signing this Contract, the Contractor certifies that it and its principals* and employees:

A. Are not presently debarred, suspended, proposed for debarment, declared ineligible, or voluntarily excluded from transacting business by or with any federal, state, or local governmental department or agency; and

B. Have not within a three year-period preceding this Contract: 1) been convicted of or had a civil judgment rendered against them for commission of fraud or a criminal offense in connection with obtaining, attempting to obtain or performing a public (federal, state, or local government) transaction or Contract, 2) violated any federal or state antitrust statutes, or 3) committed embezzlement, theft, forgery, bribery, falsification or destruction of records, making false statements or receiving stolen property; and are not presently indicted or otherwise criminally or civilly charged by a governmental entity for:
    a. commission of fraud or a criminal offense in connection with obtaining, attempting to obtain or performing a public (federal, state, or local government) transaction,
    b. violating any federal or state antitrust statutes, or
    c. committing embezzlement, theft, forgery, bribery, falsification or destruction of records, making false statements or receiving stolen property; and
C. Are not aware of any information and possess no knowledge that any subcontractor(s), that will perform work pursuant to this Contract, are in violation of any of the certifications set forth above; and
D. Shall immediately give written notice to the Contract manager should the Contractor come under investigation for allegations of fraud or a criminal offense in connection with obtaining or performing a public (federal, state, or local government) transaction, violating any federal or state antitrust statute, or committing embezzlement, theft, forgery, bribery, falsification of records, making false statements, or receiving stolen property.

*Principals, for the purpose of this certification, means officers, directors, owners, partners, and persons having primary management or supervisory responsibilities within a business entity (e.g., general manager, plant manager, head of subsidiary division or business segment, and similar positions).

XVIII. CONFLICT OF INTEREST

Contractor affirms that, to the best of its knowledge, this Contract does not present a conflict of interest with any party or entity, which may be affected by the terms of this Contract. The Contractor agrees that, should any conflict or potential conflict of interest become known, it will immediately notify the County of the conflict or potential conflict, and will advise the County whether it will or will not resign from the other engagement or representation. Unless waived by the County, a conflict or potential conflict may, in the County's discretion, be cause for cancellation or termination of this Contract.

XIX. MODIFICATION

Any material alteration, modification, or variation shall be reduced to writing as an amendment and signed by the parties. Any alterations, modifications, or variations deemed not to be material by agreement of the County and the Consultant shall not require written approval.

IN WITNESS WHEREOF, the County and Contractor have executed this agreement as of the date written below.

**City of Cottage Grove**

By _____
Signature

_____
Name & Title (please print)

Date _____

**Washington County**

By _____
Signature

David Brummel, Director
Name & Title

Date _____

Approved as to Form:

Assistant Washington County Attorney

Washington County
PUBLIC HEALTH & ENVIRONMENT

| Washington County Public Health & Environment<br>Worksite Action Plan | |
|---|---|
| **Contact Information** | |
| **Organization:** City of Cottage Grove | |
| **Primary Contact Name:** Tamara Anderson | **Business Agent:** Jaime Mann |
| **Address:** 12800 Ravine Parkway Cottage Grove Mn 55016 | **Address:** |
| **E-mail:** tanderson@cottagegrovemn.gov | **E-mail:** jmann@cottagegrovemn.gov |
| **Phone:** 651-458-2878 | **Phone:** 651-458-2833 |
| **Date:** 2/11/2026 | |
| **Potential number of employees impacted by this project?** 180 | |

| Project Description |
|---|
| **Project Description** |
| Building on the success of our 2025 "Healthy Eating" initiative, the City of Cottage Grove Wellness Committee proposes the 2026 Active Workstation Initiative. This project was designed in direct response to a recent internal staff survey regarding workplace wellness. This project aims to transform sedentary office environments into active workstations. By providing the specific equipment requested by our staff, we will reduce chronic disease risk factors associated with prolonged sitting and empower employees to meet physical activity goals during the workday. To maximize the reach of the grant funding, we have specifically selected equipment that is compact, lightweight, and highly portable. Rather than being tethered to a single desk, these walking pads, peddlers, and balance boards can be easily moved between workstations or shared within departments. This "mobile library" approach ensures that the equipment is not limited to a few individuals but is instead a shared municipal resource available to all staff. By making the equipment portable, we ensure that even those in smaller workspaces or shared offices have the opportunity to participate in the "Active Workplace" initiative. Liability waivers will be signed and acknowledged by risk management prior to implementation and usage of equipment. |
| **How will you sustain the project beyond this funding?** |

Washington County
PUBLIC HEALTH & ENVIRONMENT

The City of Cottage Grove Wellness Committee will take full ownership of this project to ensure its long-term viability. Our sustainability plan includes: Active Oversight: The Committee will manage the "equipment library," ensuring items are rotated between departments based on the demand identified in our staff survey. Maintenance & Care: As part of our recurring wellness programming, the Committee will conduct annual "equipment check-ups" to ensure all walking pads, peddlers, and boards are clean and in safe working order. Integration: We will incorporate training on how to use these active workstations into our new employee orientation. This ensures that, as the City grows, the culture of movement is introduced to every new hire from the very first day. Ongoing Promotion: The Committee will use our internal newsletters and staff meetings to share "Success Stories" and tips for staying active at your desk, keeping engagement high long after the initial purchase.

| **Action Plan** | | | |
|---|---|---|---|
| **Specific Activity**<br>*Activities that will lead to expected outcomes.* | **Expected Outcome(s)**<br>*What are the expected results or outcomes for the specific activities listed on the left?*<br>*Be specific, measurable, achievable, relevant, time bound, inclusive, and equitable.* | **Evaluation Plan**<br>*Simple metrics or feedback that will help you to determine if the activity is successful at meeting expected outcomes.* | **Budget for each item** |
| Increase physical activity opportunities for staff at their workstations. Liability waivers will be signed prior to usage of equipment.<br><br>Under-desk Walking Pads (approx. 15 units): $2,250<br><br>Under-desk Peddlers/Cycles (approx. 15 units): $750 | By October 31st, 2026 the City of Cottage Grove will increase physical activity in the workplace by offering a check out system for walking pads/under desk peddlers this will create equitable physical activity opportunities for staff at all fitness levels. | A 2025 Wellness Survey yielded a high response for wanting to improve physical activity in the workplace.<br>There will be a sign out sheet in order to reserve/check out the equipment. We will monitor usage of the equipment via the tracking sheet and follow up with an employee survey 6 months after implementation of the equipment. | $3,000 |
| | | **Total amount requested** | $3,000 |

Washington County
PUBLIC HEALTH & ENVIRONMENT

| In-Kind Contributions | |
|---|---|
| **In-kind Description (i.e. partner staff time, supplies, equipment, etc.)** | **Amount (10% required)** |
| Additional equipment and staff time will be implemented to support this project. | $2,000 |

**Questions can be sent to your Washington County Public Health and Environment contact.**

Washington County
PUBLIC HEALTH & ENVIRONMENT

| Washington County Public Health & Environment<br>Worksite Action Plan | |
|---|---|
| **Contact Information** | |
| **Organization:** City of Cottage Grove | |
| **Primary Contact Name:** Tamara Anderson | **Business Agent:** Jaime Mann |
| **Address:** 12800 Ravine Parkway Cottage Grove Mn 55016 | **Address:** |
| **E-mail:** tanderson@cottagegrovemn.gov | **E-mail:** jmann@cottagegrovemn.gov |
| **Phone:** 651-458-2878 | **Phone:** 651-458-2833 |
| **Date:** 2/11/2026 | |
| **Potential number of employees impacted by this project?** 180 | |

| Project Description |
|---|
| **Project Description** |
| Building on the success of our 2025 "Healthy Eating" initiative, the City of Cottage Grove Wellness Committee proposes the 2026 Active Workstation Initiative. This project was designed in direct response to a recent internal staff survey regarding workplace wellness. This project aims to transform sedentary office environments into active workstations. By providing the specific equipment requested by our staff, we will reduce chronic disease risk factors associated with prolonged sitting and empower employees to meet physical activity goals during the workday. To maximize the reach of the grant funding, we have specifically selected equipment that is compact, lightweight, and highly portable. Rather than being tethered to a single desk, these walking pads, peddlers, and balance boards can be easily moved between workstations or shared within departments. This "mobile library" approach ensures that the equipment is not limited to a few individuals but is instead a shared municipal resource available to all staff. By making the equipment portable, we ensure that even those in smaller workspaces or shared offices have the opportunity to participate in the "Active Workplace" initiative. Liability waivers will be signed and acknowledged by risk management prior to implementation and usage of equipment. |
| **How will you sustain the project beyond this funding?** |

Washington County
PUBLIC HEALTH & ENVIRONMENT

The City of Cottage Grove Wellness Committee will take full ownership of this project to ensure its long-term viability. Our sustainability plan includes: Active Oversight: The Committee will manage the "equipment library," ensuring items are rotated between departments based on the demand identified in our staff survey. Maintenance & Care: As part of our recurring wellness programming, the Committee will conduct annual "equipment check-ups" to ensure all walking pads, peddlers, and boards are clean and in safe working order. Integration: We will incorporate training on how to use these active workstations into our new employee orientation. This ensures that, as the City grows, the culture of movement is introduced to every new hire from the very first day. Ongoing Promotion: The Committee will use our internal newsletters and staff meetings to share "Success Stories" and tips for staying active at your desk, keeping engagement high long after the initial purchase.

| **Action Plan** | | | |
|---|---|---|---|
| **Specific Activity**<br>*Activities that will lead to expected outcomes.* | **Expected Outcome(s)**<br>*What are the expected results or outcomes for the specific activities listed on the left?*<br>*Be specific, measurable, achievable, relevant, time bound, inclusive, and equitable.* | **Evaluation Plan**<br>*Simple metrics or feedback that will help you to determine if the activity is successful at meeting expected outcomes.* | **Budget for each item** |
| Increase physical activity opportunities for staff at their workstations. Liability waivers will be signed prior to usage of equipment.<br><br>Under-desk Walking Pads (approx. 15 units): $2,250<br><br>Under-desk Peddlers/Cycles (approx. 15 units): $750 | By October 31st, 2026 the City of Cottage Grove will increase physical activity in the workplace by offering a check out system for walking pads/under desk peddlers this will create equitable physical activity opportunities for staff at all fitness levels. | A 2025 Wellness Survey yielded a high response for wanting to improve physical activity in the workplace.<br>There will be a sign out sheet in order to reserve/check out the equipment. We will monitor usage of the equipment via the tracking sheet and follow up with an employee survey 6 months after implementation of the equipment. | $3,000 |
| | | **Total amount requested** | $3,000 |

Washington County
PUBLIC HEALTH & ENVIRONMENT

| In-Kind Contributions | |
|---|---|
| **In-kind Description (i.e. partner staff time, supplies, equipment, etc.)** | **Amount (10% required)** |
| Additional equipment and staff time will be implemented to support this project. | $300 |

**Questions can be sent to your Washington County Public Health and Environment contact.**

# City Council Action Request

# 7.K.

| | |
|---|---|
| **Meeting Date** | 3/4/2026 |
| **Department** | Community Development |
| **Agenda Category** | Action Item |
| **Title** | Rental License Approvals |
| **Staff Recommendation** | Approve the issuance of rental licenses to the properties listed in the attached table. |
| **Budget Implication** | N/A |

**Attachments**

| | |
|---|---|
| 1. | Rental License Approvals CC Memo |
| 2. | Rental License Approvals Table |

**TO:** Honorable Mayor and City Council
Jennifer Levitt, City Administrator

**FROM:** Samantha Drewry, Code Enforcement Officer

**DATE:** February 25, 2026

**RE:** Rental License Approvals

---

## Background/Discussion

Rental licenses are required for nonowner-occupied residential properties (City Code Title 9-13, Property Maintenance, and Title 9-14, Rental Licensing) and are issued on a biennial basis. The licensing process includes submittal of the rental license application, payment of the rental license fee, and public criminal history report. Rental inspections are conducted on all rental properties as part of the licensing process. Once all information has been submitted and the inspection satisfactorily completed, the Council must approve the license prior to it being issued.

The properties listed in the attached table have completed the licensing process and are ready to have their licenses issued following Council approval.

## Recommendation

Approve the issuance of rental licenses to the properties listed in the attached table.

**2026 RENTAL LICENSES**

**CITY COUNCIL APPROVAL - MARCH 4, 2026**

| RENTAL LICENSE NUMBER | PROPERTY STREET # | PROPERTY STREET NAME | PROPERTY OWNER |
|---|---|---|---|
| RENT-001922 | 6859 | Meadow Grass Lane South | Jodie Dibble |
| RENT-001938 | 6706 | Meadow Grass Lane South | Su, Amy |
| RENT-001941 | 7676 | Irish Avenue Court South | Klein, Tom |
| RENT-001950 | 6764 | Pine Crest Trail South | Schopf, Cheryl |
| RENT-001955 | 8854 | 92nd Street South | Schopf, Cheryl |
| RENT-001969 | 8525 | Ivywood Avenue South | Bridge Homes |
| RENT-001970 | 8046 | Jody Avenue South | Bridge Homes |
| RENT-001999 | 6478 | Inspire Circle South | Upward America Southeast Property Owner LP |
| RENT-002023 | 7858 | 76th Street South | Tom Dippel |
| RENT-002052 | 8896 | 92nd Street South | JX LLC |
| RENT-002053 | 8872 | 92nd Street South | Xu Dai |
| RENT-002067 | 6798 | Meadow Grass Lane South | Xu Dai |
| RENT-002128 | 6682 | Hyde Avenue South | Laurie's Woods LLC |
| RENT-002129 | 7909 | 71st Street South | Schenk, Adam |
| RENT-002236 | 6533 | Genevieve Trail South | McDonald, Matthew & Cris |
| RENT-002241 | 6859 | Pine Crest Trail South | Pederson Holdings LLC |
| RENT-002243 | 8598 | Janero Avenue South | Pat Walsh |
| RENT-002274 | 6871 | Pine Crest Trail South | Domeier, Brian |
| RENT-002339 | 9461 | Indian Boulevard South | Gregerson, Michael |
| RENT-002342 | 7791 | Hemingway Avenue South | Singh Properties |
| RENT-002343 | 7630 | 79th Street South | Waturuocha, Chikezie & Lilian |
| RENT-002365 | 9448 | 69th Street South | Ganesha, Vasundhasa & Ravindranath, Mithun |
| RENT-002404 | 6548 | Joliet Avenue South | Bingi, Nishanth |
| RENT-002406 | 7348 | Timber Crest Drive South | Vasavi Holdings LLC |
| RENT-002427 | 7929 | Jocelyn Avenue South | Alverson, Doug |
| RENT-002936 | 6915 | Innsdale Avenue South | AUX Funding LLC |
| RENT-002937 | 9209 | Jeffery Avenue South | Hennepin RP Funding LLC |
| RENT-002938 | 6464 | Genevieve Trail South | Purush Panchapakesan |
| RENT-002944 | 7620 | East Point Douglas Road South | Ben and Amanda Greene |
| RENT-002948 | 7624 | East Point Douglas Road South | Ben and Amanda Greene |
| RENT-003047 | 6688 | 91st Street South | Obed Jean-Baptiste |

# City Council Action Request

# 7.L.

| | |
|---|---|
| **Meeting Date** | 3/4/2026 |
| **Department** | Public Safety |
| **Agenda Category** | Action Item |
| **Title** | Sale of Surplus Equipment - eBikes Purchase |
| **Staff Recommendation** | 1) Authorize the department to sell two ATVs (Units #5398 and 5399) to 61 Marine & Sports for $5,000.00. 2) Authorize the department to purchase two E-bikes with the proceeds from the sale of surplus equipment. The cost not to exceed $5,000. |
| **Budget Implication** | N/A |

**Attachments**

| | |
|---|---|
| 1. | Council Memo-ATV sale |
| 2. | Lakes Area Power Sports |
| 3. | 61 Marine |

**To:** Honorable Mayor and City Council
Jennifer Levitt, City Administrator

**From:** Peter J Koerner, Director of Public Safety

**Date:** March 4, 2026

**Subject:** **Sale of surplus equipment**

---

## INTRODUCTION

In 2005, the Cottage Grove Police Department (CGPD) purchased two Polaris Sportsman 700 ATVs with grant funds paying $13,327. These aging ATVs are no longer needed or cost-effective to operate.

CGPD intends to use the proceeds from the ATV sales to purchase two E-bikes, allowing us to effectively patrol our trails, parks, and events in a cost-effective manner.

While the ATVs were purchased with grant funds, the City is not required to report or reimburse funds to Washington County, Minnesota Homeland Security and Emergency Management, or FEMA unless the sale exceeds $5,000.

Council approval is required to sell the surplus equipment when the original purchase price exceeds $5,000.

CGPD obtained two quotes. 61 Marine & Sports offered $5,000. Lakes Area Power Sports offered $4,000.

## RECOMMENDATIONS

1. Authorize CGPD to sell two ATVs (Units #5398 and 5399) to 61 Marine & Sports for $5,000.

2. Authorize CGPD to purchase two E-bikes with the proceeds from the aforementioned sale of surplus equipment. The cost will not exceed $5,000.

Respectfully,

Peter J. Koerner
Director of Public Safety

# Lakes Area Powersports

8322 STATE 371 NW
WALKER MN 56484
218-547-1558

## Quote

Cottage Grove PD

Cottage Grove, MN 55016

Date 02/23/2026
Deal No.
Salesperson Lori Kuhlman
Lienholder See notes below

H W C 651-458-2850 Email ntorning@cottagegrovemn.gov

I hereby agree to purchase the following unit(s) from you under the terms and conditions specified. Delivery is to be made as soon as possible. It is agreed, however, that neither you nor the manufacturer will be liable for failure to make delivery.

### Unit Information

| N/U | Year | Make | Model | Decription | Serial No. | Stock No. | Price (Incl factory options) |
|---|---|---|---|---|---|---|---|
| New | 2026 | | Temporary MU | | | TEMP | $0.00 |

Quoted Parts:

| | Retail | Discount | Ext Price |
|---|---|---|---|

| | |
|---|---|
| Dealer Unit Price | $0.00 |
| Parts/Labor | $0.00 |
| Freight | $0.00 |
| Dealer Prep | $0.00 |

Quoted Labor:

Notes:

| | |
|---|---|
| **Cash Price** | $0.00 |
| Trade Allowance | $4,000.00 |
| Payoff | $0.00 |
| Net Trade | $4,000.00 |
| **Net Sale** (Cash Price - Net Trade) | ($4,000.00) |
| Sales Tax | $0.00 |
| Title/License/Registration Fees | $0.00 |
| Document or Administration Fees | $0.00 |
| Credit Life Insurance | $0.00 |
| Accident & Disability | $0.00 |
| **Sub Total** | ($4,000.00) |
| Cash Down Payment | $0.00 |
| **Amount to Pay/Finance** | ($4,000.00) |

Trade Information

| | | |
|---|---|---|
| 2005 | Polaris | A05MH68AK |
| 2005 | Polaris | A05MH68AK |

**Monthly Payment of $0.00 For 0 Months at 0.00% Interest**

NOTICE TO BUYER: (1) Do not sign this agreement before you read it or if it contains any blank spaces to be filled in. (2) You are entitled to a completely filled in copy of this agreement. (3) If you default in the performance of your obligations under this agreement, the vehicle may be repossessed and you may be subject to suit and liability for the unpaid indebtedness evidenced by this agreement.

TRADE-IN NOTICE: Customer represents that all trade in units described above are free of all liens and encumbrances except as noted.

*With Approved Credit. Interest rates and monthly payment are approximate and may vary from those determined by the lender.

Customer(s) Signature _____ Dealer Signature _____

Thank You for Your Business!

11730 PT. DOUGLAS DR. SOUTH
HASTINGS, MN 55033
PHONE. (651) 437-3522
FAX (651) 437-2095
INFO@61MARINE.COM

SALES. SERVICE. PARTS. ACCESSORIES

# BILL OF SALE

I Cottage Grove Police Department HEREBY RELINGUISH OWNERSHIP OF THE FOLLOWING UNIT TO 61 MARINE & SPORTS INC AND NO LONGER HAVE SECURITY INTEREST IN THE UNIT. The seller warrants that the seller is the legal owner of the unit; the unit is free from all liens and encumbrances; the seller has full right and authority to sell and transfer the unit; and the seller will warrant and defend the title of the unit against any and all claims and demands of all persons.

YEAR: 2005

MAKE: Polaris

MODEL: 700 EFI (2 Units)

VIN / SERIAL NUMBER: 4XAMH68A651623125, 4XAMH68AX5A635813

PURCHASE PRICE: $5000

SELLER SIGNATURE: _____ DATE: 02/11/2026

SELLER SIGNATURE: _____ DATE: _____

BUYER SIGNATURE: [signature] DATE: 02/11/2026

# City Council Action Request

# 7.M.

| | |
|---|---|
| **Meeting Date** | 3/4/2026 |
| **Department** | Public Safety |
| **Agenda Category** | Action Item |
| **Title** | Authorization to Purchase Replacement Squad |
| **Staff Recommendation** | Approve the purchase of a replacement vehicle for the administrative fleet. |
| **Budget Implication** | up to $52,478 ($32,289.18 from the insurance claim and up to $20,189.00 form the insurance fund) |

**Attachments**

| | |
|---|---|
| 1. | Council Memo-Replacement Squad Purchase |

**To:** Honorable Mayor and City Council
Jennifer Levitt, City Administrator

**From:** Peter J Koerner, Director of Public Safety

**Date:** March 4, 2026

**Subject:** **Authorization to purchase replacement squad**

---

## INTRODUCTION

In February, admin squad #2436, a 2023 Chevrolet Traverse LT assigned to the Investigative Division, was involved in a crash resulting in a total loss. The insurance claim will net $32,289.18 after towing and miscellaneous expenses are paid.

Several replacement options were explored and three quotes were obtained. A comparable 2026 Chevrolet Traverse LT would cost approximately $52,478 including taxes, fees, and equipment installation.

| | Vehicle | Price | Estimated tax & fees | Equipment & installation | Total | Settlement | Delta |
|---|---|---|---|---|---|---|---|
| 1. Preferred option | 2026 Chevrolet 1500 | 42,404 | 3,272 | 2,730 | 48,406 | 2023 Chevrolet Traverse LT | 16,117 |
| 2. Comparable replacement | 2026 Chevrolet Traverse LT | 46,026 | 3,722 | 2,730 | 52,478 | 32,289.18 | 20,189 |

The preferred replacement option is a new pickup truck, which will cost less than a comparable Chevrolet Traverse LT and can be repurposed to the CSO Division later in its lifecycle.

## RECOMMENDATION

Grant permission for CGPD to purchase and equip a replacement admin squad at a cost which will not exceed $52,478. $32,289.18 of this purchase price will be funded by the insurance claim. The remaining funds will be funded by the insurance fund.

# City Council Action Request

# 7.N.

| | |
|---|---|
| **Meeting Date** | 3/4/2026 |
| **Department** | Parks and Recreation |
| **Agenda Category** | Action Item |
| **Title** | Bike Park Service Agreement |
| **Staff Recommendation** | Authorize service agreement with Pathfinder Trail Building, LLC for Bike Park jump line improvements for the amount of $73,608. |
| **Budget Implication** | $73,608 from Park Improvement Fund. |

**Attachments**

| | |
|---|---|
| 1. | Memo-Bike Park Service Agreement |
| 2. | Agreement for Contractor Services -Bike Park |

**To:** Honorable Mayor and City Council
Jennifer Levitt, City Administrator

**From:** Zac Dockter, Parks and Recreation Director

**Date:** February 17, 2026

**Subject:** Bike Park Jump Line Improvements Service Agreement

---

**Introduction**
As the popularity of the Bike Park continues to increase, maintenance of the jump line's dirt approaches, launching points and landing areas continue to be the most challenging maintenance upkeep for the volunteers. In addition, the jump lines have the longest lag time for reopening after rainfall as riding on soft soils can be detrimental to the tracks and jumps. As such, Bike Park volunteers are proposing to hire the installation of prefabricated wood jump lips with advanced armor carpeting material (before, at and after the jumps) both of which will reduce erosion and allow for faster reopenings after rain events. These improvements are estimated to save over 100 hours in volunteer labor per season while also increasing performance and availability of the jump lines which are a key feature of the Bike Park.

**Background**
The Bike Park volunteer group has been maintaining the jump line with repurposed household carpeting materials for runways while packing the jump lips by hand with clay/dirt and shovel. A few years ago, the volunteer group proposed the aforementioned improvements to the park. $75,000 was scheduled into the Capital Improvement Plan for 2026 with sources being derived from the Park Improvement Fund.

Proposals were accepted from two vendors considered industry experts in this specialized line of work. The results of the proposals are as follows:

| | |
|---|---|
| Pathfinder Trail Building (Afton, MN) | $73,608 |
| Flow Ride Concepts (Wheat Ridge, CO) | $83,850 |

The 2025 quote price will be honored by Pathfinder Trail Building.

**Staff Recommendation**
Authorize service agreement with Pathfinder Trail Building, LLC for Bike Park jump line improvements for the amount of $73,608.

# AGREEMENT FOR SERVICES
## Bike Park Jump Line Renovation Project

THIS AGREEMENT ("Agreement") is made and executed this 4th day of February, 2026, by and between the City of Cottage Grove, 12800 Ravine Parkway South, Cottage Grove, Minnesota 55016, ("City") and Pathfinder Trail Building, 219 Indian Trail S, Afton, MN 55001 ("Contractor").

WHEREAS, the City has accepted the proposal of the Contractor for certain services; and

WHEREAS, Contractor desires to perform the services for the City under the terms and conditions set forth in this Agreement.

NOW, THEREFORE, in consideration of the mutual consideration contained herein, it is hereby agreed as follows:

1. SERVICES.

    a. City agrees to engage Contractor as an independent contractor for the purpose of performing certain Services ("Services"), as defined in the following documents:

        i. A proposal dated June 3rd 2025, incorporated herein as Exhibit A.

        ii. Where the terms and conditions of this Agreement and those terms and conditions included in the Exhibits specifically conflict, the terms of this Agreement shall apply.

    b. Contractor covenants and agrees to provide the Services to the satisfaction of the City in a timely fashion, as set forth in the Exhibits, subject to Section 9 of this Agreement.

    c. Contractor agrees to comply with all federal, state, and local laws and ordinances applicable to the Services to be performed under this Agreement, including all safety standards. Contractor shall be solely and completely responsible for conditions of the job site, including the safety of all persons and property during the performance of the Services. Contractor represents and warrants that it has the requisite training, skills, and experience necessary to provide the Services and is appropriately licensed and has obtained all permits from all applicable agencies and governmental entities.

2. PAYMENT.

a. City agrees to pay Contractor $73,608.00 for project completion, and Contractor agrees to receive and accept payment for Services as set forth in the Exhibits. Payment shall be due as follows:
    i. 40% of the project cost will be due upon delivery and receipt of all materials needed to complete the services.
    ii. The remaining 60% of the total amount shall be due upon contractor's completion of installation and all services outlined in Exhibit A.

b. Any changes in the scope of the work of the Services that may result in an increase to the compensation due the Contractor shall require prior written approval by the authorized representative of the City or by the City Council. The City will not pay additional compensation for Services that do not have prior written authorization.

c. Contractor shall submit itemized bills for Services provided to City on a monthly basis. Bills submitted shall be paid in the same manner as other claims made to City.

d. Prior to payment, the Contractor will submit evidence that all payrolls, material bills, subcontractors and other indebtedness connected with the Services have been paid as required by the City.

3. TERM. The term of this Agreement is identified in the Exhibits. This Agreement may be extended upon the written mutual consent of the parties for such additional periods as they deem appropriate, and upon the same terms and conditions as herein stated.

4. BONDS. If the Services provided by the Contractor as set forth in the Exhibits and this Agreement exceeds $175,000, Contractor shall furnish performance and payment bonds covering faithful performance of all the Contractor's obligations, including, without limitation, warranty obligations and of all payment of obligations arising under this Agreement. The bonds shall each be issued in an amount equal to 100% of the stipulated sum identified in Section 2 of this Agreement.

5. TERMINATION AND REMEDIES.

a. Termination by Either Party. This Agreement may be terminated by either party upon thirty (30) days' written notice delivered to the other party at the addresses listed in Section 15 of this Agreement. Upon termination under this provision, if there is no default by the Contractor, Contractor shall be paid for Services rendered and reimbursable expenses incurred through the effective date of termination.

b. Termination Due to Default. This Agreement may be terminated by either party upon written notice in the event of substantial failure by the other party to perform in accordance with the terms of this Agreement. The non-performing party shall have

fifteen (15) calendar days from the date of the termination notice to cure or to submit a plan for cure that is acceptable to the other party.

c. Remedies. Notwithstanding the above, the Contractor shall not be relieved of liability to the City for damages sustained by the City as a result of any breach of this Agreement by the Contractor. The City may, in such event:

i. Withhold payments due to the Contractor for the purpose of set-off until such time as the exact amount of damages due to the City is determined.

ii. Perform the Services, in which case, the Contractor shall within thirty (30) days after written billing by the City, reimburse the City for any costs and expenses incurred by the City.

The rights or remedies provided for herein shall not limit the City, in case of any default by the Contractor, from asserting any other right or remedy allowed by law, equity, or by statute.

d. Upon termination of this Agreement, the Contractor shall furnish to the City copies or duplicate originals of all documents or memoranda prepared for the City not previously furnished.

6. SUBCONTRACTORS. Contractor shall not enter into subcontracts for any of the Services provided for in this Agreement without the express written consent of the City, unless specifically provided for in the Exhibits. Contractor shall pay any subcontractor involved in the performance of this Agreement within the ten (10) days of the Contractor's receipt of payment by the City for undisputed services provided by the subcontractor.

7. STANDARD OF CARE. In performing its Services, Contractor will use that degree of care and skill ordinarily exercised, under similar circumstances, by reputable members of its profession in the same locality at the time the Services are provided.

8. INSPECTION OF WORK. All materials and workmanship will be subject to inspection, examination, and testing by the City, who will have the right to reject defective material and workmanship or require its correction.

9. DELAY IN PERFORMANCE. Neither City nor Contractor shall be considered in default of this Agreement for delays in performance caused by circumstances beyond the reasonable control of the nonperforming party. For purposes of this Agreement, such circumstances include, but are not limited to, abnormal weather conditions; floods; earthquakes; fire; epidemics; war, riots, and other civil disturbances; strikes, lockouts, work slowdowns, and other labor disturbances; sabotage; judicial restraint; and inability to procure permits, licenses or authorizations from any local, state, or federal agency for any of the supplies, materials, accesses, or services required to be provided by either City or Contractor under

this Agreement. If such circumstances occur, the nonperforming party shall, within a reasonable time of being prevented from performing, give written notice to the other party describing the circumstances preventing continued performance and the efforts being made to resume performance of this Agreement. Contractor will be entitled to payment for its reasonable additional charges, if any, due to the delay.

10. CITY'S REPRESENTATIVE. The City has designated Zac Dockter to act as the City's representative with respect to the Services to be performed under this Agreement. He or she shall have complete authority to transmit instructions, receive information, interpret, and define the City's policy and decisions with respect to the Services covered by this Agreement.

11. PROJECT MANAGER AND STAFFING. The Contractor has designated Adam Buck to be the primary contacts for the City in the performance of the Services. They shall be assisted by other staff members as necessary to facilitate the completion of the Services in accordance with the terms established herein. Contractor may not remove or replace these designated staff without the approval of the City.

12. INDEMNIFICATION.

    a. Contractor and City each agree to defend, indemnify, and hold harmless each other, its agents and employees, from and against legal liability for all claims, losses, damages, and expenses to the extent such claims, losses, damages, or expenses are caused by its negligent acts, errors, or omissions. In the event claims, losses, damages, or expenses are caused by the joint or concurrent negligence of Contractor and City, they shall be borne by each party in proportion to its own negligence.

    b. Contractor shall indemnify City against legal liability for damages arising out of claims by Contractor's employees or subcontractors, including all liens. City shall indemnify Contractor against legal liability for damages arising out of claims by City's employees or subcontractors.

13. INSURANCE. During the performance of the Services under this Agreement, Contractor shall maintain the following insurance:

    a. Commercial General Liability Insurance, with a limit of $2,000,000 for any number of claims arising out of a single occurrence.

    b. Workers' Compensation Insurance in accordance with statutory requirements.

    c. Automobile Liability Insurance, with a combined single limit of $2,000,000.

    Contractor shall furnish the City with certificates of insurance, which shall include a provision that such insurance shall not be canceled without written notice to the City.

The City shall be named as an additional insured on the Commercial General Liability Insurance policy.

14. WARRANTIES. Contractor warrants and guarantees that title to all work, materials, and equipment covered by any invoice, will pass to City no later than the final completion date of all Services. Contractor warrants that all work will be free from defects and that all materials will be new and of first quality. If within one (1) year after final payment any work or material is found to be defective, Contractor shall promptly, without cost to the City, correct such defect.

15. NOTICES. Notices shall be communicated to the following addresses:

If to City: City of Cottage Grove
12800 Ravine Parkway South
Cottage Grove, MN 55016
Attention: City Administrator

Or emailed: zdockter@cottagegrovemn.gov

If to Contractor: Pathfinder Trail Building
219 Indian Trail South
Afton, MN 55001

Or emailed: buck@pathfindertrailbuilding.com

16. INDEPENDENT CONTRACTOR STATUS. All services provided by Contractor, its officers, agents and employees pursuant to this Agreement shall be provided as employees of Contractor or as independent contractors of Contractor and not as employees of the City for any purpose.

17. RESPONSIBLE CONTRACTOR.

a. In accordance with Minnesota Statutes, Section 16C.285, Contractor is hereby advised that the City cannot award a construction contract in excess of $50,000 unless Contractor is a "responsible contractor" as defined in Minnesota Statutes, Section 16C.285, subdivision 3. Contractor must complete a Responsible Contractor Certificate verifying compliance with the minimum criteria specified in Minnesota Statutes, Section 16C.285, subdivision 3, to be eligible to provide the Services outlined in this Agreement. A Responsible Contractor Certificate must be signed under oath by an owner or officer of Contractor. Contractor is responsible for obtaining the required verifications of compliance with Minnesota Statute, Section 16C.285, subdivision 3 from all subcontractors, using a form provided by the City. Contractor must submit signed verifications from subcontractors upon the City's request.

b. Contractor or subcontractor who does not meet the minimum criteria established in Minnesota Statutes, Section 16C.285, subdivision 3, or who fails to verify

compliance with the minimum requirements of this statute, will not be considered a "responsible contractor" and will be ineligible to provide the Services under this Agreement or otherwise work on the project in any capacity. Contractor and any subcontractor are advised that making any false statements verifying compliance with Minnesota Statutes, Section 16C.285 will render the Contractor or subcontractor ineligible to perform the Services of this Agreement and may result in termination of this Agreement by the City.

c. Contractor shall not sublet, sell, transfer, delegate or assign the Services or any portion of the Services of this Agreement without abiding by the applicable provisions of the Minnesota Department of Transportation Standard Specifications for Construction, Section 1801.

18. GENERAL PROVISIONS.

a. Assignment. This Agreement is not assignable without the mutual written agreement of the parties.

b. Waiver. A waiver by either City or Contractor of any breach of this Agreement shall be in writing. Such a waiver shall not affect the waiving party's rights with respect to any other or further breach.

c. Nondiscrimination. Contractor agrees that in the hiring of employees to perform Services under this Agreement, Contractor shall not discriminate against any person by reason of any characteristic protected by state or federal law.

d. Governing Law. This Agreement shall be construed in accordance with the laws of the State of Minnesota and any action must be venued in Washington County District Court.

e. Amendments. Any modification or amendment to this Agreement shall require a written agreement signed by both parties.

f. Severability. If any term of this Agreement is found be void or invalid, such invalidity shall not affect the remaining terms of this Agreement, which shall continue in full force and effect.

g. Data Practices Compliance. All data collected by the City pursuant to this Agreement shall be subject to the Minnesota Government Data Practices Act, Minnesota Statutes, Chapter 13.

h. Entire Agreement. This Agreement constitutes the entire agreement of the parties and supersedes all prior communications, understandings and agreements relating to the subject matter hereof, whether oral or written.

**CITY OF COTTAGE GROVE**

By: _____
Myron A. Bailey, Mayor

By: _____
Tamara Anderson, City Clerk

Date: _____

**CONTRACTOR**

Signature: _____

Name: Adam Buck

Its: Owner, Pathfinder Trail Building

Date: Feb. 3, 2026

# Exhibit A

## Estimate

**Pathfinder Trail Building LLC**
*Lead, Never Follow*

219 Indian Trail S
Afton MN 55001
507-226-3799
buck@pathfindertrailbuilding.com

ESTIMATE 00006
DATE: 6/3/2025

TO Cottage Grove Bike Park
Chance Glasford

| SALESPERSON | JOB | ESTIMATE | DUE DATE |
|---|---|---|---|
| Adam Buck | CGBP - Jump Lines | Valid for 30 days<br><br>Ramps require 50% down, and 50% plus shipping at completion. | |

| QTY | DESCRIPTION | UNIT PRICE | LINE TOTAL |
|---|---|---|---|
| 3 | 3' prefabricated jumps | $4,500.00 | $12,150.00 |
| 3 | 4' prefabricated jumps | $5,000.00 | $15,000.00 |
| 3 | 5' prefabricated jumps | $6,500.00 | $18,000.00 |
| 13,200' | Carpet | $1.29 per sq ft + shipping | $20,000.00 |
| | | | |
| 1 | Mobilization (delivery of ramps and equipment) | $1,350.00 (Lump Sum) | $1,350.00 |
| 3 | Construction - includes two machine operators, two hand laborers, 2 mini ex, and all associated hand tools and needed equipment. | $2,369.40 (day rate) | $7,108.20 |
| | | | |
| | | SUBTOTAL | ----- |
| | | SALES TAX | ----- |
| | | TOTAL | $73,608.00 |

# City Council Action Request

# 7.O.

| | |
|---|---|
| **Meeting Date** | 3/4/2026 |
| **Department** | Parks and Recreation |
| **Agenda Category** | Action Item |
| **Title** | Kingston ECP Grant Application |
| **Staff Recommendation** | Authorize staff to apply for a MN DNR Expedited Conservation Partners grant for Kingston Park native habitat restoration in the amount of $75,000. |
| **Budget Implication** | $75,000 ECP Grant with 10% match. |
| **Attachments** | 1. Memo-Kingston ECP Grant Application final |

Cottage Grove
Where Pride and Prosperity Meet

**To:** Honorable Mayor and City Council
Jennifer Levitt, City Administrator

**From:** Zac Dockter, Parks and Recreation Director

**Date:** February 24, 2026

**Subject:** Kingston Park Native Landscape Restoration Grant

---

## Introduction/Background

The City performed a habitat restoration project for Kingston Park open spaces in 2019 under a Minnesota Department of Natural Resources (MN DNR) Conservation Partners Grant. The grant was successfully completed, and the ecosystem is much improved. However, after five growing seasons the project team believes there is further work needed to boost the native prairie and woodland plant populations. The MN DNR offers an Expedited Conservation Partners Grant (ECP) program that is a good fit to bring this restoration project to completion. Staff is proposing to apply for the ECP grant as follows:

**Kingston Park Budget - DRAFT 2026 ECP Grant Budget**

| Restoration Activity/Task | Units | Quantity | Unit Cost | TOTAL | Match | CPL Grant request |
|---|---|---|---|---|---|---|
| **Woodland/Savanna (13.9 ac.)** | | | | | | |
| Native woodland edge enrichment seed/seeding[2] | AC | 13.9 | $645 | $8,966 | $0 | $8,966 |
| Grow-in spot herbicide (5 x 13.9 ac.) | AC | 55.6 | $170 | $9,452 | $0 | $9,452 |
| | | | ***SUBTOTAL*** | ***$18,418*** | ***$0*** | ***$18,418*** |
| | | | | | | |
| **Prairie Restoration (23.2 ac.)** | | | | | | |
| Site preparation prescribed burn (prairie) | EA | 1 | $10,278 | $10,278 | $0 | $10,278 |
| Diverse Prairie seed/seeding[2] | AC | 23.2 | $895 | $20,764 | $0 | $20,764 |
| **Dormant season and/or Growing Season Spot Mowing (CITY 3x)** | **AC** | **69.6** | **$70** | **$4,872** | **$4,872** | **$0** |
| Grow-in prescribed burn (prairie) | EA | 1 | $10,460 | $10,460 | $0 | $10,460 |
| Grow-in spot herbicide (5 x 23.2 ac.) | AC | 116 | $130 | $15,080 | $0 | $15,080 |
| | | | ***SUBTOTAL*** | ***$61,454*** | ***$4,872*** | ***$56,582*** |
| **Grant Administration (20 hours @$75/hr)** | **EA** | **1** | **$2,628** | **$2,628** | **$2,628** | **$0** |
| | | | **TOTAL** | **$82,500** | **$7,500** | **$75,000** |

**assumes City mows (@$60/ac.)*

[2]*Seeding by contractor includes labor & equipment and high diversity, local native seed mix*

*Prescribed burn activities include burn plan preparation approvals & permits, burn break preparation, & conducting burns*

## Staff Recommendation

Authorize staff to apply for a MN DNR Expedited Conservation Partners grant for Kingston Park native habitat restoration in the amount of $75,000.

# City Council Action Request

# 7.P.

| | |
|---|---|
| **Meeting Date** | 3/4/2026 |
| **Department** | Parks and Recreation |
| **Agenda Category** | Action Item |
| **Title** | Ice Arena Kraus-Anderson Agreement |
| **Staff Recommendation** | Authorize Construction Manager as Adviser AIA C132 contract with Kraus Anderson for preconstruction services in the amount of $10,000 and preconstruction administration and management fee equal to 2.25% (estimated at $91,842) of the project costs for the Ice Arena Remodel Project. |
| **Budget Implication** | Preconstruction Services ($10,000 flat fee & Preconstruction Administration and Management Fee - $91,842) - Ice Arena Capital Funds. |

**Attachments**

| | |
|---|---|
| 1. | Council Memo-Kraus Anderson Proposal |
| 2. | _Owner Contract - CG Ice Arena Lobby Renovation |

**To:** Honorable Mayor and City Council
Jennifer Levitt, City Administrator

**From:** Zac Dockter, Parks and Recreation Director

**Date:** February 25, 2026

**Subject:** Ice Arena Remodel Project – Contract for Construction Management Services

---

**Background**
On February 4, 2026, City Council authorized final design services with Oertel Architects for the Ice Arena Remodel Project. As the project team moves toward completion of design work, staff is proposing to secure construction management services for project delivery. This would be a similar approach to other building projects such as Glacial Valley Park, Woodridge Park, Hamlet Park, Oakwood Park, River Oaks Kitchen Expansion, Kingston Park and several Ice Arena construction projects.

**Discussion**
There are three models for delivering municipal building projects that are allowed by State Statute: Construction Manager as Adviser, Construction Management at Risk, and Design-Bid-Build. Staff is recommending the Construction Manager as Adviser option.

In the Construction Management as Adviser (CMA) model, the Owner has a contract with an entity that provides consultation through design phase, manages cost estimating of the project to stay on budget, and ultimately bids out all of the project divisions individually. The City will hold all contracts with each subcontractor. However, the Construction Manager acts as the City's dedicated representative to legally act on behalf of the City to prepare and manage contracts, make project-specific decisions, and authorize documents needed to procure materials, labor and services. All contracts, change orders and pay requests require written authorization from the City. The CMA model allows the City to infuse construction technical support to help control costs, manage the project budget, provide transparency through construction and keep a hands-on approach throughout the bidding, construction and turnover processes.

Staff is recommending Kraus Anderson be hired as Construction Manager for the Ice Arena Remodel Project project. Their team's project management experience and commitment to customer service has been proven with their long resume of similar municipal projects. Examples of local projects completed by Kraus Anderson include:

Cottage Grove Ice Arena Construction/Expansion
Cottage Grove Ice Arena Locker Room Expansion
Central Fire Station
River Oaks Kitchen Expansion
Oltman Middle School Construction
Washington County South Service Center Construction
Glacial Valley Park Building
Cottage Grove Utilities and Engineering Facility

Based upon these past working relationships and their ability to deliver excellent service, staff is highly confident with the Kraus Anderson team to manage this project with expertise and professionalism. Kraus Anderson is aware of the City's project management goals, policies, practices and expectations which will help to ensure a positive and efficient outcome.

**Fee**
Kraus Anderson has submitted a fee proposal based on the following:

Preconstruction Services - $10,000 flat fee (estimated $20,000 value for plan/cost review work)
Preconstruction Administration and Management Fee - $91,842 (2.25% of project costs)

Preconstruction fees typically include concept design estimating, design development estimating, design review, construction consultation, bid procurement, project scheduling and more. Once the project has been sufficiently defined after the Preconstruction Phase, the City and Construction Manager shall execute an Amendment setting forth the Construction Manager's compensation for the Construction Phase of the project.

The fees proposed are similar to past municipal building projects.

**Staff Recommendation**
Authorize Construction Manager as Adviser AIA C132 contract with Kraus Anderson for preconstruction services in the amount of $10,000 and preconstruction administration and management fee equal to 2.25% ($91,842) of the project costs for the Ice Arena Remodel Project.

# AIA® Document C132® – 2019

## *Standard Form of Agreement Between Owner and Construction Manager as Adviser*

**AGREEMENT** made as of the 18th day of February in the year 2026
*(In words, indicate day, month and year.)*

**BETWEEN** the Owner:
*(Name, legal status, address, and other information)*

City of Cottage Grove
12800 Ravine Parkway South
Cottage Grove, MN 55016

and the Construction Manager:
*(Name, legal status, address, and other information)*

Kraus-Anderson Construction Company
501 South 8th Street
Minneapolis, MN 55404

for the following Project:
*(Name, location, and detailed description)*

Cottage Grove Ice Arena – Lobby Renovation
8020 80th Street South
Cottage Grove, MN 55016

The Architect:
*(Name, legal status, address, and other information)*

Oertel Architects, LTD.
1795 Saint Clair Avenue
St. Paul, MN 55105

The Owner and Construction Manager agree as follows.

**ADDITIONS AND DELETIONS:**
The author of this document may have revised the text of the original AIA standard form. An *Additions and Deletions Report* that notes revisions to the standard form text is available from the author and should be reviewed. A vertical line in the left margin of this document indicates where the author has added to or deleted from the original AIA text.

This document has important legal consequences. Consultation with an attorney is encouraged with respect to its completion or modification.

This document is intended to be used in conjunction with AIA Documents A132™–2019, Standard Form of Agreement Between Owner and Contractor, Construction Manager as Adviser Edition; A232™–2019, General Conditions of the Contract for Construction, Construction Manager as Adviser Edition; and B132™–2019, Standard Form of Agreement Between Owner and Architect, Construction Manager as Adviser Edition.

AIA Document A232™–2019 is adopted in this document by reference. Do not use with other general conditions unless this document is modified.

AIA Document C132 – 2019. Copyright © 1973, 1980, 1992, 2009, and 2019. All rights reserved. "The American Institute of Architects," "American Institute of Architects," "AIA," the AIA Logo, and "AIA Contract Documents" are trademarks of The American Institute of Architects. This document was produced at 10:08:29 CST on 02/25/2026 under Subscription No.20240079516 which expires on 12/13/2026, is not for resale, is licensed for one-time use only, and may only be used in accordance with the AIA Contract Documents® Terms of Service. To report copyright violations, e-mail docinfo@aiacontracts.com.
**User Notes:** (699f1e5e7f2986a885297bea)

**TABLE OF ARTICLES**


**1 INITIAL INFORMATION**

**2 CONSTRUCTION MANAGER'S RESPONSIBILITIES**

**3 SCOPE OF CONSTRUCTION MANAGER'S BASIC SERVICES**

**4 SUPPLEMENTAL AND ADDITIONAL SERVICES**

**5 OWNER'S RESPONSIBILITIES**

**6 COST OF THE WORK**

**7 COPYRIGHTS AND LICENSES**

**8 CLAIMS AND DISPUTES**

**9 TERMINATION OR SUSPENSION**

**10 MISCELLANEOUS PROVISIONS**

**11 COMPENSATION**

**12 SPECIAL TERMS AND CONDITIONS**

**13 SCOPE OF THE AGREEMENT**


## ARTICLE 1 INITIAL INFORMATION

**§ 1.1** This Agreement is based on the Initial Information set forth in this Section 1.1.
*(For each item in this section, insert the information or a statement such as "not applicable" or "unknown at time of execution.")*

**§ 1.1.1** The Owner's program for the Project:
*(Insert the Owner's program, identify documentation that establishes the Owner's program, or state the manner in which the program will be developed.)*

Renovation of the main lobby, offices, concessions and associated spaces within the existing Cottage Grove Ice Arena

**§ 1.1.2** The Project's physical characteristics:
*(Identify or describe pertinent information about the Project's physical characteristics, such as size; location; dimensions; geotechnical reports; site boundaries; topographic surveys; traffic and utility studies; availability of public and private utilities and services; legal description of the site, etc.)*

See Section 1.1.1

**§ 1.1.3** The Owner's budget for the Cost of the Work, as defined in Section 6.1:
*(Provide total and, if known, a line item breakdown.)*

**§ 1.1.4** The Owner's anticipated design and construction milestone dates:

**.1** Design phase milestone dates, if any:

Final Construction Documents are anticipated Fall 2026

**.2** Construction commencement date:


AIA Document C132 – 2019. Copyright © 1973, 1980, 1992, 2009, and 2019. All rights reserved. "The American Institute of Architects," "American Institute of Architects," "AIA," the AIA Logo, and "AIA Contract Documents" are trademarks of The American Institute of Architects. This document was produced at 10:08:29 CST on 02/25/2026 under Subscription No.20240079516 which expires on 12/13/2026, is not for resale, is licensed for one-time use only, and may only be used in accordance with the AIA Contract Documents® Terms of Service. To report copyright violations, e-mail docinfo@aiacontracts.com.
**User Notes:** (699f1e5e7f2986a885297bea)

Anticipated to be March 2027, pending the receipt of all applicable permits

**.3** Substantial Completion date or dates:

**.4** Other milestone dates:

**§ 1.1.5** The Owner intends the following procurement method for the Project:
*(Identify method such as competitive bid or negotiated contract.)*

Multiple Prime Contracts

**§ 1.1.6** The Owner's requirements for accelerated or fast-track design and construction, multiple bid packages, or phased construction are set forth below:
*(Identify any requirements for fast-track scheduling or phased construction and, if applicable, list number and type of bid/procurement packages.)*

**§ 1.1.7** The Owner's anticipated Sustainable Objective for the Project:
*(Identify and describe the Owner's Sustainable Objective for the Project, if any.)*

**§ 1.1.7.1** If the Owner identifies a Sustainable Objective, the Owner and Construction Manager shall endeavor to define the terms, conditions and services related to the Owner's Sustainable Objective and may complete and incorporate AIA Document E235™–2019, Sustainable Projects Exhibit, Construction Manager as Adviser Edition, into this Agreement. If E235–2019 is incorporated into this Agreement, the Owner and Construction Manager shall incorporate the completed E235–2019 into the agreements with the consultants and contractors performing services or Work in any way associated with the Sustainable Objective.

**§ 1.1.8** Other Project information:
*(Identify special characteristics or needs of the Project not provided elsewhere.)*

**§ 1.1.9** The Owner identifies the following representative in accordance with Section 5.5:
*(List name, address, and other contact information.)*

Zac Dockter
City of Cottage Grove – Parks & Recreation Director
12800 Ravine Parkway South
Cottage Grove, MN 55016
651.458.2808
zdockter@cottagegrovemn.gov

**§ 1.1.10** The persons or entities, in addition to the Owner's representative, who are required to review the Construction Manager's submittals to the Owner are as follows:
*(List name, address, and other contact information.)*

**§ 1.1.11** The Owner shall retain the following consultants and Contractors:
*(List name, legal status, address, and other contact information.)*

**.1** Land Surveyor:

AIA Document C132 – 2019. Copyright © 1973, 1980, 1992, 2009, and 2019. All rights reserved. "The American Institute of Architects," "American Institute of Architects," "AIA," the AIA Logo, and "AIA Contract Documents" are trademarks of The American Institute of Architects. This document was produced at 10:08:29 CST on 02/25/2026 under Subscription No.20240079516 which expires on 12/13/2026, is not for resale, is licensed for one-time use only, and may only be used in accordance with the AIA Contract Documents® Terms of Service. To report copyright violations, e-mail docinfo@aiacontracts.com.
**User Notes:** (699f1e5e7f2986a885297bea)

**.2** Geotechnical Engineer:

**.3** Civil Engineer:

**.4** Contractors, as defined in Section 1.4:

**.5** Separate Contractors, as defined in Section 1.4:

**.6** Other, if any:
*(List any other consultants retained by the Owner.)*

**§ 1.1.12** The Construction Manager identifies the following representative in accordance with Section 2.5:
*(List name, address, and other contact information.)*

Mike Phillips
Sr. Project Manager
Kraus-Anderson Construction Company
501 South 8th Street
Minneapolis, MN 55404
651.447.3247
mike.phillips@krausanderson.com

**§ 1.1.13** The Construction Manager's staffing plan as required under Section 3.3.3 shall include:
*(List any specific requirements and personnel to be included in the staffing plan, if known.)*

**§ 1.1.14** The Construction Manager's consultants retained under Basic Services, if any:
*(List name, legal status, address, and other contact information of any consultants.)*

**§ 1.1.15** The Construction Manager's consultants retained under Supplemental Services:

AIA Document C132 – 2019. Copyright © 1973, 1980, 1992, 2009, and 2019. All rights reserved. "The American Institute of Architects," "American Institute of Architects," "AIA," the AIA Logo, and "AIA Contract Documents" are trademarks of The American Institute of Architects. This document was produced at 10:08:29 CST on 02/25/2026 under Subscription No.20240079516 which expires on 12/13/2026, is not for resale, is licensed for one-time use only, and may only be used in accordance with the AIA Contract Documents® Terms of Service. To report copyright violations, e-mail docinfo@aiacontracts.com.
**User Notes:** (699f1e5e7f2986a885297bea)

**§ 1.1.16** Other Initial Information on which this Agreement is based:

**§ 1.2** The Owner and Construction Manager may rely on the Initial Information. Both parties, however, recognize that the Initial Information may materially change and, in that event, the Owner and the Construction Manager shall, by appropriate written agreement appropriately adjust the Construction Manager's services, schedule for the Construction Manager's services, and the Construction Manager's compensation. The Owner shall adjust the Owner's budget for the Cost of the Work and the Owner's anticipated design and construction milestones, as necessary, to accommodate material changes in the Initial Information.

**§ 1.3** The Construction Manager shall assist the Owner and Architect in establishing protocols governing the transmission and use of, and reliance on, Instruments of Service or any other information or documentation in digital form.

**§ 1.3.1** Any use of, or reliance on, all or a portion of a building information model without agreement to protocols governing the use of, and reliance on, the information contained in the model shall be at the using or relying party's sole risk and without liability to the other party and its contractors or consultants, the authors of, or contributors to, the building information model, and each of their agents and employees.

**§ 1.4** The term "Contractors" refers to persons or entities who perform Work under contracts with the Owner that are administered by the Construction Manager and Architect. The term "Contractors" is used to refer to such persons or entities, whether singular or plural. The term does not include the Owner's own forces, or Separate Contractors, which are persons or entities who perform construction under separate contracts with the Owner not administered by the Construction Manager and Architect.

## ARTICLE 2 CONSTRUCTION MANAGER'S RESPONSIBILITIES

**§ 2.1** The Construction Manager shall provide the services as set forth in this Agreement.

**§ 2.2** The Construction Manager shall perform its services consistent with the skill and care ordinarily provided by construction managers practicing in the same or similar locality under the same or similar circumstances. The Construction Manager shall perform its services as expeditiously as is consistent with such skill and care and the orderly progress of the Project.

**§ 2.3** The Construction Manager shall provide its services in conjunction with the services of an Architect as described in AIA Document B132™–2019, Standard Form of Agreement Between Owner and Architect, Construction Manager as Adviser Edition. The Construction Manager shall not be responsible for actions taken by the Architect.

**§ 2.4** The Construction Manager shall coordinate its services with those services provided by the Owner, the Architect, the Contractors, and the Owner's other consultants and Separate Contractors. The Construction Manager shall be entitled to rely on, and shall not be responsible for, the accuracy and completeness of services and information furnished by the Owner, the Architect, and the Owner's other consultants and Separate Contractors. The Construction Manager shall provide prompt written notice to the Owner if the Construction Manager becomes aware of any error, omission, or inconsistency in such services or information.

**§ 2.5** The Construction Manager shall identify a representative authorized to act on behalf of the Construction Manager with respect to the Project.

**§ 2.6** The Construction Manager, as soon as practicable after execution of the Agreement, shall notify the Owner in writing of the names and qualifications of its proposed key staff members. Within 14 days of receipt of the names and qualifications of the Construction Manager's proposed key staff members, the Owner may reply to the Construction Manager in writing, stating (1) whether the Owner has reasonable objection to a proposed key staff member or (2) that the Owner requires additional time to review. Failure of the Owner to reply within the 14-day period shall constitute notice of no reasonable objection. The Construction Manager shall not staff any employees on the Project to whom the Owner has made reasonable and timely objection. The Construction Manager shall not change its key staff members without the Owner's consent, which shall not be unreasonably withheld or delayed.

AIA Document C132 – 2019. Copyright © 1973, 1980, 1992, 2009, and 2019. All rights reserved. "The American Institute of Architects," "American Institute of Architects," "AIA," the AIA Logo, and "AIA Contract Documents" are trademarks of The American Institute of Architects. This document was produced at 10:08:29 CST on 02/25/2026 under Subscription No.20240079516 which expires on 12/13/2026, is not for resale, is licensed for one-time use only, and may only be used in accordance with the AIA Contract Documents® Terms of Service. To report copyright violations, e-mail docinfo@aiacontracts.com.
**User Notes:** (699f1e5e7f2986a885297bea)

**§ 2.7** Except with the Owner's knowledge and consent, the Construction Manager shall not engage in any activity, or accept any employment, interest or contribution that would reasonably appear to compromise the Construction Manager's judgment with respect to this Project.

**§ 2.8** The Construction Manager shall maintain the following insurance until termination of this Agreement. If any of the requirements set forth below are in addition to the types and limits the Construction Manager normally maintains, the Owner shall pay the Construction Manager as set forth in section 11.7.

**§ 2.8.1** Commercial General Liability with policy limits of not less than One Million and 00/100 Dollars ($1,000,000.00) for each occurrence and Two Million and 00/100 Dollars ($2,000,000.00) in the aggregate for bodily injury and property damage.

**§ 2.8.2** Automobile Liability covering vehicles owned, and non-owned vehicles used, by the Construction Manager with policy limits of not less than One Million and 00/100 Dollars ($1,000,000.00) per accident for bodily injury, death of any person, and property damage arising out of the ownership, maintenance and use of those motor vehicles, along with any other statutorily required automobile coverage.

**§ 2.8.3** The Construction Manager may achieve the required limits and coverage for Commercial General Liability and Automobile Liability through a combination of primary and excess or umbrella liability insurance, provided such primary and excess or umbrella liability insurance policies result in the same or greater coverage as the coverages required under Sections 2.8.1 and 2.8.2, and in no event shall any excess or umbrella liability insurance provide narrower coverage than the primary policy. The excess policy shall not require the exhaustion of the underlying limits only through the actual payment by the underlying insurers.

**§ 2.8.4** Workers' Compensation at statutory limits and Employers Liability with policy limits not less than Five Hundred Thousand and 00/100 Dollars ($500,000.00) each accident, Five Hundred Thousand and 00/100 Dollars ($500,000.00) each employee, and Five Hundred Thousand and 00/100 Dollars ($500,000.00) policy limit.

**§ 2.8.5** Professional Liability covering negligent acts, errors and omissions in the performance of professional services with policy limits of not less than Five Million and 00/100 Dollars ($5,000,000.00) per claim and Five Million and 00/100 Dollars ($5,000,000.00) in the aggregate.

**§ 2.8.6 Reserved.**

**§ 2.8.7** The Construction Manager shall provide certificates of insurance to the Owner that evidence compliance with the requirements in this Section 2.8.

**§ 2.9** The Construction Manager shall assist the Owner, Architect, and other Project participants in establishing protocols for the development, use, transmission, reliance, and exchange of digital data, including building information models for the Project.

**§ 2.10** If a centralized electronic document management system will be used on the Project, the Construction Manager shall be responsible for managing and maintaining the centralized electronic document management system.

**§ 2.11** The Construction Manager shall retain all Project related documents and information it receives, and the Owner and Architect shall have access to the documents and information. The Construction Manager shall transmit the documents and information to the Owner at final completion.

## ARTICLE 3 SCOPE OF CONSTRUCTION MANAGER'S BASIC SERVICES

### § 3.1 Definition

The Construction Manager's Basic Services consist of those described in this Article 3, and include usual and customary Preconstruction and Construction Phase Services. Services not set forth in this Article 3 are Supplemental or Additional Services. The Owner, Construction Manager, and Contractors may agree, in consultation with the Architect, for the Construction Phase to commence prior to completion of the Preconstruction Phase, in which case, both phases will proceed concurrently.

### § 3.2 Preconstruction Phase

AIA Document C132 – 2019. Copyright © 1973, 1980, 1992, 2009, and 2019. All rights reserved. "The American Institute of Architects," "American Institute of Architects," "AIA," the AIA Logo, and "AIA Contract Documents" are trademarks of The American Institute of Architects. This document was produced at 10:08:29 CST on 02/25/2026 under Subscription No.20240079516 which expires on 12/13/2026, is not for resale, is licensed for one-time use only, and may only be used in accordance with the AIA Contract Documents® Terms of Service. To report copyright violations, e-mail docinfo@aiacontracts.com.
**User Notes:** (699f1e5e7f2986a885297bea)

**§ 3.2.1** The Construction Manager shall review the program furnished by the Owner and any evaluation of the Owner's program provided by the Architect, to ascertain the requirements of the Project and shall arrive at a mutual understanding of such requirements with the Owner and Architect.

**§ 3.2.2** The Construction Manager shall provide a preliminary evaluation of the Owner's program, schedule and construction budget requirements, each in terms of the other.

**§ 3.2.3** The Construction Manager shall prepare, and deliver to the Owner, for the Owner's approval, a written Construction Management Plan that includes, at a minimum, the following: (1) preliminary evaluations required in Section 3.2.2, (2) a Project schedule, (3) cost estimates, (4) recommendations for Project delivery method, and (5) Contractors' scopes of Work. The Construction Manager shall periodically update the Construction Management Plan, for the Owner's approval, over the course of the Project.

**§ 3.2.4** The Construction Manager shall prepare and periodically update the Project schedule included in the Construction Management Plan for the Architect's review and the Owner's acceptance. The Construction Manager shall obtain the Architect's approval for the portion of the Project schedule relating to the performance of the Architect's services. The Project schedule shall coordinate and integrate the Construction Manager's services, the Architect's services, other Owner consultants' services, and the Owner's responsibilities and highlight items that affect the Project's timely completion.

**§ 3.2.5** The Construction Manager shall update the Project schedule to include the components of the Work, including phasing of construction, times of commencement and completion required of each Contractor, ordering and delivery of products, including those that must be ordered in advance of construction, obtaining the required reviews and approvals of authorities having jurisdiction over the Project, and the occupancy requirements of the Owner.

**§ 3.2.6** Based on the preliminary design and information prepared or provided by the Architect and other Owner consultants, the Construction Manager shall prepare, for the Architect's review and Owner's approval, preliminary estimates of the Cost of the Work or the cost of program requirements using area, volume or similar conceptual estimating techniques, including the establishment of sufficient contingency to reasonably anticipate the development of the Project's design documents.

**§ 3.2.7** The Construction Manager shall review design documents during their development and advise the Owner and Architect on proposed site use and improvements, selection of materials, building systems, and equipment. The Construction Manager shall also provide recommendations to the Owner and Architect, consistent with the Project requirements, on constructability; availability of materials and labor; sequencing for phased construction; time requirements for procurement, installation and construction; and factors related to construction cost including, but not limited to, costs of alternative designs or materials, preliminary budgets, life-cycle data, and possible cost reductions.

**§ 3.2.8** The Construction Manager shall review recommendations for systems, materials, or equipment for the impact upon cost, schedule, sequencing, constructability, and coordination among the Contractors. The Construction Manager shall discuss its findings with the Owner and the Architect, and assist the Owner and Architect with resolution, as necessary, of any such impacts.

**§ 3.2.9** As the Architect progresses with the preparation of the Schematic Design, Design Development and Construction Documents, the Construction Manager shall prepare and update, at appropriate intervals agreed to by the Owner, Construction Manager and Architect, an estimate of the Cost of the Work with increasing detail and refinement. The Construction Manager shall include in the estimate those costs to allow for further development of the design, bidding or negotiating, price escalation, and market conditions. The estimate shall be provided for the Architect's review and the Owner's approval. The Construction Manager shall inform the Owner and Architect in the event that the estimate of Cost of the Work exceeds the latest approved Project budget, and make recommendations for corrective action.

**§ 3.2.10** As the Architect progresses with the preparation of the Schematic Design, Design Development and Construction Documents, the Construction Manager shall consult with the Owner and Architect and make recommendations whenever the Construction Manager determines that the design, or details, adversely affect cost, scope, schedule, constructability, or quality of the Project.

AIA Document C132 – 2019. Copyright © 1973, 1980, 1992, 2009, and 2019. All rights reserved. "The American Institute of Architects," "American Institute of Architects," "AIA," the AIA Logo, and "AIA Contract Documents" are trademarks of The American Institute of Architects. This document was produced at 10:08:29 CST on 02/25/2026 under Subscription No.20240079516 which expires on 12/13/2026, is not for resale, is licensed for one-time use only, and may only be used in accordance with the AIA Contract Documents® Terms of Service. To report copyright violations, e-mail docinfo@aiacontracts.com.
**User Notes:** (699f1e5e7f2986a885297bea)

**§ 3.2.11** The Construction Manager shall provide recommendations and information to the Owner and Architect regarding the assignment of responsibilities for temporary Project facilities and equipment, materials and services for common use of the Contractors. The Construction Manager shall verify that such requirements and assignment of responsibilities are included in the proposed Contract Documents.

**§ 3.2.12** The Construction Manager shall provide recommendations and information to the Owner regarding the allocation of responsibilities for safety programs among the Contractors.

**§ 3.2.13** The Construction Manager shall provide recommendations to the Owner on the division of the Project into individual contracts for the construction of various categories of Work, including the method to be used for selecting Contractors and awarding Contracts for Construction. The Construction Manager shall review the Drawings and Specifications and make recommendations as required to provide that (1) the Work of the Contractors is coordinated, (2) all requirements for the Project are assigned to the appropriate Contract, (3) the likelihood of jurisdictional disputes is minimized, and (4) proper coordination is provided for phased construction.

**§ 3.2.14** The Construction Manager shall make recommendations about, and coordinate the ordering and delivery of, materials in support of the schedule, including those that must be ordered in advance of construction.

**§ 3.2.15** The Construction Manager shall assist the Owner in selecting, retaining, and coordinating the professional services of surveyors, geotechnical engineers, special consultants, and construction materials testing required for the Project.

**§ 3.2.16** The Construction Manager shall provide an analysis of the types and quantities of labor required for the Project and review the availability of appropriate categories of labor required for critical phases. The Construction Manager shall make recommendations for actions designed to minimize adverse effects of labor shortages.

**§ 3.2.17** The Construction Manager shall assist the Owner in obtaining information regarding applicable requirements for equal employment opportunity programs, and other programs as may be required by governmental and quasi- governmental authorities for inclusion in the Contract Documents.

**§ 3.2.18** Following the Owner's approval of the Drawings and Specifications, the Construction Manager shall update and submit the latest estimate of the Cost of the Work and the Project schedule for the Architect's review and the Owner's approval.

**§ 3.2.19** The Construction Manager, in consultation with the Owner, shall develop bidders' interest in the Project and establish bidding schedules. The Construction Manager shall assist the Owner and the Architect with the development of the Bidding Documents, which consist of bidding requirements and proposed Contract Documents. The Construction Manager, with the assistance of the Architect, shall issue Bidding Documents to bidders and conduct pre-bid conferences with prospective bidders. The Construction Manager shall issue the current Project schedule with each set of Bidding Documents. The Construction Manager shall assist the Architect with regard to questions from bidders and with the issuance of addenda.

**§ 3.2.20** The Construction Manager shall submit a list of prospective bidders for the Architect's review and the Owner's approval.

**§ 3.2.21** The Construction Manager, with the assistance of the Architect, shall review bids, and prepare bid analyses, and make recommendations to the Owner for the Owner's award of Contracts for Construction or rejection of bids.

**§ 3.2.22** The Construction Manager, with the assistance of the Architect, shall assist the Owner in preparing Contracts for Construction. The Construction Manager shall advise the Owner on the acceptability of Subcontractors and material suppliers proposed by Contractors. The Owner will review and approve contracts consistent with the Owner's approval process.

**§ 3.2.23** The Construction Manager shall assist the Owner in obtaining building permits and special permits for permanent improvements, except for permits required to be obtained directly by the Contractors. The Construction Manager shall verify that the Owner has paid applicable fees and assessments. The Construction Manager shall assist the Owner and Architect in connection with the Owner's responsibility for filing documents required for the approvals of governmental authorities having jurisdiction over the Project.

AIA Document C132 – 2019. Copyright © 1973, 1980, 1992, 2009, and 2019. All rights reserved. "The American Institute of Architects," "American Institute of Architects," "AIA," the AIA Logo, and "AIA Contract Documents" are trademarks of The American Institute of Architects. This document was produced at 10:08:29 CST on 02/25/2026 under Subscription No.20240079516 which expires on 12/13/2026, is not for resale, is licensed for one-time use only, and may only be used in accordance with the AIA Contract Documents® Terms of Service. To report copyright violations, e-mail docinfo@aiacontracts.com.
**User Notes:** (699f1e5e7f2986a885297bea)

**§ 3.2.24** If the Owner identified a Sustainable Objective in Article 1, the Construction Manager shall fulfill its Preconstruction Phase responsibilities per the agreed-upon terms, conditions and services related to the Owner's Sustainable Objective.

**§ 3.3 Construction Phase**

**§ 3.3.1** The Construction Manager shall provide on-site administration of the Contracts for Construction in cooperation with the Architect as set forth below and in AIA Document A232™–2019, General Conditions of the Contract for Construction, Construction Manager as Adviser Edition. If the Owner and Contractor modify AIA Document A232–2019, those modifications shall not affect the Construction Manager's services under this Agreement unless the Owner and the Construction Manager amend this Agreement.

**§ 3.3.2** Subject to Section 4.2 and except as provided in Section 3.3.30, the Construction Manager's responsibility to provide Construction Phase Services commences with the award of the initial Contract for Construction and terminates on the date the Architect issues the final Certificate for Payment.

**§ 3.3.3** The Construction Manager shall provide a staffing plan to include one or more representatives who shall be in attendance at the Project site whenever the Work is being performed.

**§ 3.3.4** The Construction Manager shall provide administrative, management and related services to coordinate scheduled activities and responsibilities of the Contractors with each other and with those of the Construction Manager, the Owner and the Architect. The Construction Manager shall coordinate the activities of the Contractors in accordance with the latest approved Project schedule and the Contract Documents.

**§ 3.3.5** The Construction Manager shall review and analyze the construction schedules provided by the Contractors to update the Project schedule, incorporating the activities of the Owner, Architect, and Contractors on the Project, including activity sequences and durations, allocation of labor and materials, processing of Shop Drawings, Product Data and Samples, and delivery and procurement of products, including those that must be ordered in advance of construction. The Project schedule shall include the Owner's occupancy requirements showing portions of the Project having occupancy priority. The Construction Manager shall update and reissue the Project schedule as required to show current conditions. If an update indicates that the previously approved Project schedule may not be met, the Construction Manager shall recommend corrective action to the Owner and Architect.

**§ 3.3.6** The Construction Manager shall schedule and conduct meetings to discuss matters such as procedures, progress, coordination, and scheduling of the Work, and to develop solutions to issues identified. The Construction Manager shall prepare and promptly distribute minutes to the Owner, Architect and Contractors.

**§ 3.3.7** In accordance with the Contract Documents and the latest approved Project schedule, and utilizing information from the Contractors, the Construction Manager shall review, analyze, schedule and coordinate the overall sequence of construction and assignment of space in areas where the Contractors are performing Work.

**§ 3.3.8** The Construction Manager shall coordinate all tests and inspections required by the Contract Documents or governmental authorities, observe the on-site testing and inspections, and arrange for the delivery of test and inspection reports to the Owner and Architect.

**§ 3.3.9** The Construction Manager shall endeavor to obtain satisfactory performance from each of the Contractors. The Construction Manager shall recommend courses of action to the Owner when requirements of a Contract are not being fulfilled.

**§ 3.3.10** The Construction Manager shall monitor and evaluate actual costs for activities in progress and estimates for uncompleted tasks and advise the Owner and Architect as to variances between actual costs and budgeted or estimated costs. If a Contractor is required to submit a Control Estimate, the Construction Manager shall meet with the Owner and Contractor to review the Control Estimate. The Construction Manager shall promptly notify the Contractor if there are any inconsistencies or inaccuracies in the information presented. The Construction Manager shall also report the Contractor's cost control information to the Owner.

**§ 3.3.11** The Construction Manager shall develop cash flow reports and forecasts for the Project and include them in the Construction Manager's progress reports.

AIA Document C132 – 2019. Copyright © 1973, 1980, 1992, 2009, and 2019. All rights reserved. "The American Institute of Architects," "American Institute of Architects," "AIA," the AIA Logo, and "AIA Contract Documents" are trademarks of The American Institute of Architects. This document was produced at 10:08:29 CST on 02/25/2026 under Subscription No.20240079516 which expires on 12/13/2026, is not for resale, is licensed for one-time use only, and may only be used in accordance with the AIA Contract Documents® Terms of Service. To report copyright violations, e-mail docinfo@aiacontracts.com.
**User Notes:** (699f1e5e7f2986a885297bea)

**§ 3.3.12** The Construction Manager shall maintain accounting records on authorized Work performed under unit costs, additional Work performed on the basis of actual costs of labor and materials, and other Work requiring accounting records.

**§ 3.3.12.1** The Construction Manager shall develop and implement procedures for the review and processing of Applications for Payment by Contractors for progress and final payments.

**§ 3.3.12.2** Not more frequently than monthly, the Construction Manager shall review and certify the amounts due the respective Contractors as follows:

**.1** Where there is only one Contractor responsible for performing the Work, the Construction Manager shall, within seven days after the Construction Manager receives the Contractor's Application for Payment, review the Application, certify the amount the Construction Manager determines is due the Contractor, and forward the Contractor's Application and Certificate for Payment to the Architect.

**.2** Where there is more than one Contractor responsible for performing different portions of the Project, the Construction Manager shall, within seven days after the Construction Manager receives each Contractor's Application for Payment: (1) review the Applications and certify the amount the Construction Manager determines is due each Contractor; (2) prepare a Summary of Contractors' Applications for Payment by summarizing information from each Contractor's Application for Payment; (3) prepare a Project Application and Certificate for Payment; (4) certify the total amount the Construction Manager determines is due all Contractors collectively; and (5) forward the Summary of Contractors' Applications for Payment and Project Application and Certificate for Payment to the Architect.

**§ 3.3.12.3** The Construction Manager's certification for payment shall constitute a representation to the Owner, based on the Construction Manager's evaluations of the Work and on the data comprising the Contractors' Applications for Payment, that, to the best of the Construction Manager's knowledge, information and belief, the Work has progressed to the point indicated, the quality of the Work is in accordance with the Contract Documents, and the Contractors are entitled to payment in the amount certified. The foregoing representations are subject to (1) an evaluation of the Work for conformance with the Contract Documents upon Substantial Completion; (2) results of subsequent tests and inspections; (3) correction of minor deviations from the Contract Documents prior to completion; and (4) specific qualifications expressed by the Construction Manager. The issuance of a Certificate for Payment shall further constitute a recommendation to the Architect and Owner that the Contractor be paid the amount certified.

**§ 3.3.12.4** The certification of an Application for Payment or a Project Application for Payment by the Construction Manager shall not be a representation that the Construction Manager has (1) made exhaustive or continuous on-site inspections to check the quality or quantity of the Work; (2) reviewed construction means, methods, techniques, procedures, or sequences for a Contractor's own Work; (3) reviewed copies of requisitions received from Subcontractors and suppliers and other data requested by the Owner to substantiate each Contractor's right to payment; or (4) ascertained how or for what purpose that Contractor has used money previously paid on account of the Contract Sum.

**§ 3.3.13** The Construction Manager shall obtain and review the safety programs developed by each Contractor solely and exclusively for purposes of coordinating the safety programs with those of the other Contractors and for making recommendations for any additional safety measures to be considered in the Work of the Contractors. The Construction Manager's responsibilities for coordination of safety programs shall not extend to direct control over or charge of the acts or omissions of the Contractors, Subcontractors, agents or employees of the Contractors or Subcontractors, or any other persons performing portions of the Work and not directly employed by the Construction Manager.

**§ 3.3.14** The Construction Manager shall determine in general that the Work of each Contractor is being performed in accordance with the requirements of the Contract Documents and notify the Owner, Contractor and Architect of defects and deficiencies in the Work. The Construction Manager shall have the authority to reject Work that does not conform to the Contract Documents and shall notify the Architect about the rejection. The failure of the Construction Manager to reject Work shall not constitute acceptance of the Work. The Construction Manager shall record any rejection of Work in its daily log and include information regarding the rejected Work in its progress reports to the Architect and Owner pursuant to Section 3.3.22.1. Upon written authorization from the

AIA Document C132 – 2019. Copyright © 1973, 1980, 1992, 2009, and 2019. All rights reserved. "The American Institute of Architects," "American Institute of Architects," "AIA," the AIA Logo, and "AIA Contract Documents" are trademarks of The American Institute of Architects. This document was produced at 10:08:29 CST on 02/25/2026 under Subscription No.20240079516 which expires on 12/13/2026, is not for resale, is licensed for one-time use only, and may only be used in accordance with the AIA Contract Documents® Terms of Service. To report copyright violations, e-mail docinfo@aiacontracts.com.
**User Notes:** (699f1e5e7f2986a885297bea)

Owner, the Construction Manager may require and make arrangements for additional inspection or testing of the Work in accordance with the provisions of the Contract Documents, whether or not the Work is fabricated, installed or completed, and the Construction Manager shall give timely notice to the Architect of when and where the tests and inspections are to be made so that the Architect may be present for such procedures.

**§ 3.3.15** The Construction Manager shall advise and consult with the Owner and Architect during the performance of its Construction Phase Services. The Construction Manager shall have authority to act on behalf of the Owner only to the extent provided in this Agreement. The Construction Manager shall not have control over, charge of, or responsibility for the construction means, methods, techniques, sequences or procedures, or for safety precautions and programs in connection with the Work of each of the Contractors, since these are solely the Contractor's rights and responsibilities under the Contract Documents. The Construction Manager shall not be responsible for a Contractor's failure to perform the Work in accordance with the requirements of the Contract Documents. The Construction Manager shall be responsible to the Owner for the Construction Manager's negligent acts or omissions, but shall not have control over or charge of, and shall not be responsible for, acts or omissions of the Contractors, Subcontractors, or their agents or employees, or any other persons or entities performing portions of the Work.

**§ 3.3.16** The Construction Manager shall transmit to the Architect requests for interpretations, and requests for information of the meaning and intent of the Drawings and Specifications. The Construction Manager shall assist in the resolution of questions that may arise.

**§ 3.3.17** The Construction Manager shall review requests for changes, assist in negotiating Contractors' proposals, submit recommendations to the Architect and Owner, and, if the proposed changes are accepted or required by the Owner, prepare Change Orders or Construction Change Directives that incorporate the Architect's modifications to the Contract Documents.

**§ 3.3.18** The Construction Manager shall assist the Initial Decision Maker in the review, evaluation and documentation of Claims, subject to Section 4.2.2.7.

**§ 3.3.19** Utilizing the submittal schedules provided by each Contractor, the Construction Manager shall prepare, and revise as necessary, a Project submittal schedule incorporating information from the Owner, Owner's consultants, Owner's Separate Contractors and vendors, governmental agencies, and participants in the Project under the management of the Construction Manager. The Project submittal schedule and any revisions shall be submitted to the Architect for approval.

**§ 3.3.20** The Construction Manager shall promptly review all Shop Drawings, Product Data, Samples, and other submittals from the Contractors for compliance with the submittal requirements of the Contract, coordinate submittals with information contained in related documents, and transmit to the Architect those that the Construction Manager recommends for approval. **T**he Construction Manager's actions shall be taken in accordance with the Project submittal schedule approved by the Architect, or in the absence of an approved Project submittal schedule, with such reasonable promptness as to cause no delay in the Work or in the activities of the Contractors, the Owner, or the Architect.

**§ 3.3.20.1** If professional design services or certifications by a design professional related to systems, materials, or equipment are specifically required of the Contractors by the Contract Documents, the Construction Manager shall review those submittals for sequencing, constructability, and coordination impacts on the other Contractors. The Construction Manager shall discuss its findings with the Owner and the Architect, and assist the Owner and the Architect with resolution, as necessary, of any such impacts.

**§ 3.3.21** The Construction Manager shall keep a daily log containing a record of weather, each Contractor's Work on the site, number of workers, identification of equipment, Work accomplished, problems encountered, and other similar relevant data as the Owner may require.

**§ 3.3.21.1** The Construction Manager shall collect, review for accuracy, and compile the Contractors' daily logs; and include them in the Construction Manager's reports prepared and submitted in accordance with section 3.3.21.2.

**§ 3.3.21.2** The Construction Manager shall record the progress of the Project. On a monthly basis, or otherwise as agreed to by the Owner, the Construction Manager shall submit written progress reports to the Owner and

AIA Document C132 – 2019. Copyright © 1973, 1980, 1992, 2009, and 2019. All rights reserved. "The American Institute of Architects," "American Institute of Architects," "AIA," the AIA Logo, and "AIA Contract Documents" are trademarks of The American Institute of Architects. This document was produced at 10:08:29 CST on 02/25/2026 under Subscription No.20240079516 which expires on 12/13/2026, is not for resale, is licensed for one-time use only, and may only be used in accordance with the AIA Contract Documents® Terms of Service. To report copyright violations, e-mail docinfo@aiacontracts.com.
**User Notes:** (699f1e5e7f2986a885297bea)

Architect, showing percentages of completion and other information identified below:

.1 Work completed for the period;
.2 Project schedule status;
.3 Submittal schedule and status report, including a summary of remaining and outstanding submittals;
.4 Request for information, Change Order, and Construction Change Directive status reports;
.5 Tests and inspection reports;
.6 Status report of nonconforming and rejected Work;
.7 Daily logs;
.8 Summary of all Contractors' Applications for Payment;
.9 Cumulative total of the Cost of the Work to date including the Construction Manager's compensation and reimbursable expenses at the job site, if any;
.10 Cash-flow and forecast reports;
.11 Photographs to document the progress of the Project;
.12 Status reports on permits and approvals of authorities having jurisdiction; and
.13 Any other items the Owner may require:

**§ 3.3.21.3** In addition, for Projects constructed on the basis of the Cost of the Work, the Construction Manager shall include the following additional information in its progress reports:

.1 Contractors' work force reports;
.2 Equipment utilization report;
.3 Cost summary, comparing actual costs to updated cost estimates; and
.4 Any other items as the Owner may require:

**§ 3.3.22** Utilizing the documents provided by the Contractors, the Construction Manager shall make available, at the Project site, the Contract Documents, including Change Orders, Construction Change Directives, and other Modifications, in good order and marked currently to indicate field changes and selections made during construction, and the approved Shop Drawings, Product Data, Samples, and similar required submittals. These shall be in electronic form or paper copy, available to the Owner, Architect, and Contractors. Upon completion of the Project, the Construction Manager shall deliver them to the Owner.

**§ 3.3.23** The Construction Manager shall arrange for the delivery, storage, protection and security of Owner-purchased materials, systems and equipment that are a part of the Project until such items are incorporated into the Work.

**§ 3.3.24** With the Owner's maintenance personnel, the Construction Manager shall observe the Contractors' final testing and start-up of utilities, operational systems and equipment and observe any commissioning as the Contract Documents may require.

**§ 3.3.25** When the Construction Manager considers each Contractor's Work or a designated portion thereof substantially complete, the Construction Manager shall, jointly with that Contractor, prepare for the Architect a list of incomplete or unsatisfactory items and a schedule for their completion. The Construction Manager shall assist the Architect in conducting inspections to determine whether the Work or designated portion thereof is substantially complete.

**§ 3.3.26** When the Work of all of the Contractors, or designated portion thereof, is substantially complete, the Construction Manager shall prepare, and the Construction Manager and Architect shall execute, a Certificate of Substantial Completion. The Construction Manager shall submit the executed Certificate to the Owner and Contractors. The Construction Manager shall coordinate the correction and completion of the Work. Following issuance of a Certificate of Substantial Completion of the Work or a designated portion thereof, the Construction Manager shall perform an inspection to confirm the completion of the Work of the Contractors and make recommendations to the Architect when the Work of all of the Contractors is ready for final inspection. The Construction Manager shall assist the Architect in conducting the final inspection.

**§ 3.3.27** The Construction Manager shall forward to the Owner, with a copy to the Architect, the following information received from the Contractors: (1) certificates of insurance ; (2) consent of surety or sureties, if any, to

AIA Document C132 – 2019. Copyright © 1973, 1980, 1992, 2009, and 2019. All rights reserved. "The American Institute of Architects," "American Institute of Architects," "AIA," the AIA Logo, and "AIA Contract Documents" are trademarks of The American Institute of Architects. This document was produced at 10:08:29 CST on 02/25/2026 under Subscription No.20240079516 which expires on 12/13/2026, is not for resale, is licensed for one-time use only, and may only be used in accordance with the AIA Contract Documents® Terms of Service. To report copyright violations, e-mail docinfo@aiacontracts.com.
**User Notes:** (699f1e5e7f2986a885297bea)

reduction in or partial release of retainage or the making of final payment; (3) affidavits, receipts, releases and waivers of liens or bonds indemnifying the Owner against liens; and (4) any other documentation required of the Contractors under the Contract Documents, including warranties and similar submittals.

**§ 3.3.28** The Construction Manager shall coordinate receipt, and delivery to the Owner, of other items provided by the Contractors, such as keys, manuals, and record drawings. The Construction Manager shall forward to the Architect a final Project Application for Payment and Project Certificate for Payment, or a final Application for Payment and final Certificate for Payment, upon the Contractors' compliance with the requirements of the Contract Documents.

**§ 3.3.29** Duties, responsibilities and limitations of authority of the Construction Manager as set forth in the Contract Documents shall not be restricted, modified or extended without written consent of the Owner and Construction Manager. Consent shall not be unreasonably withheld.

**§ 3.3.30** Upon request of the Owner, and prior to the expiration of one year from the date of Substantial Completion, the Construction Manager shall, without additional compensation, conduct a meeting with the Owner and Architect to review the facility operations and performance.

## ARTICLE 4 SUPPLEMENTAL AND ADDITIONAL SERVICES

### § 4.1 Supplemental Services

**§ 4.1.1** The services listed below are not included in Basic Services but may be required for the Project. The Construction Manager shall provide the listed Supplemental Services only if specifically designated in the table below as the Construction Manager's responsibility, and the Owner shall compensate the Construction Manager as provided in Section 11.2. Unless otherwise specifically addressed in this Agreement, if neither the Owner nor the Construction Manager is designated, the parties agree that the listed Supplemental Service is not being provided for the Project.

*(Designate the Construction Manager's Supplemental Services and the Owner's Supplemental Services required for the Project by indicating whether the Construction Manager or Owner shall be responsible for providing the identified Supplemental Service. Insert a description of the Supplemental Services in Section 4.1.2 below or attach the description of services as an exhibit to this Agreement.)*

| Supplemental Services | | Responsibility *(Construction Manager, Owner or not provided)* |
|---|---|---|
| **§ 4.1.1.1** | Measured drawings | Owner |
| **§ 4.1.1.2** | Tenant-related services | Owner, if required |
| **§ 4.1.1.3** | Commissioning | Owner, if required |
| **§ 4.1.1.4** | Development of a commissioning plan | Owner, if required |
| **§ 4.1.1.5** | Sustainable Project Services pursuant to Section 4.1.3 | N/A |
| **§ 4.1.1.6** | Furniture, furnishings and equipment delivery, and installation coordination | Construction Manager, if required |
| **§ 4.1.1.7** | Furniture, furnishings and equipment procurement assistance | N/A |
| **§ 4.1.1.8** | Assistance with site selection | N/A |
| **§ 4.1.1.9** | Assistance with selection of the Architect | Owner |
| **§ 4.1.1.10** | Furnish land survey | Owner, if required |
| **§ 4.1.1.11** | Furnish geotechnical engineering services | Owner |
| **§ 4.1.1.12** | Provide insurance advice | Owner, if required |
| **§ 4.1.1.13** | Provide supplemental Project risk analysis and mitigation strategies | Owner, if required |
| **§ 4.1.1.14** | Stakeholder relationships management | N/A |
| **§ 4.1.1.15** | Owner moving coordination | N/A |
| **§ 4.1.1.16** | Coordination of Owner's Separate Contractors | Construction Manager, if required |
| **§ 4.1.1.17** | Other Supplemental Services | N/A |
| | | |

### § 4.1.2 Description of Supplemental Services

**§ 4.1.2.1** A description of each Supplemental Service identified in Section 4.1.1 as the Construction Manager's

AIA Document C132 – 2019. Copyright © 1973, 1980, 1992, 2009, and 2019. All rights reserved. "The American Institute of Architects," "American Institute of Architects," "AIA," the AIA Logo, and "AIA Contract Documents" are trademarks of The American Institute of Architects. This document was produced at 10:08:29 CST on 02/25/2026 under Subscription No.20240079516 which expires on 12/13/2026, is not for resale, is licensed for one-time use only, and may only be used in accordance with the AIA Contract Documents® Terms of Service. To report copyright violations, e-mail docinfo@aiacontracts.com.
**User Notes:** (699f1e5e7f2986a885297bea)

responsibility is provided below.
*(Describe in detail the Construction Manager's Supplemental Services identified in Section 4.1.1 or, if set forth in an exhibit, identify the exhibit.)*

**§ 4.1.2.2** A description of each Supplemental Service identified in Section 4.1.1 as the Owner's responsibility is provided below.
*(Describe in detail the Owner's Supplemental Services identified in Section 4.1.1 or, if set forth in an exhibit, identify the exhibit.)*

**§ 4.1.3** If the Owner identified a Sustainable Objective in Article 1, the Construction Manager shall provide, as a Supplemental Service, the Sustainability Services per the agreed-upon terms, conditions and services related to the Owner's Sustainable Objective. The Owner shall compensate the Construction Manager as provided in Section 11.2.

**§ 4.2 Construction Manager's Additional Services**

**§ 4.2.1** The Construction Manager may provide Additional Services after execution of this Agreement, without invalidating this Agreement. Except to the extent services are required due to the fault of the Construction Manager, any Additional Services provided in accordance with this Section 4.2 shall entitle the Construction Manager to compensation pursuant to Section 11.3.

**§ 4.2.2** Upon recognizing the need to perform the following Additional Services, the Construction Manager shall notify the Owner with reasonable promptness and explain the facts and circumstances giving rise to the need. The Construction Manager shall not proceed to provide the following Additional Services until the Construction Manager receives the Owner's written authorization:

**.1** Services necessitated by a change in the Initial Information, previous instructions or approvals given by the Owner, or a material change in the Project including size, quality, complexity, the Owner's schedule or budget for Cost of the Work, or procurement or delivery method, or bid packages in addition to those listed in Section 1.1.6. Services necessitated by sections 6.4 and 6.6 shall not be considered additional services;

**.2** Services necessitated by the enactment or revision of codes, laws, regulations or official interpretations after the date of this Agreement;

**.3** Services necessitated by decisions of the Owner not rendered in a timely manner or any other failure of performance on the part of the Owner or the Owner's other consultants or contractors;

**.4** Preparation of documentation for alternate bid or proposal requests proposed by the Owner;

**.5** Preparation for, and attendance at, a public presentation, meeting or hearing;

**.6** Preparation for, and attendance at, a dispute resolution proceeding or legal proceeding, except where the Construction Manager is party thereto;

**.7** Consultation concerning replacement of Work resulting from fire or other cause during construction and furnishing services required in connection with the replacement of such Work; or

**.8** Assistance to the Initial Decision Maker.

**§ 4.2.3** To avoid delay in the Construction Phase, the Construction Manager shall provide the following Additional Services, notify the Owner with reasonable promptness, and explain the facts and circumstances giving rise to the need. If, upon receipt of the Construction Manager's notice, the Owner determines that all or parts of the services are not required, the Owner shall give prompt written notice to the Construction Manager of the Owner's determination. The Owner shall compensate the Construction Manager for the services provided prior to the Construction Manager's receipt of the Owner's notice:

**.1** Providing assistance to the Initial Decision Maker in evaluating an extensive number of Claims submitted by a Contractor or others in connection with the Work.

**.2** Services required in an emergency to coordinate the activities of a Contractor or Contractors in the event of risk of personal injury or serious property damage, consistent with Section 3.3.15.

**§ 4.2.4** Except for services required under Section 3.3.30, Construction Phase Services provided more than 60 days after (1) the date of Substantial Completion of the Work, or (2) the anticipated date of Substantial Completion identified in the Initial Information, whichever is earlier, shall be compensated as Additional Services

AIA Document C132 – 2019. Copyright © 1973, 1980, 1992, 2009, and 2019. All rights reserved. "The American Institute of Architects," "American Institute of Architects," "AIA," the AIA Logo, and "AIA Contract Documents" are trademarks of The American Institute of Architects. This document was produced at 10:08:29 CST on 02/25/2026 under Subscription No.20240079516 which expires on 12/13/2026, is not for resale, is licensed for one-time use only, and may only be used in accordance with the AIA Contract Documents® Terms of Service. To report copyright violations, e-mail docinfo@aiacontracts.com.
**User Notes:** (699f1e5e7f2986a885297bea)

to the extent the Construction Manager incurs additional cost in providing those Construction Phase Services.

**§ 4.2.5** If the services covered by this Agreement have not been completed within seventeen ( 17 ) months of the date of this Agreement, through no fault of the Construction Manager, extension of the Construction Manager's services beyond that time shall be compensated as Additional Services.

## ARTICLE 5 OWNER'S RESPONSIBILITIES

**§ 5.1** Unless otherwise provided for under this Agreement, the Owner shall provide information in a timely manner regarding requirements for and limitations on the Project, including a written program, which shall set forth the Owner's objectives; schedule; constraints and criteria; special equipment; systems; and site requirements.

**§ 5.2** The Owner shall establish the Owner's budget for the Project, including (1) the budget for the Cost of the Work as defined in Section 6.1; (2) the Owner's other costs; and (3) reasonable contingencies related to all of these costs. The Owner shall update the Owner's budget for the Project as necessary throughout the duration of the Project until final completion. If the Owner significantly increases or decreases the Owner's budget for the Cost of the Work, the Owner shall notify the Construction Manager and Architect. The Owner and the Architect, in consultation with the Construction Manager, shall thereafter agree to a corresponding change in the Project's scope and quality.

**§ 5.3** The Owner acknowledges that accelerated, phased, or fast-track design and construction provides a benefit, but also carries with it the risk of additional costs. If the Owner selects accelerated, phased or fast-track scheduling, the Owner agrees to include in the budget for the Project sufficient contingencies to cover such costs.

**§ 5.4** The Owner shall retain an Architect to provide services, duties and responsibilities as described in AIA Document B132–2019, Standard Form of Agreement Between Owner and Architect, Construction Manager as Adviser Edition. The Owner shall provide the Construction Manager with a copy of the scope of services in the agreement executed between the Owner and Architect, and any further modifications to the Architect's scope of services in the agreement.

**§ 5.5** The Owner shall identify a representative authorized to act on the Owner's behalf with respect to the Project. The Owner shall render decisions pertaining to documents the Construction Manager submits in a timely manner in order to avoid unreasonable delay in the orderly and sequential progress of the Construction Manager's services.

**§ 5.6** Unless otherwise required by this Agreement to be provided by the Construction Manager, the Owner shall furnish surveys to describe physical characteristics, legal limitations and utility locations for the site of the Project, and a written legal description of the site. The surveys and legal information shall include, as applicable, grades and lines of streets, alleys, pavements and adjoining property and structures; designated wetlands; adjacent drainage; rights-of-way, restrictions, easements, encroachments, zoning, deed restrictions, boundaries, and contours of the site; locations, dimensions, and other necessary data with respect to existing buildings, other improvements and trees; and information concerning available utility services and lines, both public and private, above and below grade, including inverts and depths. All the information on the survey shall be referenced to a Project benchmark.

**§ 5.7** Unless otherwise required by this Agreement to be provided by the Construction Manager, the Owner shall furnish services of geotechnical engineers, which may include test borings, test pits, determinations of soil bearing values, percolation tests, evaluations of hazardous materials, seismic evaluation, ground corrosion tests and resistivity tests, including necessary operations for anticipating subsoil conditions, with written reports and appropriate recommendations.

**§ 5.8** The Owner shall provide the Supplemental Services designated as the Owner's responsibility in Section 4.1.1.

**§ 5.9** If the Owner identified a Sustainable Objective in Article 1, the Owner shall fulfill its responsibilities as required in AIA Document E235™–2019, Sustainable Projects Exhibit, Construction Manager as Adviser Edition, attached to this Agreement.

**§ 5.10** The Owner shall coordinate the services of its own consultants with those services provided by the Construction Manager. Upon the Construction Manager's request, the Owner shall furnish copies of the scope of

AIA Document C132 – 2019. Copyright © 1973, 1980, 1992, 2009, and 2019. All rights reserved. "The American Institute of Architects," "American Institute of Architects," "AIA," the AIA Logo, and "AIA Contract Documents" are trademarks of The American Institute of Architects. This document was produced at 10:08:29 CST on 02/25/2026 under Subscription No.20240079516 which expires on 12/13/2026, is not for resale, is licensed for one-time use only, and may only be used in accordance with the AIA Contract Documents® Terms of Service. To report copyright violations, e-mail docinfo@aiacontracts.com.
**User Notes:** (699f1e5e7f2986a885297bea)

services in the contracts between the Owner and the Owner's consultants. The Owner shall furnish the services of consultants other than those designated as the responsibility of the Construction Manager in this Agreement, or authorize the Construction Manager to furnish them as an Additional Service, when the Construction Manager requests such services and demonstrates that they are reasonably required by the scope of the Project. The Owner shall require that its consultants and contractors maintain insurance, including professional liability insurance, as appropriate to the services or work provided.

**§ 5.11** The Owner shall furnish tests, inspections and reports required by law or the Contract Documents, such as structural, mechanical, and chemical tests, tests for air and water pollution, and tests for hazardous materials.

**§ 5.12** The Owner shall furnish all legal, insurance and accounting services, including auditing services, that may be reasonably necessary at any time for the Project to meet the Owner's needs and interests.

**§ 5.13** The Owner shall provide prompt written notice to the Construction Manager and Architect if the Owner becomes aware of any fault or defect in the Project, including errors, omissions or inconsistencies in the Architect's Instruments of Service or any fault or defect in the Construction Manager's services.

**§ 5.14** The Owner reserves the right to perform construction and operations related to the Project with the Owner's own forces, and to award contracts in connection with the Project which are not part of the Construction Manager's responsibilities under this Agreement. The Construction Manager shall notify the Owner if any such independent action will interfere with the Construction Manager's ability to perform the Construction Manager's responsibilities under this Agreement. When performing construction or operations related to the Project, the Owner agrees to be subject to the same obligations and to have the same rights as the Contractors.

**§ 5.15** The Owner shall communicate with the Contractors and the Construction Manager's consultants through the Construction Manager about matters arising out of or relating to the Contract Documents. The Owner and Construction Manager shall include the Architect in all communications that relate to or affect the Architect's services or professional responsibilities. The Owner shall promptly notify the Architect of the substance of any direct communications between the Owner and the Construction Manager otherwise relating to the Project. Communications by and with the Architect's consultants shall be through the Architect.

**§ 5.16** Before executing the Contracts for Construction, the Owner shall coordinate the Construction Manager's duties and responsibilities set forth in the Contracts for Construction with the Construction Manager's services set forth in this Agreement. The Owner shall provide the Construction Manager a copy of the executed agreements between the Owner and Contractors, including the General Conditions of the Contracts for Construction.

**§ 5.17** The Owner shall provide the Construction Manager access to the Project site prior to commencement of the Work and shall obligate the Contractors to provide the Construction Manager access to the Work wherever it is in preparation or progress.

**§ 5.18** Within 15 days after receipt of a written request from the Construction Manager, the Owner shall furnish the requested information as necessary and relevant for the Construction Manager to evaluate, give notice of, or enforce lien rights.

**§ 5.19** The services, information and reports provided by the Owner pursuant to this Article 5 shall be provided at the Owner's expense, and the Construction Manager shall be entitled to rely upon the accuracy and completeness thereof.

## ARTICLE 6 COST OF THE WORK

**§ 6.1** For purposes of this Agreement, the Cost of the Work shall be the total cost to the Owner to construct all elements of the Project designed or specified by the Architect and shall include the Contractors' general conditions costs, overhead and profit. The Cost of the Work also includes the reasonable value of labor, materials, and equipment, donated to, or otherwise furnished by, the Owner. The Cost of the Work includes the compensation of the Construction Manager and Construction Manager's Consultants during the Construction Phase only, including compensation for reimbursable expenses at the job site, if any. The Cost of the Work does not include the compensation of the Architect; the costs of the land, rights-of-way, financing, or contingencies for changes in the Work; or other costs that are the responsibility of the Owner.

**§ 6.2** The Owner's budget for the Cost of the Work is provided in Initial Information, and shall be adjusted

AIA Document C132 – 2019. Copyright © 1973, 1980, 1992, 2009, and 2019. All rights reserved. "The American Institute of Architects," "American Institute of Architects," "AIA," the AIA Logo, and "AIA Contract Documents" are trademarks of The American Institute of Architects. This document was produced at 10:08:29 CST on 02/25/2026 under Subscription No.20240079516 which expires on 12/13/2026, is not for resale, is licensed for one-time use only, and may only be used in accordance with the AIA Contract Documents® Terms of Service. To report copyright violations, e-mail docinfo@aiacontracts.com.
**User Notes:** (699f1e5e7f2986a885297bea)

throughout the Project as required under Sections 5.2 and 6.4. Evaluations of the Owner's budget for the Cost of the Work, and the estimates of the Cost of the Work prepared by the Construction Manager, represent the Construction Manager's judgment as a person or entity familiar with the construction industry. It is recognized, however, that neither the Construction Manager nor the Owner has control over the cost of labor, materials; or equipment; the Contractors' methods of determining bid prices; or competitive bidding, market, or negotiating conditions. Accordingly, the Construction Manager cannot and does not warrant or represent that bids or negotiated prices will not vary from the Owner's budget for the Cost of the Work, or from any estimate of the Cost of the Work, or evaluation, prepared or agreed to by the Construction Manager.

**§ 6.3** If the Architect is providing cost estimating services as a Supplemental Service, and a discrepancy exists between the Construction Manager's cost estimates and the Architect's cost estimates, the Construction Manager and the Architect shall work together to reconcile the cost estimates.

**§ 6.4** If the Construction Manager's estimate of the Cost of the Work exceeds the Owner's budget for the Cost of the Work, the Construction Manager, in consultation with the Architect, shall make appropriate recommendations to the Owner to adjust the Project's size, quality, or budget for the Cost of the Work, and the Owner shall cooperate with the Construction Manager and Architect in making such adjustments.

**§ 6.5** If the Construction Manager's estimate of the Cost of the Work exceeds the Owner's budget for the Cost of the Work, the Owner shall

**.1** give written approval of an increase in the budget for the Cost of the Work;
**.2** terminate in accordance with Section 9.5;
**.3** in consultation with the Construction Manager and Architect, revise the Project program, scope, or quality as required to reduce the Cost of the Work; or
**.4** implement any other mutually acceptable alternative.

**§ 6.6** If the Owner chooses to revise the Project program, scope, or quality to reduce the Cost of the Work pursuant to Section 6.5.3, or if the bids or proposals received from the prospective Contractors, in the aggregate, exceed the Owner's budget for the Cost of the Work, and the Owner chooses to revise the Project program, scope, or quality to reduce the Cost of the Work , the Construction Manager shall cooperate with the Owner and Architect to develop the necessary revisions, update the cost estimate, and obtain additional bids. The Construction Manager will perform the services described in Sections 6.4 and 6.6 without additional compensation.

## ARTICLE 7 COPYRIGHTS AND LICENSES

The Construction Manager and the Construction Manager's consultants, if any, shall not own or claim a copyright in the Instruments of Service. The Construction Manager, the Construction Manager's consultants, if any, and the Owner warrant that in transmitting Instruments of Service, or any other information, the transmitting party is the copyright owner of such information or has permission from the copyright owner to transmit such information for its use on the Project.

## ARTICLE 8 CLAIMS AND DISPUTES

### § 8.1 General

**§ 8.1.1** The Owner and Construction Manager shall commence all claims and causes of action against the other and arising out of or related to this Agreement, whether in contract, tort, or otherwise, in accordance with the requirements of the binding dispute resolution method selected in this Agreement and within the period specified by applicable law, but in any case not more than 10 years after the date of Substantial Completion of the Work. The Owner and Construction Manager waive all claims and causes of action not commenced in accordance with this Section 8.1.1.

**§ 8.1.2** To the extent damages are covered by property insurance, the Owner and Construction Manager waive all rights against each other and against the contractors, consultants, agents, and employees of the other for damages, except such rights as they may have to the proceeds of such insurance as set forth in AIA Document A232–2019, General Conditions of the Contract for Construction. The Owner or the Construction Manager, as appropriate, shall require of the contractors, consultants, agents, and employees of any of them, similar waivers in favor of the other parties enumerated herein.

**§ 8.1.3** The Construction Manager shall indemnify and hold the Owner and the Owner's officers and employees harmless from and against damages, losses and judgments arising from claims by third parties, including

AIA Document C132 – 2019. Copyright © 1973, 1980, 1992, 2009, and 2019. All rights reserved. "The American Institute of Architects," "American Institute of Architects," "AIA," the AIA Logo, and "AIA Contract Documents" are trademarks of The American Institute of Architects. This document was produced at 10:08:29 CST on 02/25/2026 under Subscription No.20240079516 which expires on 12/13/2026, is not for resale, is licensed for one-time use only, and may only be used in accordance with the AIA Contract Documents® Terms of Service. To report copyright violations, e-mail docinfo@aiacontracts.com.
**User Notes:** (699f1e5e7f2986a885297bea)

reasonable attorneys' fees and expenses recoverable under applicable law, but only to the extent they are caused by the negligent acts or omissions of the Construction Manager, its employees and its consultants in the performance of professional services under this Agreement. The Construction Manager's obligation to indemnify and hold the Owner and the Owner's officers and employees harmless does not include a duty to defend. The Construction Manager's duty to indemnify the Owner under this Section 8.1.3 shall be limited to the available proceeds of the insurance coverage required by this Agreement.

**§ 8.1.4** The Construction Manager and Owner waive consequential damages for claims, disputes, or other matters in question, arising out of or relating to this Agreement. This mutual waiver is applicable, without limitation, to all consequential damages due to either party's termination of this Agreement, except as specifically provided in Section 9.7.

**§ 8.2 Mediation**

**§ 8.2.1** Any claim, dispute or other matter in question arising out of or related to this Agreement shall be subject to mediation as a condition precedent to binding dispute resolution. If such matter relates to or is the subject of a lien arising out of the Construction Manager's services, the Construction Manager may proceed in accordance with applicable law to comply with the lien notice or filing deadlines prior to resolution of the matter by mediation or by binding dispute resolution.

**§ 8.2.2** The Owner and Construction Manager shall endeavor to resolve claims, disputes and other matters in question between them by mediation. A request for mediation shall be made in writing, delivered to the other party to this Agreement, and filed with the person or entity administering the mediation. The request may be made concurrently with the filing of a complaint or other appropriate demand for binding dispute resolution but, in such event, mediation shall proceed in advance of binding dispute resolution proceedings, which shall be stayed pending mediation for a period of 60 days from the date of filing, unless stayed for a longer period by agreement of the parties or court order.

**§ 8.2.3** The parties shall share the mediator's fee and any filing fees equally. The mediation shall be held in the place where the Project is located, unless another location is mutually agreed upon. Agreements reached in mediation shall be enforceable as settlement agreements in any court having jurisdiction thereof.

**§ 8.2.4** If the parties do not resolve a dispute through mediation pursuant to this Section 8.2, the method of binding dispute resolution shall be the following:
*(Check the appropriate box.)*

[ ] Arbitration pursuant to Section 8.3 of this Agreement

[ X ] Litigation in a court of competent jurisdiction

[ ] Other: *(Specify)*

If the Owner and Construction Manager do not select a method of binding dispute resolution, or do not subsequently agree in writing to a binding dispute resolution method other than litigation, the dispute will be resolved in a court of competent jurisdiction.

**§ 8.3 Reserved**

**§ 8.4** The provisions of this Article 8 shall survive the termination of this Agreement.

**ARTICLE 9 TERMINATION OR SUSPENSION**

**§ 9.1** If the Owner fails to make payments to the Construction Manager in accordance with this Agreement, such failure shall be considered substantial nonperformance and cause for termination or, at the Construction Manager's option, cause for suspension of performance of services under this Agreement. If the Construction Manager elects to suspend services, the Construction Manager shall give seven days' written notice to the Owner before suspending services. In the event of a suspension of services, the Construction Manager shall have no liability to the Owner for delay or damage caused the Owner because of such suspension of services. Before

AIA Document C132 – 2019. Copyright © 1973, 1980, 1992, 2009, and 2019. All rights reserved. "The American Institute of Architects," "American Institute of Architects," "AIA," the AIA Logo, and "AIA Contract Documents" are trademarks of The American Institute of Architects. This document was produced at 10:08:29 CST on 02/25/2026 under Subscription No.20240079516 which expires on 12/13/2026, is not for resale, is licensed for one-time use only, and may only be used in accordance with the AIA Contract Documents® Terms of Service. To report copyright violations, e-mail docinfo@aiacontracts.com.
**User Notes:** (699f1e5e7f2986a885297bea)

resuming services, the Owner shall pay the Construction Manager all sums due prior to suspension and any expenses incurred in the interruption and resumption of the Construction Manager's services. The Construction Manager's fees for the remaining services and the time schedules shall be equitably adjusted.

**§ 9.2** If the Owner suspends the Project, the Construction Manager shall be compensated for services performed prior to notice of such suspension. When the Project is resumed, the Construction Manager shall be compensated for expenses incurred in the interruption and resumption of the Construction Manager's services. The Construction Manager's fees for the remaining services and the time schedules shall be equitably adjusted.

**§ 9.3** If the Owner suspends the Project for more than 90 cumulative days for reasons other than the fault of the Construction Manager, the Construction Manager may terminate this Agreement by giving not less than seven days' written notice.

**§ 9.4** Either party may terminate this Agreement upon not less than seven days' written notice should the other party fail substantially to perform in accordance with the terms of this Agreement through no fault of the party initiating the termination.

**§ 9.5** The Owner may terminate this Agreement upon not less than seven days' written notice to the Construction Manager for the Owner's convenience and without cause.

**§ 9.6** If the Owner terminates this Agreement for its convenience pursuant to Section 9.5, or the Construction Manager terminates this Agreement pursuant to Section 9.3, the Owner shall compensate the Construction Manager for services performed prior to termination, Reimbursable Expenses incurred, and costs attributable to termination.

**§ 9.7** In addition to any amounts paid under Section 9.6, if the Owner terminates this Agreement for its convenience pursuant to Section 9.5, or the Construction Manager terminates this Agreement pursuant to Section 9.3, the Owner shall pay to the Construction Manager the following termination fee:
*(Set forth below the amount of any termination fee, or the method for determining any termination fee.)*

2.25% of the Cost of the Work not completed as of the date of termination.

**§ 9.8** Except as otherwise expressly provided herein, this Agreement shall terminate one year from the date of Substantial Completion.

## ARTICLE 10 MISCELLANEOUS PROVISIONS

**§ 10.1** This Agreement shall be governed by the law of the place where the Project is located, excluding that jurisdiction's choice of law rules. If the parties have selected arbitration as the method of binding dispute resolution, the Federal Arbitration Act shall govern Section 8.3.

**§ 10.2** Terms in this Agreement shall have the same meaning as those in AIA Document A232–2019, General Conditions of the Contract for Construction, except for purposes of this Agreement, the term "Work" shall include the work of all Contractors under the administration of the Construction Manager and the Architect.

**§ 10.3** The Owner and Construction Manager, respectively, bind themselves, their agents, successors, assigns, and legal representatives to this Agreement. Neither the Owner nor the Construction Manager shall assign this Agreement without the written consent of the other, except that the Owner may assign this Agreement to a lender providing financing for the Project if the lender agrees to assume the Owner's rights and obligations under this Agreement, including any payments due to the Construction Manager by the Owner prior to the assignment.

**§ 10.4** If the Owner requests the Construction Manager to execute certificates, the proposed language of such certificates shall be submitted to the Construction Manager for review at least 14 days prior to the requested dates of execution. If the Owner requests the Construction Manager to execute consents reasonably required to facilitate assignment to a lender, the Construction Manager shall execute all such consents that are consistent with this Agreement, provided the proposed consent is submitted to the Construction Manager for review at least 14 days prior to execution. The Construction Manager shall not be required to execute certificates or consents that would require knowledge, services, or responsibilities beyond the scope of this Agreement.

**§ 10.5** Nothing contained in this Agreement shall create a contractual relationship with, or a cause of action in

AIA Document C132 – 2019. Copyright © 1973, 1980, 1992, 2009, and 2019. All rights reserved. "The American Institute of Architects," "American Institute of Architects," "AIA," the AIA Logo, and "AIA Contract Documents" are trademarks of The American Institute of Architects. This document was produced at 10:08:29 CST on 02/25/2026 under Subscription No.20240079516 which expires on 12/13/2026, is not for resale, is licensed for one-time use only, and may only be used in accordance with the AIA Contract Documents® Terms of Service. To report copyright violations, e-mail docinfo@aiacontracts.com.
**User Notes:** (699f1e5e7f2986a885297bea)

favor of, a third party against either the Owner or Construction Manager.

**§ 10.6** Unless otherwise required in this Agreement, the Construction Manager shall have no responsibility for the discovery, presence, handling, removal or disposal of, or exposure of persons to, hazardous materials or toxic substances in any form at the Project site.

**§ 10.7** The Construction Manager shall have the right to include photographic or artistic representations of the design of the Project among the Construction Manager's promotional and professional materials. The Construction Manager shall provide professional credit for the Architect and the Contractors in the Construction Manager's promotional materials for the Project. The Construction Manager shall be given reasonable access to the completed Project to make such representations. However, the Construction Manager's materials shall not include the Owner's confidential or proprietary information if the Owner has previously advised the Construction Manager in writing of the specific information considered by the Owner to be confidential or proprietary. The Owner shall provide professional credit for the Construction Manager in the Owner's promotional materials for the Project. This Section 10.7 shall survive the termination of this Agreement unless the Owner terminates this Agreement for cause pursuant to Section 9.4.

**§ 10.8** If the Construction Manager or Owner receives information specifically designated as "confidential" or "business proprietary," the receiving party shall keep such information strictly confidential and shall not disclose it to any other person except as set forth in Section 10.8.1. This Section 10.8 shall survive the termination of this Agreement.

**§ 10.8.1** The receiving party may disclose "confidential" or "business proprietary" information after 7 days' notice to the other party, when required by law, arbitrator's order, or court order, including a subpoena or other form of compulsory legal process issued by a court or governmental entity, or to the extent such information is reasonably necessary for the receiving party to defend itself in any dispute. The receiving party may also disclose such information to its employees, consultants, or contractors in order to perform services or work solely and exclusively for the Project, provided those employees, consultants and contractors are subject to the restrictions on the disclosure and use of such information as set forth in this Section 10.8.

**§ 10.9** The invalidity of any provision of the Agreement shall not invalidate the Agreement or its remaining provisions. If it is determined that any provision of the Agreement violates any law, or is otherwise invalid or unenforceable, then that provision shall be revised to the extent necessary to make that provision legal and enforceable. In such case the Agreement shall be construed, to the fullest extent permitted by law, to give effect to the parties' intentions and purposes in executing the Agreement.

## ARTICLE 11 COMPENSATION

**§ 11.1** For the Construction Manager's Basic Services described under Article 3, the Owner shall compensate the Construction Manager as follows:

**§ 11.1.1** For Preconstruction Phase Services in Section 3.2:
*(Insert amount of, or basis for, compensation, including stipulated sums, multiples or percentages.)*

Lump Sum of $10,000.00 for thirteen (13) months of Preconstruction Phase Services from the date of this Agreement. Should the Preconstruction Phase exceed the above period, the Construction Manager's time shall be billed at the Construction Manager's usual hourly rates or the hourly rates set forth in Section 11.5.

**§ 11.1.2** For Construction Phase Services in Section 3.3:
*(Insert amount of, or basis for, compensation, including stipulated sums, multiples or percentages.)*

The Construction Manager shall be paid (i) a fee of 2.25% of the Cost of the Work defined in Article 6, (ii) the Construction Manager's costs for administrating and managing the Project at the hourly rates set forth in Section 11.5.1, (iii) the costs of Construction Manager's field labor for general conditions work at the hourly rates set forth in section 11.5.2, and (iv) any Reimbursable Expenses. Once the project has been sufficiently defined after the Preconstruction Phase, the Owner and Construction Manager shall execute an Amendment setting forth the Construction Manager's compensation for the Construct Phase of the Project as described herein. Any Construction
Phase services performed prior to execution of the Amendment shall be billed at the hourly rates set forth in Sections 11.5.1 and 11.5.2, plus Reimbursable Expenses.

AIA Document C132 – 2019. Copyright © 1973, 1980, 1992, 2009, and 2019. All rights reserved. "The American Institute of Architects," "American Institute of Architects," "AIA," the AIA Logo, and "AIA Contract Documents" are trademarks of The American Institute of Architects. This document was produced at 10:08:29 CST on 02/25/2026 under Subscription No.20240079516 which expires on 12/13/2026, is not for resale, is licensed for one-time use only, and may only be used in accordance with the AIA Contract Documents® Terms of Service. To report copyright violations, e-mail docinfo@aiacontracts.com.
**User Notes:** (699f1e5e7f2986a885297bea)

**§ 11.2** For the Construction Manager's Supplemental Services designated in Section 4.1.1, and for any Sustainability Services required pursuant to Section 4.1.3, the Owner shall compensate the Construction Manager as follows:
*(Insert amount of, or basis for, compensation. If necessary, list specific services to which particular methods of compensation apply.)*

At the hourly rates set forth in Sections 11.5.1 and 11.5.2, plus Reimbursable Expenses.

**§ 11.3** For Additional Services that may arise during the course of the Project, including those under Section 4.2, the Owner shall compensate the Construction Manager as follows:
*(Insert amount of, or basis for, compensation.)*

At the hourly rates set forth in Sections 11.5.1 and 11.5.2, plus Reimbursable Expenses.

**§ 11.4** Compensation for Supplemental and Additional Services of the Construction Manager's consultants when not included in Sections 11.2 or 11.3, shall be the amount invoiced to the Construction Manager plus two and one-quarter percent ( 2.25 %), or as follows:
*(Insert amount of, or basis for computing, Construction Manager's consultants' compensation for Supplemental or Additional Services.)*

**§ 11.5** The hourly billing rates for services of the Construction Manager and the Construction Manager's consultants are set forth below. The rates shall be adjusted in accordance with the Construction Manager's and Construction Manager's consultants' normal review practices.
*(If applicable, attach an exhibit of hourly billing rates or insert them below.)*

**§ 11.5.1** Hourly Rates for administrative and management personnel:

| Personnel Category | Rate Per Hour |
|---|---|
| Project Director/VP/DOO | $227.00 / hour |
| Sr. Project Manager/Construction Exec./Project Exec. | $191.00 / hour |
| Project Manager | $170.00 / hour |
| Assistant Project Manager | $144.00 / hour |
| Project Engineer/Field Engineer | $124.00 / hour |
| Director of Preconstruction | $191.00 / hour |
| Preconstruction Manager | $170.00 / hour |
| Estimator | $165.00 / hour |
| Assistant Estimator | $122.00 / hour |
| Project Intern | $67.00 / hour |
| Safety Director | $177.00 / hour |
| Safety Engineer/Safety Manager | $161.00 / hour |
| Quality Director | $206.00 / hour |
| Quality Manager | $185.00 / hour |
| MEP Specialist | $178.00 / hour |
| VDC/BIM | $148.00 / hour |
| General Superintendent | $185.00 / hour |
| Field Superintendent | $167.00 / hour |
| Assistant Superintendent | $144.00 / hour |
| Project Coordinator/Accountant/Marketing | $84.00 / hour |
| Computer/IT | $108.00 / hour |
| Yard Delivery | $140.00 / hour |

The rates set forth above shall be in effect through December 31, 2027. Thereafter the rates shall be increased by three percent (3.0%) per year as of January 1 of each subsequent year.

AIA Document C132 – 2019. Copyright © 1973, 1980, 1992, 2009, and 2019. All rights reserved. "The American Institute of Architects," "American Institute of Architects," "AIA," the AIA Logo, and "AIA Contract Documents" are trademarks of The American Institute of Architects. This document was produced at 10:08:29 CST on 02/25/2026 under Subscription No.20240079516 which expires on 12/13/2026, is not for resale, is licensed for one-time use only, and may only be used in accordance with the AIA Contract Documents® Terms of Service. To report copyright violations, e-mail docinfo@aiacontracts.com.
**User Notes:** (699f1e5e7f2986a885297bea)

**§ 11.5.2** Regular Hourly Rates for field labor personnel for any miscellaneous general requirements or general conditions-type work:

| Personnel Category | Rate Per Hour |
|---|---|
| Carpenter - Journeyman | $114.10 / hour |
| Carpenter - Foreman | $119.57 / hour |
| Carpenter – General Foreman | $124.68 / hour |
| Laborer - Journeyman | $104.39 / hour |
| Laborer - Foreman | $104.76 / hour |
| Operator – G1 | $118.55 / hour |
| Operator – G2 | $117.95 / hour |
| Operator – G3 | $115.53 / hour |
| Operator – G4 | $114.97 / hour |
| Operator – G5 | $111.67 / hour |
| Operator – G6 | $109.10 / hour |
| Operator – G7 | $107.17 / hour |
| Operator – G8 | $103.72 / hour |

The rates set forth above shall be increased in accordance with the terms of any applicable collective bargaining agreement.

The rates for any miscellaneous tool or equipment rentals shall be at the rates set forth in Exhibit A.

**§ 11.6 Compensation for Reimbursable Expenses**

**§ 11.6.1** Reimbursable Expenses are in addition to compensation for Basic, Supplemental, and Additional Services and include expenses incurred by the Construction Manager and the Construction Manager's consultants directly related to the Project, as follows:

**.1** Transportation and authorized out-of-town travel and subsistence;
**.2** Long distance services, dedicated data and communication services, teleconferences, Project web sites, and extranets;
**.3** Permitting and other fees required by authorities having jurisdiction over the Project;
**.4** Printing, reproductions, plots, and standard form documents;
**.5** Postage, handling, and delivery;
**.6** Expense of overtime work requiring higher than regular rates, if authorized in advance by the Owner;
**.7** Professional photography, and presentation materials requested by the Owner;
**.8** All taxes levied on professional services and on reimbursable expenses;
**.9** Site office expenses;
**.10** General conditions expenditures;
**.11** General liability, professional liability, and umbrella liability insurance at a rate of 1.08% of the cost of the Construction Manager's Preconstruction and Construction Phase services; and
**.12** Other similar Project-related expenditures.

**§ 11.6.2** For Reimbursable Expenses the compensation shall be the expenses incurred by the Construction Manager and the Construction Manager's consultants plus two and one-quarter percent ( 2.25 %) of the expenses incurred.

**§ 11.7 Construction Manager's Insurance.** If the types and limits of coverage required in Section 2.8 are in addition to the types and limits the Construction Manager normally maintains, the Owner shall pay the Construction Manager for the additional costs incurred by the Construction Manager for the additional coverages as set forth below.
*(Insert the additional coverages the Construction Manager is required to obtain in order to satisfy the requirements set forth in Section 2.8, and for which the Owner shall reimburse the Construction Manager.)*

AIA Document C132 – 2019. Copyright © 1973, 1980, 1992, 2009, and 2019. All rights reserved. "The American Institute of Architects," "American Institute of Architects," "AIA," the AIA Logo, and "AIA Contract Documents" are trademarks of The American Institute of Architects. This document was produced at 10:08:29 CST on 02/25/2026 under Subscription No.20240079516 which expires on 12/13/2026, is not for resale, is licensed for one-time use only, and may only be used in accordance with the AIA Contract Documents® Terms of Service. To report copyright violations, e-mail docinfo@aiacontracts.com.
**User Notes:** (699f1e5e7f2986a885297bea)

**§ 11.8 Payments to the Construction Manager**

**§ 11.8.1 Initial Payment**

**§ 11.8.1.1** An initial payment of zero dollars ($ 0.00 ) shall be made upon execution of this Agreement and is the minimum payment under this Agreement. It shall be credited to the Owner's account in the final invoice.

**§ 11.8.2 Progress Payments**

**§ 11.8.2.1** Unless otherwise agreed, payments for services shall be made monthly in proportion to services performed. Payments are due and payable upon presentation of the Construction Manager's invoice. Amounts unpaid thirty (30) days after the invoice date shall bear interest at the rate entered below, or in the absence thereof at the legal rate prevailing from time to time at the principal place of business of the Construction Manager.
*(Insert rate of monthly or annual interest agreed upon.)*

The rate of interest required by applicable law, or if no such rate is required by applicable law, invoices due and unpaid under this Agreement shall bear interest from the date payment is due at an annual rate of interest of two percent (2%) over the reference rate of interest from time to time announced by U.S. Bank Minneapolis, NA as its reference rate, with each change in interest rate hereunder to become effective on the date the corresponding change in such reference rate as announced by U.S. Bank Minneapolis, NA becomes effective.

**§ 11.8.2.2** The Owner shall not withhold amounts from the Construction Manager's compensation to impose a penalty or liquidated damages on the Construction Manager, or to offset sums requested by or paid to Contractors for the cost of changes in the Work, unless the Construction Manager agrees or has been found liable for the amounts in a binding dispute resolution proceeding.

**§ 11.8.2.3** Records of Reimbursable Expenses, expenses pertaining to Supplemental and Additional Services, and services performed on the basis of hourly rates shall be available to the Owner at mutually convenient times.

## ARTICLE 12 SPECIAL TERMS AND CONDITIONS

Special terms and conditions that modify this Agreement are as follows:
*(Include other terms and conditions applicable to this Agreement.)*

**§ 12.1 DOCUSIGN ELECTRONIC SIGNING SYSTEM**. The Construction Manager has an agreement with DocuSign, Inc. ("DocuSign") with respect to the DocuSign electronic signing system (the "DocuSign System"). The DocuSign System may be used to facilitate the administration and execution of the Owner's Construction Contracts with the Multiple Prime Contractors, as well as various other Contract Documents requiring signatures. Should the Owner elect to have the Construction Manager use the DocuSign System with respect to any portion of the Project, the Owner acknowledges and agrees that (i) the Owner conducted its own independent investigation and evaluation as to all legal and other considerations related to its decision to use the DocuSign System on the Project, (ii) the Owner did not rely on any advice, recommendations or representations of the Construction Manager in making the Owner's independent determination to use the DocuSign System on the Project, (iii) the Construction Manager and DocuSign are not affiliated with each other and the Construction Manager does not warrant or guarantee any portion of the DocuSign System, (iv) the Construction Manager does not warrant or guarantee that the DocuSign system complies with or satisfies any legal requirements applicable to its use on the Project, and (v) to the fullest extent permitted by law, the Owner waives, and shall hold harmless and indemnify the Construction Manager from and against, all claims, causes of action, costs, expenses and damages (including reasonable attorney's fees) arising out of or resulting from the use of the DocuSign System on the Project.

## ARTICLE 13 SCOPE OF THE AGREEMENT

**§ 13.1** This Agreement represents the entire and integrated agreement between the Owner and the Construction Manager and supersedes all prior negotiations, representations or agreements, either written or oral. This Agreement may be amended only by written instrument signed by both the Owner and Construction Manager.

**§ 13.2** This Agreement is comprised of the following documents identified below:

**.1** AIA Document C132™–2019, Standard Form Agreement Between Owner and Construction Manager as Adviser

**.2** Building Information Modeling Exhibit, if completed:

AIA Document C132 – 2019. Copyright © 1973, 1980, 1992, 2009, and 2019. All rights reserved. "The American Institute of Architects," "American Institute of Architects," "AIA," the AIA Logo, and "AIA Contract Documents" are trademarks of The American Institute of Architects. This document was produced at 10:08:29 CST on 02/25/2026 under Subscription No.20240079516 which expires on 12/13/2026, is not for resale, is licensed for one-time use only, and may only be used in accordance with the AIA Contract Documents® Terms of Service. To report copyright violations, e-mail docinfo@aiacontracts.com.
**User Notes:** (699f1e5e7f2986a885297bea)

**.3** Exhibits:
*(Check the appropriate box for any exhibits incorporated into this Agreement.)*

[ ] AIA Document E235™–2019, Sustainable Projects Exhibit, Construction Manager as Adviser Edition, dated as indicated below:
*(Insert the date of the E235-2019 incorporated into this agreement.)*

[ ] Other Exhibits incorporated into this Agreement:
*(Clearly identify any other exhibits incorporated into this Agreement, including any exhibits identified in Section 4.1.2.)*

**.4** Other documents:
*(List other documents, if any, forming part of the Agreement.)*

Exhibit A: Tool and Equipment Rental Rates

This Agreement is entered into as of the day and year first written above. This Agreement may be executed in any number of counterparts, each of which when so executed and delivered shall be deemed an original and all of which counterparts, taken together, shall constitute one and the same instrument. Delivery of an executed counterpart of a signature page of this document by facsimile, pdf or other generally accepted electronic means (e.g., DocuSign) shall be effective as delivery of a manually executed counterpart of this document.

| **City of Cottage Grove** | **Kraus-Anderson® Construction Company** |
|---|---|
| **OWNER** *(Signature)* | **CONSTRUCTION MANAGER** *(Signature)* |
| BY: . | BY: . |
| *(Printed name and title)* | *(Printed name and title)* |
| **OWNER** *(Signature)* | **CONSTRUCTION MANAGER** *(Signature)* |
| BY: . | BY: . |
| *(Printed name and title)* | *(Printed name and title)* |

AIA Document C132 – 2019. Copyright © 1973, 1980, 1992, 2009, and 2019. All rights reserved. "The American Institute of Architects," "American Institute of Architects," "AIA," the AIA Logo, and "AIA Contract Documents" are trademarks of The American Institute of Architects. This document was produced at 10:08:29 CST on 02/25/2026 under Subscription No.20240079516 which expires on 12/13/2026, is not for resale, is licensed for one-time use only, and may only be used in accordance with the AIA Contract Documents® Terms of Service. To report copyright violations, e-mail docinfo@aiacontracts.com.
**User Notes:** (699f1e5e7f2986a885297bea)

# *Additions and Deletions Report for*
*AIA® Document C132® – 2019*

This Additions and Deletions Report, as defined on page 1 of the associated document, reproduces below all text the author has added to the standard form AIA document in order to complete it, as well as any text the author may have added to or deleted from the original AIA text. Added text is shown underlined. Deleted text is indicated with a horizontal line through the original AIA text.

Note: This Additions and Deletions Report is provided for information purposes only and is not incorporated into or constitute any part of the associated AIA document. This Additions and Deletions Report and its associated document were generated simultaneously by AIA software at 10:08:29 CST on 02/25/2026.

**Changes to original AIA text**

**PAGE 1**

**PAGE 2**

**PAGE 3**

**§ 1.1.7.1** If the Owner identifies a Sustainable Objective, the Owner and Construction Manager shall endeavor to define the terms, conditions and services related to the Owner's Sustainable Objective and may complete and incorporate AIA Document E235™–2019, Sustainable Projects Exhibit, Construction Manager as Adviser Edition, into this Agreement ~~to define the terms, conditions and services related to the Owner's Sustainable Objective~~. If E235–2019 is incorporated into this Agreement, the Owner and Construction Manager shall incorporate the completed E235–2019 into the agreements with the consultants and contractors performing services or Work in any way associated with the Sustainable Objective.

**PAGE 4**

**PAGE 5**

Additions and Deletions Report for AIA Document C132 – 2019. Copyright © 1973, 1980, 1992, 2009, and 2019. All rights reserved. "The American Institute of Architects," "American Institute of Architects," "AIA," the AIA Logo, and "AIA Contract Documents" are trademarks of The American Institute of Architects. This document was produced at 10:08:29 CST on 02/25/2026 under Subscription No.20240079516 which expires on 12/13/2026, is not for resale, is licensed for one-time use only, and may only be used in accordance with the AIA Contract Documents® Terms of Service. To report copyright violations, e-mail docinfo@aiacontracts.com.
**User Notes:** (699f1e5e7f2986a885297bea)

**§ 1.2** The Owner and Construction Manager may rely on the Initial Information. Both parties, however, recognize that the Initial Information may materially change and, in that event, the Owner and the Construction Manager shall, by appropriate written agreement appropriately adjust the Construction Manager's services, schedule for the Construction Manager's services, and the Construction Manager's compensation. The Owner shall adjust the Owner's budget for the Cost of the Work and the Owner's anticipated design and construction milestones, as necessary, to accommodate material changes in the Initial Information.

**§ 1.3** The ~~parties~~Construction Manager shall ~~agree upon written~~ assist the Owner and Architect in establishing protocols governing the transmission and use of, and reliance on, Instruments of Service or any other information or documentation in digital form.

**§ 1.3.1** Any use of, or reliance on, all or a portion of a building information model without agreement to ~~written~~ protocols governing the use of, and reliance on, the information contained in the model shall be at the using or relying party's sole risk and without liability to the other party and its contractors or consultants, the authors of, or contributors to, the building information model, and each of their agents and employees.

**PAGE 6**

**§ 2.8.1** Commercial General Liability with policy limits of not less than ~~($~~ One Million and 00/100 Dollars ($1,000,000.00) for each occurrence and ~~($~~ Two Million and 00/100 Dollars ($2,000,000.00) in the aggregate for bodily injury and property damage.

**§ 2.8.2** Automobile Liability covering vehicles owned, and non-owned vehicles used, by the Construction Manager with policy limits of not less than ~~($~~ One Million and 00/100 Dollars ($1,000,000.00) per accident for bodily injury, death of any person, and property damage arising out of the ownership, maintenance and use of those motor vehicles, along with any other statutorily required automobile coverage.

**§ 2.8.4** Workers' Compensation at statutory limits and Employers Liability with policy limits not less than ~~($~~ Five Hundred Thousand and 00/100 Dollars ($500,000.00) each accident, ~~($~~ Five Hundred Thousand and 00/100 Dollars ($500,000.00) each employee, and ~~($~~ Five Hundred Thousand and 00/100 Dollars ($500,000.00) policy limit.

**PAGE 7**

**§ 2.8.5** Professional Liability covering negligent acts, errors and omissions in the performance of professional services with policy limits of not less than ~~($~~ Five Million and 00/100 Dollars ($5,000,000.00) per claim and ~~($~~ Five Million and 00/100 Dollars ($5,000,000.00) in the aggregate.

**§ 2.8.6 ~~Additional Insured Obligations.~~** ~~To the fullest extent permitted by law, the Construction Manager shall cause the primary and excess or umbrella policies for Commercial General Liability and Automobile Liability to include the Owner as an additional insured for claims caused in whole or in part by the Construction Manager's negligent acts or omissions. The additional insured coverage shall be primary and non-contributory to any of the Owner's insurance policies and shall apply to both ongoing and completed operations~~**Reserved.**

**§ 2.9** The Construction Manager shall assist the Owner, Architect, and other Project participants in establishing ~~written~~ protocols for the development, use, transmission, reliance, and exchange of digital data, including building information models for the Project.

**§ 2.10** ~~A~~If a centralized electronic document management system will be used on the Project, ~~and~~ the Construction

Additions and Deletions Report for AIA Document C132 – 2019. Copyright © 1973, 1980, 1992, 2009, and 2019. All rights reserved. "The American Institute of Architects," "American Institute of Architects," "AIA," the AIA Logo, and "AIA Contract Documents" are trademarks of The American Institute of Architects. This document was produced at 10:08:29 CST on 02/25/2026 under Subscription No.20240079516 which expires on 12/13/2026, is not for resale, is licensed for one-time use only, and may only be used in accordance with the AIA Contract Documents® Terms of Service. To report copyright violations, e-mail docinfo@aiacontracts.com.
**User Notes:** (699f1e5e7f2986a885297bea)

Manager shall be responsible for managing and maintaining the centralized electronic document management system. ~~The centralized electronic document management system shall include the following:~~

~~*(List any items that are to be included in the centralized electronic management system.)*~~

**PAGE 8**

**§ 3.2.8** The Construction Manager shall review recommendations for systems, materials, or equipment for the impact upon cost, schedule, sequencing, constructability, and coordination among the Contractors. The Construction Manager shall discuss its findings with the Owner and the Architect, and ~~coordinate~~assist the Owner and Architect with resolution, as necessary, of any such impacts.

**PAGE 9**

**§ 3.2.22** The Construction Manager, with the assistance of the Architect, shall assist the Owner in preparing Contracts for Construction. The Construction Manager shall advise the Owner on the acceptability of Subcontractors and material suppliers proposed by Contractors. The Owner will review and approve contracts consistent with the Owner's approval process.

**§ 3.2.24** If the Owner identified a Sustainable Objective in Article 1, the Construction Manager shall fulfill its Preconstruction Phase responsibilities ~~as required in AIA Document E235™–2019, Sustainable Projects Exhibit, Construction Manager as Adviser Edition, attached to this Agreement~~per the agreed-upon terms, conditions and services related to the Owner's Sustainable Objective.

**PAGE 11**

**§ 3.3.15** The Construction Manager shall advise and consult with the Owner and Architect during the performance of its Construction Phase Services. The Construction Manager shall have authority to act on behalf of the Owner only to the extent provided in this Agreement. The Construction Manager shall not have control over, charge of, or responsibility for the construction means, methods, techniques, sequences or procedures, or for safety precautions and programs in connection with the Work of each of the Contractors, since these are solely the Contractor's rights and responsibilities under the Contract Documents. The Construction Manager shall not be responsible for a Contractor's failure to perform the Work in accordance with the requirements of the Contract Documents. The Construction Manager shall be responsible to the Owner for the Construction Manager's negligent acts or omissions, but shall not have control over or charge of, and shall not be responsible for, acts or omissions of the Contractors, Subcontractors, or their agents or employees, or any other persons or entities performing portions of the Work.

**§ 3.3.16** The Construction Manager shall transmit to the Architect requests for interpretations, and requests for information of the meaning and intent of the Drawings and Specifications~~, and provide its written recommendation~~. The Construction Manager shall assist in the resolution of questions that may arise.

**PAGE 12**

**§ 3.3.20.1** If professional design services or certifications by a design professional related to systems, materials, or equipment are specifically required of the Contractors by the Contract Documents, the Construction Manager shall review those submittals for sequencing, constructability, and coordination impacts on the other Contractors. The Construction Manager shall discuss its findings with the Owner and the Architect, and ~~coordinate~~assist the Owner and the Architect with resolution, as necessary, of any such impacts.

**PAGE 13**

**§ 3.3.29** Duties, responsibilities and limitations of authority of the Construction Manager as set forth in the Contract Documents shall not be restricted, modified or extended without written consent of the Owner~~,~~ and Construction Manager~~, Architect, and Contractors~~. Consent shall not be unreasonably withheld.

Additions and Deletions Report for AIA Document C132 – 2019. Copyright © 1973, 1980, 1992, 2009, and 2019. All rights reserved. "The American Institute of Architects," "American Institute of Architects," "AIA," the AIA Logo, and "AIA Contract Documents" are trademarks of The American Institute of Architects. This document was produced at 10:08:29 CST on 02/25/2026 under Subscription No.20240079516 which expires on 12/13/2026, is not for resale, is licensed for one-time use only, and may only be used in accordance with the AIA Contract Documents® Terms of Service. To report copyright violations, e-mail docinfo@aiacontracts.com.
**User Notes:** (699f1e5e7f2986a885297bea)

**PAGE 14**

| | | |
|---|---|---|
| **§ 4.1.1.1** | Measured drawings | Owner |
| **§ 4.1.1.2** | Tenant-related services | Owner, if required |
| **§ 4.1.1.3** | Commissioning | Owner, if required |
| **§ 4.1.1.4** | Development of a commissioning plan | Owner, if required |
| **§ 4.1.1.5** | Sustainable Project Services pursuant to Section 4.1.3 | N/A |
| **§ 4.1.1.6** | Furniture, furnishings and equipment delivery, and installation ——coordination | Construction Manager, if required |
| **§ 4.1.1.7** | Furniture, furnishings and equipment procurement assistance | N/A |
| **§ 4.1.1.8** | Assistance with site selection | N/A |
| **§ 4.1.1.9** | Assistance with selection of the Architect | Owner |
| **§ 4.1.1.10** | Furnish land survey | Owner, if required |
| **§ 4.1.1.11** | Furnish geotechnical engineering services | Owner |
| **§ 4.1.1.12** | Provide insurance advice | Owner, if required |
| **§ 4.1.1.13** | Provide supplemental Project risk analysis and mitigation —— strategies | Owner, if required |
| **§ 4.1.1.14** | Stakeholder relationships management | N/A |
| **§ 4.1.1.15** | Owner moving coordination | N/A |
| **§ 4.1.1.16** | Coordination of Owner's Separate Contractors | Construction Manager, if required |
| **§ 4.1.1.17** | Other Supplemental Services | N/A |
| | | |

**§ 4.1.3** If the Owner identified a Sustainable Objective in Article 1, the Construction Manager shall provide, as a Supplemental Service, the Sustainability Services ~~required in AIA Document E235™–2019, Sustainable Projects Exhibit, Construction Manager as Adviser Edition, attached to this Agreement~~per the agreed-upon terms, conditions and services related to the Owner's Sustainable Objective. The Owner shall compensate the Construction Manager as provided in Section 11.2.

**§ 4.2.1** The Construction Manager may provide Additional Services after execution of this Agreement, without invalidating this Agreement. Except ~~for~~to the extent services are required due to the fault of the Construction Manager, any Additional Services provided in accordance with this Section 4.2 shall entitle the Construction Manager to compensation pursuant to Section 11.3.

**PAGE 15**

**§ 4.2.5** If the services covered by this Agreement have not been completed within ~~(~~ seventeen ( 17 ) months of the date of this Agreement, through no fault of the Construction Manager, extension of the Construction Manager's services beyond that time shall be compensated as Additional Services.

**PAGE 16**

**§ 5.6** Unless otherwise required by this Agreement to be provided by the Construction Manager, the Owner shall furnish surveys to describe physical characteristics, legal limitations and utility locations for the site of the Project, and a written legal description of the site. The surveys and legal information shall include, as applicable, grades and lines of streets, alleys, pavements and adjoining property and structures; designated wetlands; adjacent drainage; rights-of-way, restrictions, easements, encroachments, zoning, deed restrictions, boundaries, and contours of the site; locations, dimensions, and other necessary data with respect to existing buildings, other improvements and trees; and information concerning available utility services and lines, both public and private, above and below grade, including inverts and depths. All the information on the survey shall be referenced to a Project benchmark.

**§ 5.7** Unless otherwise required by this Agreement to be provided by the Construction Manager, the Owner shall

Additions and Deletions Report for AIA Document C132 – 2019. Copyright © 1973, 1980, 1992, 2009, and 2019. All rights reserved. "The American Institute of Architects," "American Institute of Architects," "AIA," the AIA Logo, and "AIA Contract Documents" are trademarks of The American Institute of Architects. This document was produced at 10:08:29 CST on 02/25/2026 under Subscription No.20240079516 which expires on 12/13/2026, is not for resale, is licensed for one-time use only, and may only be used in accordance with the AIA Contract Documents® Terms of Service. To report copyright violations, e-mail docinfo@aiacontracts.com.
**User Notes:** (699f1e5e7f2986a885297bea)

furnish services of geotechnical engineers, which may include test borings, test pits, determinations of soil bearing values, percolation tests, evaluations of hazardous materials, seismic evaluation, ground corrosion tests and resistivity tests, including necessary operations for anticipating subsoil conditions, with written reports and appropriate recommendations.

**PAGE 17**

**§ 5.19** The services, information and reports provided by the Owner pursuant to this Article 5 shall be provided at the Owner's expense, and the Construction Manager shall be entitled to rely upon the accuracy and completeness thereof.

**PAGE 18**

**§ 8.2.2** The Owner and Construction Manager shall endeavor to resolve claims, disputes and other matters in question between them by mediation~~, which, unless the parties mutually agree otherwise, shall be administered by the American Arbitration Association in accordance with its Construction Industry Mediation Procedures in effect on the date of this Agreement~~. A request for mediation shall be made in writing, delivered to the other party to this Agreement, and filed with the person or entity administering the mediation. The request may be made concurrently with the filing of a complaint or other appropriate demand for binding dispute resolution but, in such event, mediation shall proceed in advance of binding dispute resolution proceedings, which shall be stayed pending mediation for a period of 60 days from the date of filing, unless stayed for a longer period by agreement of the parties or court order. ~~If an arbitration proceeding is stayed pursuant to this section, the parties may nonetheless proceed to the selection of the arbitrator(s) and agree upon a schedule for later proceedings.~~

**PAGE 19**

**§ 8.3 ~~Arbitration~~Reserved**

~~**§ 8.3.1** If the parties have selected arbitration as the method for binding dispute resolution in this Agreement, any claim, dispute or other matter in question arising out of or related to this Agreement subject to, but not resolved by, mediation shall be subject to arbitration, which, unless the parties mutually agree otherwise, shall be administered by the American Arbitration Association in accordance with its Construction Industry Arbitration Rules in effect on the date of this Agreement. A demand for arbitration shall be made in writing, delivered to the other party to this Agreement, and filed with the person or entity administering the arbitration.~~

~~**§ 8.3.1.1** A demand for arbitration shall be made no earlier than concurrently with the filing of a request for mediation, but in no event shall it be made after the date when the institution of legal or equitable proceedings based on the claim, dispute or other matter in question would be barred by the applicable statute of limitations. For statute of limitations purposes, receipt of a written demand for arbitration by the person or entity administering the arbitration shall constitute the institution of legal or equitable proceedings based on the claim, dispute or other matter in question.~~

~~**§ 8.3.2** The foregoing agreement to arbitrate, and other agreements to arbitrate with an additional person or entity duly consented to by parties to this Agreement, shall be specifically enforceable in accordance with applicable law in any court having jurisdiction thereof.~~

~~**§ 8.3.3** The award rendered by the arbitrator(s) shall be final, and judgment may be entered upon it in accordance with applicable law in any court having jurisdiction thereof.~~

~~**§ 8.3.4 Consolidation or Joinder**~~

~~**§ 8.3.4.1** Either party, at its sole discretion, may consolidate an arbitration conducted under this Agreement with any other arbitration to which it is a party provided that (1) the arbitration agreement governing the other arbitration permits consolidation; (2) the arbitrations to be consolidated substantially involve common questions of law or fact; and (3) the arbitrations employ materially similar procedural rules and methods for selecting arbitrator(s).~~

~~**§ 8.3.4.2** Either party, at its sole discretion, may include by joinder persons or entities substantially involved in a common question of law or fact whose presence is required if complete relief is to be accorded in arbitration, provided that the party sought to be joined consents in writing to such joinder. Consent to arbitration involving an additional person or entity shall not constitute consent to arbitration of any claim, dispute or other matter in question not described in the written consent.~~

Additions and Deletions Report for AIA Document C132 – 2019. Copyright © 1973, 1980, 1992, 2009, and 2019. All rights reserved. "The American Institute of Architects," "American Institute of Architects," "AIA," the AIA Logo, and "AIA Contract Documents" are trademarks of The American Institute of Architects. This document was produced at 10:08:29 CST on 02/25/2026 under Subscription No.20240079516 which expires on 12/13/2026, is not for resale, is licensed for one-time use only, and may only be used in accordance with the AIA Contract Documents® Terms of Service. To report copyright violations, e-mail docinfo@aiacontracts.com.
**User Notes:** (699f1e5e7f2986a885297bea)

~~**§ 8.3.4.3** The Owner and Construction Manager grant to any person or entity made a party to an arbitration conducted under this Section 8.3, whether by joinder or consolidation, the same rights of joinder and consolidation as the Owner and Construction Manager under this Agreement.~~

**PAGE 20**

**§ 9.6** If the Owner terminates this Agreement for its convenience pursuant to Section 9.5, or the Construction Manager terminates this Agreement pursuant to Section 9.3, the Owner shall compensate the Construction Manager for services performed prior to termination, Reimbursable Expenses incurred, and costs attributable to termination~~, including the costs attributable to the Construction Manager's termination of consultant agreements~~.

2.25% of the Cost of the Work not completed as of the date of termination.

**PAGE 21**

Lump Sum of $10,000.00 for thirteen (13) months of Preconstruction Phase Services from the date of this Agreement. Should the Preconstruction Phase exceed the above period, the Construction Manager's time shall be billed at the Construction Manager's usual hourly rates or the hourly rates set forth in Section 11.5.

The Construction Manager shall be paid (i) a fee of 2.25% of the Cost of the Work defined in Article 6, (ii) the

Construction Manager's costs for administrating and managing the Project at the hourly rates set forth in Section

11.5.1, (iii) the costs of Construction Manager's field labor for general conditions work at the hourly rates set forth in section 11.5.2, and (iv) any Reimbursable Expenses. Once the project has been sufficiently defined after the

Preconstruction Phase, the Owner and Construction Manager shall execute an Amendment setting forth the

Construction Manager's compensation for the Construct Phase of the Project as described herein. Any Construction

Phase services performed prior to execution of the Amendment shall be billed at the hourly rates set forth in Sections 11.5.1 and 11.5.2, plus Reimbursable Expenses.

At the hourly rates set forth in Sections 11.5.1 and 11.5.2, plus Reimbursable Expenses.

At the hourly rates set forth in Sections 11.5.1 and 11.5.2, plus Reimbursable Expenses.

**PAGE 22**

**§ 11.5.1** Hourly Rates for administrative and management personnel:

| **Personnel Category** | **Rate Per Hour** |
|---|---|
| Project Director/VP/DOO | $227.00 / hour |
| Sr. Project Manager/Construction Exec./Project Exec. | $191.00 / hour |
| Project Manager | $170.00 / hour |
| Assistant Project Manager | $144.00 / hour |
| Project Engineer/Field Engineer | $124.00 / hour |

Additions and Deletions Report for AIA Document C132 – 2019. Copyright © 1973, 1980, 1992, 2009, and 2019. All rights reserved. "The American Institute of Architects," "American Institute of Architects," "AIA," the AIA Logo, and "AIA Contract Documents" are trademarks of The American Institute of Architects. This document was produced at 10:08:29 CST on 02/25/2026 under Subscription No.20240079516 which expires on 12/13/2026, is not for resale, is licensed for one-time use only, and may only be used in accordance with the AIA Contract Documents® Terms of Service. To report copyright violations, e-mail docinfo@aiacontracts.com.
**User Notes:** (699f1e5e7f2986a885297bea)

| | |
|---|---|
| Director of Preconstruction | $191.00 / hour |
| Preconstruction Manager | $170.00 / hour |
| Estimator | $165.00 / hour |
| Assistant Estimator | $122.00 / hour |
| Project Intern | $67.00 / hour |
| Safety Director | $177.00 / hour |
| Safety Engineer/Safety Manager | $161.00 / hour |
| Quality Director | $206.00 / hour |
| Quality Manager | $185.00 / hour |
| MEP Specialist | $178.00 / hour |
| VDC/BIM | $148.00 / hour |
| General Superintendent | $185.00 / hour |
| Field Superintendent | $167.00 / hour |
| Assistant Superintendent | $144.00 / hour |
| Project Coordinator/Accountant/Marketing | $84.00 / hour |
| Computer/IT | $108.00 / hour |
| Yard Delivery | $140.00 / hour |

The rates set forth above shall be in effect through December 31, 2027. Thereafter the rates shall be increased by three percent (3.0%) per year as of January 1 of each subsequent year.

**§ 11.5.2** Regular Hourly Rates for field labor personnel for any miscellaneous general requirements or general conditions-type work:

| **Personnel Category** | **Rate Per Hour** |
|---|---|
| Carpenter - Journeyman | $114.10 / hour |
| Carpenter - Foreman | $119.57 / hour |
| Carpenter – General Foreman | $124.68 / hour |
| Laborer - Journeyman | $104.39 / hour |
| Laborer - Foreman | $104.76 / hour |
| Operator – G1 | $118.55 / hour |
| Operator – G2 | $117.95 / hour |
| Operator – G3 | $115.53 / hour |

Additions and Deletions Report for AIA Document C132 – 2019. Copyright © 1973, 1980, 1992, 2009, and 2019. All rights reserved. "The American Institute of Architects," "American Institute of Architects," "AIA," the AIA Logo, and "AIA Contract Documents" are trademarks of The American Institute of Architects. This document was produced at 10:08:29 CST on 02/25/2026 under Subscription No.20240079516 which expires on 12/13/2026, is not for resale, is licensed for one-time use only, and may only be used in accordance with the AIA Contract Documents® Terms of Service. To report copyright violations, e-mail docinfo@aiacontracts.com.
**User Notes:** (699f1e5e7f2986a885297bea)

| | |
|---|---|
| Operator – G4 | $114.97 / hour |
| Operator – G5 | $111.67 / hour |
| Operator – G6 | $109.10 / hour |
| Operator – G7 | $107.17 / hour |
| Operator – G8 | $103.72 / hour |

**PAGE 23**

The rates set forth above shall be increased in accordance with the terms of any applicable collective bargaining agreement.

The rates for any miscellaneous tool or equipment rentals shall be at the rates set forth in Exhibit A.

~~**Employee or Category** **Rate ($0.00)**~~

**.8** ~~If required by the Owner, and with the Owner's prior written approval, the Construction Manager's consultants' expenses of professional liability insurance dedicated exclusively to this Project, or the expense of additional insurance coverage or limits in excess of that normally maintained by the Construction Manager's consultants;~~

**.9** ~~All taxes levied on professional services and on reimbursable expenses;~~

**.10** ~~Site office expenses; and~~

**.11** ~~All~~ taxes levied on professional services and on reimbursable expenses;

**.9** Site office expenses;

**.10** General conditions expenditures;

**.11** General liability, professional liability, and umbrella liability insurance at a rate of 1.08% of the cost of the Construction Manager's Preconstruction and Construction Phase services; and

**.12** Other similar Project-related expenditures.

**§ 11.8.1.1** An initial payment of ~~(~~$ ~~-~~zero dollars ($ 0.00 ) shall be made upon execution of this Agreement and is the minimum payment under this Agreement. It shall be credited to the Owner's account in the final invoice.

**§ 11.8.2.1** Unless otherwise agreed, payments for services shall be made monthly in proportion to services performed. Payments are due and payable upon presentation of the Construction Manager's invoice. Amounts unpaid ~~(~~ thirty (30) days after the invoice date shall bear interest at the rate entered below, or in the absence thereof at the legal rate prevailing from time to time at the principal place of business of the Construction Manager.

~~%~~ The rate of interest required by applicable law, or if no such rate is required by applicable law, invoices due and unpaid under this Agreement shall bear interest from the date payment is due at an annual rate of interest of two percent (2%) over the reference rate of interest from time to time announced by U.S. Bank Minneapolis, NA as its reference rate, with each change in interest rate hereunder to become effective on the date the corresponding change in such reference rate as announced by U.S. Bank Minneapolis, NA becomes effective.

**PAGE 24**

**§ 12.1 DOCUSIGN ELECTRONIC SIGNING SYSTEM**. The Construction Manager has an agreement with DocuSign, Inc. ("DocuSign") with respect to the DocuSign electronic signing system (the "DocuSign System"). The

Additions and Deletions Report for AIA Document C132 – 2019. Copyright © 1973, 1980, 1992, 2009, and 2019. All rights reserved. "The American Institute of Architects," "American Institute of Architects," "AIA," the AIA Logo, and "AIA Contract Documents" are trademarks of The American Institute of Architects. This document was produced at 10:08:29 CST on 02/25/2026 under Subscription No.20240079516 which expires on 12/13/2026, is not for resale, is licensed for one-time use only, and may only be used in accordance with the AIA Contract Documents® Terms of Service. To report copyright violations, e-mail docinfo@aiacontracts.com.
**User Notes:** (699f1e5e7f2986a885297bea)

DocuSign System may be used to facilitate the administration and execution of the Owner's Construction Contracts with the Multiple Prime Contractors, as well as various other Contract Documents requiring signatures. Should the Owner elect to have the Construction Manager use the DocuSign System with respect to any portion of the Project, the Owner acknowledges and agrees that (i) the Owner conducted its own independent investigation and evaluation as to all legal and other considerations related to its decision to use the DocuSign System on the Project, (ii) the Owner did not rely on any advice, recommendations or representations of the Construction Manager in making the Owner's independent determination to use the DocuSign System on the Project, (iii) the Construction Manager and DocuSign are not affiliated with each other and the Construction Manager does not warrant or guarantee any portion of the DocuSign System, (iv) the Construction Manager does not warrant or guarantee that the DocuSign system complies with or satisfies any legal requirements applicable to its use on the Project, and (v) to the fullest extent permitted by law, the Owner waives, and shall hold harmless and indemnify the Construction Manager from and against, all claims, causes of action, costs, expenses and damages (including reasonable attorney's fees) arising out of or resulting from the use of the DocuSign System on the Project.

**PAGE 25**

This Agreement is entered into as of the day and year first written above. This Agreement may be executed in any number of counterparts, each of which when so executed and delivered shall be deemed an original and all of which counterparts, taken together, shall constitute one and the same instrument. Delivery of an executed counterpart of a signature page of this document by facsimile, pdf or other generally accepted electronic means (e.g., DocuSign) shall be effective as delivery of a manually executed counterpart of this document.

**City of Cottage Grove** **Kraus-Anderson® Construction Company**

**Variable Information**

**PAGE 1**

**AGREEMENT** made as of the 18th day of February in the year 2026

City of Cottage Grove

12800 Ravine Parkway South

Cottage Grove, MN 55016

Kraus-Anderson Construction Company

501 South 8th Street

Minneapolis, MN 55404

Cottage Grove Ice Arena – Lobby Renovation

8020 80th Street South

Cottage Grove, MN 55016

Oertel Architects, LTD.

1795 Saint Clair Avenue

Additions and Deletions Report for AIA Document C132 – 2019. Copyright © 1973, 1980, 1992, 2009, and 2019. All rights reserved. "The American Institute of Architects," "American Institute of Architects," "AIA," the AIA Logo, and "AIA Contract Documents" are trademarks of The American Institute of Architects. This document was produced at 10:08:29 CST on 02/25/2026 under Subscription No.20240079516 which expires on 12/13/2026, is not for resale, is licensed for one-time use only, and may only be used in accordance with the AIA Contract Documents® Terms of Service. To report copyright violations, e-mail docinfo@aiacontracts.com.
**User Notes:** (699f1e5e7f2986a885297bea)

St. Paul, MN 55105

**PAGE 2**

Renovation of the main lobby, offices, concessions and associated spaces within the existing Cottage Grove Ice Arena

See Section 1.1.1

**PAGE 3**

Final Construction Documents are anticipated Fall 2026

Anticipated to be March 2027, pending the receipt of all applicable permits

Multiple Prime Contracts

Zac Dockter

City of Cottage Grove – Parks & Recreation Director

12800 Ravine Parkway South

Cottage Grove, MN 55016

651.458.2808

zdockter@cottagegrovemn.gov

**PAGE 4**

Mike Phillips

Sr. Project Manager

Kraus-Anderson Construction Company

**PAGE 5**

501 South 8th Street

Minneapolis, MN 55404

651.447.3247

mike.phillips@krausanderson.com

**PAGE 13**

| | | |
|---|---|---|
| **§ 4.1.1.1** | Measured drawings | Owner |
| **§ 4.1.1.2** | Tenant-related services | Owner, if required |
| **§ 4.1.1.3** | Commissioning | Owner, if required |

Additions and Deletions Report for AIA Document C132 – 2019. Copyright © 1973, 1980, 1992, 2009, and 2019. All rights reserved. "The American Institute of Architects," "American Institute of Architects," "AIA," the AIA Logo, and "AIA Contract Documents" are trademarks of The American Institute of Architects. This document was produced at 10:08:29 CST on 02/25/2026 under Subscription No.20240079516 which expires on 12/13/2026, is not for resale, is licensed for one-time use only, and may only be used in accordance with the AIA Contract Documents® Terms of Service. To report copyright violations, e-mail docinfo@aiacontracts.com.
**User Notes:** (699f1e5e7f2986a885297bea)

| | | |
|---|---|---|
| **§ 4.1.1.4** | Development of a commissioning plan | Owner, if required |
| **§ 4.1.1.5** | Sustainable Project Services pursuant to Section 4.1.3 | N/A |
| **§ 4.1.1.6** | Furniture, furnishings and equipment delivery, and installation coordination | Construction Manager, if required |
| **§ 4.1.1.7** | Furniture, furnishings and equipment procurement assistance | N/A |
| **§ 4.1.1.8** | Assistance with site selection | N/A |
| **§ 4.1.1.9** | Assistance with selection of the Architect | Owner |
| **§ 4.1.1.10** | Furnish land survey | Owner, if required |
| **§ 4.1.1.11** | Furnish geotechnical engineering services | Owner |
| **§ 4.1.1.12** | Provide insurance advice | Owner, if required |
| **§ 4.1.1.13** | Provide supplemental Project risk analysis and mitigation strategies | Owner, if required |
| **§ 4.1.1.14** | Stakeholder relationships management | N/A |
| **§ 4.1.1.15** | Owner moving coordination | N/A |
| **§ 4.1.1.16** | Coordination of Owner's Separate Contractors | Construction Manager, if required |
| **§ 4.1.1.17** | Other Supplemental Services | N/A |
| | | |

**PAGE 15**

**§ 4.2.5** If the services covered by this Agreement have not been completed within ~~(~~ seventeen ( 17 ) months of the date of this Agreement, through no fault of the Construction Manager, extension of the Construction Manager's services beyond that time shall be compensated as Additional Services.

**PAGE 18**

[ X ] Litigation in a court of competent jurisdiction

**PAGE 21**

**§ 11.4** Compensation for Supplemental and Additional Services of the Construction Manager's consultants when not included in Sections 11.2 or 11.3, shall be the amount invoiced to the Construction Manager plus two and one-quarter percent ( 2.25 %), or as follows:

**PAGE 23**

**§ 11.6.2** For Reimbursable Expenses the compensation shall be the expenses incurred by the Construction Manager and the Construction Manager's consultants plus two and one-quarter percent ( 2.25 %) of the expenses incurred.

**§ 11.8.1.1** An initial payment of ~~(~~ ~~$~~ zero dollars ($ 0.00 ) shall be made upon execution of this Agreement and is the minimum payment under this Agreement. It shall be credited to the Owner's account in the final invoice.

Additions and Deletions Report for AIA Document C132 – 2019. Copyright © 1973, 1980, 1992, 2009, and 2019. All rights reserved. "The American Institute of Architects," "American Institute of Architects," "AIA," the AIA Logo, and "AIA Contract Documents" are trademarks of The American Institute of Architects. This document was produced at 10:08:29 CST on 02/25/2026 under Subscription No.20240079516 which expires on 12/13/2026, is not for resale, is licensed for one-time use only, and may only be used in accordance with the AIA Contract Documents® Terms of Service. To report copyright violations, e-mail docinfo@aiacontracts.com.
**User Notes:** (699f1e5e7f2986a885297bea)

# *Certification of Document's Authenticity*

*AIA® Document D401™ – 2003*

I, , hereby certify, to the best of my knowledge, information and belief, that I created the attached final document simultaneously with its associated Additions and Deletions Report and this certification at 10:08:29 CST on 02/25/2026 under Order No. 20240079516 from AIA Contract Documents software and that in preparing the attached final document I made no changes to the original text of AIA® Document C132™ - 2019, Standard Form of Agreement Between Owner and Construction Manager as Adviser, other than those additions and deletions shown in the associated Additions and Deletions Report.

_____

*(Signed)*

_____

*(Title)*

_____

*(Dated)*

AIA Document D401 – 2003. Copyright © 1992 and 2003. All rights reserved. "The American Institute of Architects," "American Institute of Architects," "AIA," the AIA Logo, and "AIA Contract Documents" are trademarks of The American Institute of Architects. This document was produced at 10:08:29 CST on 02/25/2026 under Order No.20240079516 which expires on 12/13/2026, is not for resale, is licensed for one-time use only, and may only be used in accordance with the AIA Contract Documents® Terms of Service. To report copyright violations, e-mail docinfo@aiacontracts.com.
**User Notes:** (699f1e5e7f2986a885297bea)

# City Council Action Request

# 7.Q.

| | |
|---|---|
| **Meeting Date** | 3/4/2026 |
| **Department** | Engineering |
| **Agenda Category** | Action Item |
| **Title** | 2026 Washington County Grant Agreement for Municipal Recycling |
| **Staff Recommendation** | Approve the 2026 Grant Agreement for Municipal Recycling Grant Distribution in the amount of $60,078.00. |
| **Budget Implication** | N/A |

**Attachments**

| | |
|---|---|
| 1. | 1-2026 Recycling Grant Reimbursement Acceptance_2-27-26 |
| 2. | City of Cottage Grove 2026 Recycling Grant_ |

**To:** Honorable Mayor and City Council
Jennifer Levitt, City Administrator

**From:** Joe Fox, PE, Project Engineer

**Date:** February 27, 2026

**Re:** 2026 Washington County Grant Agreement for Municipal Recycling

---

## Background

In an effort to improve recycling, the Washington County Department of Public Health and Environment awards grants to participating cities to fund recycling awareness messaging and programming for residents. The annual recycling grant reimburses the city for qualifying recycling programs.

## Discussion

The County grant for Cottage Grove in 2026 is $60,078.00. The city will use the grant funding for the food scraps collection program, the spring clean-up event at Public Works, for mattress collection and recycling, and to offset the costs of articles on recycling topics that appear in Cottage Grove Reports, and on other recycling-related projects. The grant funding also reimburses the city for staff time spent working on recycling programs.

## Recommendation

It is recommended that the City Council approve the 2026 Grant Agreement for Municipal Recycling Grant Distribution in the amount of $60,078.00.

**2026**
**GRANT AGREEMENT**
**FOR**
**MUNICIPAL RECYCLING GRANT DISTRIBUTION**

THIS AGREEMENT made and entered into by and between the County of Washington, hereinafter referred to as the "County", and the City of Cottage Grove, 12800 Ravine Parkway South, Cottage Grove, MN 55016, hereinafter referred to as the "Grantee".

WHEREAS, the County desires to encourage and provide opportunities for residential recycling to reduce the County's reliance on solid waste disposal facilities, and

WHEREAS, the Washington County Board of Commissioners has budgeted funds to be used to further develop recycling projects in the County.

NOW, THEREFORE, the parties hereto agree as follows:

1. **Term**:

   The term of the Agreement shall be from the date this Agreement is approved by the County to December 31, 2026.

2. **The County's Obligations**:

   The County will pay the Grantee an amount of up to $60,078.00 which is to be used for recycling program expenses in 2026. Payment will be within 60 days of execution of this Agreement.

3. **The Grantee's Obligations**:

   a. The Grantee agrees to follow their 2026 Municipal Recycling Grant Application and the guidelines therein (Exhibit A).

   b. The Grantee will use all recycling grant money received in 2026 as a result of this Agreement, for base funding activities, recycling projects, and public education related to recycling, as indicated in Exhibit A. If all recycling grant funds are not used within the grant period, the Grantee must return unexpended funds to the County unless the County approves utilizing the unspent funds for recycling projects the following year.

   c. The Grantee shall sign and return this Agreement to the County by July 1, 2026. Failure to do so will result in a reduction or loss of grant funds.

   d. The Grantee agrees to support State efforts in obtaining hauler reports by ensuring compliance through ordinance, contract or license requirements and the ability to exercise punitive actions, if needed.

   e. The Grantee will prepare and submit annual work plan project reports to the County. The reports shall cover the time period from January 1 to December 31 and shall be submitted to the County by January 31st of the year following the reporting period. The annual reports are available on the County's Municipal Recycling Grant Application and Reporting software (Re-TRAC Connect).

   f. Pursuant to Minnesota Statutes Sections 115A.46 and 115A.471, all waste

generated by city/township government activities (including city/town halls, public works buildings, parks, and for city/townships that arrange for waste services on behalf of their residents) shall be delivered to the Ramsey/Washington Recycling and Energy Center in Newport for disposal. Failure to comply with this provision shall constitute a breach of this Grant Agreement.

g. The parties agree that if the Grantee contracts or otherwise arranges for municipal solid waste hauling service on behalf of its residents and/or businesses and the Grantee issues bills for this service, the Grantee shall bill the County Environmental Charge (CEC) as a separate line item on the solid waste bill and shall make reasonable effort to collect the CEC. Exception to this provision is if the licensed hauler collected the CEC for the previous year. All County Environmental Charges collected shall be remitted to the County according to section 14.5 of Washington County Ordinance #178 or its replacement, Ordinance #194, effective July 1st, 2014. Failure of the Grantee to comply with this provision shall constitute a breach of this Grant Agreement and will result in loss of grant funds.

4. **Indemnification and Insurance**:

a. The Grantee agrees it will defend, indemnify and hold harmless the County, its officers and employees against any and all liability, loss, costs, damages, and expenses which the County, its officers, or employees may hereafter sustain, incur, or be required to pay arising out of the negligent or willful acts or omissions of the Contractor/Consultant in the performance of this Agreement.

b. The Grantee agrees that in order to protect itself, as well as the County, under the indemnity provisions set forth above, it will at all times during the term of this Contract, keep in force the following insurance protection in the limits specified:

   a. Commercial General Liability with Contractual liability coverage in the amount of $1,500,000 per occurrence with a $3,000,000 aggregate. An excess or umbrella liability policy may be used in conjunction with primary coverage limits to meet the minimum limit requirements.
   b. Automobile coverage in the amount of $1,500,000 on a combined single limit basis and include hired and non-owned.
   c. Worker's Compensation in statutory amount (if applicable) of bodily injury by accident in the amount of $500,000 each accident, bodily injury by disease in the amount of $500,000 each employee, and bodily injury by disease in the amount of $500,000 policy limit.

Washington County shall be listed as additional insured as it relates to Commercial General Liability and Automobile Liability.

Prior to the effective date of this Contract, the Grantee will furnish the County with a current and valid proof of insurance certificate indicating insurance coverage in the amounts required by this Contract. This certificate of insurance shall be on file with the County throughout the term of the Contract. As a condition subsequent to this

Contract, Grantee shall ensure that the certificate of insurance provided to the County will at all times be current. The parties agree that failure by the Grantee to maintain a current certificate of insurance with the County shall be a substantial breach of the Contract and payments on the Contract shall be withheld by the County until a certificate of insurance showing current insurance coverage in amounts required by the Contract is provided to the County.

Any policy obtained and maintained under this clause shall provide that it shall not be cancelled, materially changed, or not renewed without thirty days' notice thereof to the County.

5. **Data Practices**:

All data collected, created, received, maintained, or disseminated for any purposes by the activities of Grantee because of this Agreement is governed by the Minnesota Government Data Practices Act, Minnesota Statutes Chapter 13, as amended, the Minnesota Rules implementing such Act now in force or as adopted, as well as Federal regulations on data privacy.

6. **Condition Subsequent:**

It is understood and agreed that in the event that reimbursement to the County from state sources is not obtained and continued at a level sufficient to allow the Grant, the obligations of each party hereunder shall thereupon be reviewed to determine the necessity of renegotiating all or parts of this Agreement.

7. **Records Availability and Retention**:

Pursuant to Minnesota Statute Section 16C.05, Subd. 5, the Grantee agrees that the County, the State Auditor, or any of their duly authorized representatives at any time during normal business hours and as often as they may reasonably deem necessary, shall have access to and the right to examine, audit, excerpt, and transcribe any books, documents, papers, records, etc. which are pertinent to the accounting practices and procedures of the Grantee and involve transactions relating to this Agreement.

Grantee agrees to maintain these records for a period of six (6) years from the date of termination of this Agreement.

8. **Independent Contractor**:

Nothing contained in this Agreement is intended or should be construed as creating the relationship of co-partners or joint ventures with the County. No tenure or any rights or benefits, including Worker's Compensation, Unemployment Insurance, medical care, sick leave, vacation leave, severance pay, PERA, or other benefits available to County employees, shall accrue to the Grantee or employees of the Grantee performing

services under this Agreement.

9. **Nondiscrimination**:

   The Grantee agrees to comply with the nondiscrimination provision set forth in Minnesota Statute 181.59. The Grantees failure to comply with section 181.59 may result in cancellation or termination of the agreement, and all money due or to become due under the contract may be forfeited for a second or any subsequent violation of the terms or conditions of this contract.

10. **Possession of Firearms on County Premises:**

    Unless specifically required by the terms of this Contract or the person it is subject to an exception provided by 18 USC§ 926B or 926C (LEOSA) no provider of services pursuant to this Contract or subcontractors shall carry or possess a firearm on County premises or while acting on behalf of Washington County pursuant to the terms of this Contract. Violation of this provision is grounds for immediate suspension or termination of this Contract.

11. **Noncompliance by Grantee**:

    If the County finds that there has been a failure to comply with the provisions of this Agreement, the County may terminate the Agreement at any time following seven (7) days written notice to the Grantee and upon failure of the Grantee to cure the default within the seven day period. The County will require the Grantee to repay the grant funds in full or in a portion determined by the County. Nothing herein shall be construed so as to limit the County's legal remedies to recover grant funds.

12. **Termination**:

    This Agreement may be canceled by either party upon thirty (30) days written notice. Notice to the Cities shall be mailed to the City Administrator or to the City Clerk if there is no Administrator. Notice to Townships shall be mailed to the Township Clerk. Notice shall be sent to the official business address of the City or Township. Notice to the County shall be mailed to: Department of Public Health and Environment, 14949 62nd Street N, PO Box 6, Stillwater, MN 55082-0006.

13. **Merger and Modification**:

    a. It is understood and agreed that the entire Agreement between the parties is contained here and that this Agreement supersedes all oral Agreements and negotiations between the parties relating to the subject matter. All items referred to in this Agreement are incorporated or attached and are deemed to be part of this Agreement.

b. Any material alterations, variations, modifications, or waivers of provisions of this Agreement shall be valid only when they have been reduced to writing as an Amendment and signed by the parties.

14. **Force Majeure Events:**
For purposes of this Agreement, “Force Majeure” refers to an event that by its nature is unforeseen, or, if it was foreseen, was beyond reasonable control by either party. With a Force Majeure event, the parties agree to 1) make an attempt to reschedule any such municipally planned events impacted included but not limited to community clean-ups, collection events, planned performances, and promotional campaigns, or 2) substitute the impacted event with other acceptable recycling efforts as outline in Exhibit A of this Agreement.

15. **Conflict of Interest:**
Grantee affirms that, to the best of its knowledge, this Contract does not present a conflict of interest with any party or entity, which may be affected by the terms of this Contract. The Grantee agrees that, should any conflict or potential conflict of interest become known, it will immediately notify the County of the conflict or potential conflict, and will advise the County whether it will or will not resign from the other engagement or representation. Unless waived by the County, a conflict or potential conflict may, in the County's discretion, be cause for cancellation or termination of this Contract.

16. **Jurisdiction & Venue:**
This Contract, amendments, and supplements thereto, shall be governed by the laws of the State of Minnesota. All actions brought under this Contract shall be brought exclusively in Minnesota State Courts of competent jurisdiction with venue in Washington County.

[the remainder of this page is intentionally left blank]

IN WITNESS WHEREOF, the parties have executed this Agreement on the dates indicated below.

**GRANTEE**

BY:_____

TITLE:_____

DATE:_____

**WASHINGTON COUNTY**

BY:_____
David Brummel, Director
Department of Public Health
and Environment

DATE:_____

APPROVED AS TO FORM

BY: _____
Ass't Washington Co. Attorney

DATE: _____

# 2026 Municipal Recycling Grant Program Guidelines

Washington County

# Contents

Program Overview ..... 3
Eligibility Requirements ..... 3
Funding Application ..... 4
Grant Funding Allocation ..... 4
Eligible Expenses ..... 5
Ineligible Expenses ..... 5
Standard List of Residential Curbside Recyclables ..... 6
Verification of Compliance with Minnesota Statute 115.471 and 115A.46 Public Entities Law ..... 6
Reporting ..... 7
Hauler Reporting ..... 7
Annual Work Plan Project Status Reports ..... 7
Work plan project status report: ..... 7
Final Program Expenditures Report ..... 7
Recycling Performance ..... 8
County Responsibilities ..... 8
Supplemental Documents ..... 9
Appendix A – Municipal Recycling Grant Continuum ..... 10

# Program Overview

Municipalities in Washington County are responsible for establishing and maintaining municipal recycling programs. The County provides educational, financial and technical assistance to local governments to aid these programs. The County's municipal recycling grant program assists municipalities with recycling program expenses.

Grant funding levels are dependent on municipality household counts and recycling program activities. Municipalities are encouraged to apply for the maximum level of funding. Four levels of grant funding are available:

- Base Funding: funding to cover administrative and program expenses to sustain existing programs and covers the BASIC category of the recycling continuum. Base funding is dependent on the number of households in a community.
- Project Funding: funding to target specific grant projects that are related to achieving recycling goals and covers projects contained in the Improved Project and Advanced Funding categories of the recycling continuum.
- Incentive Funding: funding for one-time special projects or purchases that cannot be covered with project funding. Improved Project funding shall be used for before incentive funding is applied for.
- Shared Resources Funding: funding for collaboration among multiple municipalities.

## Eligibility Requirements

To receive funding through the Washington County municipal recycling grant program, municipalities must meet the following eligibility requirements:

1. A municipality's curbside recycling program shall be established by; 1) ordinance, 2) contracted with a hauler, or 3) a hauler be licensed to operate within the municipality.
2. Municipality must support State efforts in obtaining hauler reports by ensuring compliance through ordinance, contract or license requirements and the ability to exercise punitive actions, as needed.
3. All multi-unit dwellings (4 or more units) must have recycling service available.
4. The municipality must maintain the components under the Base Funding category of the recycling continuum (Appendix A).
    a. Minimum website requirements include the following:
        i. Link to the Washington County Disposal Directory
        ii. Link to the Ramsey/Washington Food Scraps Pick-up Program webpage
        iii. Link to the Washington County Environmental Center webpage
        iv. Link to the R&E BizRecycling webpage
        v. Link to the Washington County container loan webpage
5. Municipal staff must participate in two recycling coordinator meetings and/or meetings with PHE staff per year to develop the grant project work plan(s).
6. Supply Verification of Compliance with Minnesota Statute 115.471 and 115A.46 Public Entities Law (if applicable).
7. Submit completed previous grant cycle expenditures and project final reports.
8. Submit complete application and project(s) form, as applicable.
    a. Complete projects and performance measures outlined on the application or return funds for incomplete projects.

b. Continue to make progress along the municipal recycling performance continuum.

Washington County, on behalf of State requirements, reserves the right to withhold any and all funding from municipalities for; 1) failure to report on previous grant activities of a municipality (not in good effort), 2) failure to complete application and project work plans and 3) failure to not actively engaging with PHE staff in grant funding activities and the execution of projects.

## Funding Application

Municipalities must complete a funding application by February 27th, 2026, to receive grant funding. Applications and yearly work plan(s) must be submitted using Re-TRAC Connect.

## Grant Funding Allocation

Funding is separated into four (4) categories:

- **Base funding:** funding for activities that sustain the municipalities existing recycling program. This includes funding for administration of a recycling ordinance, resident questions, completing the municipal grant application, work plan(s) and annual report, residential recycling information, website maintenance and meeting the Base Funding category of the continuum, which can be found on Appendix A. The table below shows how base funding is determined for each community.

| # of Households | Eligible Amount for Base Funding |
|---|---|
| **≤450** | $1,500.00 |
| **451-1000** | $2,500.00 |
| **1001-2000** | $5,000.00 |
| **2001-5000** | $10,000.00 |
| **5001-10000** | $20,000.00 |
| **≥10000** | $30,000.00 |

**Note:** household data comes from the Metropolitan Council's population estimates. Estimates are the official estimates for state government purposes to determine government aid (LGA) and street aid allocations. Previous year estimates are prepared the following year and certified by July 15.

- **Project funding**: funding to develop and implement new or expanded recycling projects that encourage movement along the recycling continuum in the Improved Project and Advanced Project categories, found on Appendix A. A municipality is eligible to receive $0.50/household/project. A municipality may qualify for up to four projects per year.
- **Incentive funding**: one-time special project funding for large purchases that cannot be covered with project funding. Incentive funding can be applied for after the February 26th grant application deadline so long as the municipality meets to discuss with PHE staff. Funding can be requested and utilized at any time during the 2026 grant cycle.
- **Shared Resource funding**: this is targeted to fund collaborations among municipalities. Municipalities participating in shared resource funding must designate one municipality to act as representative and fiscal agent to be liaison with the County.

## Eligible Expenses

Grant funds are used for the following expenses and are subject to approval by PHE staff:

- Administrative (maximum of 75% of total grant funds)
    - Salary and legal costs of personnel only while directly working on, part time or full time, the planning, implementation and promotion of eligible activities.
    - Salaries, benefits and mileage for consultant services or temporary help with prior written approval from PHE and must be related to eligible activities.
    - County-approved educators, performers, and municipal staff who help implement required education activities using County toolkits and standardized messaging.
    - Attendance or training opportunities for municipal staff
- Capital Expenses
    - Event recycling containers
    - Public space recycling containers
    - Recycling containers and education for municipally owned/operated buildings and internal spaces
    - Resident-only municipal food scraps drop-off site
- Public Education and Promotion*
    - Design, production and distribution of flyers, brochures, newsletter articles, posters, advertisements, videos, billboards, audio (radio, video, television, theater), electronic (website and e-news) and other communication promotional items reaching at least 50% of a community's population
    - Disseminating County flyers, brochures, newsletters, posters, advertisements, videos, billboards, audio (radio, video, television, theatre) electronic (website and e-news) and other communication promotional items
    - Development of promotional materials for a community event such as a clean-up day or road clean up event
    - The percentage of cost for a municipality's newsletter devoted to recycling
    - Environmental commissions and related expenses directly related to recycling and waste education (maximum of 25% of total grant funds)
    - Materials necessary for in-person or other events
- Singular Item Collection
    - ~~o~~ Design, production and distribution of flyers, brochures, newsletter articles, posters, advertisements, videos, billboards, audio (radio, video, television, theater), electronic (website and e-news) and other communication specific to the collection of a specific item or material.*
    - Disposal costs of items collected for recycling or reuse at special collection events by an approved County vendor
- Other
    - Yard waste, recycling or composting project
    - Reuse projects and promotion
    - Other expenses with prior written approval from the PHE

*Municipalities should reference MN State Statute 16C.073 for purchasing of paper for print materials.

## Ineligible Expenses

Ineligible expenses are considered the following and subject to review by PHE:

1. Permanent, single sort, year-round recycling drop-off locations
2. Print materials already supplied by PHE as outlined on the print materials request form. Print materials that are customized with municipal logos are exempt
3. Disposal expenses for community clean up events or road cleanup activities where specific items are not directed to recycling or reuse
4. Expenses for non-waste abatement, such as energy or ground water
5. Ongoing recycling or garbage service fees (collection, processing, transportation)
6. Costs for office equipment and supplies
7. Street sweeping expenses
8. Beautification projects or rain gardens
9. Lobbying and legal expenses
10. Food or refreshments
11. Funding currently budgeted or being provided by applicant

# Standard List of Residential Curbside Recyclables

PHE created the list of standard recyclable materials to be collected curbside after researching current materials collected curbside by haulers as well as the availability of viable end markets for those materials. This list covers only the **minimum** materials recommended for residential curbside collection. A municipality may require the collection of additional recyclable materials. A municipality may choose how to enforce such as through ordinance or hauler licensing. The Standard List of Residential Curbside recyclables can be found at the link below.

Washington County Standard List of Residential Curbside Recyclables

This standard list of recyclables for single sort recycling collection will be periodically reviewed and updated by PHE as additional materials and end markets become available. PHE may add materials to this list and require municipalities to begin collection of the new materials within one year of receiving notification from the PHE.

# Verification of Compliance with Minnesota Statute 115.471 and 115A.46 Public Entities Law

As a condition of eligibility for the Washington County Municipal Recycling Grant funds, pursuant to Minnesota Statutes 115A.46, subd. 5 and 115A.471, all waste generated by municipal government activities, including, but not limited to city/town halls, public works buildings, parks, etc., and waste arranged or waste contract for on behalf of its residents (such as organized garbage collection), must be managed in accordance with the County's Solid Waste Management Plan and delivered to the

Ramsey/Washington County Resource Recovery Facility in Newport for disposal. Failure to comply with this provision shall constitute a breach of the Municipal Recycling Grant Agreement.

# Reporting

## Hauler Reporting

The Minnesota Pollution Control Agency (the State) will collect tonnage reports directly from haulers on behalf of counties and municipalities. Reports will be collected on a quarterly basis and will have tonnage amounts for MSW/garbage, recycling and source separated organics listed for each county. To ensure data is provided to the State quarterly, municipalities are expected to continue their role in enforcing hauler compliance through existing ordinances, contracts or licenses with haulers. Municipalities are expected to exercise punitive actions, if needed. The final, compiled hauler reports will be available on the County's Re-TRAC Connect system for municipality's to view after the reporting period has closed.

## Annual Work Plan Project Status Reports

Municipalities receiving funding through the Washington County municipal recycling grant program must complete annual work plan project status reports. The annual report is a measure of a municipality's progress towards meeting components on the recycling continuum and on program expenditures. Annual reports must be completed by the municipality receiving the grant by January 31st of each year using the County's Re-TRAC Connect system.

### Work plan project status report:

- project completion (yes/no)
- performance measurements (minimum of 3 forms of measurement, as identified in work plan, should be reported)
- description of information helpful to other municipalities desiring to replicate projects

### Final Program Expenditures Report

Municipalities receiving funding through the Washington County municipal recycling grant program must complete final program expenditures report at the end of the grant term. Reports must be completed to receive funding in future grant cycles. Components to be included in the final report includes the following:

- **Program expenditures:** *Total program expenditures must equal total program revenue.*
    - Administrative costs including
        - Direct salaries
        - Direct membership, training, subscriptions
        - Consultant services and or temporary help
        - Promotion
        - Design, printing and postage
        - Advertisements/Videos/Promotional items
        - Special events
        - Other (list and describe)
            - **Capital Costs**
            - **Collection Costs** (grant funds cannot be used for collection costs)
            - **Other**

- For each line item on the report's expenditures sheet, indicate:
  - Total County grant funds used
  - City/Township funds contributed
  - % of County grant used for line item
  - Total expenditures

## Recycling Performance

A municipality's performance will be evaluated on information from the annual work plan project status reports, and reasonable effort towards reaching outcomes from work plan activities implemented and progression along the recycling continuum. PHE reserves the right to request documentation for information submitted.

Failure by a municipality to demonstrate measurable progress towards one or more of the work plan goals will result in a Recycling Improvement Plan be submitted 90 days of being notified by PHE. The Plan must be negotiated with PHE and specify the efforts that will be undertaken by the municipality to improve its recycling program to achieve the identified goal in the work plan by implement strategies agreed upon by municipal staff and PHE. The plan should focus on components of the recycling continuum. Funding will be withheld until the municipality's Plan is completed and approved by PHE.

# County Responsibilities

The County will be responsible for the following:

1. Grant documents
   a. PHE will provide the grant application and work plan by January 1st for each municipality to use to request grant funding and to develop project work plans. PHE will also provide report forms for their recycling program(s). Annual reports are available year-round.
2. Meetings
   a. PHE staff will host quarterly recycling coordinator meetings and will make meeting materials available on the City Recycling Resources webpage on the County's website. PHE staff will also coordinate individual work plan meetings (as needed) with each municipality to identify grant projects.
3. Technical assistance
   a. PHE staff will help identify if and how additional technical assistance is needed. PHE staff strongly encourage municipal staff to use technical assistance as provided.
4. Payments
   a. Grant payment will be made in one installment, which is to be used for recycling program expenses in 2026. The payment will be made within 60 days of execution of the Recycling Grant Agreement. Incentive funding will disbursed upon the verification of project completion – until such verification, the municipality is responsible for any payments necessary for the completion of the project.
5. Recycling tonnages
   a. Recycling tonnages for each municipality will be collected by the Minnesota Pollution Control Agency (the State) from the community's recycling hauler(s) on a bi-annual basis. Reports are available by request.
6. Residential recycling survey
   a. If requested, PHE will develop a survey on residents' recycling knowledge and behavior for municipalities to promote and distribute regularly.

7. Online recycling information and best practices
    a. PHE will maintain the City Recycling Resources webpage on the County's website for use by municipal staff to obtain information on recycling best practices, track recycling coordinator meetings and access templates and other educational information designed specifically for use by municipalities.
8. Commercial Recycling
    a. PHE has a separate funding mechanism to promote and support recycling in the commercial sector. This program is called BizRecycling and more information can be found at www.bizrecycling.com.
9. Recycling in multi-unit dwelling (4+ units)
    a. PHE has a separate funding mechanism to promote and support recycling in multi-unit dwellings. More information and ways to access this program can be found on www.bizrecycling.com.

# Supplemental Documents

- Updated waste and recycling ordinance(s) (if applicable)
- Updated waste and recycling contract(s) (if applicable)
- City/Township council meeting minutes discussing/approving updated ordinances/contracts (if applicable)
- Verification of public entities law (MN Statute 115.471 and 115A.46) (if applicable)
- A certificate of insurance indicating the municipalities' general liability limits as indicated in Section 4 of the Agreement. *Please include certificate with the application.*

# Appendix A – Municipal Recycling Grant Continuum

# Washington County Municipal Recycling Grant Continuum

| *Base Funding* | *Improved Project* | *Advanced Project* |
|---|---|---|
| **Administrative** | | |
| Actively participate in municipal recycling grant program. | Engage in professional development around recycling best practices. | Provide professional development opportunities to municipal leadership and staff on recycling best practices. |
| Participate in two recycling coordinator or other meetings with staff per year. | Develop partnerships within the community to create more widespread knowledge of recycling best practices. | Establish partnerships with other municipalities. |
| Establish a curbside recycling program by ordinance or contract. | Update solid waste/recycling ordinance and/or contract with County for assistance to meet current state requirements. | Update solid waste/recycling ordinance and/or contract with County for assistance to incorporate best practices. |
| Require collection of County's standard list of recyclables. | Support community-wide efforts to increase recycling of non-standard or hard to recycle items. | Adopt municipal policies to support waste reduction, reuse, and recycling for non-standard or hard to recycle items. |
| Support state efforts in obtaining hauler reports through ordinance, contract, or license requirements. | Audit hauler collection reports and tonnages collected. | Advance initiatives as part of the GreenStep Cities Program. |
| **Capital Expenses** | | |
| Establish and update signage for collection best practices. | Update materials to be location/culturally specific and ADA compliant. | Establish signage and communication materials that are location/culturally specific and ADA compliant. |
| Provide recycling in municipally owned/operated public spaces. | Expand recycling in municipally owned/operated public spaces. | Establish permanent away-from-home drop-off recycling opportunities. |
| Provide recycling in municipally owned/operated buildings (non-public facing.) | Expand recycling in municipally owned/operated facilities (non-public) for collection of non-standard materials. | Establish programs or policies that target reuse. |
| **Education & Information** | | |
| Establish and maintain webpage with recycling and waste information that meets minimum requirements set by the County. (As outlined in grant guidelines.) | Improve information on webpage to encourage waste reduction and reuse. | Provide resources on municipal webpages for materials that are not collected by haulers, the municipality, or the County. |
| Share designated County-created communications. | Share County or other partner created communications that promote hard to recycle items or problematic materials. | Establish recycling targets for the community and communicate these efforts in a climate or sustainability plan. |
| Update printed and digital resources as shared by the County. | Encourage special events in community to use the County's special event resources. | Encourage special events in the community to utilize or create municipal-owned special event resources. |
| Reach 50 percent of resident population with recycling and waste information and programs. | Conduct outreach specifically to new residents with city and County recycling and waste information. | Conduct targeted outreach to underserved populations within the community using resources such as trusted messengers. |
| Provide one educational material to residents with information on the Food Scrap Pickup Program. | Provide targeted information to new residents to participate in the Food Scrap Pickup Program. | Provide food scrap recycling for events hosted or sponsored by the municipality or located on public property. |
| **Multi-Unit Dwellings** | | |
| Ensure all new construction, multi-unit dwellings (4 or more units) have recycling services available. | Provide educational materials to existing properties and property managers and refer them to County staff for expanding opportunities. | Host clean-up events for multi-units based on multi-unit turnover. |

# Washington County Municipal Recycling Grant Continuum

| *Base Funding* | *Improved Project* | *Advanced Project* |
|---|---|---|
| **Administrative** | | |
| Actively participate in municipal recycling grant program. | Engage in professional development around recycling best practices. | Provide professional development opportunities to municipal leadership and staff on recycling best practices. |
| Participate in two recycling coordinator or other meetings with staff per year. | Develop partnerships within the community to create more widespread knowledge of recycling best practices. | Establish partnerships with other municipalities. |
| Establish a curbside recycling program by ordinance or contract. | Update solid waste/recycling ordinance and/or contract with County for assistance to meet current state requirements. | Update solid waste/recycling ordinance and/or contract with County for assistance to incorporate best practices. |
| Require collection of County's standard list of recyclables. | Support community-wide efforts to increase recycling of non-standard or hard to recycle items. | Adopt municipal policies to support waste reduction, reuse, and recycling for non-standard or hard to recycle items. |
| Support state efforts in obtaining hauler reports through ordinance, contract, or license requirements. | Audit hauler collection reports and tonnages collected. | Advance initiatives as part of the GreenStep Cities Program. |
| **Capital Expenses** | | |
| Establish and update signage for collection best practices. | Update materials to be location/culturally specific and ADA compliant. | Establish signage and communication materials that are location/culturally specific and ADA compliant. |
| Provide recycling in municipally owned/operated public spaces. | Expand recycling in municipally owned/operated public spaces. | Establish permanent away-from-home drop-off recycling opportunities. |
| Provide recycling in municipally owned/operated buildings (non-public facing.) | Expand recycling in municipally owned/operated facilities (non-public) for collection of non-standard materials. | Establish programs or policies that target reuse. |
| **Education & Information** | | |
| Establish and maintain webpage with recycling and waste information that meets minimum requirements set by the County. (As outlined in grant guidelines.) | Improve information on webpage to encourage waste reduction and reuse. | Provide resources on municipal webpages for materials that are not collected by haulers, the municipality, or the County. |
| Share designated County-created communications. | Share County or other partner created communications that promote hard to recycle items or problematic materials. | Establish recycling targets for the community and communicate these efforts in a climate or sustainability plan. |
| Update printed and digital resources as shared by the County. | Encourage special events in community to use the County's special event resources. | Encourage special events in the community to utilize or create municipal-owned special event resources. |
| Reach 50 percent of resident population with recycling and waste information and programs. | Conduct outreach specifically to new residents with city and County recycling and waste information. | Conduct targeted outreach to underserved populations within the community using resources such as trusted messengers. |
| Provide one educational material to residents with information on the Food Scrap Pickup Program. | Provide targeted information to new residents to participate in the Food Scrap Pickup Program. | Provide food scrap recycling for events hosted or sponsored by the municipality or located on public property. |
| **Multi-Unit Dwellings** | | |
| Ensure all new construction, multi-unit dwellings (4 or more units) have recycling services available. | Provide educational materials to existing properties and property managers and refer them to County staff for expanding opportunities. | Host clean-up events for multi-units based on multi-unit turnover. |

# City Council Action Request

# 7.R.

| | |
|---|---|
| **Meeting Date** | 3/4/2026 |
| **Department** | Engineering |
| **Agenda Category** | Action Item |
| **Title** | 2026 Standard Specifications for Utility and Street Construction, Standard Detail Plates, and Engineering Design Standards |
| **Staff Recommendation** | Approve the Cottage Grove 2026 Standard Specifications for Utility and Street Construction, the 2026 Standard Detail Plates, and the 2026 Engineering Design Standards. |
| **Budget Implication** | N/A |

**Attachments**

| | |
|---|---|
| 1. | Approve 2026 Standard Specs CC memo 2026-03-04 |
| 2. | 2026 Cottage Grove Standard Specifications |
| 3. | CG 2026 Engineering Design Standards_Final Draft |
| 4. | 2026 Detail Plates |

**To:** Honorable Mayor and City Council
Jennifer Levitt, City Administrator

**From:** Genevieve Tester, EIT, Graduate Engineer

**Date:** February 11, 2026

**Re:** Cottage Grove 2026 Standard Specifications for Utility and Street Construction, 2026 Standard Detail Plates, and 2026 Engineering Design Standards

---

## Background

City Standard Specifications, Detail Plates, and Engineering Design Standards serve as the foundational requirements for all City construction projects as well as private commercial and residential developments. These documents, which establish uniform standards for design, materials, and construction practices, ensure consistency, quality, and compliance across public and private infrastructure. Since 2020, annual revisions have kept the Standard Specifications and Detail Plates current. The Engineering Design Standards, which provide a streamlined reference for high-level requirements, are reviewed and updated periodically, typically every few years.

## Discussion

### Standard Specifications

Prior to the development of the Standard Specifications in 2018, individual specification documents were prepared by the City's design consultant for each public infrastructure project. For residential developments, where infrastructure is privately designed and constructed, extensive City plan review was required. Because these project-specific specifications were lengthy and complex, significant coordination and review were necessary to ensure compliance with City Standards. This resulted in additional costs to developers and additional time to design a development. The introduction of the Standard Specifications document streamlined this process by providing pre-approved specifications, thereby reducing review time and simplifying plan approval for developers, City staff, and consultants.

City staff, in collaboration with engineering consultants, have updated the Standard Specifications again to maintain conformance with applicable industry standards and MnDOT Standard Specifications for the 2026 construction season. These revisions include a limited number of minor changes identified during the previous construction season.

### Standard Detail Plates

Historically, the City has maintained a set of Standard Detail Plates used in construction plans to illustrate typical requirements. Examples include the City's standard bituminous street section, catch basin with sump, and utility-related construction details. These Detail Plates have been updated to align with revisions to the Standard Specifications and are enclosed for approval.

**Engineering Design Standards**

The Engineering Design Standards, previously titled *Engineering Guidelines* and last updated in 2024, were recently reviewed and revised to align with the current Standard Specifications and Detail Plates, ensuring continued relevance and accuracy.

## Recommendation

It is recommended that the City Council approve the Cottage Grove 2026 Standard Specifications for Utility and Street Construction, the 2026 Standard Detail Plates, and the 2026 Engineering Design Standards.

Cottage Grove

Where Pride and Prosperity Meet

# Standard Specifications for Utility and Street Construction

January 2026

# SECTION 00 01 10

# TABLE OF CONTENTS

**Introductory Information**
00 01 10 Table of Contents
00 71 00 Contracting Definitions

**SPECIFICATIONS GROUP**
**GENERAL REQUIREMENTS SUBGROUP**
**Division 01 - General Requirements**
01 31 00 Project Management and Coordination
01 33 00 Submittal Procedures
01 40 00 Quality Requirements
01 50 00 Temporary Facilities and Controls
01 57 13 Temporary Erosion and Sediment Control
01 70 00 Execution Requirements

**Division 02 - Existing Conditions**
02 41 13 Selective Site Demolition

**SITE AND INFRASTRUCTURE SUBGROUP**
**Division 12 - Furnishings**
12 41 00 Furnishings and Accessories

**Division 26 - Electrical and Lighting**
26 05 59 Irrigation System Electrical Supply
26 56 00 Exterior Lighting

**Division 31 - Earthwork**
31 10 00 Site Clearing
31 23 00 Excavation and Fill
31 23 13 Subgrade Preparation

**Division 32 - Exterior Improvements**
32 11 23 Aggregate Base Courses
32 11 25 Full Depth Reclamation
32 12 01 Flexible Paving
32 13 14 Concrete Walks, Medians, & Driveways
32 16 13 Concrete Curbs and Gutters
32 17 23 Pavement Markings
32 80 00 Irrigation System
32 92 00 Turf and Grasses
32 93 05 Planting Materials, Installation, and Establishment


© 2026 City of Cottage Grove, Minnesota

**Division 33 - Utilities**
33 01 38 Cured-in-Place Pipe (CIPP) Gravity
33 01 40 Sewer Pipe Joint Sealing
33 01 46 Manhole Rehabilitation
33 05 06 Trenching and Backfilling
33 05 18 Adjust Miscellaneous Structures
33 05 20 Reconstruct Miscellaneous Structures
33 05 28 Conduit for Private Utilities
33 05 97.36 Underground Utility Location System
33 08 30 Commissioning of Sanitary Sewerage Utilities
33 10 00 Water Utilities
33 14 18 Water Utility Service Laterals
33 31 00 Sanitary Sewerage Piping
33 31 14 Sanitary Sewerage Services
33 31 23 Sanitary Sewerage Force Main Piping
33 39 00 Sanitary Sewerage Structures
33 40 00 Stormwater Utilities
33 41 00 Subdrainage

**Division 34 - Transportation**
34 41 05 Traffic Signs and Devices

**END OF SECTION**


© 2026 City of Cottage Grove, Minnesota

# SECTION 00 71 00

# CONTRACTING DEFINITIONS

**PUBLIC PROJECTS:**

Owner: As identified in the Agreement (Section 00 52 00).

Engineer: As identified in the Agreement (Section 00 52 00).

Whenever reference is made to the Minnesota Department of Transportation Specifications, such reference shall mean "Standard Specifications for Construction" 2025 Edition (MnDOT Spec.) and all subsequent revisions and supplements. The word "Engineer" is understood to refer to the Engineer for the Owner.

**PRIVATE PROJECTS:**

Owner: Whenever reference is made within the City of Cottage Grove's Standard Specifications for Utility and Street Construction, the word "Owner" is understood to refer to the City of Cottage Grove.

Engineer: Whenever reference is made within the City of Cottage Grove's Standard Specifications for Utility and Street Construction, the word "Engineer" is understood to refer to the City of Cottage Grove's designated engineering representative.

Whenever reference is made to the Minnesota Department of Transportation Specifications, such reference shall mean "Standard Specifications for Construction" 2025 Edition (MnDOT Spec.) and all subsequent revisions and supplements. The word "Engineer" is understood to refer to the City of Cottage Grove's designated engineering representative.

Whenever reference is made to the General Conditions, such reference shall mean "Standard General Conditions of the Construction Contract" as published by the Engineers Joint Contract Documents Committee (EJCDC) 2018 version.

**END OF SECTION**


© 2026 City of Cottage Grove, Minnesota

This Page Left Blank Intentionally

# SECTION 01 31 00

# PROJECT MANAGEMENT AND COORDINATION

## PART 1 GENERAL

1.01 SUMMARY

A. Section Includes:
   1. General requirements for overall Project coordination.

1.02 PRICE AND PAYMENT PROCEDURES

A. Measurement and Payment:
   1. All Work and costs of this Section shall be incidental to the Project and included in the Total Base Bid.

B. Related Sections:
   1. 01 33 00 Submittal Procedures

1.03 PROJECT COORDINATION

A. Coordinate all Work with the Engineer and City engineering staff. City engineering staff are located at Cottage Grove Utility and Engineering Building, 10875 Ideal Ave South, Cottage Grove MN 55016. Regular office hours are 8 A.M. to 4 P.M.

B. Coordinate the Work of the Contract and the Work of others relating to the Project. Work with others to cause the efficient and timely completion of the Work. These responsibilities include, among others, the following:
   1. Coordinate activities of all sub-contractors.
   2. Inform emergency services (Police, Fire), Post Office, and Schools of traffic situations as appropriate to Project circumstances.
   3. Inform City Public Works Department of Project schedule and upcoming activities that will affect their operation.
   4. Inform non-municipal utilities (gas, telephone, electric, etc.) of Project schedule to allow for planning of any activities they wish to coordinate with the Project.
   5. Maintain and coordinate access needs of adjacent properties.
   6. Conform to the requirements of Section 01 33 00.

1.04 UTILITIES

A. Notify Gopher State One Call before starting construction in a given area requesting utility locates in the Site:
   1. Engineer has requested information at time of construction document preparation on existing private utilities via design locate request through the Gopher State One Call Program.
   2. The original version of the information supplied by the utilities is available for viewing at the office of the Engineer.


© 2026 City of Cottage Grove, Minnesota

B. Known Information On Private Utilities: Known information regarding the private utilities is depicted on the Drawings and information supplied by utility companies can be viewed at the office of the Engineer by request.

C. Project Utility Sources: Coordinate Work with the following utility owners:
   1. City of Cottage Grove Public Works 651-458-2808
   2. Gopher State One Call 651-454-0002

D. Locating Owner owned public utilities:
   1. Owner will complete initial locating of all existing Owner owned public utilities including communication lines, lighting, sanitary sewer, signal, storm sewer, and water utility. The request for initial locate of all utilities with the project limits must be submitted to Owner a minimum of 4 business days prior to the project start date.
   2. The responsibility of locating existing Owner owned utilities within the project limits shall be transferred to the Contractor after initial locating has been completed by the Owner until final completion.
   3. Contractor shall be responsible for locating all newly installed public utilities installed within the project limits until final completion.
   4. Locate requests within the project limits received by the Owner will be forwarded to the Contractor's representative responsible for coordinating locate requests within the project limits by email. Confirmation of receipt of the locate ticket must be sent by the Contractor's representative back to the Owner within 2 hours of Owner sending the locate request to the Contractor's representative.
   5. The Contractor shall be responsible for repairing any damage as the result of improperly located or unmarked public utilities within the project limits. The repair must be completed in accordance with the project requirements and to the satisfaction of the Engineer. This work shall be considered incidental.
   6. Owner requires a 48-hour notice for all utility interruptions.

E. Coordinate the relocation or protection of all existing facilities. Any costs for such Work shall be the responsibility of the Contractor.

1.05 PERMITS

A. Apply for, obtain, and comply with the provisions of the following permits, which the Owner will waive the permit application fee:
   1. City of Cottage Grove Right-of-Way Permit

B. Comply with the stipulations of the following permits, which have been applied for and will be furnished by the Owner.
   1. The following will be furnished on public projects only:
      a. Minnesota Pollution Control Agency (MPCA) Permit for Sanitary Sewer Extensions.
      b. Minnesota Department of Health (MDH) Permit for Water Main Extensions.
      c. MPCA Stormwater Discharges Associated With Construction Activities NPDES General Permit.

C. Apply for, obtain, and comply with other permits, licenses, and approvals which may be required for the Project.


© 2026 City of Cottage Grove, Minnesota

1.06 SURVEYING AND CONSTRUCTION OBSERVATION

A. Provide Engineer a minimum of 48-hour notice in advance of the need for establishing lines, grades, measurements, grade checks, and observation of Work.

B. Engineer will furnish a Resident Project Representative.

C. The Contractor is responsible for:
   1. Grades and elevations for pedestrian ramps.

1.07 PROJECT MEETINGS

A. Administrative Requirements:
   1. Project Superintendent or persons designated by the Contractor to attend and participate in the Project meetings shall have all required authority to commit the Contractor to solutions agreed upon in the Project meetings.
   2. Engineer will set the time, sites, and prepare the agenda for the meetings.
   3. Engineer will prepare meeting minutes and distribute 1 copy to Contractor. Notify Engineer of inaccuracies or discrepancies in the meeting minutes within 5 calendar days of receipt of the minutes.
   4. The attendance and cooperation of subcontractors and suppliers may be required.

B. Preconstruction Conference:
   1. Provisions for the Preconstruction Conference are set forth in the General Conditions.
   2. Requirements for preconstruction submittals are set forth in the General Conditions. Submittal procedures shall be consistent with Section 01 33 00.

C. Progress Meeting Procedures:
   1. Weekly Status Meetings will be held during weeks when construction activity is occurring on the Project. The meetings will take place at Cottage Grove Engineering and Utility Building or another location as agreed to at the preconstruction meeting. Day and time will be determined at the preconstruction meeting. If no Work is occurring, no meeting will be required:
      a. Weekly Status Meetings are anticipated to be 30 to 60 minutes in length.
      b. Furnish a detailed schedule of work for the next two weeks as well as provide an update on construction activity from the previous week for the purpose of allowing the City to provide information on its website as well as communicate to residents, businesses, or other entities impacted by the work.
      c. Provide copies of erosion control inspections completed during the previous week.
      d. Developers, private utilities, and others may attend to communicate Project issues.

**PART 2 PRODUCTS**

Not Used.

**PART 3 EXECUTION**

Not Used.


© 2026 City of Cottage Grove, Minnesota

**END OF SECTION**


© 2026 City of Cottage Grove, Minnesota

# SECTION 01 33 00

# SUBMITTAL PROCEDURES

## PART 1 GENERAL

1.01 SUMMARY

A. Section Includes:
   1. General procedures and requirements for submittals during the course of construction.

1.02 PRICE AND PAYMENT PROCEDURES

A. Measurement and Payment:
   1. All Work and costs of this Section shall be incidental to the Project and included in the Total Base Bid.

1.03 SEQUENCING AND SCHEDULING

A. Schedule submittals consistent with the Contractor's schedule of shop drawings.

## PART 2 PRODUCTS

Not Used.

## PART 3 EXECUTION

3.01 CONSTRUCTION SCHEDULE

A. Submit preliminary schedule and progress schedule consistent with the General Conditions.

B. Prepare schedules on 11 inch by 17 inch sheets showing overall sequence of construction. Organize the schedule by work activity. Identify separate stages of each work activity:
   1. List work items in chronological sequence. Show beginning and completion dates of each activity. Include all activities with an estimated duration of 3 days or longer.
   2. Format schedule as a horizontal bar chart. Provide separate bars for each activity or trade.
   3. Provide space for revisions and notations.
   4. Identify interrelations between activities.
   5. Identify critical path of tasks to be performed.
   6. Include estimated times for preparation of submittals by Contractor, processing and review of submittals by Engineer, fabrication, delivery, installation, testing, start-up, instruction of Owner, and clean-up.

C. As Work progresses, revise, update, and resubmit an overall construction schedule as requested by Owner or Engineer. At a minimum, update schedule with each Application for Payment. Show all activities started or finished since previous schedule was submitted and show percentage of completion for each activity.


© 2026 City of Cottage Grove, Minnesota

## 3.02 EMERGENCY CONTACT LIST

A. Before any Work at the Site is started, submit a typed list on 8.5 inch by 11 inch paper outlining 24 hour on-call contacts for the Project. This list shall include the Contractor's safety representative, Contractor's locating representative, key representatives from the Contractor, subcontractors, and suppliers. Include the following information for each contact:
   1. Company name.
   2. Contact person(s).
   3. Local and mobile phone numbers.

## 3.03 SHOP DRAWINGS AND MANUFACTURERS' INFORMATION

A. Conform to the requirements of the General Conditions, except as modified herein.

B. The minimum sheet size shall be 8.5 inches by 11 inches. Non-legible copies will not be reviewed.

C. Submit a minimum of 3 copies of shop drawings, plus the quantity of copies the Contractor wants returned, or submit electronically. Each copy shall contain the following information:
   1. Date of submission and date of any previous submittals.
   2. Project Title.
   3. Names Of: Contractor, subcontractor, supplier, and manufacturer.
   4. Identification of product and Specification Section number.
   5. Identification of revisions from previous submittals.

D. Engineer's review will be in conformance with the requirements of the General Conditions, except as modified herein.

E. Engineer will stamp shop drawings and indicate requirements for Contractor's review or re-submittal as follows:
   1. "Approved" – Appears that items covered by the submittal will, after installation or incorporation into the Work, conform to the Contract Documents and appears to be compatible with the design concept of the completed Project as a functioning whole as indicated by the Contract Documents.
   2. "Approved as Noted" – Appears that items covered by the submittal will, after installation or incorporation into the Work, conform to the Contract Documents and appears to be compatible with the design concept of the completed Project as a functioning whole as indicated by the Contract Documents, except as noted by Engineer.
   3. "Revise and Resubmit" – Appears that items covered by the submittal will not, after installation or incorporation into the Work, conform to the Contract Documents and will not be compatible with the design concept of the completed Project as a functioning whole as indicated by the Contract Documents. Work cannot proceed until the submittal is revised and resubmitted conforming to the re-submittal procedures described in the General Conditions.
   4. "Rejected" – Work covered by the submittal is not complete or it appears that items covered by the submittal will not, after installation or incorporation into the Work, conform to the Contract Documents and will not be compatible with the design concept of the completed Project as a functioning whole as indicated by the Contract Documents. Contractor shall conform to the re-submittal procedures described in the General Conditions.


© 2026 City of Cottage Grove, Minnesota

3.04 TEST REPORTS

A. Submit copies of all inspections, tests, and approvals required in the Specifications.

3.05 MATERIAL AND SAFETY DATA SHEETS

A. Furnish Owner with current copies of Material Safety Data Sheets for all chemicals and products on Site.

**END OF SECTION**


© 2026 City of Cottage Grove, Minnesota

This Page Left Blank Intentionally

# SECTION 01 40 00

# QUALITY REQUIREMENTS

## PART 1 GENERAL

1.01 SUMMARY

A. Section Includes:
   1. Information required for conformance to regulatory requirements.
   2. Quality assurance.
   3. Procedures to measure and report the quality and performance of the Work.

1.02 PRICE AND PAYMENT PROCEDURES

A. Measurement and Payment:
   1. All Work and costs of this Section shall be incidental to the Project and included in the Total Base Bid.

1.03 REFERENCE STANDARDS

A. Whenever reference is made to the Minnesota Department of Transportation Specifications, such reference shall mean “Standard Specifications for Construction” 2025 Edition (MnDOT Spec.) and all subsequent revisions and supplements. The word “Engineer” is understood to refer to the Engineer for the Owner.

1.04 SUBMITTALS

A. Prior to start of Work, submit testing laboratory name for various specified tests for approval by Engineer.

B. Laboratory test results or analysis.

C. Manufacturer’s certificates of quality control or performance.

1.05 WORKMANSHIP

A. Comply with industry standards of the region, except where more restrictive tolerances or specified requirements indicate more rigid standards or more precise workmanship.

1.06 TESTS AND INSPECTIONS

A. Conform to the requirements of the General Conditions, except as modified herein.

B. Notify Engineer 48 hours prior to expected time for operations requiring tests and inspections.

C. Provide incidental labor and facilities to obtain and handle samples at Site or source, transport samples to laboratory, and facilitate tests and inspections for storing and curing of test samples.


© 2026 City of Cottage Grove, Minnesota

D. On public projects, Owner shall pay for all required tests except as indicated in the Specifications:
   1. If, under test, any portion of the work fails to meet contract requirements and is altered, renewed, replaced, tests on that portion so altered, removed, replaced, together with portions of the work as are affected thereby, shall, if so required by Engineer, be repeated within reasonable time and in accordance with the specified conditions and the Contractor shall reimburse Owner for incurred costs of all subsequent tests to ensure compliance.

E. Notify Engineer of pit and scale location and other correlated items prior to beginning Work.

F. Following substantial completion of the project and in accordance with Standard General Conditions of the Construction Contract, the Engineer and Owner will perform a Final Inspection of the work performed under the contract. Based on that Inspection 1 initial Inspection Notice Report (INR) will be prepared. Contractor shall notify Engineer when items listed in INR have been completed. The Engineer will inspect Contractor's work a second time to verify the items in the initial INR have been completed. If there are items still unacceptable to the Owner/Engineer, a second INR will be prepared. All costs for Owner's/Engineer's time to prepare the second and, if needed, subsequent INRs and to verify that the work has been completed will be deducted from payments to the Contractor.

1.07 LABORATORY REPORTS

A. After each inspection and test, submit 3 copies of Laboratory Report to Engineer.

B. Include: Date issued, Project title and number, name of inspector, date and time of sampling or inspection, identification of product and Specifications Section, location in the Project, type of inspection or test, date of test, results of tests, and conformance with Contract Documents.

1.08 LABORATORY RESPONSIBILITIES

A. Test samples and perform field tests.

B. Provide qualified personnel. Cooperate with Engineer and Contractor in performance of services.

C. Ascertain compliance with the requirements of the Contract Documents.

D. When requested by Engineer, provide interpretation of test results.

1.09 LIMITS ON TESTING LABORATORY AUTHORITY

A. Laboratory may not release, revoke, alter, or enlarge on requirements of Contract Documents.

B. Laboratory may not approve or accept any portion of the Work.

C. Laboratory may not assume any duties of Contractor.

D. Laboratory has no authority to stop Work.


© 2026 City of Cottage Grove, Minnesota

1.10 MANUFACTURER'S CERTIFICATES

A. If requested by Engineer, submit manufacturer's certificate with shop drawings certifying that products meet or exceed specified requirements executed by responsible officer.

1.11 MANUFACTURER'S FIELD SERVICES

A. Provide qualified representative to observe field conditions; conditions of surfaces and installation; quality of workmanship; start-up of equipment; and test, adjust, and balance of equipment.

1.12 RIGHT OF REJECTION

A. The Engineer, acting for the Owner, shall have the right, at all time and places, to reject any articles or materials to be furnished hereunder which in any respect, fail to meet the requirements of these specifications, regardless of whether the defects in such articles or materials are detected at the point of manufacture or after completion of the work at the site. If the Engineer or RPR, through an oversite or otherwise, has accepted materials or work which is defective or which is contrary to the specifications, such material, no matter in what stage or condition of manufacture, deliver, or erection may be the Engineer for the Owner.

**PART 2 PRODUCTS**

NOT USED.

**PART 3 EXECUTION**

NOT USED.

**END OF SECTION**


© 2026 City of Cottage Grove, Minnesota

This Page Left Blank Intentionally

# SECTION 01 50 00

# TEMPORARY FACILITIES AND CONTROLS

## PART 1 GENERAL

1.01 SUMMARY

A. Section Includes:
   1. Temporary utilities and miscellaneous temporary facilities required during construction.

B. Products furnished but not installed under this Section or products installed but not furnished under this Section.

C. Related Sections:
   1. Section 01 33 00 - Submittal Procedures.
   2. Section 33 10 00 - Water Utilities.
   3. Section 33 14 18 - Water Utility Service Laterals.

1.02 PRICE AND PAYMENT PROCEDURES

A. Measurement and Payment:
   1. Mobilization: Measurement is Lump Sum. This will be considered payment in full for all work and costs of this Bid Item for the entire Project. Partial payment of the Lump Sum Bid Item "Mobilization" will be made using a percentage based on the table below. If the contract unit price for mobilization exceeds 5 percent of the total contract amount, the owner may withhold (on any partial estimate) the portion in excess of 5 percent until the Contractor earns at least 95 percent of the original contract amount.

| | Cumulative Percent of Mobilization Item Paid |
|---|---|
| First Partial Payment | 50 |
| Percent of original contract amount earned - 25 | 70 |
| Percent of original contract amount earned - 50 | 90 |
| Percent of original contract amount earned - 100 | 100 |

   2. Traffic Control: Measurement is Lump Sum. This shall be considered payment in full for all labor, equipment, and materials associated with the required Traffic Control devices for vehicular and pedestrian traffic for the entire Project. This Bid Item shall include but not be limited to furnishing, installing, maintaining, relocating, and ultimate removal of the Traffic Control devices used over the duration of the Contract or as directed by the Engineer. Also included within this item is temporary pavement markings and detours as shown in the Drawings. Partial payment of the Lump Sum Item "Traffic Control" will be made using a percentage based on the table below. If the contract unit price for Traffic Control exceeds 5 percent of the total contract amount, the owner may withhold (on any partial estimate) the portion in excess of 5 percent until the Contractor earns at least 95 percent of the original contract amount.


© 2026 City of Cottage Grove, Minnesota

| | Cumulative Percent of Traffic Control Item Paid |
|---|---|
| First Partial Payment | 50 |
| Percent of original Contract amount earned - 25 | 70 |
| Percent of original Contract amount earned - 50 | 90 |
| Percent of original Contract amount earned - 100 | 100 |

3. All other Work and costs of this Section shall be incidental to the Project and included in the Total Base Bid.

1.03 REFERENCES

A. Minnesota Department of Transportation "Standard Specifications for Construction", 2025 Edition (MnDOT Spec.).

B. The Minnesota Manual on Uniform Traffic Control Devices (MN MUTCD), including the Field Manual on Temporary Traffic Control Zone Layouts - Latest edition.

C. Minnesota Department of Transportation Traffic Engineering Manual.

1.04 SUBMITTALS

A. Construction Staging Plan consistent with Section 01 33 00, including the following information:
   1. Sequence of construction and traffic control.
   2. Streets closed or restricted during any stage of construction.
   3. Provisions for routing any detoured traffic as permitted.
   4. Specific signs, striping, and other traffic control devices to be utilized.

B. Traffic Management Plan consistent with Section 01 33 00, including the following information:
   1. Haul and access routes.
   2. Permits or applications required by local authorities.
   3. Temporary facilities required.
   4. Names, addresses, and phone numbers of at least 3 individuals responsible for placement and maintenance of traffic control devices. At least one of these individuals shall be "on call" 24 hours per day, 7 days per week during the time any traffic control devices furnished and installed by the Contractor are in place.

**PART 2 PRODUCTS**

2.01 TRAFFIC CONTROL CHANGE

A. Sign:
   1. Conform to MN MUTCD 6F30 - W3-X5, except as modified herein:
      a. Minimum dimensions of 36 inch X 36 inch.
   2. Sign material meeting the requirements of Section 34 41 05.


© 2026 City of Cottage Grove, Minnesota

B. High Level warning device:
   1. Conform to MN MUTCD 6F62 Orange flag, min 16 square inches surface area.
   2. Minimum of two flags per sign.

**PART 3 EXECUTION**

3.01 MOBILIZATION

A. Move personnel, equipment, materials, and all other items required to complete the Work at the Site.

B. Establish Contractor offices, building, or other facilities necessary for Work on the Project.

C. Temporarily hold or relocate utilities and any miscellaneous structures, such as signs, power poles, guy wires, and mailboxes disturbed.

3.02 TEMPORARY WATER FOR CONSTRUCTION AND USE OF OWNER'S WATER SYSTEM

A. Regulations of the Minnesota Department of Health as adopted by the City of Cottage Grove prohibits the indiscriminate use of the City's water hydrants by persons other than City personnel.

B. Contractors are not allowed to operate or connect to a City hydrant for water usage without a Hydrant Use Permit. A Hydrant Use Permit is available at the Utility and Engineering Building, 10875 Ideal Avenue South. Office hours 8 A.M. to 4 P.M. A deposit is required for the use of a hydrant meter.

C. No direct connection will be allowed from a hydrant to a tank truck or watering vehicle or hose. Contractor must provide a backflow preventer or fill pipe air gap equal to 2 times the diameter of the fill pipe or hose.

D. Clean and thoroughly disinfect all containers and testing equipment to eliminate the possibility of contamination of the system.

E. Disinfect water mains and services consistent with Section 33 10 00 and Section 33 14 18.

F. The following is a summary of the procedural requirements for installation and testing of City water mains and services.

G. Phase 1: Utility projects consisting of sanitary sewer, water main, and storm sewer improvements:
   1. Step 1 - Open Connections to Existing Mains and/or Fittings:
      a. Contractor schedules shutdown and contacts City Water Department a minimum of 48 hours prior to performing Work. At this time, the Contractor is responsible to notify the City Fire Department of the intended shutdown. Contractor must abide with specific requirements for the Project that limits or defines certain hours that the shutdown maybe be performed.
      b. If water service is to be turned off, the Contractor is responsible to provide written notification to all affected property owners and customers at least 48 hours prior to the actual loss of service.


© 2026 City of Cottage Grove, Minnesota

c. The City Water Department must open and close the existing valves for this part of the operation. If required, the City will be responsible for flushing the existing mains after the connection is completed; however, the Contractor shall assist the City as necessary.

2. Step 2 - Filling Newly Installed Water Mains Prior to Service Installation:
   a. Contractor contacts City Water Department a minimum of 48 hours prior to performing Work. Engineer reviews with the Contractor the sequence of lines to be filled and which hydrants to open to eliminate trapped air. Taps of 1 inch diameter may be required in dead end plugs to relieve air from the system as part of the Project.
   b. After the Contractor notifies the City Water Department, the Contractor and Engineer Representative operate valve to slowly fill the mains.
   c. When filling water mains 12 inches and larger, the City Water Department must be present.
   d. Contractor is responsible to verify that all existing valves are off and that untested water is not able to enter the City system. The Contractor is further responsible to have all new valves in their system open to assure that all new mains are filled but that the water is contained within the new system.
3. Step 3 - Water Service Installation:
   a. All corporation stops shall be tapped with the main under water pressure.
   b. Contractor is responsible to open all corporation stops and curb stops to bleed air and flush any dirt from the copper water line. Afterwards, the Contractor shall close the curb stop and shall crimp the end of the short tail section.
   c. During the service installation activity, the Contractor opens and closes existing main valve as necessary to maintain pressure for tapping and bleeding service lines only. The Engineer Representative must be present at the time the Contractor re-pressurizes the mains.
   d. Engineer checks and verifies that existing valve is opened and closed promptly; however, the Contractor is responsible for this procedure.
4. Step 4 - Pressure and Conductivity Testing:
   a. Pressure and conductivity testing shall be performed as per the Contract Specifications and shall be performed in that order to assure mains are full of water for conductivity testing.
   b. All service lines shall be in place and on before the pressure test is administrated.
   c. Document and provide the City with static pressure readings obtained during the pressure testing procedure.
5. Step 5 - Flushing of Water Mains for Bacteria Test:
   a. Contractor contacts City Water Department a minimum of 48 hours prior to performing Work. Engineer reviews with Contractor the sequence of lines and valves to operate to thoroughly flush system.
   b. After notifying the City, the Engineer Representative and Contractor operate existing valve/valves for flushing.
   c. City Water Department must be present when flushing water mains 12 inches and larger.
   d. Contractor shall notify the Engineer for the scheduling of water sample for bacteria test, which shall be pulled and tested by a certified independent testing firm. The Contractor will be required to assist the Engineer to operate valves for sampling if necessary.
6. Step 6 - Turning On New Mains into Existing Water System:
   a. All testing complete - pressure, conductivity, and bacteria accepted by the Engineer.


© 2026 City of Cottage Grove, Minnesota

b. Engineer completes required documentation notifying Public Works Department, Engineering Department, and Building Inspection Department that the new system is turned on or can be scheduled to be turned on.
c. Engineer contacts the City Public Works Department which must be present to turn on the new system for mains 12 inches and larger. System shall be turned on within 14 calendar days of completion of passing tests.
d. Engineer and Contractor together turns on the new system for mains smaller than 12 inches. System shall be turned on within 14 calendar days of completion of passing tests.

H. Phase 2: Street Construction, Restoration, and Landscaping Work:
1. Contractors, subcontractors, builders, or developers are not allowed to operate or connect to a City's hydrant for water usage without a hydrant use permit.
2. The sources of City water for street construction, restoration, and landscaping work is as follows:
a. Public Works will designated a hydrant for the Contractors as part of Hydrant Use Permit process.
b. If hydrant meters are not available or if the City determines the Contractors request for water warrants it, the City will designate an existing hydrant for the Contractors use. The same hydrant use permit, deposit, and water use charge will be applied, as required for the hydrant meter.
c. Prices and deposit amounts may change without notice.

I. Water Restrictions: Contractor may be required to use non-potable water during a drought period. Owner will assist Contractor in locating source.

3.03 CONSTRUCTION FACILITIES

A. Sanitary Facilities:
1. Comply with all governing regulations, including safety and health codes, for sanitary fixtures and facilities.
2. Provide self-contained toilet units, or water and sewer connected temporary toilet facilities, consistent with governing regulations. Contractor may not use Owner's toilet facilities.
3. Provide and maintain adequate supply of toilet tissue, paper towels, paper cups, and similar disposable materials appropriate for each facility. Provide appropriate covered waste containers for used material.

3.04 TEMPORARY CONSTRUCTION

A. Bypass Pumping:
1. All sanitary flows shall be pumped around areas with no spillage allowed.
2. Any spill needs to be reported as required by law.

B. Pumping and Dewatering:
1. Provide draining, pumping, dewatering, and cleaning operations necessary to complete the Work.
2. Provide all necessary pumping to remove all surface water and groundwater from structures as required for the Work. Provide erosion control measures for discharge of water.
3. Protect Site and adjacent property to avoid damage.


© 2026 City of Cottage Grove, Minnesota

## 3.05 TRAFFIC CONTROL

A. General
   1. Provide and maintain all traffic control devices in accordance with the approved Construction Staging Plan. All traffic control devices and other protective measures shall conform to MN MUTCD, including its supplements and part IV, “Field Manual on Temporary Traffic Control Zone Layouts”, the “Guide to Establishing Speed Limits in Highway Work Zones”, and, if any, traffic control layouts and typical traffic control layouts in the Plans.
   2. Flaggers are required to protect construction vehicles during unloading of construction materials. Conform to the requirements of the MN MUTCD, the Flagging Handbook included in the Field Manual for Temporary Traffic Control Zone Layouts, and the following:
      a. While on duty flaggers shall wear hard hats and reflectorized florescent orange vests;
      b. Flaggers shall be fully clothed when on duty with shirt or blouse, slacks or trouser, and sturdy shoes.
   3. Do not park vehicles as to obstruct a traffic control device. The parking of workers’ vehicles will not be allowed within the Project limits, unless so approved by the Engineer.
   4. Do not store materials or equipment within 30 feet of through traffic, unless approved by the Engineer. If materials or equipment must be stored within 30 feet of through traffic, the Contractor shall provide barricades or barriers, as directed by the Engineer, to warn and protect traffic.
   5. Conduct Work in a manner that will allow access to all properties within and adjacent to the Project by fire, police, and emergency vehicles.
   6. Maintain all unpaved surfaces. The surface shall be watered and bladed as directed by the Engineer.
   7. Remove traffic control devices at the conclusion of the Work
   8. Protect work at all times, including during structure adjustment work.
   9. Provide access for emergency vehicles and busses to all residences at all times.

B. Traffic Control Devices:
   1. Daily inspect and insure that all traffic control devices required by the construction are in accordance with the MN MUTCD. Any discrepancy between the actual devices in use and the required devices shall be immediately rectified. At least 1 nighttime inspection shall be made each week.
   2. Respond with sufficient personnel, equipment, and/or materials to any request from the Engineer to improve or correct the usage of traffic control devices on or related to this Project within 1 hour of the time of notification or be subject to a $100 per hour deduction from the time of notification for non-attention to protect security and safety.
   3. Keep all traffic control signs and devices in a legible condition. This shall include but not be limited to removing grime and dust deposited on any device by traffic, natural causes, or when requested by Engineer.
   4. Store at least 10 extra Type 1 barricades with flashers, 5 extra Type III barricades, and 10 extra drums, at a convenient location within the Project limits for use in an emergency, as approved by the Engineer. No direct compensation will be made to the Contractor for furnishing and erecting these traffic control devices.

C. Place traffic control with flashers around areas disturbed by removal and replacement of utility structures and concrete curb and gutter:


© 2026 City of Cottage Grove, Minnesota

1. Place at least one Type 1 barricade with flasher or barrel with flasher per panel of curb removed.

D. Establish and maintain advisory signs at all entrances to Site:
   1. Signs shall state “Construction Zone” and “Proceed at Own Risk” in black letters on orange background.

E. Prior to disturbing any existing trail or sidewalk, place Type 3 barricade with “Sidewalk Closed” sign on each side of the disturbed area.

F. Closure of a roadway using Type III barricades will require a sufficient number of barricades to span the entire roadway width, at the discretion of the Engineer.

3.06 TRAFFIC CONTROL CHANGE

A. General
   1. Advanced warning signage must be in place prior to changes in traffic control, including removal of existing traffic control signs (e.g. stop, yield).
   2. Advanced warning signs must be located behind the curb.
   3. Advanced warning signage must remain in place for 60 days after change in traffic control and removed within 65 days of change in traffic control.
   4. After removal complete restoration in accordance with section 32 92 00.

3.07 TEMPORARY BARRIERS AND ENCLOSURES

A. Temporary Barriers:
   1. Provide temporary covers, enclosures, markers, and barriers as necessary to protect Work.
   2. Promptly repair any damage to the Site caused by removal of temporary fencing, including postholes. During removal, at no time shall the Work remain unattended if a dangerous condition exists because of incomplete removal or Site requiring repair.

B. Temporary Fence:
   1. Install as shown on the Drawings.
   2. Maintain and repair fence throughout the duration of the Project.
   3. Provide Owner and Engineer with keys or combinations to any locks that may be used to secure fencing gates.

3.08 RESTRICTIONS

A. Temporary stockpiling of materials or debris on any City street overnight is not allowed. Proper traffic control is required for stockpiling during the day.

B. Overnight parking of equipment will be allowed along city streets. Overnight parking of equipment must meet the following requirements or be subject to Penalty.
   1. Proper traffic control is required.
   2. Equipment left onsite must be utilized for construction purposes within the project limits a maximum of 48 hours from time of last use unless otherwise approved by Engineer.
   3. Equipment left onsite must be parked at locations that will not restrict access to driveways or access for emergency vehicles.


© 2026 City of Cottage Grove, Minnesota

4. All overnight parking locations must be approved of by Engineer.

**END OF SECTION**


© 2026 City of Cottage Grove, Minnesota

# SECTION 01 57 13

# TEMPORARY EROSION AND SEDIMENT CONTROL

## PART 1 GENERAL

1.01 SUMMARY

A. Section Includes:
   1. Managing storm water runoff and other Project related water discharges to minimize sediment pollution during construction.

1.02 PRICE AND PAYMENT PROCEDURES

A. Measurement and Payment:
   1. Payment at the Bid Unit Price will be considered compensation in full for all Work necessary to complete the Bid Item in full, including installation, maintenance, sediment removal, repairs, and removals.
   2. Measurement will be based upon the units as listed below for Bid Items removed, abandoned, or salvaged complete as specified. No measurement will be made of any removals that are not required. The actual quantity installed multiplied by the appropriate Bid Unit Price will be compensation in full for all Work and costs of the following Bid Items. 80-percent partial payment will be made upon installation and 20-percent payment will be made upon removal and restoration:
      a. Silt Fence: Payment will be by type. Measurement will be by the linear foot along the base of the fence, from outside to outside of the end posts for each section of fence.
      b. Flotation Silt Curtain: Payment will be by type. Measurement will be by linear foot installed.
      c. Storm Drain Inlet Protection: Measurement will be per each, according to type furnished. Payment shall include installation and maintenance, removal, including cleaning and reinstallation.
      d. Temporary Construction Entrance: Measurement will be by the cubic yard of material furnished and installed on the Project.
      e. Rolled Erosion Prevention Products: Payment will be by type installed. Measurement will be by square yard.
      f. Mulch: Measurement will be by the acre of material installed.
      g. Temporary Hydraulic Matrix: Measurement will be by the acre of material installed.
      h. Filter Berm: Payment will be by type. Measurement will be by the linear foot.
      i. Sediment Control Logs: Payment will be by type. Measurement will be by the linear foot.
      j. Sediment Trap: Shall be considered incidental to the Project.
      k. Temporary Slope Pipe: Measurement will be by the linear foot. Payment shall include rip rap used to provide an outlet.
      l. Bale Barrier: Measurement will be by the linear foot.
      m. Flocculants and Polyacrylamides: Measurement will be by dry weight in pounds based on tickets submitted to the Engineer.
      n. Flocculant Sock: Measurement will be by the each.


© 2026 City of Cottage Grove, Minnesota

o. Rapid Stabilization Methods:
   1) Method 1 and 2: Measurement will be by the acre.
   2) Method 3: Measurement will be by the 1,000 gals.
   3) Method 4: Measurement will be by the square yard.

3. Bid Form for Street Sweeper With Operator and Skidsteer (Bobcat) With Operator: Measurement shall be by the hour of equipment use, based on the actual amount of time spent cleaning street surfaces. However, if the Contractor is careless in their construction operations, they will be required to clean and sweep streets at their own expense. Payment at the Unit Price shall be considered complete compensation for all work associated with the cleaning, including water as directed by Engineer, and disposal of collected materials:
   a. Anticipate multiple mobilizations to perform this work.
4. Erosion Control Supervisor throughout the duration of the project: No measurement will be made of the various duties performed or of the number of hours required, but all such work will be construed to be included in the lump sum payment, half to be paid after 50-percent of the project is complete and the remainder at closeout of the project. The bid item is for providing an Erosion Control Supervisor to perform all duties as described in Paragraph 1.05.A.
5. Water for Dust Control: Measurement will be per 1,000 gallons (MGAL) applied. Payment will constitute compensation in full for all Work and costs to furnish and apply the water. This Bid Item is intended to pay for water used for dust control only and only at those times that it is requested by either the Engineer or Owner.
   a. Water used for the construction of the streets will be considered incidental to the Project.
6. When the contract Bid Item requires maintenance, partial payment for installation will be made no greater than 50-percent of the contract unit price. The remaining partial payment will be made after maintenance and final acceptance by the Engineer.
7. All other Work and costs of this Section shall be incidental to the Project and included in the Total Base Bid.

B. Related Sections:
   1. Section 01 33 00 - Submittal Procedures.
   2. Section 32 92 00 - Turf and Grasses.

1.03 REFERENCES

A. Minnesota Department of Transportation “Standard Specifications for Construction” 2025 Edition (MnDOT Spec.):
   1. 1717 - Air, Land, and Water Pollution.
   2. 2573 - Storm Water Management.
   3. 2575 - Establishing Vegetation and Controlling Erosion.
   4. 3733 - Geosynthetic Materials.
   5. 3882 - Mulch Material.
   6. 3884 - Hydraulic Erosion Control Products.
   7. 3885 - Rolled Erosion Prevention Products.
   8. 3886 - Silt Fence.
   9. 3887 - Flotation Silt Curtain.
   10. 3890 - Compost.
   11. 3892 - Temporary Slope Pipe Drain.


© 2026 City of Cottage Grove, Minnesota

12. 3897 - Sediment Control Log.
13. 3898 - Flocculants.
14. 3911 - Calcium Chloride.
15. 3912 - Magnesium Chloride Solution.
16. MPCA's NPDES General Stormwater Permit for Construction Activity.

1.04 SUBMITTALS

A. MPCA's NPDES General Stormwater Permit for Construction Activity (MN R100001):
   1. NPDES permit inspection log resulting from weekly Site inspections will be prepared by the Contractor and submitted to the Engineer on a weekly basis.
   2. Amendments to the Stormwater Pollution Prevention Plan (SWPPP) for the Project.
   3. Completed form for MPCA's Notice of Termination, in conjunction with Owner.
   4. Provide documentation of certifications for Erosion Control Supervisor and Certified Installers that will be on this project.

B. Contractor Prepared Schedules and Plans:
   1. Erosion and Sediment Control Schedule: Conforming to MnDOT Spec. 1717.2.B and submitted each week that construction is active.
   2. Site Management Plans in conformance with MnDOT Spec. 1717.2.C:
      a. Submitted when requested by the Engineer.
      b. Site plans prepared by Contractor will indicate Contractor operations, erosion and sediment control measures, and a schedule of starting and completion times.

C. Certification and Sampling:
   1. Furnish a manufacturer's certification stating that the material supplied conforms to the requirements of this Section. The certification shall include or have attached typical results of tests for the specified properties, representative of the materials supplied.

1.05 QUALITY ASSURANCE

A. Erosion Control Supervisor: Provide an Erosion Control Supervisor with a valid Minnesota Construction Site Management certification, or approved equal, authorized to represent the Contractor on matters pertaining to Erosion and Stormwater Management, work in public waters and be available to the work site within 24 hours of initial disturbance and daily when work is taking place until final stabilization. The following list describes the duties of the Erosion Control Supervisor:
   1. Implements the quality control program.
   2. Ensures proper installation, functionality, and maintenance, clean-up, and removal of all erosion and sediment control Best Management Practices (BMP's) and in accordance with manufacturer's recommendations.
   3. Implements the erosion and sediment control schedule.
   4. Coordinates the work of subcontractors and ensures the full execution of erosion and sediment control measures for each operation and stage of the work.
   5. Oversees the work of subcontractors and ensures the subcontractors undertake erosion and sediment preventative measures at each stage of the work.
   6. Prepares the required weekly erosion control schedule and inspections with the dates and times.


© 2026 City of Cottage Grove, Minnesota

7. Attends construction meetings to discuss the erosion control schedule and inspections.
8. Prepares the erosion and sediment control Site Management Plans as required by the contract or as directed by the Engineer.
9. Provides for erosion and sediment control methods for temporary work not shown on the plans.
10. Ensures effective preventative BMP's are in place, recommends changes to the SWPPP for the Engineer's approval, and amends the SWPPP to document changes.
11. Ensures acquisition of and compliance with applicable permits for borrow pits, dewatering, and temporary work in rivers, lakes, and streams.
12. Ensures the full installation of erosion and sediment control before suspension of the work.
13. Coordinates with federal, state, and local regulatory agencies on resolution of erosion and sediment control issues resulting from the work.
14. Ensures that proper clean-up occurs from vehicle tracking on paved surface locations where sediment leaves the project.
15. Ensures daily compliance with environmental laws, permits, and SWPPP narrative requirements.
16. Ensures the certification of installers for operations in accordance with Paragraph 1.05.B.

B. Certified Installers: Provide at least one certified installer with a valid certification obtained through the University of Minnesota Erosion Control Inspector/Installer Certification program, or approved equal to install or direct installation of erosion or sediment control practices as listed below:
   1. Seeding.
   2. Sodding.
   3. Mulching.
   4. Silt Fence or other perimeter sediment control device installations.
   5. Rolled Erosion Control Practices (RECP) installation.
   6. Hydraulic erosion control product installation.
   7. Silt curtain installation.
   8. Ditch check installation.
   9. Compost installation.

   If the Contractor fails to provide the required certified installer, the Engineer may reject the work as unauthorized.

C. If the Project disturbs 1 or more acres of total land area, Co-submittal with the Owner of a completed NPDES application form for the MPCA's General Stormwater Permit for Construction Activity and the appropriate fees to the MPCA is required. Engineer will complete the online application and fees will be paid as described in Section 01 31 00.

1.06 SEQUENCING AND SCHEDULING

A. Install sediment control measures prior to grading activities.

B. Schedule and coordinate the Work so that permanent erosion and sediment control BMPs, such as basin construction, rip rap placement, and permanent seeding, are directly incorporated into the supplement permanent erosion and sediment control BMPs with temporary BMPs. Place temporary BMPs when permanent erosion control cannot be achieved. Coordinate construction


© 2026 City of Cottage Grove, Minnesota

operations so that erosion and sediment control measures (permanent or temporary) are installed and maintained concurrently with the rest of the Work of the Project.

C. Coordinate and schedule the Work of subcontractors such that erosion and sediment control measures are fully executed for each operation and in a timely manner over the duration of the Project. Develop a chain of responsibility for all subcontractors and operators on the Project to ensure that permit provisions are adhered to.

D. Infiltration areas and constructed infiltration systems should not be constructed until the contributing drainage area and/or adjacent construction has been completely stabilized. When this timing of construction is not possible, ensure sediment from exposed soil areas of the Project does not enter into the infiltration area or system.

E. Stabilization timeframes shall conform to the NPDES General Stormwater Permit for Construction Activity.

F. Perform weekly and post-rainfall event inspections in accordance with the NPDES permit.
   1. Complete and submit the required weekly inspection log.

G. Prior to Project shutdown for the winter or other periods of a week or more, adequately protect Site from erosion and off site damage by covering exposed soils with mulch and establishing perimeter controls.

H. If the Contractor fails to install erosion or sediment measures, the Engineer may withhold payment from related work until the control measures are undertaken by the Contractor:
   1. When the Contractor fails to conduct the quality control program, does not conduct the inspection required in the NPDES permit, or fails to take action ordered by the Engineer to remedy erosion or sediment control problems, the Engineer shall issue a Written Order to the Contractor.
   2. Respond within 24 hours with sufficient personnel, equipment, materials, and conduct the required Work or be subject to a $1,000 per calendar day deduction for noncompliance.

I. Establish permanent turf in accordance with Section 32 92 00 to prevent excessive soil erosion.

J. Multiple mobilizations will be required for the various erosion and sediment control items.

K. Silt fence shall be removed prior to project closeout and final acceptance.

**PART 2 PRODUCTS**

2.01 SILT FENCE: Conform to MnDOT Spec. 3886.2.

A. Machine sliced in accordance with Standard Detail Plate ERO-1.

B. Heavy Duty in accordance with Standard Detail Plate ERO-3.

C. Delete MnDOT Spec. 3886.1. Pre-assembled (PA) silt fence.


© 2026 City of Cottage Grove, Minnesota

2.02 TEMPORARY CONSTRUCTION ENTRANCE

A. Construction Entrance: Conform to Standard Detail Plate ERO-12:
   1. Rock Entrance:
      a. 2 inches minimum clear/washed rock.
      b. Underlying Geotextile: Conform to MnDOT Spec. 3733, Type 5.
      c. Minimum Thickness of Rock Placed: 6 inches.
   2. Wood Slash Mulch Construction Entrance:
      a. Raw wood slash only. No chipped-up manufactured wood or chemically treated wood is allowed.
      b. Splinter material to an average approximate length of 6 inches with a maximum length of 20 inches. Bark and wood splinters less than 2 inches long shall not exceed 20 percent by mass of the material.
      c. Underlying Geotextile: Conform to MnDOT Spec. 3733, Type 5.
      d. Minimum Thickness of Mulch Placed: 18 inches.

2.03 MULCH: Conform to MnDOT Spec. 3882.

A. Type 1, clean grain straw unless specifically specified otherwise. Project specific, refer to MnDOT Spec. for options.

B. Hydraulic erosion control products may be used in lieu of mulch with the approval of the Engineer.

2.04 HYDRAULIC EROSION CONTROL PRODUCTS (HECPs)

A. Hydraulic Matrix:
   1. Mulch: Conform to MnDOT Spec. 3884.2.B.2.
   2. To be used as part of the Temporary Hydraulic Matrix Bid Item with no seed.

2.05 ROLLED EROSION PREVENTION PRODUCTS

A. Conform to MnDOT Spec. 3885.

2.06 STORM DRAIN INLET PROTECTION

A. Inlet protection for paved streets with concrete curb and gutter: The following methods are acceptable:
   1. Conform to the details on the Drawings.
   2. Catch Basin Inserts:
      a. Road Drain by Wimco, LLC (www.roaddrain.com), in accordance with Standard Detail Plate ERO-9, or approved equal.
      b. Filter bag insert subject to Site and approved by the Engineer.

B. Inlet protection for non-paved surfaces without curb or areas where vegetation will be established. The following methods are acceptable:
   1. Conform to the details on the Drawings.
   2. Silt fence box: conform to Standard Detail Plate ERO-7 and ERO-10, or approved equal.
   3. Sediment control inlet hat:


© 2026 City of Cottage Grove, Minnesota

4. InfraSafe Sediment Control Barrier by Royal Enterprises (http://www.royalenterprises.net/).
5. Rock filter: conform to Standard Detail Plate ERO-8.

2.07 SEDIMENT CONTROL LOGS:

A. Conform to MnDOT Spec. 3897.

2.08 FILTER BERMS

A. Conform to MnDOT Spec. 2573.3.F.4 and details in Drawings.

2.09 BALE BARRIERS

A. Conform to MnDOT Spec. 2573.3.C.

B. All bales shall be either bound with wire or tied with nylon string.

C. Hardwood stakes shall be 1-1/2 inches by 1-1/2 inches by 36 inches.

2.10 FLOTATION SILT CURTAIN

A. Conform to MnDOT Spec. 3887.

B. Curtain depth shall extend to the bottom of the water body.

2.11 DUST CONTROL

A. Water clear and free from suspended fine sediment.

2.12 TEMPORARY SLOPE PIPE DRAIN:

A. Conform to MnDOT Spec. 3892 and detail in Drawings.

2.13 TEMPORARY SEED

A. Conform to Section 32 92 00.

2.14 DEWATERING SEDIMENT CAPTURE

A. General – Sizing, configuration, capacity, and selection of dewatering sediment capture techniques shall be based on Site and flow conditions. Submit the means and methods for review by the Engineer. Sizing of the sediment capture systems will have to be adjusted such that the ultimate discharge water is not visibly different from the receiving water.

2.15 FLOCCULANTS:

A. Conform to MnDOT Spec. 3898.


© 2026 City of Cottage Grove, Minnesota

2.16 EQUIPMENT

A. Street sweeper with mechanism for picking up and containing sweepings. Power broom will not be allowed. The Street Sweeper shall have the minimum bristle length as recommended by the manufacture.

B. Skidsteer (bobcat) to assist in street sweeping.

**PART 3 EXECUTION**

3.01 GENERAL

A. Comply with all applicable laws, ordinances, regulations, permit requirements, orders and decrees pertaining to erosion/sediment control and stormwater discharge during the conduct of the Work.

B. Take necessary precautions against damage to the Project by action of the elements.

C. Implement the Project's NPDES Stormwater Pollution Prevention Plan (SWPPP) and take necessary actions to prevent off Site damage resulting from Work conducted on the Project or Project related stormwater runoff.

D. Minimize the amount of disturbed land that is susceptible to erosion at any time. Delineate areas not to be disturbed:
   1. Exclude vehicles and construction equipment from area not to be disturbed to preserve natural vegetation.
   2. Maintain and preserve riparian and naturally vegetated buffer strips (10 feet minimum distance) along water courses.

E. Restore all disturbed areas that have not had construction activity for more than 14 calendar days with temporary hydraulic matrix. All costs related to furnishing and installing the temporary hydraulic matrix will be considered incidental to the Project, unless a Bid Item has been provided for it and direction has been given by the Engineer.

F. Street sweeping operations must include the application of water to effectively remove fine materials from pavement areas, as directed by the Engineer. The appropriate amount of water shall be applied to eliminate dust as part of the sweeping operations.

3.02 INSTALLATION

A. General: Install temporary stormwater management and sediment control devices in conformance with the details, typical sections, and elevations shown on the Drawings.

B. The location of temporary stormwater and sediment control devices may be adjusted from that shown on the Drawings to accommodate actual field conditions and increase the effectiveness of the installation.


© 2026 City of Cottage Grove, Minnesota

C. Silt Fence: Conform to MnDOT Spec. 2573.3.B:
   1. Install in the locations shown on the Drawings using the machine sliced installation method, unless directed otherwise by the Engineer.
   2. Use additional measures, such as rock aggregate, placed along the base of the silt fence where the silt fence geotextile cannot be trenched in, i.e. tree roots, frost, bedrock.
   3. Use short sections of silt fence placed in J-hook patterns to:
      a. Supplement the perimeter silt fence at corner locations and areas where sediment deposition will occur. No more than 100 feet of silt fence shall be installed per 1/4 acre of drainage.
      b. Break up flow path along silt fence running across contours to be no more than 100 feet between hooks or as directed by the Engineer.
   4. Silt fence longer than 600 feet shall be constructed in separate independent units with each unit having a length less than 600 feet. Avoid splices whenever possible. If necessary, make splices at an opposing fence post and according to the manufacturer's specifications.

D. Temporary Construction Entrance:
   1. Install at locations shown on the Drawings.
   2. Construct construction entrance before grading begins on the Site.
   3. Inspect construction entrance daily for mud accumulation to minimize vehicle tracking of sediment onto public roadways. Remove fugitive rock or wood mulch from adjacent roadways daily.

E. Mulch:
   1. For seeded Sites, apply at a rate of 2 tons per acre (4,500 kg/ha).
   2. For unseeded Sites, apply at a rate of 2 to 3 tons per acre (4,500 to 6,700 kg/ha), covering the entire soil surface.
   3. Distribute mulch evenly by hand or machine and cover the exposed area to a uniform depth.
   4. Disk anchor in conformance to MnDOT Spec. 2575.3.D.
   5. Anchor mulch immediately to minimize loss by wind or water.

F. Temporary Hydraulic Matrix:
   1. Apply in conformance with Section 32 92 00 and MnDOT Spec. 2575.3.E, but without seed.

G. Slope (Cat) Tracking:
   1. Slope tracking consists of operating a dozer up and down slopes so that the cleats of the tracks create grooves perpendicular to the slope. By operating the dozer up and down, the soil surface is firmed and miniature interceptor checks are created.
   2. Required on all slopes equal to or steeper than 3:1 (H:V).

H. Rolled Erosion Prevention Products:
   1. Install immediately following seeding in accordance with MnDOT Spec. 2575.3.G, and as modified below.
   2. Install per Detail Plate ERO-5 and as shown on the Drawings.
   3. Raking or harrowing of soil/seed shall be done before installation of erosion control blanket.
   4. Install blanket parallel to the direction of flow.
   5. If permanent seeding is not available at the time of blanket installation, this material will have to be removed, re-seeded, and installed again as a permanent erosion control


© 2026 City of Cottage Grove, Minnesota

measure. If permanent seeding is available at the time of initial installation, a one-time proper installation is acceptable.

I. Storm Drain Inlet Protection:
   1. Provide effective storm drain inlet protection over the life of the Project until all sources with potential for discharging to inlets have been paved or stabilized.
   2. Place devices so that driving hazards or obstructions are not created. The devices must be cleaned out regularly and all devices must have an emergency overflow to reduce flooding potential.

J. Temporary Sediment Basins:
   1. Sediment basins shall be excavated as a first priority when grading begins on the Project. The location and outlet configuration are shown on the Drawings.

K. Temporary Sediment Traps:
   1. Temporary sediment traps are excavated in conjunction with other grading activities. Temporary traps are approximately 2 feet or less in depth with a length to width ratio of 1:2.
   2. Effectiveness of sediment traps can be increased by placing a rock weeper at the outlet.

L. Temporary Diversion Berm:
   1. Temporary diversion berm shall be installed at locations shown on the Drawings. The berm shall be located to minimize damage by construction operations and traffic.
   2. Temporary diversion berm shall be installed as a first step in the land-disturbing activity and must be functional prior or in conjunction with upslope land disturbance.
   3. The berm shall be adequately compacted to prevent failure.
   4. Temporary or permanent seeding and mulch shall be applied to the berm immediately following its construction.

M. Temporary Slope Pipe Drains:
   1. When temporary down drains are placed on fill slopes, a temporary earth berm or sandbag barrier shall be constructed as necessary to guide water into the drain.
   2. The inlet of a drain and berm system must be properly constructed to channel water into the temporary drain.
   3. All temporary drains shall be adequately anchored to the slope to prevent disruption by the force of the water flowing into the drain:
      a. If the drain consists of plastic pipe, it must be securely anchored to the ground.

N. Filter Berm:
   1. Install in accordance with MnDOT Spec 2573.3.E and as detailed in Drawings.

O. Flotation Silt Curtain:
   1. Flotation silt curtain shall be installed in locations shown on the Drawings and according to the manufacturer’s specifications:
      a. "Anchor" and secure to prevent any material from passing beneath, over, around, or through the barrier.
      b. Provide sufficient slack to permit the curtain to rise to the maximum expected high water level, including wave action, without being overtopped and still be in continuous contact with the bottom.


© 2026 City of Cottage Grove, Minnesota

2. Place flotation silt curtain as close to the shoreline or work area as possible. Flotation silt curtain shall not be placed across flowing rivers, streams, drainage ditches, or across culvert inlets or outlets.

P. Rapid Stabilization:
   1. Work to be performed under non-schedulable situations requiring rapid stabilization of small critical areas within 200 feet of surface waters to comply with permit requirements.
   2. Methods per MnDOT Spec. 2575.3.M with Seed Mix 22-111.

3.03 MAINTENANCE

A. Conform to MnDOT Spec. 2573.3.A, NPDES permit, and as follows:
   1. Inspect, maintain, and repair any washouts or accumulations of sediment that occur as a result of the grading or construction. Restoration consists of grade repair, turf re-establishment, and street sweeping of mud and debris tracked from the Site.
   2. Inspection of all erosion and sediment control items will take place immediately after each runoff event and at least daily during prolonged rainfall. Make any required repairs immediately.
   3. Maintain the temporary sediment control devices until they are no longer necessary and are removed:
      a. Maintenance consists of keeping the devices functioning properly.
      b. Repair or replace plugged, torn, displaced, damaged, or non-functioning devices.
   4. Upon final acceptance of the Project and establishment of permanent erosion control measures, remove all temporary erosion control measures:
      a. Catch basin protection becomes property of Contractor.
   5. Temporary mulching and temporary seeding/mulching are very effective at controlling erosion. However, these are considered temporary measures. These measures may need to be re-established several times throughout the duration of the Work.
   6. Flotation silt curtain shall remain in place until such time that water contained within is free from turbidity:
      a. Remove curtain within 72 hours after this determination has been made.
      b. At the completion of the Project, remove flotation silt curtain in such a manner so as to minimize release of sediment adhering to the turbidity curtain.

B. Sediment Removal: Conform to MnDOT Spec. 2573.3.P:
   1. Remove sediment from erosion control devices when sediment reaches one-third of the height of the devices, restore such features to their original condition.
   2. Established areas disturbed by the removal of sediment, will require finish grading and restoration with in-kind materials, such as area disturbed as part of silt fence removal. This work shall be considered incidental to the specific bid item.

C. Control dust blowing and movement on Site and roads as directed by Engineer to prevent exposure of soil surfaces, to reduce on and off site damage, to prevent health hazards, and to improve traffic safety.

**END OF SECTION**


© 2026 City of Cottage Grove, Minnesota

This Page Left Blank Intentionally

# SECTION 01 70 00

# EXECUTION REQUIREMENTS

## PART 1 GENERAL

1.01 SUMMARY

A. Section Includes:
   1. Requirements for overall execution of the Work and closeout of the Contract for Final Payment.

B. Measurement and Payment:
   1. All Work and costs of this Section shall be incidental to the Project and included in the Total Base Bid.

1.02 SUBMITTALS

A. Submit the following items consistent with the Conditions of the Contract and Division 01 Sections:
   1. Written Notification of Substantial Completion.
   2. Executed Certificate of Substantial Completion.
   3. Written Notification of Final Completion.
   4. Spare Parts, Operation and Maintenance Manuals, instructions, schedules, warranties, guarantees, Bonds, certificates, certificates of inspection, and other documents.
   5. Final Application for Payment, including accompanying documentation.
   6. IC-134 Forms.
   7. Lien Waivers.

## PART 2 PRODUCTS

Not Used.

## PART 3 EXECUTION

3.01 EXAMINATION

A. Acceptance of Conditions: By commencing Work, Contractor construes acceptance of the adjacent work as satisfactory to receive subsequent work.

B. Existing Conditions: Before commencing Work, inspect work completed by others that is adjacent to Work. If adjacent conditions prevent completion of Work, Contractor will not commence Work until the conditions are corrected.

C. Inspect each product immediately prior to installation. Remove damaged products from Site.


© 2026 City of Cottage Grove, Minnesota

## 3.02 GENERAL INSTALLATION REQUIREMENTS

A. Comply with the manufacturer's instructions for installation of manufactured products to the extent that these instructions are applicable and more explicit or more stringent than requirements indicated in the Contract Documents.

B. Secure Work true to line and level, within recognized industry tolerances, with anchorage devices designed and sized to withstand stresses, vibration, and rocking. Allow for expansion and movement of building.

C. Install each element of work during weather conditions and Project status to ensure coordination of the Work. Isolate each element of work from incompatible work as necessary to prevent deterioration.

D. Record installation details and prepare Record Documents consistent with the General Conditions.

## 3.03 SITE MAINTENANCE

A. Maintain stockpiles, excavations, access roads, and all other work areas free from dust. Employ dust abatement techniques whenever a dust nuisance or hazard occurs, or as directed by Engineer. Comply with local ordinances.

B. Protect hazardous work areas and hazardous material storage areas.

C. Protect trees, unless specifically indicated on Drawings.

D. Clean access roads and haul routes with mechanical street sweeper.

E. Maintain and repair any damage to haul roads. Maintenance shall include, but not be limited to, the following: blading, patching, signing, graveling and dust control. This work will be at the Contractor's expense, without any direct compensation being made other than the payment received for Contract items.

F. If Contractor fails to maintain Site, Engineer will provide Written Notice of Contractor's defective Work. Contractor will be given 12 hours from the Notice to clean Site. After the 12 hour period, Owner may correct the defective Work.

## 3.04 CLEANING AND PROTECTION

A. Clean and protect Work in progress and adjoining Work during handling and installation. Apply protective covering on installed Work where it is required to ensure freedom from damage or deterioration.

B. Clean and perform maintenance as frequently as necessary throughout construction period. Adjust and lubricate operable components to ensure operability without damage effects.


© 2026 City of Cottage Grove, Minnesota

## 3.05 CUTTING AND PATCHING

A. Complete all cutting, fitting, and patching as necessary to join the new Work to existing conditions.

B. Remove or cut existing work only as necessary to join the new work to the existing construction or as required by the Contract Documents.

C. Patch defective and incomplete surfaces caused or exposed by Work of the Project.

D. Repair any damage to existing conditions and patch to match.

E. Existing construction designated by the Contract Documents to remain that is loosened, cracked, or otherwise damaged or defaced beyond repair as a result of Work by the Contractor will be considered unsuitable for the use intended and shall be removed and replaced by the Contractor.

## 3.06 CERTIFICATE OF COMPLIANCE WITH MINNESOTA STATUTES 290.92 AND 290.97

A. Upon completion of the Project and prior to Final Payment, the Contractor and all subcontractors shall complete Minnesota Department of Revenue Revised Form IC-134. This form, Affidavit for Obtaining Final Settlement of Contract with the State of Minnesota and any of its Political or Governmental Subdivisions, is to be signed by a Department of Revenue representative and forwarded to the Owner. Copies of this form can be obtained by writing to the Minnesota Department of Revenue, Forms Section, Mail Station 1173, St. Paul, MN 55146-1173 or by calling (651) 296-4444.

**END OF SECTION**


© 2026 City of Cottage Grove, Minnesota

This Page Left Blank Intentionally

# SECTION 02 41 13

# SELECTIVE SITE DEMOLITION

## PART 1 GENERAL

1.01 SUMMARY

A. Section Includes:
   1. Complete or partial removal and disposal or salvage of at grade, above grade, and below grade structures and miscellaneous items.

B. Related Sections:
   1. Section 31 23 00 - Excavation and Fill.
   2. Section 32 13 14 - Concrete Walks, Medians, and Driveways.
   3. Section 32 16 13 - Concrete Curb and Gutters.
   4. Section 32 17 23 - Pavement Markings.
   5. Section 33 05 06 - Trenching and Backfilling.
   6. Section 33 05 18 - Adjust Miscellaneous Structures.
   7. Section 33 10 00 - Water Utilities.
   8. Section 34 41 05 - Traffic Signs and Devices.

1.02 PRICE AND PAYMENT PROCEDURES

A. Measurement and Payment:
   1. Payment at the Bid Unit Price will be considered compensation in full for all Work necessary to complete the Bid Item in full, including removal, salvage, storage, disposal, and reinstallation.
   2. Measurement will be based upon the units as listed below for items removed, abandoned, or salvaged complete as specified. No measurement will be made of any removals that are not required. The actual quantity removed multiplied by the appropriate Bid Unit Price will be compensation in full for all Work and costs of the following Bid Items:
      a. Sawing Concrete Pavement and Sawing Concrete Driveway Pavement: Per lineal foot along the saw cut line as staked, regardless of thickness.
      b. Sawing Bituminous Pavement (Street or Trail) and Sawing Bituminous Driveway Pavement: Per lineal foot along the saw cut line as staked, regardless of thickness.
      c. Remove Bituminous Street Pavement: Per square yard without regard to thickness, including integral bituminous curb if applicable.
      d. Remove Bituminous Trail and Remove Bituminous Driveway Pavement: Per square yard without regard to thickness.
      e. Remove Bituminous Wedge: Per square yard of bituminous wedge removed, regardless of thickness.
      f. Mill Bituminous Pavement: Per square yard, according to depth, including off-site disposal.
      g. Remove Concrete Pavement: Per square yard without regard to thickness.
      h. Remove Concrete Sidewalk or Pedestrian Ramp: Per square foot without regard to thickness.
      i. Remove Concrete Valley Gutter: Per square yard without regard to thickness.


© 2026 City of Cottage Grove, Minnesota

j. Remove Concrete Curb and Gutter: Per linear foot, regardless of type.
k. Remove Concrete Driveway Pavement: Per square yard without regard to thickness.
l. Remove Concrete Spillway: Per square yard without regard to thickness.
m. Remove Concrete Median: Per square yard, without regard to thickness.
n. Remove Valve and Box: Per each.
o. Remove Hydrant: Per each.
p. Remove Catch Basin or Manhole: Per each. Regardless of size of structure. Granular material is incidental to the removal.
q. Remove Retaining Wall: Per square yard, measured to existing ground level.
r. Remove Pipe or Culvert: Per linear foot of the size and type specified, measured from center of junction fittings, catch basins, or manholes, and will include the length of any aprons.
s. Remove Trash Guard from Flared End Section: Per each, according to size and type.
t. Remove Sign and Post, Signpost, or Barricade: Per each.
u. Remove Pavement Markings: Per linear foot, regardless of type or size.
v. Remove Pavement Messages: Per each, regardless of type or size.
w. Remove and Replace Concrete items: Various Bid Items have been provided in Sections 32 13 14 and 32 16 13.
x. Abandon Pipe: Per linear foot according to size of pipe, measured from center of junction fittings, catch basins, or manholes, and will include bulk heading and filling the pipe with lean mix backfill.
y. Abandon Structure: Per each, regardless of size of structure, and will include furnishing and installing granular material and removal of casting, adjusting rings and top section from Site.
z. Salvage and Reinstall Fence: Per linear foot of the type specified.
aa. Salvage and Reinstall Pipe or Culvert: Per linear foot of the type and size specified.
bb. Salvage and Reinstall Flared End Section: Per each of the size specified.
cc. Salvage and Reinstall Sign: Per each. Payment will include all hardware required to reinstall sign.
dd. Salvage and Reinstall Sign and Post: Per each
ee. Salvage and Reinstall Mailbox: Per each. Payment will include all costs to salvage and re-install the mailbox, including similar footing.
ff. Salvage and Reinstall Community Mailbox: Per each. Payment will include all costs to salvage and reinstall the mailbox and removal of existing concrete pad. A separate bid item has been provided for 6 Inch Concrete Mailbox Pad.
gg. Temporary Mailbox: Per each. Payment will include all costs to furnish and install a temporary mailbox at a temporary location as determined by the Engineer in the field.
hh. Salvage and Reinstall Permanent Barricade: Per each, including sign panel.
ii. Salvage and Reinstall Hydrant: Per each.
jj. Salvage and Reinstall Valve and Box: Per each, according to size & type.
kk. Salvage and Reinstall DIP: Per linear foot, according to size. Sawcutting and removing any extra pipe that is not needed at the new hydrant location will be considered incidental.

3. Homeowners will be responsible for removing irrigation, landscaping, fences, etc. within the right-of-way that are in conflict with the proposed construction of the final street improvements.
4. All other Work and costs of this Section shall be incidental to the Project and included in the Total Base Bid.


© 2026 City of Cottage Grove, Minnesota

1.03 REFERENCES

A. Minnesota Department of Transportation “Standard Specifications for Construction” 2025 Edition (MnDOT Spec.):
   1. 2104 - Removing Pavement and Miscellaneous Structures.
   2. 2520 - Lean Mix Backfill.

1.04 DEFINITIONS

A. Remove: To take away or eliminate from the Site by any method selected by the Contractor, including disposal of material.

B. Salvage: To dismantle, disassemble, or remove carefully without damage so the item can be re-assembled, replaced, or reused in a workable condition equal to that existing before removal.

C. Abandon: To fill, bulkhead, or close off pipes and structures so that no settlement or flow can occur.

1.05 REGULATORY REQUIREMENTS

A. Conform to MnDOT Spec. 2104.3.C, with the following modifications:
   1. Dispose of all materials designated for removal outside the Site at locations selected by Contractor.
   2. Stockpile or temporarily store materials designated for salvage at locations provided by Contractor.

1.06 SCHEDULING

A. Prior to starting Work, submit for review by the Engineer and approval by the Owner, a schedule showing the commencement, order, and completion dates of the various parts of this Work.

B. Install temporary erosion control, construction fence, barriers, and warning signs prior to removals.

C. Fill holes or depressions resulting from removal or salvage immediately.

D. Complete the remove and replace concrete curb or sidewalk to allow access to driveway within 7 calendar days, beginning on the day of the removals, or per applicable Milestones in Section 00 52 10, Paragraph 4.02.

E. Provide temporary surface restoration for traffic continuity where removal or salvage operations are completed within streets, driveways, or parking lots.

**PART 2 PRODUCTS**

2.01 LEAN MIX BACKFILL:

A. Conform to MnDOT Spec. 2520.


© 2026 City of Cottage Grove, Minnesota

## PART 3 EXECUTION

3.01 GENERAL

A. Dispose of all items removed, except for those items identified to be salvaged or recycled. Said disposal shall be in accordance with all laws, regulations, statutes, etc.

B. Protect all sawcut edges. Where sawn edge is damaged, the Contractor shall recut sawn edge, remove damaged material, and replace damaged material at no expense to the Owner.

C. Perform removal work without damage to adjacent retained work. Where such Work is damaged, patch, repair, or otherwise restore same to its original condition at no expense to the Owner.

D. Remove debris from the work area as often as necessary, but not less than at least once at the end of each workday. Debris shall be placed in approved containers to prevent the spread of dust and dirt.

E. Execute the Work in a careful and orderly manner with the least possible disturbance to the public and occupants of buildings.

F. The Contractor shall notify Engineer immediately if existing street lighting wire is exposed during removal operations.

G. Fill holes resulting from removals consistent with Section 31 23 00.

H. Remove and replace damaged curb as directed by the Engineer.

I. Remove 10 feet of concrete curb and gutter on each side of the catch basin that are adjusted, as directed by the Engineer.

3.02 EXAMINATION

A. Meet with owners of signs to determine requirements for salvage, storage, and replacement.

B. Develop plan acceptable to Engineer and postal service for maintaining mail service. Temporary relocations of mailboxes will be necessary.

3.03 PROTECTION

A. Take all necessary precautions to adequately protect personnel and public and private property in the areas of Work. All Site fencing shall be in place prior to the start of any removal work.

B. Remove, store safely, and replace all street signs, traffic control signs, guy wires, mailboxes, posts, wood fence, etc. that may interfere with construction.

C. Provide approved barriers or warning signs as necessary.

D. Provide and maintain temporary protection of existing structures designated to remain where removal work is being done, connections made, materials handled, or equipment moved.


© 2026 City of Cottage Grove, Minnesota

E. Do not close or obstruct walkways or roadways. Do not store or place materials in passageways or other means of egress. Conduct operations with minimum traffic interference.

F. Take reasonable precautions to limit damage to existing turf.

G. Holes or depressions created by removals shall not be left open for more than 1 day. Any hole within 10 feet of sidewalks shall be filled, suitably marked, or covered immediately.

H. Avoid disturbance to any material beyond the limits required for new construction.

3.04 SAWING PAVEMENT

A. Concrete Pavement: Saw along the removal line to full depth of the existing concrete prior to removal of the pavement.

B. Bituminous Pavement: Saw along the removal line to the full depth of the pavement prior to removal of the pavement.

C. Provide means and method (such as snapping a chalk line) to establish a straight and uniform sawed line.

3.05 REMOVE CONCRETE PAVEMENT

A. Remove in accordance with MnDOT Spec. 2104.3.C, except as modified below:
   1. Saw cut concrete pavement and concrete base prior to mechanical pavement removal equipment. Remove concrete in such a manner that the remaining pavement is not damaged.
   2. Prior to restoring trench areas, the edges of the trench shall be trimmed back to a vertical face on a straight line which is parallel with the centerline of the trench.

3.06 REMOVE BITUMINOUS PAVEMENT

A. Remove in accordance with MnDOT Spec. 2104.3.C, except as modified below:
   1. Saw cut bituminous pavement at the removal limits prior to that removal, unless otherwise approved by the Engineer.
   2. Remove bituminous in such a manner that the remaining surfacing is not damaged.
   3. Prior to restoring trench areas, the edges of the trench shall be trimmed back to a vertical face on a straight line which is parallel with the centerline of the trench.
   4. If a reclamation process is used to remove pavement, the resulting reclaimed material could contain diesel range organics (DRO) which must be disposed of in accordance with MPCA requirements.

3.07 REMOVE CURB AND GUTTER

A. Excavation of the existing boulevard material to allow for the placement of the new concrete curb and gutter, and specified depth of topsoil/compost shall be considered incidental to the concrete curb removal Bid Item.
   1. This will include stripping and disposing of 6 inches of existing vegetation for 6 feet (full curb) or 2 feet (spot curb).


© 2026 City of Cottage Grove, Minnesota

a. In the full curb area, boulevard trees will need to be worked around and protected per the Engineer's direction.

B. Saw cut at removal limits.

C. Limits of removal may vary in length (5 feet minimum) and may be in multiple locations.

3.08 PAVEMENT MILLING

A. Bituminous:
1. Saw cut at removal limits prior to milling process.
2. Mill bituminous surface to the depth specified as shown on the Drawings or as directed by the Engineer. The milled surface shall be uniform and consistent, with minimal depth of grooves.
3. Dispose of millings at an approved off-site disposal location.
4. Sweeping with pickup broom or vacuum clean the milled surface shall be incidental to the milling process. Perform sweeping until milled surface is accepted by the Engineer.

B. Concrete:
1. Mill surface to the depth specified as shown on the Drawings or as directed by the Engineer.
2. Dispose of millings at an approved off-site disposal location.
3. Sweeping with pickup broom and cleaning the milled surface shall be incidental to the milling process.

3.09 REMOVE CONCRETE SURFACING

A. Work includes sidewalks, pedestrian ramps, medians, valley gutters, and driveways.

B. Saw cut concrete surfacing prior to removal.

C. Remove concrete in such a manner that the remaining surfacing is not damaged.

D. When removing existing sidewalks, do not disturb any material beyond the limits required for new construction (assumed as 6 inches maximum beyond and 8 inches maximum below existing grade).

E. When removing existing driveways, do not disturb any material beyond the limits required to form for new construction (assumed 12 inches maximum from the back of new Work and 6 inches beyond the edge of new driveways).

F. Prior to restoring trench areas, the edges of the trench shall be trimmed back to a vertical face on a straight line which is parallel with the centerline of the trench.

3.10 REMOVE BITUMINOUS TRAILS AND DRIVEWAYS

A. Saw cut bituminous surfacing to full depth at the limits of partial removal prior to that removal, unless otherwise approved by the Engineer.

B. Remove bituminous in such a manner that the remaining surfacing is not damaged.


© 2026 City of Cottage Grove, Minnesota

C. Prior to restoring trench areas, the edges of the trench shall be trimmed back to a vertical face on a straight line which is parallel with the centerline of the trench.

D. When removing existing trails and driveways, do not disturb any material beyond the limits required to form for new construction (assumed 12 inches maximum from the back of new work and 6 inches beyond the edge of new driveways).

3.11 REMOVE BITUMINOUS WEDGE

A. Remove bituminous wedge as shown on the Drawings or as directed by the Engineer.

B. Mill bituminous wedge in a manner that does not disturb the bituminous non wear course.

3.12 REMOVE/ABANDON MANHOLES AND CATCHBASINS

A. Remove Structure:
   1. Remove entire structure, including casting and adjusting rings.
   2. Fill void left by structure with suitable material per Section 33 05 06.
   3. If requested by the Owner, deliver salvaged casting to Owner's Maintenance Facility.

B. Abandon Structure:
   1. Remove casting, adjusting rings, and cone section or manhole section of structure, a minimum of 3 feet below final grade.
   2. Place and compact granular material within the remaining in place structure and the excavated area to finish grade.

3.13 REMOVE/ABANDON SECTIONS OF EXISTING PIPE

A. Remove Pipe:
   1. Remove entire pipe to limits shown on the Drawings or as directed by the Engineer.
   2. Fill void left by pipe with suitable material per Section 33 05 06.

B. Abandon Pipe:
   1. Bulkhead pipe with an 8 inch thick, non-shrink concrete grout plug at the upstream and downstream ends, and at locations as determined by the Engineer. On pipes 18 inches diameter and larger, brick or concrete block masonry may be used with non-shrink grout to construct the bulkhead.
   2. Fill with lean mix backfill.

C. Remove pipe to be abandoned if the top of pipe is within 3 feet of final surface elevation.

3.14 REMOVE RETAINING WALL

A. Avoid damage to sections of wall to remain.

B. Dispose of materials off the Site at a predetermined location.

C. Remove wall in its entirety, including footings and tiebacks.


© 2026 City of Cottage Grove, Minnesota

## 3.15 REMOVE SIGNS AND BARRICADES

A. Remove signs and barricades as shown on the Drawings or as directed by the Engineer.

B. Remove post, including sign panel.

C. Remove barricade, including “Future Road Extension” sign.

D. Provide Engineer or Owner 48 hours notice prior to removing posts or barricades.

## 3.16 REMOVE PAVEMENT MARKINGS AND MESSAGES

A. Remove to the limits shown on the Drawings or as directed by the Engineer.

B. Removal of markings and messages shall be accomplished with suitable sand or water blasting equipment, unless other means are authorized by the Engineer. Grinding is not an acceptable method of removal. The bituminous street surface shall not be damaged by the removal operations.

## 3.17 SALVAGE AND REINSTALL

A. Signs and Barricades:
   1. In no case shall a traffic sign or street sign be removed or disturbed by Contractor without prior notification being given to Engineer and then only after satisfactory arrangements have been made for a temporary installation or its disposition:
      a. Maintain temporary post mounted street identification signage at all times due to its importance to the 911 Emergency Response System.
      b. Maintain temporary post mounted traffic signage on all streets open to traffic.
      c. Temporary post mounted installation shall be considered incidental to the Project.
   2. Owner to salvage sign panel from post and temporarily store until reinstallation.
   3. Remove remaining post following salvaging of sign panel by Owner.
   4. Install temporary post mounted signs as described above.
   5. Install new post and hardware per Section 34 41 05.
   6. Attach salvaged sign panel provided by Owner.
   7. Remove signs and barricades that are damaged during construction and replace with new signs as incidental to the Project.
   8. Contact the County directly related to all signs within the County right-of-way that may need to be temporarily or permanently removed.

B. Mailboxes:
   1. Remove and salvage existing mailboxes that interfere with the Work or whose access is restricted by the construction activities.
   2. Place at temporary locations as directed by Engineer or as shown on Drawings.
   3. Removal, temporary re-installation, and replacement shall occur such that mail delivery is not interrupted.
   4. Reinstall in locations as shown on Drawings or as directed by Engineer.
   5. Replace mailboxes, posts, and appurtenances damaged during construction at no charge to Owner.


© 2026 City of Cottage Grove, Minnesota

C. Community Mailboxes:
   1. Remove and salvage existing mailboxes that interfere with the Work or whose access is restricted by the construction activities. Includes the removal and disposal of the existing concrete pad.
   2. Removal, temporary re-installation, and replacement shall occur such that mail delivery is not interrupted.
   3. Reinstall in locations as shown on Drawings or as directed by Engineer. A separate bid item has been provided for the 6 Inch Concrete Mailbox Pad.
   4. Replace mailboxes, posts, and appurtenances damaged during construction at no charge to Owner.

D. Fences:
   1. Salvage and store fence and post material where they are not in conflict with the Work.
   2. After completion of Work, reinstall fence to the condition existing prior to removal.
   3. Install temporary snow fence or similar barrier at the end of the working day while the permanent fence is removed.

E. Culverts and Flared End Sections:
   1. Where possible, salvage existing pipe in areas to be disturbed by the construction.
   2. Reinstall in original condition and location as shown on the Drawings.
   3. If requested by the Owner, deliver salvaged material to Owner's Maintenance Facility.

F. Hydrants, Gate Valves, and Hydrant Leads:
   1. Salvage existing hydrants, gate valves, and ductile iron pipe leads at locations shown on the Drawings or as determined by the Engineer.
   2. Reinstall in original condition at the location shown on the Drawings or as directed by the Engineer.
   3. Reinstall per Section 33 10 00 and the Standard Detail Plates in the Drawings.

## 3.18 FIELD QUALITY CONTROL

A. Salvaged items to be reinstalled shall be of the same shape, dimension, location, and quality of the original item prior to construction.

B. Items damaged during removal or salvaging operations shall be replaced with new material of equal type and quality of the damaged item when it was new.

## 3.19 DISPOSING OF MATERIAL

A. Dispose of all materials outside of the Site at disposal location selected by Contractor in compliance with state and local regulations. Burying of material and debris is not allowed within the Site.

**END OF SECTION**


© 2026 City of Cottage Grove, Minnesota

This Page Left Blank Intentionally

# SECTION 12 41 00

# FURNISHINGS AND ACCESSORIES

## PART 1 GENERAL

### 1.01 SUMMARY

A. Section Includes:
   1. Types of Project Site Furnishings Include: basketball post and backboard, and park shelter.
   2. Work includes furnishing and installing Project Site Furnishings and supplying necessary inserts, anchors, templates, and setting diagrams for incorporation into the work of others.

B. Related Sections:
   1. Section 01 33 00 - Submittals.
   2. Section 03 30 10 - Reinforced Concrete.
   3. Section 32 13 14 - Concrete Walks, Medians, Driveways.
   4. Section 32 11 23 - Aggregate Base Courses.

### 1.02 PRICE AND PAYMENT PROCEDURES

A. Measurement and Payment:
   1. Tree Protection Fence: Measurement shall be by linear foot and payment shall be full compensation for all work and costs in furnishing, installing, maintaining and removing the fence.
   2. Picnic Table: Measurement shall be by each and payment shall be full compensation for all work and cost in furnishing and installing picnic table on concrete pad.
   3. Park Bench: Measurement shall be by each and payment shall be full compensation for all work and cost in furnishing and installing park bench on concrete pad.
   4. Trash Can: Measurement shall be by each and payment shall be full compensation for all work and cost in furnishing and installing trash can and liner on concrete pad.
   5. Concrete Bollard: Measurement shall be by each and payment shall be full compensation for all work and costs for furnishing and installing concrete bollard.
   6. Pipe Rail: Measurement shall be by linear foot based on horizontal length of the railing as shown on the Drawings regardless of number of vertical and horizontal members. Payment shall be full compensation for fabrication, surface preparation, coating, galvanizing, metal posts, fittings, castings, anchor bolts, accessories required for erection, and installation.
   7. Park Shelter: Measurement shall be by each according to size and payment shall be full compensation for all work and costs associated with furnishing and installing this item complete as specified, including excavation, aggregate, concrete foundation and slab, shelter lighting, and GFIC receptacle.
      a. Lighting and receptacle include installation of light, conduit, wire, outlet box, mounting hardware, and miscellaneous items required for complete installation.
   8. Basketball Pole and Backboard: Measurement shall be by each and payment shall be full compensation for all work and costs associated with furnishing and installing this work complete as specified.
   9. Park Monument Sign Foundation: Measurement shall be by each and payment shall be full compensation for all work and costs associated with installation including excavation, aggregate, and concrete as specified.


© 2026 City of Cottage Grove, Minnesota

10. Concrete Pad: Measurement shall be by square yard and payment shall include excavation, subgrade preparation, aggregate, concrete, and all other incidental items needed to place concrete as specified.
11. All other Work and costs of this Section shall be incidental to the Project and included in the Total Base Bid.

1.03 REFERENCES

A. Minnesota Department of Transportation "Standard Specifications for Construction," 2025 Edition (MnDOT Spec.)

B. American Society for Testing and Materials (ASTM)

C. American Concrete Institute (ACI)

D. Concrete Reinforcing Steel Institute (CRSI)

1.04 SEQUENCING AND SCHEDULING

A. Prior to starting work, submit a schedule showing the order and completion of Work for review and approval by the Owner.

B. Perform routine inspections to make sure the tree protection fence is still functioning as designed.

C. Provide notice by 2:00 PM the day prior to any concrete placement to allow time for scheduling of the following activities. Notice must include mix designation, start time of placement, plant producing concrete, and foreman onsite during placement.
1. Aggregate base DCP tests (per Section 32 11 23) prior to concrete placement.
2. Inspection of placement operations. No concrete will be accepted without inspection.
3. Concrete field and plant testing if required.

D. Protection fence shall be removed upon project completion.

E. Install park bench, picnic table, trash can, bollard, and pipe rail after topsoil placement has been completed.

1.05 SUBMITTALS

A. Submit all required items before commencement of Work in accordance with Section 01 33 00.

B. Shop Drawings
1. For each item specified, provide information showing detail, location, material, finish, size and method of joining various assemblies.
2. Provide templates and rough-in measurements as required.
3. Mark items requiring field assembly for erection identification and furnish erection drawings and instruction.
4. Reinforcing steel in accordance with CRSI Manual of Standard Practice and ACI SP 66.
5. Submit MnDOT approved mix design for each concrete mix designation used.


© 2026 City of Cottage Grove, Minnesota

C. Setting Diagrams
    1. Provide setting diagrams, templates, instructions and directions for installation of anchorage devices and any cut-out requirements in other work.

1.06 QUALITY ASSURANCE

A. Qualifications
    1. Installer: Engage experienced installer that has completed installation similar in material, design, and extent to that depicted on the Drawings.

1.07 DELIVERY, STORAGE AND HANDLING

A. Delivery and Acceptance
    1. Package to prevent damage during shipment, handling, storage and installation. Maintain protective covering in place and in good repair until removal is necessary.
    2. Products shall be delivered to the Site in the manufacturer's original, unopened containers and packaging. Notify Owner's Representative a minimum of 5 days prior to delivery for inspection.
    3. Contractor shall remove all shipping materials as necessary to inspect products for damage immediately upon delivery and coordinate inspection by Owner's Representative.

B. Storage and Handling
    1. Contractor shall repack and store products in a secure area and protect from damage and adverse environmental conditions until installation is performed. Products shall be protected from damage during handling and installation.

C. Waste Management and Disposal
    1. Dispose of all waste generated from packaging and installation as in accordance with applicable regulations.
    2. Any excess material is the property of the Contractor and shall be disposed of off-Site.

1.08 WARRANTY

A. Manufacturer's Warranty: Submit manufacturer's standard limited warranty on all Site furnishing Bid Items.

B. Installer Warranty: Installer shall warrant all site furnishing installations for a period of no less than one year, including anchorage and fastener failure.

**PART 2 PRODUCTS**

2.01 MATERIALS

A. Tree Protection Fence:
    1. Orange safety fence.
    2. At least 4' in height.
    3. Steel T posts placed a maximum of 10' on center.


© 2026 City of Cottage Grove, Minnesota

B. Picnic Table:
   1. Provide a picnic table as manufactured by Pilot Rock, or approved equal.
   2. Model: Pilot Rock WPTS/CB-8RB Series with powder coated frame and thermoplastic coated perforated steel black in color, 8' with ADA access.
   3. Supplier: St Croix Recreation Co, Inc.
      https://stcroixrec.com/, 1-800-525-5914
      Contact: Mike Basich, 651-430-1247

C. Park Bench:
   1. Pilot Rock Model RJT B94/CB-6SS/CB, or approved equal.
      a. 6' bench with back, black.

D. Trash Can:
   1. Pilot Rock Model CN-R/SS2-36D, or approved equal.
      a. 36 gallon flat top lid, black.
      b. Heavy Duty Rigid Plastic Liner CN-B-1827, or approved equal.

E. Concrete Bollard:
   1. Conform to the detail shown on the Drawings.

F. Pipe Rail:
   1. Conform to MnDOT Spec. 2475.3.B and 2475.3.C.

G. Basketball Pole and Backboard
   1. Model: First Team – Titan Supreme, or approved equal.
      a. 6' Black Square Post.
      b. Adjustable Extension Arm.
      c. 42" x 72" Acrylic Backboard.
      d. Heavy Duty Flex Goal.

H. Park Shelter:
   1. All-Steel Shelter w/All-Steel Square Cupola, Manufactured by Superior Shelters, RCP Shelters, or CoverWorx (Steelworx).
      a. Dimensions as shown on Drawings.
         1) Minimum 7'6" Eave Height.
         2) 4:12 Roof Pitch, w/24 Ga. MultiRib PreCut Metal Roofing with steel edging.
   2. Powder coated forest green roof with chocolate brown framing
   3. Provide signed Drawings by a licensed Engineer in the state of Minnesota for the shelter structure, typically obtained from the supplier. The signed Drawings will need to be submitted with the building permit discussed in paragraph 3.04.
   4. Include security light located in center of shelter
      a. Light shall be LED 20W RAB WPLED20, or approved equal.
   5. Include GFCI outlet located at corner of shelter as shown on Drawings.

I. Concrete:
   1. Conform to section 32 13 14 2.01.A except as modified herein:
      a. Slab, Park Monument Sign Foundation, and Concrete Pad Mix No. 3F52A.
   2. Foundation: conform to MnDOT 2461.2 mix design 1G52.
   3. Curing Compound: conform to section 32 13 14 2.01.D.


© 2026 City of Cottage Grove, Minnesota

4. Reinforcing Steel:
    a. Deformed bars: ASTM A615, grade 60.
    b. Welded wire fabric: ASTM A497, flat sheets only.

J. Aggregate Base:
    1. Conform to section 32 11 23 2.01.B.

K. Miscellaneous Material:
    1. Nonshrink Grout:
        a. Color to match concrete.
        b. Nonmetallic and nongas-liberating flowable fluid.
        c. BASF: Masterflow 928, Euclid Chemical Co
    2. Steel Anchors and Fasteners:
        a. Dowels and Pins: Stainless steel, ASTM A276, Type 304. Substitutions may be submitted to Owners Representative.
        b. Anchor rod structural adhesive: Hilti, Inc HIT-RE 500 V3 Epoxy Adhesive or approved equal.
    3. Joint Sealant: One-component elastomeric self-leveling polyurethane sealant by BASF: Sonolastic SL1, Sika: Sikaflex -1C SL, or approved equal.

## PART 3 EXECUTION

### 3.01 EXAMINATION

A. Field Measurements: The Contractor shall verify site conditions and dimensions shown on the Drawings. Notify the Owner's Representative of any differences, obstructions, or utilities that in any way affect the installation of furnishings.

B. The Contractor shall be responsible for verifying the presence and location of underground utilities prior to excavation. Damage to utility lines, services, and other structures shall be repaired at the Contractor's expense.

C. Examine the surfaces intended to receive the furnishings for compliance with all requirements, including tolerances, level grade, mounting requirements, and any other conditions affecting performance.

D. The Contractor shall inspect the correct and level finish grade, mounting surfaces, and other conditions affecting performance. Discrepancies, irregularities, etc. shall be brought to the attention of the Owner's Representative.

### 3.02 PREPARATION

A. Where existing work and improvements are in place, cover, fence, and protect all such work from damage and soiling from construction operations.

B. Contractor shall maintain and protect all erosion control measures during construction. Contractor shall also protect all existing trees on Site not noted for removal. Any damage to


© 2026 City of Cottage Grove, Minnesota

existing structures, vegetation to remain, or erosion control shall be immediately reported to the Owner's Representative and replaced at the Contractor's expense.

C. If the Site conditions do not allow for the installation as shown on the Drawings, contact the Owner's Representative and provide a proposed modification to the method or location for approval prior to proceeding with the installation.

D. Unpack and assemble (as needed) and install the items in accordance with the manufacturer's printed instructions, unless otherwise specified or shown.

3.03 INSTALLATION

A. General
   1. Install all items per the manufacturer's printed recommendation, details, and product literature. Do not remove any protective coverings until installation is complete.
   2. Install items rigid, plumb, level, and true to lines and orientation shown in the Drawings or shop drawings.
   3. Contractor shall take necessary steps to protect furnishings and existing work, surfaces, and vegetation from damage during transport, handling, or installation.
   4. Contractor shall permanently affix all site furnishings to the ground as specified.
   5. Erection tolerances: Maximum variation from True position = 0.5 inch.

3.04 PARK SHELTER

A. Contractor will be responsible to pull a building permit with the City of Cottage Grove Building Official, submit all required documentation – including signed drawings, and schedule all necessary inspections.

B. Submit proposed method of passing electrical conduit through foundation slab and inside of structure column to the shelter light unit and receptacle in accordance with Section 01 33 00 - Submittals.

C. Furnish and install security light inside of structure, including all electrical connections and wiring necessary within the structure.

D. Provide power from power source as indicated on drawings to light and receptacle.

3.05 CONCRETE

A. Formwork:
   1. Construction:
      a. In accordance with ACI 347.
      b. Make joints tight to prevent escape of mortar and to avoid formation of fins.
      c. Brace as required to prevent distortion during concrete placement.
      d. On exposed surfaces locate form ties in uniform pattern or as shown.
      e. Construct so ties remain embedded in the wall with no metal within 1 inch of concrete surface when forms, inserts, and tie ends are removed.


© 2026 City of Cottage Grove, Minnesota

2. Form Removal:
    a. Remove after concrete has attained at least 70% of 28 day strength, or approval is obtained in writing from Engineer.
    b. Remove forms with care to prevent scarring and damaging the surface.

3. Reinforcing steel:
    a. Unless otherwise specified, place reinforcing steel in accordance with CRSI Recommended Practice for Placing Reinforcing Bars.
    b. Place and support slab reinforcement on reinforcement chairs. Place reinforcement 2" from the top surface of the slab.
    c. Splices and Laps: As specified on the Drawings and as listed below:
        1) Tie splices with 18 gauge annealed wire as specified in CRSI Standard.
        2) Splice length for WWF: One full mesh plus 2 inches, 6 inches minimum.

4. Placement and Finishing
    a. Place concrete in accordance with section 32 13 14 3.01 and 3.06.A except as modified herein:
        1) Prior to placing concrete, remove water from excavation and debris and foreign material from forms. Check reinforcing steel for proper placement and correct discrepancies.
        2) Before depositing new concrete on old concrete, clean surface using sandblast or bushhammer or other mechanical means to obtain a 1/4 inch rough profile, and pour a cement-sand grout to minimum depth of 1/2 inch over the surface. Proportion 1 part cement to 2.5 parts sand by weight.
        3) Place concrete as soon as possible after leaving mixer, without segregation or loss of ingredients, without splashing forms or steel above, and in layers not over 2 feet deep. Place within 90 minutes after adding cement to mix.
        4) Four feet maximum vertical drop to final placement, when not guided with chutes or other devices to prevent segregation due to impact with reinforcing.

## 3.06 CLEANING, REPAIR, & RESTORATION

A. All damage to Site resulting from the installation of the furnishings shall be repaired by the Contractor at no cost to the Owner.

B. Soil, dust, or other materials brought onto paved areas shall be removed promptly.

C. Restore areas damaged during installation to their original condition unless otherwise specified or depicted on the Drawings.

D. Touch-Ups: Touch up scratches and other blemishes in the powder coat, paints and other finishes in accordance with the manufacturer's recommendations.

## 3.07 FIELD QUALITY CONTROL

A. Any concrete damaged prior to acceptance shall be removed and replaced by the Contractor, and will be incidental to the Project.


© 2026 City of Cottage Grove, Minnesota

B. The Owner shall have an independent testing laboratory perform the following tests as a minimum. The test locations will be determined by the Engineer.
   1. One Air Entrainment test per day, per concrete mix.
   2. One slump test per day per concrete mix.
   3. One set of cylinders for compression tests per day, per concrete mix.

**END OF SECTION**


© 2026 City of Cottage Grove, Minnesota

# SECTION 26 05 59

# IRRIGATION SYSTEM ELECTRICAL SUPPLY

## PART 1 GENERAL

### 1.01 SUMMARY

A. Section Includes:
   1. Provide and install materials and equipment for supply of power to irrigation control cabinet and pumps in accordance with the National Electrical Code (NEC), MnDOT Specifications, and as specified in the Contract.
   2. Coordination with utility to obtain electrical service and connection to electrical service source.
   3. Other miscellaneous work shown on the plans or specified herein.

B. Related Sections:
   1. Section 32 80 00 - Irrigation System.

### 1.02 PRICE AND PAYMENT PROCEDURES

A. Measurement and Payment:
   1. Payment included under bid item for Irrigation System in section 32 80 00 1.02 includes full compensation for the cost of conduit, conduit sleeves, handholes, couplings, elbows, bushings, sealing around the conduit where it enters a pull box, conductors, pulling, splicing, making required connections, testing, grounding and bonding, all other miscellaneous items required for a complete installation as specified, and coordination with Xcel for power.
   2. All other Work and costs of this Section shall be incidental to the Project and included in the Total Base Bid.

### 1.03 REFERENCES

A. National Electrical Code (NEC).

B. Minnesota Department of Transportation “Standard Specifications for Construction”, 2025 Edition (MnDOT Spec.):
   1. 3801 - Rigid Steel Conduit.
   2. 3815 - Cables and Conductors.

### 1.04 SUBMITTALS

A. Submit all required Items before commencement of Work in accordance with section 01 33 00.

B. Submit an electrical design including the following items:
   1. Size and type of conduit.
   2. Size and type of conductors.
   3. Location of connection to source of power.


© 2026 City of Cottage Grove, Minnesota

C. Submit manufacturers product information for the following items as specified:
   1. Conduit.
   2. Conductors and splices for above and below ground.
   3. Handhole.
   4. Receptacles and switches.

D. Provide operations manual for booster pump if pump required.

1.05 QUALITY ASSURANCE

A. Qualifications
   1. Contractor: Must be a Minnesota Licensed Electrical Contractor in “good standing” with the Minnesota State Board of Electricity at the time of bid submission.
   2. Contractor must provide at least one person at all times during execution of this portion of work who is thoroughly familiar with the type of materials being installed and is directly responsible for all work performed under this Section.

1.06 SEQUENCING AND SCHEDULING

A. Coordinate with Xcel for all new services or switching of service from existing to new service cabinet prior to preconstruction meeting. Provide schedule as part of overall schedule at preconstruction meeting.

B. Provide 48 hour notice to Engineer prior to installations to allow for staking locations of any conduit, handholes.

C. Install all conduit for crossings under, streets, parking lots, trails, and sidewalks as identified in drawings prior to grading work.

**PART 2 PRODUCTS**

2.01 MATERIALS

A. Non-Metallic Conduit: Except where required by the NEC and noted herein all conduct shall be type PVC schedule 40.
   1. Provide conduit in accordance with NEC Article 352 except as modified herein:
      a. Conduit shall be a minimum of .75 inch diameter unless otherwise noted.
         1) The conduit that contains only control wiring may be reduced in size to 0.5 inch.
   2. All exposed conduit and fittings installed on an exterior surface or emerges from the ground outside of an enclosure shall be in accordance with MnDOT Spec. 3801.2.
      a. Includes conduit containing only control wiring.
   3. Liquid Tight Flexible Metal Conduit may be used only when the entire length of conduit, including fittings, is not greater than 6 feet and the entire run is located within the irrigation cabinet.

B. Conductors:
   1. Provide conductors in accordance with MnDOT 3815 except as modified herein:
      a. Unless otherwise noted, all conductors shall be stranded copper, Type XHHW.


© 2026 City of Cottage Grove, Minnesota

b. Conductors shall be sized according to National Electric Code and verified through voltage drop calculations except as noted:
    1) Minimum size conductor shall be #10 AWG except as noted:
        a) The Minimum size conductor that supplies power to the irrigation controller only may be reduced to #12 AWG.
    2) Conductors for irrigation pumps shall not have a voltage drop exceeding 3% when calculated from the overcurrent protective device at the service to the irrigation pump disconnect.

C. Splices in below grade wiring within handhole:
    1. Raychem GTAP 1 or GTAP 2, or approved equal

D. Hand Holes:
    1. Type A: 12 x 12 x 12 stackable Quazite Box PC1212BA12 (all applications).
        a. Cover PC1212HA0017 stamped “Electric”.

E. Booster Pump and Booster Pump Disconnect:
    1. Booster pump if required shall be sized as needed to provide sufficient flow for proper operation of irrigation system.
    2. The disconnecting means shall be lockable and meet the requirements of NEC Article 110-25.

F. Devices
    1. Receptacles and switches shall be Spec grade.

**PART 3 EXECUTION**

3.01 GENERAL

A. All installations shall meet or exceed NEC requirements.

B. All circuits exceeding 50VAC to ground shall be installed in conduit.

3.02 CONNECTION TO SOURCE OF POWER

A. The source of power shall be indicated in the Drawings.

B. Connection of conduit to the service cabinet shall be made by one of the following methods:
    1. Core Drilling the concrete base and installing a new conduit.
    2. Utilization of an existing empty conduit.
    3. Installation of a handhole in an existing conduit with wiring. Existing wire shall be replaced with new wire as required to return the circuit to operation. The new wire shall be of the same size and type as the existing wire.
    4. Knock out holes are not allowed in the service cabinet to allow for the connection of a conduit.

3.03 CONNECTION TO IRRIGATION CONTROLLER:

A. Final connection shall be made by cord and plug to a GFCI receptacle installed inside the irrigation cabinet.


© 2026 City of Cottage Grove, Minnesota

3.04 BOOSTER PUMP AND BOOSTER PUMP DISCONNECT:

A. A disconnecting means for the booster pump shall be installed on the exterior of the booster pump cabinet . Installation of the disconnecting means shall meet the requirements of NEC Article 430 Part IX. Disconnecting means located at locations other than on the exterior of the booster pump cabinet shall not be considered as meeting the requirements of NEC Article 430.102.
   1. NEC Articles 430.109(A)(2), 430.109(A)(3), 430.109(A)(4), 430.109(C)(1), and 430.109(C)(2) shall not apply to this section
   2. For the purpose of this section the disconnecting means shall be considered to require serve or maintenance when energized and the installation shall meet the requirements of the NEC Table 110.26(a)(1).

B. Only the booster pump circuit shall enter or leave the disconnect.

C. Demonstrate operation of booster pump at irrigation system startup.

**END OF SECTION**


© 2026 City of Cottage Grove, Minnesota

# SECTION 26 56 00

# EXTERIOR LIGHTING

## PART 1 GENERAL

1.01 SUMMARY

A. Section Includes:
1. Provide and install materials and equipment for construction of lighting systems in accordance with the National Electrical Code (NEC), MnDOT Specifications, and as specified in the Contract.

B. Related Sections
1. Section 00 31 00 - Project Management and Coordination.

1.02 PRICE AND PAYMENT PROCEDURES

A. Measurement and Payment:
1. Non-Metallic Conduit: Measurement will be per lineal foot for each size and type from center of handhole, base, service cabinet, or connection to existing conduit to center of handhole, base, service cabinet, or connection to existing conduit along the centerline of the conduit as installed. Payment at the Bid Unit Price shall be full compensation for the cost of conduit, conduit sleeves, couplings, elbows, bushings, sealing around the conduit where it enters a pull box, grounding and bonding, and all other items required for complete installation.
2. Underground Wire: Measurement will be per lineal foot for each size and type from center of handhole, base, or service cabinet to center of handhole, base, or service cabinet along the centerline of the wire installed. Payment at the Bid Unit Price shall be full compensation for the cost of wire, pulling, splicing, terminals, making required connections, slack required at connections, testing, and all other items required for complete installation.
3. Lighting Service Cabinet: Measurement will be per each. Payment at the Bid Unit Price shall be full compensation for the cost of panel board enclosure, circuit breakers, switches, relays, photoelectric control, internal wiring, service entrance circuit, mounting hardware, grounding, painting, sealing around cabinet base, numbering of the service cabinet, permits, all other items required for complete installation, and coordination with Xcel for power.
4. Handhole: Measurement will be per each by type. Payment at the Bid Unit Price shall be full compensation for handhole, frame and cover, excavation, aggregate drain bed, backfilling, sealing conduit entrances, surface restoration, and all other items required for complete installation.
5. Lighting Unit (City supplied Light Pole and Luminaire): Measurement will be per each by type. Payment at the Bid Unit Price shall be full compensation for lamps, assembly and installation of the luminaire and pole base, pickup and delivery of pole and luminaire to place of installation, pole bracket, inline fuse, wiring between pole base and luminaire, luminaire wire holder, splice to power circuit, numbering of the light pole, luminaire labeling, and all other items required for complete installation.
6. Light Foundation: Measurement will be per each by type. Payment at the Bid Unit Price shall be full compensation for excavation, concrete, reinforcement, anchor rods, ground rod,


© 2026 City of Cottage Grove, Minnesota

ground lead, grounding connections, conduit elbows and bushings, and other items required for complete installation.

7. Equipment Pad: Measurement will be per each. Payment at the Bid Unit Price shall be full compensation for excavation, aggregate, concrete, reinforcement, anchoring hardware within the pad, conduits within the pad, ground rods, grounding connections, mounting brackets, mounting hardware, and all other items required for complete installation.
8. Remove and Replace Luminaire: Per each, according to type and will include all costs associated with removing and disposing of existing luminaire, furnishing new luminaire, installation of new luminaire, and all other items required for complete installation.
9. All other Work and costs of this Section shall be incidental to the Project and included in the Total Base Bid.

1.03 REFERENCES

A. National Electrical Code (NEC).

B. Minnesota Department of Transportation “Standard Specifications for Construction”, 2025 Edition (MnDOT Spec.):
   1. 2471 - Structural Metals.
   2. 2545 - Lighting Systems.
   3. 3101 - Portland Cement.
   4. 3113 - Admixtures for Concrete.
   5. 3803 - Non-Metallic Rigid PVC and HDPE Conduit.
   6. 3815 - Cables and Conductors.

C. American Society of Testing Materials (ASTM):
   1. C260 - Air-Entraining Admixtures for Concrete.

1.04 SUBMITTALS

A. Conduit.

B. Conductors and splices for above and below ground.

C. Handhole.

D. Service Cabinet.

E. MnDOT approved design mix for each concrete mix designation used.

1.05 SEQUENCING AND SCHEDULING

A. Coordinate with Xcel for all new services or switching of service from existing to new service cabinet prior to preconstruction meeting. Provide schedule as part of overall schedule at preconstruction meeting.

B. Concrete curb and gutter construction precedes street light system installations.


© 2026 City of Cottage Grove, Minnesota

C. Provide 48 hour notice to Engineer prior to installations to allow for staking the locations of poles, handholes and cabinets.

D. Concrete shall be placed in the form the same day the form is placed for all pour in place light foundations.

E. Install conduit crossings prior to curb placement when replacing existing curb or installing new curb at the point of the crossing as part of the project.

## PART 2 PRODUCTS

2.01 MATERIALS

A. Non-Metallic Conduit: Provide conduit in accordance with MnDOT Spec. 3803 except as modified herein:
   1. Except where required by the NEC conduct shall be type PVC schedule 40.
   2. Conduit shall be 1.5 inch unless otherwise noted.
      a. The portion of conduit that feeds receptacle stations or landscape/accent lighting may be reduced in size, but not less than .75 inch.

B. Conductors:
   1. Provide conductors in accordance with MnDOT 3815 except as modified herein:
      a. Unless otherwise noted, all conductors shall be Copper, Type XHHW-2
      b. Conductors shall be sized according to National Electric Code and verified through voltage drop calculations except as noted:
         1) Minimum size phase conductor for lighting system shall be #6 wire gauge.
         2) Minimum size equipment ground wire conductors shall be #8 wire gauge.
         3) Minimum size conductor feeding receptacle stanchions or landscape/accent lighting shall be #10 wire gauge.
         4) Conductors within lighting unit extending from the fuseholder to the luminaire, including the equipment grounding conductor, shall be #12 gauge stranded XHHW
            a) The grounding electrode conductor shall be green or bare, stranded or solid, and no smaller than #6 gauge wire.
            b) If installed wholly within the lighting unit the grounding electrode conductor may be reduced to #8 gauge wire.
      c. Phase conductors shall be color coded
         1) Phase conductors for 240 volt circuits shall be red and black.
         2) Phase conductors for 240/120 volt circuits shall be red, black, and white.
         3) Phase conductors supplying receptacles, pole, or ground mounted shall be blue and white.

C. Above grade wiring within lighting unit:
   1. Fuses shall be dual element time delay, FNM5 or equal.
   2. Pole fuse holders for 240 volt circuits shall be Bussmann Hex-AA or equal, for 120 volt circuits shall be Bussmann Heb AA or equal.
      a. Tape used around fuse holder shall be 3M 33Plus or equal.
   3. Splicing shall be Burndy 1PL4-X, or approved equal.
      a. The number of terminals shall not be less than the number of Conductors.


© 2026 City of Cottage Grove, Minnesota

b. In the event a conductor larger than #4 is used, the corresponding insulated splice block of the manufacturer's series shall be provided.

D. Below grade wiring within handhole:
   1. Splicing shall be Raychem GTAP 1 or GTAP 2, or approved equal.
      a. Splices that contain no conductor larger than #10 AWG may utilize Ideal Gel Filled Wire Connectors.

E. Service Cabinet (120/240 VAC) – Feed Point, Povolny Specialties or approved equal:
   1. Nema 3 R, neoprene gasket on doors, 1/8" aluminum 5052-H32, anodized 30MIN, clear, non-corroding hardware, ETL listed in accordance with UL508A.
   2. Dimensions of box 17" x 17" x 55" height.
   3. 4" divider, rear lower section of cabinet, full width utility wire way.
   4. Photocell.
   5. 7" x 7" 178MM Lexan Window.

F. Handholes:
   1. Type A: 13 x 24 x 12 stackable Quazite Box PG1324BA12 (all applications).
      a. Cover PG1324CA0041 stamped "STREET LIGHTING".
   2. Type B: 12 x 12 x 12 stackable Quazite Box PC1212ZA12 (only allowed when located behind pole Type F or reconstruct when specifically identified in Drawings).
      a. Cover PC1212CA0041 stamped "STREET LIGHTING".

G. Light Foundation:
   1. All foundations shall be poured in place except design F foundations.
   2. Concrete to Conform to MnDOT Spec. 2461, except as modified herein:
      a. Portland Cement: Conform to MnDOT Spec. 3101:
         1) Type 3 air-entraining concrete produced by using Type I Portland Cement.
      b. Air-Entraining Admixtures: Conform to MnDOT Spec. 3113:
         1) Conforming to ASTM C260.
         2) Not to be added to the concrete mixtures in the field without approval from Engineer.
      c. Mix Designation and Classification for Concrete foundations.
         1) Equipment Pad and Light Pole Foundation: Mix No. 3G52.
   3. Reinforcing to Conform to MnDOT Spec. 3301.
   4. Design P and E anchor bolt circle dimension and projection shall be modified to meet lighting unit manufacturers specifications.

H. Equipment Pad:
   1. Concrete to conform to 2.01.G.2.

I. Lighting Unit Provided by the City.
   1. Light Pole Type A Residential (LGT-7)
      a. Holophane Standard Pole
         1) RTA 1650C PLN NDR BZ 35HH FBC RFD2043
         2) 3" x 5"- Handhole Base Cover
         3) Dark Anodized Duranodic Bronze Finish
         4) Full spun aluminum cover


© 2026 City of Cottage Grove, Minnesota

b. Holophane Taft LED Luminaire
    1) PTE2 P20 40K MVOLT GL3 BZ BL
    2) 55W LED
    3) Auto-sensing (120-277) 50/60 HZ voltage
    4) Type III glass reflector
    5) Painted Standard Holophane Bronze Finish
    6) Ball final
    7) Standard solid rib
2. Light Pole Type P1 Ravine Single LED Fixture 14 Foot (LGT-8)
    a. Holophane Columbia
        1) Aluminum Sitelink Pole
        2) CLA 14 SL5 17D C04 BZ
    b. Holophane Granville Luminaire
        1) Classic Utility LED3 Version
        2) GVD3 P20 40K MVOLT MS GL3 BZ RB ST TBZ
3. Light Pole Type P2 Ravine Single LED Fixture 18 Foot (LGT-9)
    a. Holophane Columbia
        1) Aluminum Sitelink Pole
        2) CLA 18 SL5 17D C04 BZ
    b. Holophane Granville Luminaire
        1) Classic Utility LED3 Version
        2) GVD3 P20 40K MVOLT MS GL3 BZ RB ST TBZ
4. Light Pole Type E2 Ravine Double LED Fixture 14 Foot (LGT-10)
    a. Holophane Columbia
        1) Aluminum Sitelink Pole
        2) CLA 14 SL5 17D C04 BZ
    b. 2-Holophane Granville Luminaire
        1) Classic Utility LED3 Version
        2) GVD3 P20 40K MVOLT MS GL3 BZ RB ST TBZ
        3) Cincinnati Cross Arms (two at 180°) CSC 15 2A TN SL5 BZ
5. Light Pole Type E3 Ravine Double LED Fixture 18 Foot (LGT-11)
    a. Holophane Columbia
        1) Aluminum Sitelink Pole
        2) CLA 18 SL5 17D C04 BZ
    b. 2-Holophane Granville Luminaire
        1) Classic Utility LED3 Version
        2) GVD3 P20 40K MVOLT MS GL3 BZ RB ST TBZ
        3) Cincinnati Cross Arms (two at 180°) CSC 15 2A TN SL5 BZ
6. Light Pole Type A2 Cobra Head LED Fixture 20 Foot (LGT-12)
    a. Holophane Standard Pole
        1) Autobahn Series
        2) RTA 2050E PLN NDR BZ – FBC RFD2043
        3) Full spun aluminum cover
    b. Holophane Standard Mast Arm
        1) 1MA-BZ
        2) Dark Anodized Duranodic Bronze Finish


© 2026 City of Cottage Grove, Minnesota

c. Luminaire-American Electric
    1) Autobahn Series, LED Version, 45 inch slip over arm
    2) ATB2 40X MVOLT R2 BZ NL AO RFD330774
    3) 88w 11.7k lm
7. Light Pole Type E4 Cobra Head LED Fixture 30 Foot (LGT-13)
    a. Holophane Standard Pole
        1) RTA3070E PLN NDR BZ FBC RFD2043
        2) Dark Anodized Duranodic Bronze Finish
        3) Full spun aluminum cover
    b. Holophane Standard Mast Arm
        1) 1MA-BZ
        2) Dark Anodized Duranodic Bronze Finish
    c. Luminaire-American Electric
        1) Autobahn Series, LED Version
        2) ATB2 40X MVOLT R2 BZ NL AO FRD330774
        3) 88w 11.7k lm
8. Light Pole Type F1 LED Lighting Unit 31 Foot 11 Inches (LGT-14)
    a. Holophane Wadsworth
        1) Aluminum Sitelink Pole
        2) WDA 30 SL6 17D C05 BZ
        3) Provide hole for receptacle and removable cover
    b. Holophane Memphis Luminaire
        1) Utility Tear Drop LED 2
        2) MPL2 P50S 40K MVOLT BG3 QSM BZ SS BHDF QSM BZ
        3) 30” Dia. Shallow Skirt, Bronze, Bowl Glass
        4) Boston Harbor Style Arm, Model: BHC 72IN 1A TN SL6 BZ
        5) Boston Harbor Style Decorative Arm Fitter Model: BHDF13 200 BZ

## PART 3 EXECUTION

### 3.01 CONSTRUCTION REQUIREMENTS

A. General
1. Locating of public utilities within the project limits in accordance with section 01 31 00 Project Management and Coordination shall be incidental to the project and included in the Total Base Bid.

B. Service Cabinet:
1. Contractor shall furnish and install a Service Cabinet, for supplying power to an electric lighting system.
2. Supplying power to an electric lighting system, on an equipment pad concrete foundation at the location indicated in the Plans.
3. The Service Cabinet shall be modified as needed to include the appropriate number and size of circuits to make the lighting systems operational.
    a. 240 volt 30 AMP branch circuits required.
        1) If the street light pole is equipped with a pole mounted receptacle, 240/120 volt 30 AMP circuits may be utilized.


© 2026 City of Cottage Grove, Minnesota

C. Conductors:
   1. All below grade conductors must be located in conduit.
   2. Conductor color code shall be maintained for the entire length of the circuit.
   3. Sufficient slack shall be provided in all conductors to allow removal from the pole of all fuseholders and splices.
   4. Insulation damage shall be replaced with a new conductor running the full length between two pull points (light pole, handhole, or cabinet). No taping of damaged areas is permitted.

D. Conduit:
   1. Install with a minimum of 24" cover measured from top of conduit to finished grade.
   2. When installed parallel to curb install between 12 inches and 24 inches from the back of curb unless specifically identified otherwise on drawings or approved by Engineer.
   3. Street crossings:
      a. Shall occur at intersections only unless otherwise approved by Engineer.
      b. Shall be installed perpendicular to the centerline of the street being crossed.
      c. Shall not be installed within 6' of private utility crossings.
   4. Shall not be installed within another conduit of larger diameter.
   5. Install such that each run shall contain no more than a combined total of 270 degrees of bends regardless of radius size of bends.

E. Handholes:
   1. Handholes to be installed in green space only.
   2. When installed along roadside, the roadside edge of the handhole shall be located between 12 inches and 18 inches from the back of curb.
   3. Type F1 Light Pole requires installation of a handhole adjacent to light pole foundation which will include ground rod.

F. Below Grade Cable Splices:
   1. Below Grade cable splices shall be used in all handholes (only) to provide for the lighting as specified in the Plan.
   2. Below Grade cable splices must be located within a handhole. Direct bury splices are not allowed.
      a. Provide adequate slack in the conductor assembly to allow for each individual conductor to extend at least 2 feet above the top of the handhole.
      b. Maintain proper circuit color identification within each splice.

G. Light Foundation:
   1. Foundations installed adjacent to curb shall be installed with the center of the foundation 3' from the back of curb.
   2. Foundations shall be located no closer than 5' from any hydrant, valve, or manhole unless otherwise approved by Engineer.
   3. Conduits within light foundation
      a. At the last foundation in a line one conduit shall be stubbed out to allow for future expansion. The stub conduit shall be the same size as the conduit being utilized.
      b. No more than 3 conduits shall be located within one light foundation.
      c. Conduit projection shall be no less than 2 inches and no more than 3 inches above the top of the light foundation.


© 2026 City of Cottage Grove, Minnesota

4. The threaded portion of anchor bolts protruding above the lighting foundation shall have an anti-seize compound applied prior to the installation of the light pole.
5. All light foundations, except type F, shall contain a 0.625 inch diameter grounding rod as identified in the standard detail plates that projects no less than 2 inches and no more than 4 inches above the top of the light foundation.
6. Forming material shall extend the entire depth of the foundation.
    a. Forming material shall be removed after concrete has cured from the top of the foundation to a depth of 3" below finished grade.
7. Excavation of foundations shall be completed with Auger unless otherwise noted:
    a. The auger size shall correspond with the diameter of the specific light foundation being utilized except as noted.
        1) For precast Type F foundations the auger diameter shall be 36 inches.
    b. Other means of excavation may be needed when utilities are located within 2 feet of light foundation or if large rocks are encountered.
8. Finishing
    a. All concrete foundations shall have a broom finish.
    b. Foundations for pole types A1, A2, and E4 shall be finished with a 0.75 inch crown.
    c. Foundations for pole types P1, P2, E2, E3, and F1 shall be finished with a flat and level top.

H. Equipment Pad:
1. Equipment pad shall be located no further than 15 feet from source of power.
2. Use the equipment pad mentioned for mounting the lighting service cabinet and meter socket.
3. Construct the mounting bracket assembly for the service equipment using 5/8 inch (9.5 mm) bolts anchored in the equipment pad.
4. Install one spare conduit of each type and size utilized for possible future expansion.
    a. If equipment pad is located within an outlot or park property install two additional 0.75 inch diameter conduit stubs for future expansion.

I. Lighting Unit:
1. Light poles and luminaires are available at the City of Cottage Grove Public Work Facility.
2. Contractor shall load and deliver to the project site.
3. Contractor shall install the light poles and luminaires as required by the project.
4. Lighting units shall be installed plumb.
    a. Install lighting units on leveling nuts for pole types A1, A2, and E4.
    b. Install pole types P1, P2, E2, E3, and F1 directly on light foundations without leveling nuts.
        1) MnDOT approved shims may be used for leveling, but total height of shims shall not exceed 0.25 inches.
5. Each lighting unit shall have a fuseholder and fuses installed at the base of the pole
6. Each pole shall be grounded at the pole handhole location to the grounding rod with a minimum #8 conductor.
7. A grounding conductor shall be installed from the base of the pole to the luminaire.
    a. Run a separate ground wire for the receptacle (if present) from the base of the pole to the receptacle.
8. No splicing is allowed on any of the conductors located within the pole between the luminaire and the fuseholder or splice located in base of the pole.
9. Splicing materials within the pole shall be arranged in a way that will not allow water to pool in the devices.


© 2026 City of Cottage Grove, Minnesota

10. All fasteners of the pole, luminaire, mast arms or twin arms shall have anti-seize compound applied prior to installation.
11. Luminaires shall be installed such that both the access cover/door and the street side optics face the street.
12. Poles shall be installed such that the handhole at the bottom of the pole is on the side of the pole opposite the street.

J. Above Ground Wiring:
   1. MnDOT Spec. 2545.3.F.2, except as modified here in:
      a. Fuses, fuse holders, and splicing materials in accordance with 2.01.C

K. Arc-Flash Hazard Warning Labeling:
   1. Calculate available fault current in accordance with MnDOT Spec. 2545.3.K.1.
   2. Establish available fault current and apply the appropriate label as follows.
   3. Use the current edition of NFPA 70E "Standard for Electrical Safety in the Workplace" to determine the required PPE category and personal protective equipment.
   4. If the available fault current is ≤ 25,000 amps, then provide a label with the following information shown in Example 1.

*Example 1*

**Warning**
**Arc Flash Hazard**
**Appropriate PPE Required**
**Arc Flash Boundary** **19 Inches**
**Arc Flash PPE Category** **1**
**Working Distance** **18 Inches**
**Arc Flash Personal Protection Equipment (PPE)**
List required clothing, **Min Arc Rating of 4 cal/cm²**, and protective equipment in accordance with the PPE Table from the current edition of NFPA 70E Standard for Electrical Safety in the Workplace
**Equipment ID**

   5. If the available fault current is > 25,000 amps:
      a. Determine PPE requirements in accordance with the current edition of NFPA 70E Standard for Electrical Safety in the Workplace, and
      b. Provide a label with the following information shown in Example 2.
         1) Fill in the **____ (blank)** with the required arc-flash PPE category and arc-flash boundary distance.

*Example 2*

**Warning**
**Arc Flash Hazard**
**Appropriate PPE Required**
**Arc Flash Boundary** **Feet**
**Arc Flash PPE Category** **_____**
**Working Distance** **18 Inches**
**Arc Flash Personal Protection Equipment (PPE)**


© 2026 City of Cottage Grove, Minnesota

List required clothing, **Min Arc Rating of ___ cal/cm²**, and protective equipment in accordance with the PPE Table from the current edition of NFPA 70E Standard for Electrical Safety in the Workplace
**Equipment ID**

6. Install labels on the front of the dead front door of the electric service cabinet at eye level.

L. Electric Service:
   1. Proposed source of power addresses are identified in the Plan.
   2. Coordinate the installation of Electrical Service, provide power to the service cabinets.
   3. Fees for the "Application for Electrical Service" and payment to the Electric Utility for providing the electrical service connections is the responsibility of the Contractor.
   4. Secure approval from the Engineer for any changes to the Electrical Service as reflected in the Plan.
   5. No measurement will be made of the various items that constitute Electrical Service. Electrical Service shall be incidental to the service cabinets and shall include all compensation in full for all costs incidental thereto, including, but not limited to providing power to service cabinets, power company fees, Power Utility Company.

M. Compliance with NEC Article 110.24:
   1. Provide fault current calculations in accordance with 2545.3.U.

**END OF SECTION**


© 2026 City of Cottage Grove, Minnesota

# SECTION 31 10 00

# SITE CLEARING

## PART 1 GENERAL

1.01 SUMMARY

A. Section Includes:
   1. Removal and trimming of vegetation and trees and stripping and stockpiling of sod and topsoil.

1.02 PRICE AND PAYMENT PROCEDURES

A. Measure and Payment:
   1. Payment at the Unit Price will be considered compensation in full for all work necessary to complete the Bid Item in full.
   2. Clearing and Grubbing:
      a. Measurement will be by physical count of each tree cleared and grubbed having a diameter of more than 3 inches at a point 24 inches above the ground surface. Payment will constitute compensation in full for all removal, disposal work, and costs.
      b. Measurement will be by lump sum for all Project Clearing and Grubbing. Payment will constitute compensation in full for all removal, disposal work, and costs.
      c. Measurement will be by acre of trees cleared and grubbed. Measurements shall be made horizontally to points 10 feet outside the trunks of trees or stumps on the perimeter of the area being measured. Any separate area smaller than 1/20 acre will be considered to be 1/20 acre:
         1) Whenever isolated trees or stumps are removed outside the areas designated to be cleared and grubbed, the acre payment will be made by:
            a) Each tree measuring more than 3 inches, but less than 36 inches in diameter, at a point 2 feet above the ground surface, and each stump measuring more than 3 inches, but less than 36 inches, at the point of cutoff will be considered as being 1/20 acre.
            b) Each tree or stump measuring 36 inches or more in diameter will be considered as being 1/10 acre.
         2) Payment will constitute compensation in full for all removal, disposal, and costs.
   3. Clearing:
      a. Measurement will be by physical count of each tree cleared having a diameter of more than 3 inches at a point 24 inches above the ground surface. Payment will constitute compensation in full for all removal, disposal, and costs.
      b. Measurement will be by acre of trees cleared. Measurements shall be made horizontally to points 10 feet outside the trunks of trees or stumps on the perimeter of the area being measured. Any separate area smaller than 1/20 acre will be considered to be 1/20 acre.
   4. Grubbing:
      a. Measurement will be by physical count of each tree or stump grubbed. Payment will constitute compensation in full for all removal, disposal, and costs.
      b. Measurement will be by acre of trees or stumps grubbed. Measurements shall be made horizontally to points 10 feet outside the trunks of trees or stumps on the perimeter of


© 2026 City of Cottage Grove, Minnesota

the area being measured. Any separate area smaller than 1/20 acre will be considered to be 1/20 acre.

5. Salvage and Respread Topsoil: Measurement will be per square yard of surface area by depth of topsoil to be respread. Payment will include vegetation removal, striping existing topsoil, stockpiling, and respreading material, Excavation of topsoil in excess of the volume to be respread shall be included under the Excavation – Common Bid Item.
6. Sod Removal: This Work is considered incidental to the other Work of the Contract.
7. Windfall/Deadfall Removal: This Work shall be incidental to the Project with no direct compensation.
8. Brush Removal: This Work shall be incidental to the Project.
9. Stripping and Stockpiling of Soil: This Work shall be considered incidental to other Work in the Contract.
10. Stripping and Stockpiling of Soil: This Work shall be considered incidental to other Work in the Contract.
11. Any tree trimming necessary to perform other work in the Contract shall be considered incidental.
12. All other Work and costs of this Section shall be incidental to the Project and included in the Total Base Bid.

1.03 REFERENCES

A. Minnesota Department of Transportation “Standard Specifications for Construction”, 2025 Edition (MnDOT Spec.):
   1. 2101 - Clearing and Grubbing.

1.04 DEFINITIONS

A. Brush: All bushes, shrubs, and other vegetation that can be cut with a brush scythe or mowing machine, including small isolated trees having a diameter of 4 inches or less at a point 2 feet above the ground surface.

B. Clearing: Cutting, removing, and disposing of trees, shrubs, bushes, windfalls, and other vegetation in the designated areas.

C. Grubbing: Removing and disposing of stumps, roots, and other remains in the designated areas.

D. Tree Trimming/Pruning: Cutting broken, damaged, or obstructing branches and installing wound dressing. Includes the uplift of branches along the roadway to allow for street construction.

1.05 SITE CONDITIONS

A. Work consists of removing trees generally along the easement lot lines designated for utilities.

B. The Drawings do not specifically show all trees to be removed or transplanted.

C. Protect specimen trees close to Work that are designated to remain but may be damaged by Work.


© 2026 City of Cottage Grove, Minnesota

1.06 SEQUENCING AND SCHEDULING

A. Install temporary erosion control measures prior to Work of this Section.

B. Complete before or sufficiently ahead of on-going rough grading, excavation, backfill, and compacting for utilities.

**PART 2 PRODUCTS**

2.01 WOUND DRESSING

A. Asphalt base tree paint.

B. Other acceptable materials per Engineer's approval.

**PART 3 EXECUTION**

3.01 GENERAL

A. Review removals in the field with the Engineer prior to doing Work. Clearing limits will be clearly marked by the Engineer.

B. Assume multiple mobilizations for the Work of this Section.

C. Stockpile soil to eliminate contamination with other on site materials.

3.02 CLEARING AND GRUBBING

A. Clearing Trees: Cut off, remove, and dispose of trees and brush in the areas designated as a clearing operation. When grubbing is not required, the point of cut off shall be 6 inches above the ground.

B. Clearing Brush: Cut even with the ground surface.

C. Grubbing: Remove brush, stumps, roots, and other remains to a minimum depth of 6 inches below subgrade for all proposed sections.

D. Backfill all depressions resulting from the grubbing operations in accordance with Section 31 23 00.

3.03 TRIMMING AND PRUNING

A. As directed by the Engineer, trim trees that are to be saved but interfere with the proposed construction. Paint all cuts with wound dressing.

3.04 STRIPPING

A. After clearing and grubbing have been completed, strip sod and topsoil to a line 2 feet outside of areas to be occupied by structures, walks, roadways, areas to be excavated or filled, and other areas shown.


© 2026 City of Cottage Grove, Minnesota

1. Do not strip within the drip line (branch spread) of trees identified to remain.

B. As directed by Engineer, stockpile sufficient topsoil to re-spread at a uniform depth of 6 inches to all disturbed areas identified for seeding or sodding.

3.05 SALVAGE AND RESPREAD TOPSOIL

A. Strip in accordance with 3.04.A.
   1. Strip existing topsoil to a depth to stockpile a sufficient volume of material to be respread at depth as specified.

B. Stockpile stripped topsoil at locations within the project grading limits.

C. Re-spread at a uniform depth as specified at locations within the project grading limits after grades have been verified by Engineer.

3.06 DISPOSAL LIMITATIONS

A. Conform to MnDOT Spec. 2101.3.D, or as modified herein:

B. Dispose of all cleared and grubbed material and debris outside the right-of-way at a location selected by the Contractor, except for trees and logs identified to be salvaged.

C. Disposal site should be a properly designated landfill area as determined by appropriate governmental agencies or lands under direct control of the Contractor.

D. Stripped materials not used for embankments shall be disposed off the site.

E. On Site burial of any debris is not permitted.

F. On Site burning of debris is not permitted.

3.07 PROTECTION

A. Conduct operations so as not to damage surrounding private property.

B. Protect trees intended to be saved from injury or defacement during operations:
   1. Restrict widths of utility trenches.
   2. Provide protective bracing, sheeting, or box to insure safe Work conditions as incidental to Contract.

C. Exercise care to keep salvaged material as clean as possible during operations.

D. Install temporary fencing at the construction limits and drip lines of trees to be protected prior to any construction activities in order to protect vegetation.

**END OF SECTION**


© 2026 City of Cottage Grove, Minnesota

# SECTION 31 23 00

# EXCAVATION AND FILL

## PART 1 GENERAL

### 1.01 SUMMARY

A. Section Includes:
   1. Excavation and fill for roadways, foundations, channels, ponds, and other areas.

B. Related Sections:
   1. Section 01 57 13 - Temporary Erosion and Sediment Control.
   2. Section 02 41 13 - Selective Site Demolition.
   3. Section 31 10 00 - Site Clearing.
   4. Section 31 23 13 - Subgrade Preparation.
   5. Section 33 05 06 - Trenching and Backfilling.
   6. Section 32 92 00 - Turf and Grasses.

### 1.02 PRICE AND PAYMENT PROCEDURES

A. Measurement and Payment:
   1. Measurement and payment shall be at the Bid Unit Price consistent with MnDOT Spec. 2106.4 and 2106.5, except as modified in the following.
   2. Excavation - Common (EV) (P): Measurement by volume of material in its original position, based on pre-construction digital surface model and design digital surface model. Quantity shall be calculated and computed by the surface comparison completed by Engineer. Payment will include excavation, testing, and disposal of material. Placement of suitable excavated material on site shall be included under the Common Embankment Bid Item.
      a. Excavation and disposal if existing topsoil will be included within the Excavation – Common quantity when a Salvage and Respread Topsoil Bid Item is not provided in the Bid Form.
      b. When a Salvage and Respread Topsoil Bid Item is provided and the existing onsite topsoil is in excess of the volume needed to be respread, excavation and disposal of the excess existing topsoil will be included in the Excavation – Common Bid Item.
      c. Excavation – Common will include material within trail and sidewalk sections when no separate bid item is provided for Excavation – Common Trail or Sidewalk.
   3. Excavation - Common (EV) – Trail or Sidewalk: Measurement by volume of material in its original position, based measurements performed by the Engineer at the time of construction. Payment will include excavation, testing, and disposal of material.
   4. Excavation - Subgrade (EV): Measurement by volume of material in its original position, based on pre-construction and post-construction cross sections taken by the Engineer. Quantity shall be calculated by the average end area method. Payment will include excavation, testing, and disposal of material.
   5. Excavation - Subgrade (EV) – Trail or Sidewalk: Measurement by volume of material in its original position, based on pre-construction and post-construction cross sections taken by the Engineer. Quantity shall be calculated by the average end area method. Payment will include excavation, testing, and disposal of material.


© 2026 City of Cottage Grove, Minnesota

6. Common Embankment (CV) (P): Measurement by volume of material compacted in place based on pre-construction digital surface model and the design digital surface model. Quantity shall be calculated and computed by surface comparison completed by Engineer. Payment will include all costs related to testing, delivery, placement, compaction, and final finishing.
7. Aggregate Backfill (Modified): Measurement by the ton of material compacted in place as determined from weight tickets delivered to the Engineer. Payment will include all costs to performing the Work in accordance with these Specifications, including shaping, grading, compacting and tolerancing, and include all costs related to furnishing and installing the material complete in place as specified:
    a. If the aggregate backfill material is being wasted or placed excessively thick, the Owner reserves the right to deduct quantities that are in excess of plan thickness. Said quantities shall be based on material weighing 110 pounds per square yard of area per inch of thickness.
8. Aggregate Backfill (Modified) – Trail or Sidewalk: Measurement by the ton of material compacted in place as determined from weight tickets delivered to the Engineer. Payment will include all costs to performing the Work in accordance with these Specifications, including shaping, grading, compacting and tolerancing, and include all costs related to furnishing and installing the material complete in place as specified:
    a. If the aggregate backfill material is being wasted or placed excessively thick, the Owner reserves the right to deduct quantities that are in excess of plan thickness. Said quantities shall be based on material weighing 110 pounds per square yard of area per inch of thickness.
9. Pond Liner (CV): Measurement by volume of material compacted in placed based on pre-construction cross sections and design grades. Payment will include all costs related to testing, delivery, placement, compaction, and final finishing.
10. Boulevard Grading: Payment for this final Boulevard Grading, including placing, grading, and compacting topsoil, shall be made under the Bid Item included in the Bid Form based upon the number of hours actually spent grading:
    a. Initial backfilling of the curb is considered incidental to the installation of the curb.
    b. Payment for furnishing of topsoil will be made under the Topsoil Borrow Bid Item, per Section 32 92 00.
11. Boulevard Stripping: Measurement per hour of time actually spent stripping, hauling, and disposing of boulevard sod. Payment will include all costs related for performing the work as specified.
12. Haul Excess Reclaimed Material Offsite (LV): Measurement by loose volume of material hauled offsite by means of a truck count. Payment will include all costs related to removing and disposing of material off the Site.
13. Payment for Placing Topsoil Borrow will be made in Section 32 92 00 – Turf and Grasses.
14. All other Work and costs of this Section shall be incidental to the Project and included in the Total Base Bid.

## 1.03 REFERENCES

A. Minnesota Department of Transportation “Standard Specifications for Construction”, 2025 Edition (MnDOT Spec.):
    1. 2106 - Excavation and Embankment – Compacted Volume Method.
    2. 3149 - Granular Material.


© 2026 City of Cottage Grove, Minnesota

3. 3877 - Topsoil Material.

1.04 SUBMITTALS

A. Submit the following items consistent with Section 01 33 00:
   1. Gradation tests for borrow materials.
   2. Pond liner gradation and permeability testing.

1.05 DEFINITIONS

A. The definitions of the different classifications of excavation and borrow material shall conform to MnDOT Spec. 2106.1 and 2106.2, or as modified herein:
   1. Excavation - Common: In locations where the design cross section is in a cut section, excavation – common shall be classified as all excavation above the grading grade that has not been classified as another form of excavation in this section. In areas where the design cross section is in a fill section, common excavation shall consist of excavation of topsoil. Excavation - common shall not include payment for pavement removal when a separate bid item is present.
   2. Excavation - Subgrade: Excavation below the grading grade that has not been classified as another form of excavation in this Section.
   3. Topsoil borrow material shall conform to Section 32 92 00 – Turf and Grasses.

1.06 QUALITY ASSURANCE

A. Assist testing laboratory by excavating for density tests. Assist testing laboratory with obtaining material samples.

1.07 SEQUENCING AND SCHEDULING

A. Perform excavation as soon as possible after sewer and water construction.

B. Submit pond liner permeability test results for either on site material or imported material prior to placement.

C. Complete subgrade for streets, driveways, walks, and parking lots immediately after trench backfill and compaction.

D. Provide notice by 3:00 P.M. of any aggregate backfill placement for the following day, to allow time for scheduling subgrade inspection and compaction tests prior to any aggregate backfill being placed.

E. Aggregate backfill placement shall not occur until the Boulevard has been graded to within 6 inches of finished grade per typical section.

F. Complete finish grading of turf areas within 5 calendar days after backfill.


© 2026 City of Cottage Grove, Minnesota

## PART 2 PRODUCTS

2.01 MATERIALS

A. Embankment Materials: Conform to MnDOT Spec 2106.2.B except as modified:
   1. Common Embankment: Conform to MnDOT Spec 2106.2.B.1 except as modified:
      a. Soil which is capable of attaining specified compaction levels, excluding soils which contain organics, contain debris or are potentially expansive (CH or MH per the Unified Soil Classification System).
      b. Materials Containing recycled asphalt or recycled concrete are not allowed without prior approval from Engineer.

B. Aggregate Backfill (Modified):
   1. Only naturally occurring sand meeting the following requirements:
      a. Uniformly blended.
      b. Non-manufactured.
      c. Uncrushed.
      d. Mineral materials.
   2. Conform to the following gradation requirements or a deduct will be required per price adjustment tables found on the Grading and Base website.

| Sieve Size | Percent Passing |
|---|---|
| 3 Inch | 100 |
| 2 Inch | 80 to 100 |
| #40 | 0 to 50 |
| #200 | 0 to 12 |

C. Pond Liner:
   1. Maximum permeability of $1x10^{-6}$cm/s.
   2. Minimum of 15% passing the #200 Sieve.

## PART 3 EXECUTION

3.01 GENERAL

A. Conform to MnDOT Spec. 2106.3.A, or modified herein:
   1. Establish traffic control prior to excavations.
   2. Establish the specified erosion control devices according to Section 01 57 13 prior to all excavations.
   3. Notify utility companies of progress schedule so they can accomplish relocations, removals, and holding of lines.
   4. Perform removals consistent with Section 02 41 13.
   5. Strip topsoil consistent with Section 31 10 00.
   6. No borrow areas are allowed within City right-of-way.


© 2026 City of Cottage Grove, Minnesota

## 3.02 PREPARATION OF EMBANKMENT

A. Conform to MnDOT Spec. 2106.3.D, or as modified herein:
   1. Engineer's approval is required of all areas where preparation work has been performed prior to the placement of the embankment or fill material.
   2. Where embankment is to be constructed over swamp, marsh, or other locations where the foundation material is unstable, the foundation shall be excavated to remove all or part of the unstable material.

## 3.03 EXCAVATION OPERATIONS

A. Conform to MnDOT Spec. 2106.3.E, or as modified herein:
   1. Perform excavations to the alignment, cross section, and grade as shown on the Drawings and staked by the Engineer.
   2. Excavation of unstable material below grade shall be done under the direction of the Engineer as the subsurface conditions are disclosed.
   3. Remove muck excavation material so as to minimize disruption to the bottom of the excavation.
   4. Notify Engineer immediately of any large boulders or ledge rocks encountered so proper measurement or profile can be made for pay quantities.
   5. No solid rock will be allowed within 12 inches of the subgrade.
   6. Provide and maintain temporary drainage facilities until permanent facilities are completed.
   7. After the roadway excavation is complete and prior to backfilling operations, notify the Engineer 24 hours in advance so all excavation areas can be cross-sectioned to determine quantities.
   8. Cut, fill, and grade Site to elevations and contours shown on the Drawings with allowances for pavements, topsoil, and structures.
   9. Mining of material in boulevards for use in street construction will not be allowed.
   10. Excess reclaimed material above and beyond that is needed for the aggregate base shall be properly disposed of at a location off of the Site:
      a. The resulting reclaimed material could contain diesel range organics (DRO) which must be disposed of in accordance with MPCA requirements.

B. On street rehabilitation projects, excavation and disposal of the existing boulevard material to allow for the placement of the new concrete curb and gutter, and specified depth of topsoil/compost shall be considered incidental to the concrete curb removal Bid Item.

## 3.04 DISPOSITION OF EXCAVATED MATERIAL

A. Conform to MnDOT Spec. 2106.3.J, or as modified herein:
   1. No disposition of bituminous millings will be permitted, unless thoroughly mixed with other on Site materials.
   2. If a reclamation process is used to remove pavement, the resulting reclaimed material could contain diesel range organics (DRO) which must be disposed of in accordance with MPCA requirements.


© 2026 City of Cottage Grove, Minnesota

## 3.05 PLACING EMBANKMENTS

A. Conform to MnDOT Spec. 2106.3.F:
   1. Topsoil placement shall conform to Section 32 92 00.

## 3.06 COMPACTING EMBANKMENTS

A. Conform to MnDOT Spec. 2106.3.G, or as modified herein:
   1. Compaction required for embankment materials shall conform to the Specified Density Method (nuclear) with the testing location and rates being determined by the Engineer.
   2. Backfilling of embankments shall be performed using on Site materials: If the Contractor is unable to meet the specified density requirements using that material due to excess moisture content, they shall immediately notify the Engineer of this condition.
   3. Recognize that inclement weather (sometimes heavy) occurs during the construction season and be responsible for protecting the moisture condition of soils during the construction phase. Such protection measures include sloping of exposed surfaces to promote runoff (avoid ponding) and compacting exposed surfaces prior to rain events to minimize infiltration.
   4. Compaction required for aggregate backfill materials shall conform to the Specified Density Method (nuclear) with the testing location and rates being determined by the Engineer.

## 3.07 FINISH OPERATIONS

A. Conform to MnDOT Spec. 2106.3.I, or as modified herein:
   1. Finish grading of granular material, select granular material, and aggregate backfill prior for placement of an aggregate base shall conform to MnDOT Spec. 2112.3.E.
   2. Grading of the soils beneath the proposed topsoil shall be reviewed and approved by the Engineer prior to the start of the topsoil placement.

## 3.08 POND LINER

A. Grading of soils beneath pond liner shall be reviewed and approved by the Engineer prior to the start of liner placement.

B. Place pond liner a minimum of one foot thick or as indicated on the Drawings:
   1. Place pond liner so the top of the pond liner is one foot below pond bottom elevation.
   2. Place one foot of topsoil above the pond liner.
   3. Where riprap is present place liner a minimum of one foot thickness below riprap.

C. Pond liner shall extend from pond bottom up pond slopes to an elevation one foot above the normal water level.

## 3.09 BOULEVARD GRADING

A. Backfill Curb After It Has Hardened:
   1. Leave the boulevards within a tolerance of 0.3 feet plus or minus of finish grade prior to installation of private underground utilities.
   2. Compact the backfill material directly behind the concrete curb to meet the requirements of “Quality Control Compaction."


© 2026 City of Cottage Grove, Minnesota

B. Following installation of private underground utilities by others, re-grade entire boulevard area to the right-of-way, including the re-spreading of topsoil stockpiles located adjacent to the boulevard areas:
   1. It is intended that this work be done with 1 small dozer.
   2. The extent of the final work and the hours of work shall be reviewed with the Engineer prior to any grading being done.
   3. Compaction is required as part of the backfill procedure.

C. Reconstruction and Final Street Improvement Projects:
   1. Grade, shape, and prepare boulevards disturbed by construction for topsoil and sod placement.
   2. Place, grade, and compact topsoil, minimum 6 inches thick.

3.10 BOULEVARD STRIPPING

A. Final Street Improvement Projects:
   1. Strip sod adjacent to bituminous curb prior to reclamation process.
   2. Haul and dispose of stripped material off of the Site.

3.11 FIELD QUALITY CONTROL

A. The Owner shall have an independent testing laboratory perform the following tests. The location of the tests shall be determined by the Engineer:
   1. Aggregate Backfill – Modified:
      a. 1 gradation test per 1,000 tons of material placed.
      b. 1 density test, monitored by Specified Density Method (nuclear), per 2,000 square yards of street constructed.
   2. Pond Liner Material:
      a. 1 permeability test per pond of in place pond liner material.

**END OF SECTION**


© 2026 City of Cottage Grove, Minnesota

This Page Left Blank Intentionally

# SECTION 31 23 13

# SUBGRADE PREPARATION

## PART 1 GENERAL

### 1.01 SUMMARY

A. Section Includes:
   1. Grading, shaping, and compacting subgrade prior to placing an aggregate base or aggregate backfill materials.

### 1.02 PRICE AND PAYMENT PROCEDURES

A. Measurement and Payment:
   1. Subgrade Preparation: Measurement by the square yards and shall be based on a width of 1 foot behind the back of curb, except as modified below. Payment at the Unit Price shall include all costs related to performing the Work in accordance with these Specifications, including shaping, grading, compacting, and tolerancing.
   2. Subgrade Preparation - Trail or Sidewalk: Measurement by the square yards and shall be based on a width of 1 foot behind the edge of trail or sidewalk, except as modified below. Payment at the Unit Price shall include all costs related to performing the Work in accordance with these Specifications, including shaping, grading, compacting, and tolerancing.
   3. Geotextile Fabric: Measurement by the square yard of area covered with no allowance for overlaps, according to type installed. Payment will include all costs related to furnishing and placing fabric.
   4. All other Work and costs of this Section shall be incidental to the Project and included in the Total Base Bid.

### 1.03 REFERENCES

A. Minnesota Department of Transportation “Standard Specifications for Construction”, 2025 Edition (MnDOT Spec.):
   1. 1103 - Definitions.
   2. 2106 - Excavation and Embankment – Compacted Volume Method.
   3. 2108 - Geosynthetic Construction Materials.
   4. 2111 - Test Rolling.
   5. 2112 - Subgrade Preparation.
   6. 3733 - Geosynthetic Materials.

### 1.04 SEQUENCING AND SCHEDULING

A. Perform subgrade preparation prior to placement of the aggregate base or aggregate backfill material.

B. Complete subgrade preparation for streets, driveways, walks, and parking lots immediately after installation of pipe as part of trench backfill and compaction when project includes pipe installation.


© 2026 City of Cottage Grove, Minnesota

1.05 DEFINITIONS

A. Subgrade Preparation – grading, shaping, and compacting existing soil below the top of subgrade as defined in MnDOT Spec. 1103.

1.06 SUBMITTALS

A. Submit Manufacturer's Certificate of Compliance for the following items:
   1. Geotextile Fabric.

**PART 2 PRODUCTS**

2.01 GEOTEXTILE FABRIC

A. Provide geotextile meeting the requirements of MnDOT 3733.2.

B. MnDOT Type 7 – Needle-punched nonwoven meeting the requirements of Table 3733.2-1.

**PART 3 EXECUTION**

3.01 GENERAL

A. Subgrade preparations shall be performed to produce the required density, grade, and cross-section.

B. At the end of each day and prior to placement of aggregate base, the contractor shall eliminate surface indentations, including those caused by sheepsfoot rollers and tractor cleats, and roll the surface with a steel wheel or rubber tire roller.

3.02 PREPARATION

A. If the subgrade is unstable and the instability is due to excessive moisture, the subgrade shall be scarified and dried over a reasonable time period. When the material has reached acceptable moisture limits, the material shall be returned to the roadbed and compacted into place to the proper elevation, If the material continues to be unstable, the Engineer may authorize the removal of the undesirable material as subgrade excavation.

B. Test roll subgrade conforming to MnDOT Spec. 2111, or as modified herein:
   1. The equipment used for test rolling shall be a tandem truck with a gross weight of 45,000 pounds.
   2. If rutting is greater than 1/2 inch, subgrade excavation and aggregate backfill will be required.

C. Once the subgrade has been test rolled and accepted by Engineer, no traffic or construction equipment shall be permitted to operate directly on the subgrade without the prior approval of Engineer.

D. In the event that inclement weather occurs after a test roll, and prior to placement of the aggregate base or backfill material, the test roll shall be voided and a new test roll shall be performed.


© 2026 City of Cottage Grove, Minnesota

3.03 COMPACTION

A. Conform to MnDOT Spec. 2106.3.G.1, or as modified herein:
   1. For the Specified Density Method, the Engineer will sample and test the soils to determine the Maximum Density and Optimum Moisture.
   2. The Owner will have an independent testing laboratory perform the following test, as minimum. The tests will be taken on the compacted subgrade at the location and testing rates designated by the Engineer. Nuclear density testing shall be considered an approved method:
      a) 1 density test for every 2000 square yards of street in the upper 3 feet of subgrade (100 percent density zone) at varying distances either side of centerline. Note: This is done if subgrade excavation is not required.
      b) 1 density test for every 500 lineal feet of trail or sidewalk in the upper 3 feet of subgrade (100 percent density zone) at varying distances either side of centerline. Note: this is done if subgrade excavation is not required.

3.04 FINISH OPERATIONS

A. Subgrade tolerance shall conform to MnDOT Spec. 2112.3.E.

3.05 GEOTEXTILE FABRIC

A. Install in accordance with MnDOT 2108.3A and as described herein:
   1. If multiple pieces of geotextile are required, overlap joints between separate pieces of fabric a minimum of 2’.

**END OF SECTION**


© 2026 City of Cottage Grove, Minnesota

This Page Left Blank Intentionally

# SECTION 32 11 23

# AGGREGATE BASE COURSES

## PART 1 GENERAL

### 1.01 SUMMARY

A. Section Includes:
   1. Requirements for aggregate base course on a prepared subgrade and gravel driveway patching.

B. Related Sections:
   1. Section 31 23 00 - Excavation and Fill.
   2. Section 32 23 13 - Subgrade Preparation.

### 1.02 PRICE AND PAYMENT PROCEDURES

A. Conform to MnDOT Spec. 2211.4 and 2211.5 For Measurement and Payment except as modified herein:
   1. Aggregate Base, Virgin Class 5: This Bid Item is for aggregate base placed in the streets and aggregate base placed below new concrete driveways, concrete medians, concrete approach noses, and valley gutters as described in section 32 13 14. Measurement per ton of material compacted in place as determined from weight tickets delivered to the Engineer.
   2. Aggregate Base, Virgin Class 5 - Trail or Sidewalk: Measurement per ton of material compacted in place as determined from weight tickets delivered to the Engineer.
   3. Finish Grading – Street: Measurement per square yard of surface area to be paved. Payment will include all costs related to grading, shaping, compacting, and tolerancing aggregate materials including roll testing of existing or supplemented aggregate base.
   4. Finish Grading – Trail or Sidewalk: Measurement per square yard of surface area to be paved or covered with concrete sidewalk. Payment will include all costs related to grading, shaping, compacting, and tolerancing aggregate materials including roll testing of existing or supplemented aggregate base.
   5. Shoulder Base Aggregate, Virgin Class 2: Measurement per ton of material compacted in place as determined from weight tickets delivered to the Engineer.
   6. Patch Gravel Driveway: Measurement per ton of material compacted in place as determined from weight tickets delivered to the Engineer. Payment will include all costs related to patching the driveway, including excavation and aggregate base.
   7. If the aggregate base course material is being wasted or placed excessively thick, the Owner reserves the right to deduct quantities that are in excess of Drawing thickness. Said quantities shall be based on material weighing 110 pounds per square yard of area per inch of thickness.
   8. All other Work and costs of this Section shall be incidental to the Project and included in the Total Base Bid.

### 1.03 REFERENCES

A. Minnesota Department of Transportation “Standard Specifications for Construction”, 2025 Edition (MnDOT Spec.):


© 2026 City of Cottage Grove, Minnesota

1. 2211 - Aggregate Base.
2. 2221 - Shoulder Base Aggregate.
3. 3138 - Aggregate for Surface and Base Courses.

1.04 SUBMITTAL

A. Submit gradation report on sample of aggregate base to be used.

B. Submit aggregate quality testing per MnDOT 3138.2.B virgin aggregates.

1.05 DEFINITIONS

A. Finish Grading: Grading, shaping, compacting, and tolerancing of new gravel base, existing gravel base, reclaimed material, existing gravel base that has been supplemented with Aggregate Base, or reclaimed material that has been supplemented with Aggregate Base.

1.06 SEQUENCING AND SCHEDULING

A. Construct aggregate base only after all of the following have been completed:
   1. Top of subgrade or surface of aggregate backfill has been approved by Engineer.
   2. If aggregate backfill is required, a minimum 400 lineal feet of roadway has been placed, compacted, shaped, graded, and checked for conformance to line and grade tolerances.
   3. The Boulevard has been graded to within 6 inches of finished grade per typical section.

B. Provide notice by 3:00 P.M. of any aggregate base placement for the following day, to allow time for scheduling aggregate backfill compaction testing prior to any aggregate base being placed.

C. Finish grading of gravel base prior to placing bituminous surface shall not be performed until initial curb backfilling is complete.

**PART 2 PRODUCTS**

2.01 MATERIALS

A. Aggregate Base within Street:
   1. Conform to MnDOT Spec. 3138.2.B Virgin class 5 aggregate, except as modified herein:
      a. The City reserves the right to reject the material in lieu of a deduct.
   2. Conform to MnDOT Spec. 3138.2.E, Table 3138.2-3 for gradation requirements.

B. Aggregate Base within Trail, Sidewalk, or paved driveway:
   1. Conform to MnDOT Spec. 3138.2.B Virgin class 5 aggregate, except as modified herein:
      a. The City reserves the right to reject the material in lieu of a deduct.
   2. Conform to MnDOT Spec. 3138.2.E, Table 3138.2-3 for gradation requirements.

C. Aggregate surface driveway and shoulder base aggregate:
   1. Conform to MnDOT Spec. 3138.2.B Virgin class 2 aggregate.
   2. Conform to MnDOT Spec. 3138.2.E, Table 3138.2-3 for gradation requirements.


© 2026 City of Cottage Grove, Minnesota

## PART 3 EXECUTION

### 3.01 GENERAL

A. Finish Grading:
   1. Supplement existing gravel base with Aggregate Base, Class 5, as required to meet specified tolerances.
   2. Grading and Shaping Aggregate Base shall be considered grading, shaping, compacting, and tolerancing material from 0 to 2 inch depth.

### 3.02 PREPARATION

A. Street:
   1. Prepare the subgrade in accordance with Section 31 23 13.
   2. Prepare the surface of the aggregate backfill in accordance with Section 31 23 00.

B. Complete roll testing of existing or supplemented aggregate materials after initial grading is complete to within 1 inch of final grade, after initial compaction, and prior to final tolerancing:
   1. The equipment used for test rolling shall be a tandem truck with a gross weight of 45,000 pounds.
   2. If rutting is greater than 1/2 inch or cracking of the surface occurs, excavation and subgrade corrections may be required as determined by Engineer.

### 3.03 CONSTRUCTION REQUIREMENTS

A. Conform to MnDOT Spec. 2211.3, except as modified herein:
   1. Compaction shall conform to 2211.3.D.2.c, Table 2211.3-3 Penetration Index Method or Specified Density (100% Standard Proctor Density) as directed by the Engineer.
   2. Pneumatic Roller is required for compaction on all aggregate base courses with recycled bituminous (e.g. reclamation projects, etc.).
   3. Install aggregate base in accordance with details on Drawings.
   4. Deliver weight tickets to Engineer daily.
   5. Patch gravel driveways to the thickness shown on the Drawings.

### 3.04 FIELD QUALITY CONTROL

A. The Owner shall perform Agency Verification Testing (VT) by use of an independent testing laboratory to sample the aggregate base materials, determine the moisture/density relationships, gradations, and perform field moisture tests and field density (DCP) tests at locations determined by Engineer. The following are minimum testing rates:
   1. 1 gradation test per 500 ton of material placed.
      a. Contractor shall provide split sample of aggregate base material for gradation test.
   2. 1 density test per 2,000 square yards of street gravel surface, minimum 3 DCP tests per Project.
   3. 1 density test per every 500 feet of trail or sidewalk, minimum 3 DCP tests per Project.
   4. 1 moisture test per Project during compaction.
   5. Density testing (DCP) at the curb lines prior to concrete curb and gutter placement is at the discretion of the Engineer.


© 2026 City of Cottage Grove, Minnesota

B. The Owner shall perform Agency Verification Testing (VT) by use of an independent testing laboratory to sample reclaimed gravel base materials, determine the moisture/density relationships, gradations, and perform field moisture tests and field density tests (DCP) at locations determined by Engineer. The following are minimum testing rates:
   1. 1 gradation test per 500 ton of material placed.
      a. Contractor shall provide split sample of reclaimed gravel base material for gradation test.
   2. 1 density test per 2,000 square yards of gravel surface, minimum 3 DCP tests per Project. Full depth reclamation (Shear Strength Method) DCP testing if depth of reclaimed gravel is greater than 8 inches.

C. The Owner will not allow a "Roll Test" as a method of measuring acceptance of the final aggregate base surface.

D. Line and Grade Tolerance for Aggregate Base or Reclaimed Aggregate Base: The final aggregate base or reclaimed aggregate base surface will be checked for conformance to specified tolerances by the "stringline" method. Grade shall be $\pm$ 0.03 feet of grade. Notify Engineer a minimum of 4 hours (one half day) prior to paving to allow for the "Field Quality Control" tolerance check.

E. Line and Grade Tolerance for Trail and Sidewalk: The final aggregate base surface needs to be graded and toleranced. Grade tolerance shall be ±3/8 inch as measured with a 10 foot straight edge. Notify Engineer a minimum of 4 hours (one half day) prior to paving to allow for the "Field Quality Control" tolerance check.

3.05 PROTECTION

A. Protect aggregate base until it is covered by surface pavement.

B. Keep aggregate base free of ruts and irregularities until covered by surface paving.

C. Place water on aggregate base for dust control as required, to eliminate nuisance conditions for adjacent properties.

**END OF SECTION**


© 2026 City of Cottage Grove, Minnesota

# SECTION 32 11 25

# FULL DEPTH RECLAMATION

## PART 1 GENERAL

1.01 SUMMARY

A. Section Includes:
   1. Reclamation of the existing bituminous surfacing and a portion of the underlying existing base material.

B. Related Sections:
   1. Section 31 23 00 - Excavation and Fill.
   2. Section 31 23 13 - Subgrade Preparation.

1.02 PRICE AND PAYMENT PROCEDURES

A. Measurement and Payment
   1. Full Depth Reclamation: Measurement per square yard, based on the width of the existing pavement, regardless of depth of reclamation required:
      a. Payment for leveling and compaction of the material immediately after it is reclaimed is to be included in the Bid Unit Price per square yard.
      b. The Bid Unit Price is to include the motor grader and any water necessary to maintain the reclaimed material until paved.
   2. Finish grading and tolerancing of reclaimed material prior to paving shall be per Section 32 11 23.
   3. All other Work and costs of this Section shall be incidental to the Project and included in the Total Base Bid.

1.03 REFERENCES

A. Minnesota Department of Transportation “Standard Specifications for Construction”, 2025 Edition (MnDOT Spec.):
   1. 2215 - Reclamation.

1.04 SEQUENCING AND SCHEDULING

A. Reclamation will be performed at locations shown on the drawings.

B. Provide 48 hours’ notice prior to beginning the reclamation process.

C. Initial grading/leveling and interim compaction of the reclaimed material by a motor grader and rubber-tired roller is required immediately following the reclamation process.

D. Reclamation and base stabilization process can not be performed while rain is occurring.

E. Maintain access to all residents during the reclamation and tolerancing process.


© 2026 City of Cottage Grove, Minnesota

## PART 2 PRODUCTS

2.01 MATERIALS

A. Reclaimed material – Pulverized Aggregate:

1. Pulverize the full depth of the existing bituminous material and underlying base materials until 100-percent passes the 3 inch sieve size and 97-percent or more pass the 1.5 inch sieve size.

B. Contractor's Gradation Quality Control (QC):

1. The Contractor shall be responsible for gradation control by testing the reclaimed material at a rate of 1 test per 5,000 square yards, with a minimum 1 test per day.
2. Provide the Engineer a verification sample for Quality Assurance testing at the discretion of the Engineer. This shall be a split sample taken by the Contractor.

## PART 3 EXECUTION

3.01 GENERAL

A. Create an aggregate base course composed of the existing bituminous pavement and a portion of the existing underlying base material.

B. The reclamation process cannot be performed during rain events. Compact reclaimed material prior to rain events.

C. Disposal of the oversize bituminous pieces, within the Right-of-Way, will not be permitted. Any oversize bituminous pieces found in the Right-of-Way shall be removed by the Contractor and at the Contractor's expense.

D. Access to all residents shall be maintained during the reclamation and tolerancing process.

E. The resulting reclaimed material could contain diesel range organics (DRO) which must be disposed of in accordance with MPCA requirements.

3.02 EQUIPMENT

A. Conform to MnDOT Spec. 2215.D.1 except as modified herein:
   1. Reclaiming Machine:
      a. Equipment to be hydrostatically driven.
      b. Computerized operation controls.
      c. Rotating cutter drum to operate parallel to the existing road surface, providing a uniform section across the entire roadway.
      d. Capable of cutting up to a 12 inch depth in 1 pass.
      e. Equipment exhaust must be on the top and not the side.


© 2026 City of Cottage Grove, Minnesota

3.03 PREPARATION

A. Remove grass and other vegetation from the edge of the existing pavement to prevent contamination of the pulverized material during the reclamation process. Remove this material per Section 31 23 00.

3.04 PLACING AND COMPACTING

A. Finish grading, compaction, and tolerancing of the reclaimed material shall conform to Section 32 11 23.

B. Control moisture content of reclaimed material 3 to 7-percent by dry weight during the initial leveling/compaction and final shaping and tolerancing process as incidental to reclamation.

C. The maximum reclaimed layer thickness for compaction shall be 8 inches.

D. Removal of excess reclaimed material shall be per Section 31 23 00.

3.05 THICKNESS REQUIREMENTS

A. Typical reclaimed section varies. Refer to typical sections on Drawings.

**END OF SECTION**


© 2026 City of Cottage Grove, Minnesota

This Page Left Blank Intentionally

# SECTION 32 12 01

# FLEXIBLE PAVING

## PART 1 GENERAL

1.01 SUMMARY

A. Section Includes:
1. Hot plant mixed asphalt-aggregate mixtures for wearing and non-wearing courses.
2. Bituminous tack coat.

B. Related Sections:
1. Section 01 57 13 - Temporary Erosion and Sediment Control.
2. Section 02 41 13 - Selective Site Demolition.
3. Section 31 23 00 - Excavation and Fill.
4. Section 32 11 23 - Aggregate Base Courses.
5. Section 33 05 18 - Adjust Miscellaneous Structures.

1.02 PRICE AND PAYMENT PROCEDURES

A. Measurement and Payment:
1. Method of measurement and payment shall conform to MnDOT Spec. 2360.4 and 2360.5, except as modified herein.
2. Bituminous Material for Tack Coat: Measurement per gallons based on volume at 60 degrees F.
   a. Payment for bituminous material used for Tack Coat includes compensation in full for all costs incidental to the furnishing and application at the Bid Unit Price per gallon.
   b. Cleaning of all debris and dirt from the previous bituminous surfaces prior to placement of Tack Coat is included in the Bid Unit Price for Tack Coat.
   c. Payment for the accepted quantity of asphalt emulsion shall be at the Contract price per unit of measure for undiluted asphalt emulsion.
   d. Payment for tacking exposed edges of existing bituminous surfaces and concrete curb and gutter in conjunction with initial lift placement is considered incidental to the placement of the initial lift.
3. Bituminous Mixtures: Measurement by mix design based on actual tons placed. Payment shall be made in accordance with the acceptance and payment schedules provided in MnDOT Spec. 2360.
   a. The Bid Unit Price includes both the bituminous course mixture and asphalt binder material.
   b. Partial payment will not exceed 70-percent of the total calculated payment until the required testing and product documentation is received and found to be acceptable to the Engineer.
   c. Payment for the bituminous final lift will not be made until the corresponding signing and pavement markings have been installed.
4. Preparation of Bituminous Initial Lift consists of final clean up of the bituminous initial lift prior to paving final lift:
   a. Street Sweeper with power pickup broom, including operator: per hour
   b. Skidsteer (Bobcat), including operator: per hour


© 2026 City of Cottage Grove, Minnesota

5. Patch Bituminous Driveway and Patch Bituminous Trail: Measurement per square yard. Payment will include all costs related to patching the driveway or trail to the thicknesses shown on the Drawings, including excavation, subgrade preparation, aggregate base, and the bituminous wearing course:
    a. Saw cutting just prior to paving will be paid separately, per Section 02 41 13.
    b. Removing bituminous pavement will be paid separately, per Section 02 41 13.
    c. The Bid Unit Price includes both the bituminous course mixture and asphalt binder material.
6. Remove and Replace Bituminous Driveway and Remove and Replace Bituminous Trail: Measurement per square yard. Payment will include all costs related to patching the driveway or trail to the thicknesses shown on the Drawings, including sawcutting just prior to paving per Section 02 41 13, removing bituminous pavement per Section 02 41 13, excavation and subgrade preparation, aggregate base, and the bituminous wearing course.
7. Patch Bituminous Street: Measurement per square yard. Payment will include all costs related to patching the street to the thicknesses shown on the Drawings, including excavation, aggregate backfill, Class 5 aggregate base, bituminous initial lift(s), tack coat(s), and bituminous final lift:
    a. Saw cutting just prior to paving will be paid separately, per Section 02 41 13.
    b. Removing bituminous pavement will be paid separately, per Section 02 41 13.
8. Remove and Replace Bituminous Street: Measurement per square yard. Payment will include all costs related to patching the street to the thicknesses shown on the Drawings, including sawcutting just prior to paving per Section 02 41 13, removing bituminous pavement per Section 02 41 13, excavation and subgrade preparation, aggregate backfill, Class 5 aggregate base, bituminous initial lift(s), tack coat(s), and bituminous final lift.
9. Bituminous Wedge: Measurement per ton. Payment will include all costs related to constructing the Bituminous Wedge per the Standard Detail and as specified:
    a. Silt fence placed behind the curb and adjacent to the Bituminous Wedge will be paid per Section 01 57 13.
10. Bituminous sawcutting or milling that is required for joint construction will be paid per Section 02 41 13:
    a. Removal of temporary bituminous ramps is considered incidental to the sawing bituminous pavement or milling Bid Item.
11. Bituminous Incentive and Disincentive Allowance: The allowance indicated in the Bid Form is maximum incentive based on the Engineer's estimated unit prices for the various bituminous bid items. The final incentive and disincentive will be based on the actual unit prices in the contract award. Payment will be based on the actual incentive or disincentive determined under MnDOT Spec. 2360.5.B.13, for bituminous placed per Paragraph 3.07. Example: if the allowance in the Bid Form is $10,000 and the incentive is determined by the Engineer to be $2,500, a quantity of 0.25 will be paid under the lump sum bid item, resulting in a total price of $2,500 (i.e. $10,000 x 0.25 = $2,500). Similarly, if a disincentive is determined to be $1,525, a quantity of -0.1525 will be paid, resulting in an amount of -$1,525 (i.e. $10,000 x -0.1525 = -$1,525).
12. All other Work and costs of this Section shall be incidental to the Project and included in the Total Base Bid.


© 2026 City of Cottage Grove, Minnesota

1.03 REFERENCES

A. Minnesota Department of Transportation “Standard Specifications for Construction” 2025 Edition (MnDOT Spec.):
   1. 2360 - Plant Mixed Asphalt Pavement.
      a. Within this document replace the words “Department Bituminous Engineer” or "District Materials Engineer” with the word “Engineer".
   2. 2357 - Bituminous Tack Coat.
   3. 3139 - Graded Aggregate for Bituminous Mixtures.
   4. 3151 - Bituminous Material.

B. American Society of Testing and Materials (ASTM):
   1. ASTM D2950 - Standard Test Method for Density of Bituminous Concrete in Place by Nuclear Methods.

1.04 SUBMITTALS

A. Submit mixture design report to the Engineer. Conform to MnDOT Spec. 2360.2.E.5.b(2), 2360.2.E.9, 2360.2.F, and 2360.2.G.8.

B. Submit mix design report for all projects, regardless of the size of the project.

C. Submit Q/C results in accordance with MnDOT Spec. 2360.2.G.1, 2360.2.G.4 and MnDOT’s most recent Materials Control Schedule.

D. Submit Q/C testing for Class B aggregates included in mix designs based on the following schedule:
   1. For every 5,000 tons of bituminous mixture placed on the project, or for mix placed 30 days after the previous submittal, perform and submit the following Q/C testing from Class B aggregate stockpile:
      a. Soundness Testing (ASTM C 88)
      b. Loss by Abrasion and Impact (ASTM C 131)
   2. Aggregate testing requirements shall be submitted on a per project basis. Individual tests and submittals are required for each project.

E. Submit final lift paving schedule while providing a continuous operation to the extent feasible.

F. Submit a copy of documented results from daily checks on the Reference Site Daily Record and individual lot testing results on the Density Lot Testing Record forms the end of each day of testing.

1.05 DEFINITIONS

A. “Special” Mixture: A bituminous mixture that does not allow the use of Recycled Asphalt Pavement (RAP), MnDOT 3139.2.A.2.k; Recycled Asphalt Shingles (RAS), MnDOT 3139.2.A.2.h; Ash, MnDOT 3139.2.A.2.j; and Crushed Concrete and Salvaged Aggregate, MnDOT 3139.2.A.2.i.

B. Irregular Paving:
   1. The entire circular portion “bubble” of a cul-de-sac.


© 2026 City of Cottage Grove, Minnesota

2. Portion of pavement that extends beyond the standard width of a street based on the width shown on the typical sections provided in the plan set.

C. Street Paving: Paving of any portion of roadway except those defined as Irregular Paving.

1.06 SEQUENCING AND SCHEDULING

A. Engineer will schedule Correlation Process for Nuclear Gauge Density Testing with the Prime Contractor's or Paving Subcontractor's (if appropriate) designated Quality Control Tester and Owners Verification Tester a minimum of 1 week prior to the first day of paving.

B. Prime Contractor is responsible for scheduling an onsite pre-paving meeting with the Owner, Engineer, Paving Subcontractor (if appropriate), including the Paving Forman a minimum 24 hours prior to the paving operations.

C. Aggregate base and concrete curb and gutter to be completed and approved by the Engineer prior to placement of bituminous surfaces.

D. Concrete pedestrian ramps to be completed and approved by the Engineer prior to placement of bituminous trail.
   1. Concrete pedestrian ramps must be protected during paving of bituminous trail. Method of protection must be approved by the Engineer.

E. Concrete valley gutters to be completed and approved by the Engineer prior to placement of bituminous street.
   1. Concrete valley gutters must be protected during paving of bituminous street. Method of protection must be approved by the Engineer.

F. Provide notice by 2:00 P.M. the day prior to any bituminous placement to allow for scheduling of the following activities. Notice must include mix designation, start time of placement, plant producing mix, and Foreman onsite during paving operations:
   1. Aggregate base DCP tests, per Section 32 11 23, prior to any bituminous being placed.
   2. Inspection of paving operations by a City representative, no paving will be allowed or accepted without inspection.
   3. Bituminous plant testing if required.

G. Provide 48 hour notice for scheduling and noticing of the residents prior to paving operations.

H. Sweeping of pavement must occur immediately prior to placement of the final lift. Swept surface must be approved by the Engineer prior to the placement of the final lift.

I. Adjust structures prior to placement of bituminous wedge or bituminous final lift as specified in Section 33 05 18.

J. Bituminous Wedge Placement:
   1. Minimum 6 days after placement of first lift of bituminous pavement.
   2. Completed prior to Private Utility Installation.

K. Sidewalks, trails, and final restoration must be completed prior to final lift paving.


© 2026 City of Cottage Grove, Minnesota

L. Sequence Work to avoid construction traffic on the final lift.

## PART 2 PRODUCTS

2.01 MATERIALS

A. Mixture Designation: Conform to MnDOT Spec. 2360.1.B, except as modified in the drawings and Bid Form:
   1. Residential Streets (Low Volume):
      a. Wearing Course (Final Lift) = SPWEA330C.
      b. Wearing Course (Initial Lift) = SPWEA330C.
   2. Trails: Wearing Course = SPWEA230C.
   3. Driveways and Patching: Wearing Course = SPWEA230B.
   4. Bituminous Wedge: Non Wear Course = SPNWA230B.

B. Conform to MnDOT Spec. 2360.2 and 3139 except as modified herein:
   1. Recycled Asphalt Shingles (RAS), MnDOT Spec. 3139.2.A.2.h, are not allowed in the wearing course mixtures.
   2. Ash, MnDOT Spec. 3139.2.A.2.j will not be allowed in the wearing course mixtures.
   3. Warm Mix Asphalt (WMA) will not be accepted as an approved alternative to HMA.
   4. See paragraph 1.05A for “Special” Mixture definition.

C. Bituminous Tack Coat:
   1. Bituminous Material: Conform to MnDOT Spec. 2357:
      a. Emulsified Asphalt, Cationic, CSS-1 or CSS-1h.

D. Asphalt Binder Material: Conform to MnDOT Spec. 2360.1.B, Table 2360.1-2; MnDOT Spec. 3151 and as identified in the Mix Designation.

E. Mixture Design: Conform to MnDOT Spec. 2360.2.E.

## PART 3 EXECUTION

3.01 GENERAL

A. Conform to the requirements of MnDOT Spec. 2360.3, except as modified herein.

B. Review the proposed paving sequence with the Engineer prior to placement of each bituminous course (lift).

C. The proposed sequence shall address the: longitudinal seams, compaction, traffic control, hauling routes, and placement of pavement markings.

D. Preparation of Bituminous Lower Lift:
   1. Final clean up of the bituminous surface with the use of a power pickup broom and front end loader/skidsteer.
   2. Street sweeping operations must include the application of water to effectively make the pavement free and clear of material and debris to allow for successful application and


© 2026 City of Cottage Grove, Minnesota

adhesion of bituminous tack coat to the pavement. The appropriate amount of water shall be applied, eliminating dust as part of the sweeping operations.

E. Bituminous Driveway Patching:
   1. Paving requires two lifts.
   2. Tack coat prior to final lift.
   3. Protection of concrete curb, incidental to placing both lifts of bituminous.

F. Adjust structures conforming to the requirements of Section 33 05 18:
   1. Have a valve wrench on site during the paving operations for the purpose of final adjustments to the valve boxes to meet the specified tolerances. This work shall be considered incidental to the valve box adjustment bid item.

G. Joints: Where new construction meets existing bituminous surfacing, the existing surface shall be uniformly milled or saw-cut straight, and bituminous tack coat applied prior to placement of each bituminous course (lift):
   1. For joint construction, an existing bituminous surface shall be considered to include any bituminous surface not paved on the same day as the new construction. The Owner may require milling or sawcuting on surfaces paved the same day, if, in the opinion of the Owner, the mix has cooled to a point where a new milled or sawed edge is necessary
   2. Construct 2 foot wide (min.) ramp where new construction does not match existing construction (i.e. initial lift to final lift).
   3. Longitudinal Joints: Utilize Maryland Joint construction method.

H. Finish bituminous surface shall be flush with concrete surface at curb depression for pedestrian curb ramps.

3.02 RESTRICTIONS

A. Conform to MnDOT Spec. 2360.3.A, except as modified herein.

B. Following the street sweeping operations, the condition of the pavement surface must be approved by the Engineer prior to paving.

C. Existing bituminous surfaces must be dry prior and during placement of any bituminous pavements.

D. Bituminous surfaces shall not be constructed on frozen gravel base.

E. Final Lift shall not be placed when the air temperature in the shade and away from artificial heat is 50 degrees or less.

3.03 EQUIPMENT

A. Conform to MnDOT Spec. 2360.3.B.

B. Nuclear Gauge:
   1. Troxler, Humboldt, Seaman gauge capable of completing thin lift density testing using the backscatter density method.


© 2026 City of Cottage Grove, Minnesota

2. Contractor must provide a minimum of two gauges designated for the project.
3. Nuclear gauges must be calibrated by the manufacturer or an approved calibration service within 12 months of its use on the project. Retain a copy of the manufacturer's calibration certificate with the gauge.
4. Contractor must conform to all Minnesota Department of Health requirements.

3.04 REQUIRED PERSONNEL

A. Contractor must designate a Quality Control Tester to perform Nuclear Gauge Density Testing. Quality Control Tester must be able to provide proof of a minimum of 25 hours field experience performing Nuclear Gauge Testing.

3.05 TREATMENT OF SURFACE

A. Bituminous Tack coat shall conform to MnDOT Spec. 2357, except as modified herein.

B. Restrictions:
1. The tack coat shall not be applied when the road surface is wet or when the weather conditions are unsuitable.
2. The area for tack coat application shall be limited as directed by the Engineer.
3. The Contractor shall have sole responsibility of claims of tack coat on personal property due to lack of notification or signage of the area being tack coated.
4. No tack coat prior to placement of bituminous wedge.
5. Cleanup of tack coat material tracked and build up onto adjacent roadway surfaces by truck hauling shall be performed on a daily basis, or as directed by the Engineer.

C. Distributor Equipment: Conform to MnDOT Spec. 2360.3.B.2.d, except as modified herein:
1. The Engineer at anytime can direct the Contractor to perform test strip to determine if the equipment is applying the specified application rate for the emulsion. All cost associated with this test strip is considered incidental to the tack application.

D. Road Surface Preparation: Conform to MnDOT Spec. 2357.3.C.

E. Application:
1. At a uniform rate conforming to MnDOT Spec. 2357.3.D, but not greater than 0.07 gallon per square yard, new asphalt.
2. Along the front edge of the concrete curb and gutter, prior to placement of bituminous initial lift.

3.06 MIXTURE QUALITY CONTROL

A. Mixture Quality Management (Quality Control/Quality Assurance): Conform to MnDOT Spec. 2360.2.G., except as modified herein:
1. Quality Assurance testing will be completed at the discretion of the Engineer, testing rates will not exceed Table 2360.2-7 and 2360.2-8.

B. Bituminous plant inspections are required on all publicly bid projects and will be scheduled by Engineer.


© 2026 City of Cottage Grove, Minnesota

## 3.07 PAVEMENT DENSITY

A. General:
   1. This contract will utilize Nuclear Density Gauge testing for density determination for all pavement except as noted. Density testing shall be completed as described in this section and in accordance with MnDOT 2360.3.D.1 except as modified herein:
      a. Delete the first paragraph of MnDOT 2360.3.D.1 and replaced with the following:
         1) Compact the pavement to at least the minimum required maximum density values in accordance with Table 2360.3-1.
      b. Delete the first sentence of MnDOT 2360.3.D.1.e and replace with the following:
         1) Complete compaction within 8 hours of mixture placement and before completing density testing. All density testing must be done as soon as practical after the compaction process and before opening to traffic.
      c. Modify Table 2360.3-3 as indicated below:

| Daily Production (Tons) | Lots |
|---|---|
| 0 to 1,000 | 1 |
| 1,001 to 2,000 | 2 |
| 2,001 to 3,600 | 3 |
| 3,601 to 5,000 | 4 |
| 5,001 + | 6 |

      d. Delete the following sections:
         1) 2360.3.D.1.h.
         2) 2360.3.D.1.i.
         3) 2360.3.D.1.j.
         4) 2360.3.D.1.k.
         5) 2360.3.D.1.l.
      e. Delete the third sentence in the 1st paragraph of MnDOT Section 2360.3.D.1.m and replace with the following:
         1) The Contractor must notify the Engineer, in writing, by the third day of Paving or 1 day prior to the last day of paving of the first lift (whichever is sooner) of their intent to wave Maximum Density.
      f. Pathways, Driveways, Patching shall conform to MnDOT Spec. 2360.3.D.2.

B. Longitudinal Joint Density, delete the following:
   1. 2360.3.D.1.n.
   2. 2360.3.D.1.o.
   3. 2360.3.D.1.p.

C. Nuclear Gauge Correlation:
   1. The QC (Contractor), Verification (Owner), and back-up gauges used on the project must complete the correlation process a minimum of one week prior to paving operations.
   2. Engineer shall select a section of existing pavement to be used as the test site for the correlation process. The section does not have to be the same mix design.
   3. Correlate all gauges to be used for density measurement on the project (minimum of two QC & two Verification).


© 2026 City of Cottage Grove, Minnesota

a. QC and Verification gauges will be correlated with Correlation Core results to determine a correction factor for each gauge. Correlation Cores will be obtained and tested by the Owner.

4. All results for the Correlation Process must be recorded on the **Nuclear Gauge Correlation** form. The Owner will complete the form once core testing is complete, then will send it to the Contractor. The form should be completed and submitted to the Engineer prior to the first day of paving.
5. Nuclear Gauge Correlation process may be waved at the Owners discretion on projects that do not include state or federal funding.

D. Reference Site Monitoring:
   1. After performing the gauge correlation process, the Engineer shall establish a project reference site. Reference site shall consist of a flat surface of concrete, asphalt or other material that will not be disturbed during the duration of the project and must be clearly marked. Perform reference site monitoring of all QC and QV gauges used on the project at the reference site.
   2. See Reference Site Summary – Instructions for the process.
      a. Complete **Reference Site Summary** form and **Reference Site Daily Record** form as required.
   3. An established Reference Site may be used for multiple projects.

E. Target Maximum Density:
   1. The target value is established using the mixture maximum specific gravity (Gmm). For the first day of paving with a mix design the target maximum density will be the Gmm value indicated on the mix design times 62.24 to get lb/ft$^3$. The target maximum density for all other days will be the running average of four Gmm tests at the end of the previous day times 62.24 for your new lb/ft$^3$. If four tests have not been completed the first day, the average of the first day's Gmm tests must be used for the second day target lb/ft$^3$. This process will continue until a running average of four is established.

F. Use of Nuclear Gauges on Bituminous Pavement:
   1. Conform to ASTM D2950 Standard Test Method for Density of Bituminous Concrete in Place by Nuclear Methods.
      a. During testing, the gauge must be placed on a flat level surface on the material being tested. The longest dimension of the gauge must be parallel to the longitudinal edge of the pavement for the first reading and rotating the gauge 90 degrees clockwise for each subsequent reading.
      b. Perform nuclear gauge measurements using gamma radiation in the backscatter position.
      c. Each test shall be for a duration of 4 minutes of nuclear gauge count time.

G. Contractor Quality Control Testing:
   1. General:
      a. Paving lots will be established, tested, and evaluated separately for each paving layer and mix type.
      b. All test locations will be determined by the Engineer at random locations. The Engineer will provide test locations following compaction of the pavement. Three individual readings will be required at each test location with the first reading taken placing the gauge long-ways be parallel to the longitudinal edge of the pavement facing the direction


© 2026 City of Cottage Grove, Minnesota

of the paving operation. Each subsequent reading will be obtained after rotating the gauge 90 degrees clockwise. The average of the three tests for each location will be recorded and submitted to the Engineer at the end of each paving day.

c. If the Engineer requests, additional testing may be required at no additional cost to the owner. Additional test results may be incorporated into the calculations for average lot density.

d. Density testing will be required at the discretion of the Engineer when the production of a specific mix type is between 0 to 300 tons.

2. Street Paving Density:
   a. Density tests will be performed on equal size lots based on the design street section. Each lot will consist of 5 test locations.
3. Irregular Paving Density:
   a. Density tests will be performed on lots of bituminous mixture placed consisting of a minimum of one density test performed per each occurrence of irregular pavement at the Engineers discretion. Each lot will contain a maximum of 5 tests.

H. Owner Verification:
   1. General:
      a. A minimum of one Verification Test location is required for each lot of bituminous mixture placed.
      b. Verification test locations must be located at the same location as QC tests.

I. Tolerance Comparison and Dispute Resolution:
   1. Tolerance Comparison
      a. Compare Verification test with corresponding control test taken at the same location. If the QC and QV tests differ by more than 1.5lb/ft$^3$ Owner will check two additional locations within the same lot and compare the average of three QV tests with the average of three corresponding QC tests.
         - If the average of 3 QV tests is greater than or within 1.5lb/ft$^3$ the average of 3 corresponding QC tests, the average of 5 QC tests will be used and no further action will be required.
         - If the average of 3 QV tests is less than 1.5 of the average of 3 corresponding QC tests, the average of 3 QV tests will be used.
   2. The testers may check gauges with the reference site monitoring (Reference Site Summary form) to determine if one of the gauges is out of tolerance.

J. Contractor required documentation shall include completing the documents listed below and provided at the end of this technical specification section:
   1. **Nuclear Gauge Correlation**
   2. **Reference Site Summary**
   3. **Reference Site Daily Record**

Providing the completed documents above is considered incidental to the placement of the specified bituminous mix.


© 2026 City of Cottage Grove, Minnesota

3.08 THICKNESS AND SURFACE SMOOTHNESS REQUIREMENTS

A. Conform to MnDOT Section 2360.3.E except as modified herein:
   1. Cores will not be taken for determination of thickness. Engineer will observe Contractor performing periodic thickness checks by probing pavement behind the paver prior to compaction and verify measurements obtained. Engineer will assume compaction of pavement will result in a reduction of ¼ inch per 1 inch of depth of the uncompacted mix behind the paver. Engineer may request probing to occur at their discretion.

B. Structure Adjustment – Conform to Section 33 05 18 for tolerances.

3.09 TEMPORARY BITUMINOUS WEDGE

A. Where concrete curb and gutter is installed, construct a temporary bituminous wedge meeting the following requirements:
   1. 8 or 10 feet wide from front edge of concrete curb and gutter.
   2. Thickness to be a minimum of 3/8 inch over curb and taper to meet the prior lift elevation.

3.10 PATCH BITUMINOUS STREET, DRIVEWAY, OR TRAIL

A. Perform patching at locations shown on the Drawings or as directed by Engineer.

B. Remove existing bituminous per Section 02 41 13.

C. Saw cut existing bituminous per Section 02 41 13.

D. Excavate to the bottom of the aggregate base or aggregate backfill layer as shown on the Drawings and dispose of material per Section 31 23 00.

E. Place aggregate backfill, as required, per Section 31 23 00.

F. Place aggregate base per Section 32 11 23.

G. Place bituminous pavement.

H. Driveway patching requires bituminous placement in two separate equal lifts.

**END OF SECTION**


© 2026 City of Cottage Grove, Minnesota

This Page Left Blank Intentionally

# Nuclear Gauge Correlation

(Instructions on back)

| | | | | | |
|---|---|---|---|---|---|
| Project | | Contractor | | Date | |
| Project No. | | Plant | | Verification Company | |
| Owner | | QC Tester | | Verification Tester | |

**Core Density Results**

OWNER

| Correlation Test # | 1 | 2 | 3 | | |
|---|---|---|---|---|---|
| A. Weight in Air | | | | | |
| B. S.S.D Weight | | | | | |
| C. Weight in Water | | | | | |
| D. Volume (B-C) | | | | | |
| E. Core Density ((B/D)x62.24) | | | | | |

| **Nuclear Density Readings** | | Gauge Serial No. | | Standard Count | |
|---|---|---|---|---|---|
| F. Density 1 | | | | | |
| G. Density 2 | | | | | |
| H. Ave. Nuclear Density | | | | | |
| I. Individual Correction Factor (E-H),Show+/- | | | | | |
| Correction Factor to be applied to Nuclear Density Readings | | | | | |

| **Nuclear Density Readings** | | Gauge Serial No. | | Standard Count | |
|---|---|---|---|---|---|
| F. Density1 | | | | | |
| G. Density2 | | | | | |
| H. Ave. Nuclear Density | | | | | |
| I. Individual Correction Factor (E-H),Show+/- | | | | | |
| Correction Factor to be applied to Nuclear Density Readings | | | | | |

CONTRACTOR

| **Nuclear Density Readings** | | Gauge Serial No. | | Standard Count | |
|---|---|---|---|---|---|
| F. Density1 | | | | | |
| G. Density2 | | | | | |
| H. Ave. Nuclear Density | | | | | |
| I. Individual Correction Factor (E-H),Show+/- | | | | | |
| Correction Factor to be applied to Nuclear Density Readings | | | | | |

| **Nuclear Density Readings** | | Gauge Serial No. | | Standard Count | |
|---|---|---|---|---|---|
| F. Density1 | | | | | |
| G. Density2 | | | | | |
| H. Ave. Nuclear Density | | | | | |
| I. Individual Correction Factor (E-H),Show+/- | | | | | |
| Correction Factor to be applied to Nuclear Density Readings | | | | | |

# Nuclear Gauge Correlation

Instructions:

1. Engineer to locate and identify a minimum of three correlation test locations. (*Engineer*)
2. Complete daily standard count prior to starting test. (*Contractor, Owner*)
3. For each gauge to be used on project (minimum of two QC and two Verification) perform two density tests at each correlation test location. Each test shall be for a duration of 4 minutes. The second test shall be taken with the gauge rotated 90 degrees from the first test. Record results in chart (F & G). (*Contractor, Owner*)
4. Calculate the Average Nuclear Density (H) for each test location. (Contractor, Owner)
5. Obtain a Correlation Core at each correlation test location. (*Owner*)
6. Determine the core bulk specific gravity for each Correlation Core per MnDOT Laboratory Test Method 1810 (A-E). (*Owner)*
7. Calculate the Individual Correction Factor (I) for each correlation test location. (*Engineer*)
8. Calculate the Correction Factor (Average of I for all locations) to be applied to each nuclear gauge. (Engineer)

Sketch location of tests below

# Reference Site Summary

(Instructions on back)

| | | | | | |
|---|---|---|---|---|---|
| Project | | Contractor | | Date | |
| Project No. | | Plant | | Verification Company | |
| Owner | | QC Tester | | Verification Tester | |

**Bulk Density Readings**

| | | |
|---|---|---|
| Gauge Serial No. | | |
| QC/Verification | | |
| Density 1A | | |
| Density 1B | | |
| Density 2A | | |
| Density 2B | | |
| Density 3A | | |
| Density 3B | | |
| Density 4A | | |
| Density 4B | | |
| Density 5A | | |
| Density 5B | | |
| Gauge Reference Value (Average) | | |

**Daily Check**

| Date | Gauge Serial No. | Gauge Serial No. |
|---|---|---|
| | | |
| | | |
| | | |
| | | |
| | | |
| | | |
| | | |
| | | |
| | | |
| | | |
| | | |
| | | |
| | | |
| | | |
| | | |
| | | |
| | | |
| | | |
| | | |
| | | |
| | | |
| | | |

# Reference Site Summary Instructions

Instructions:

1. Engineer to locate and identify a Reference Site. (*Engineer*)
2. Complete daily standard count prior to starting test. (*Contractor, Owner*)
3. For each gauge to be used on project (minimum of two QC and two Verification) perform five density tests at Reference Site. Each test shall be for a duration of 4 minutes and consist of two gauge readings. The second test shall be taken with the gauge rotated 90 degrees clockwise from the first test.*(Contractor, Owner)*
4. Calculate the average for each gauge to establish a reference value. Use the established reference value as a control to monitor the calibration of the gauge during the duration of the project. *(Contractor, Owner)*
5. A minimum of once per day, on every day of paving operations, perform one test at the Reference Site. Record test result on **Reference Site Daily Record**. *(Contractor, Owner)*
6. Compare daily test results for each gauge to the gauges Reference Value. If the daily result is within 1lb/cf of the Reference Value for that gauge proceed with project testing. If the daily result is not within 1lb/cf, investigate the cause of the difference. Conduct 5 additional tests at the reference site once the cause of deviation is corrected. Calculate and record the average of the 5 additional tests on the **Reference Site Daily Record**. If the average of five tests is within 1 lb/cf proceed with project testing. If the average of five tests is not within 1lb/cf remove the gauge from the project and use different gauge. *(Contractor, Owner)*

Sketch location of tests below

# Reference Site Daily Record

| | | | |
|---|---|---|---|
| Project | | QC/V Company | |
| Project No. | | QC/ V Tester | |
| Owner | | Gauge Serial # | |
| | | **Reference Site Value for Gauge No.** | |

| Date | Check 1 | Check 2 (if required) | Check 3 (if required) | Check 4 (if required) | Check 5 (if required) | Average (if required) |
|---|---|---|---|---|---|---|
| | | | | | | |
| | | | | | | |
| | | | | | | |

This Page Left Blank Intentionally

# Nuclear Density Lot Testing Record

| | | | | | |
|---|---|---|---|---|---|
| Project | | Owner | | Bid Item No. | |
| Project No. | | Lot No. | | Mix Design No. | |
| Contractor | | Dates Paved | | Required Density % | |
| QC Tester/Company | | Streets | | Total Tons | |
| QV Tester/Company | | | | Design Thickness | |
| | | | | | |

toring Required (check min. once per day)

| | Contractor QC Tests | | | | | | | | | | Owner QV Tests (Min 1 Per Lot) | | | | | | | |
|---|---|---|---|---|---|---|---|---|---|---|---|---|---|---|---|---|---|---|
| Test No. | 1 | -1 | 1 | -2 | 1 | -3 | 1 | -4 | 1 | -5 | Ave | 1 | -5V | Individual Difference | 1 | | 1 | | Ave of 3 (If Req.) | Ave of 3 Difference |
| Street, Lane | | | | | | | | | | | | | | | | | | | | |
| Station Offset from L | | | | | | | | | | | | | | | | | | | | |
| Gauge Reading 1 | | | | | | | | | | | | | | | | | | | | |
| Gauge Reading 2 | | | | | | | | | | | | | | | | | | | | |
| Gauge Reading 3 | | | | | | | | | | | | | | | | | | | | |
| Gauge Reading Ave | | | | | | | | | | | | | | | | | | | | |
| Max Theoretical Specifc Gravity gmm | | | | | | | | | | | | | | | | | | | | |
| Target Max Density gmm x 62.24 | | | | | | | | | | | | | | | | | | | | |
| % of Max. Density | | | | | | | | | | | | | | | | | | | | |
| Date | | | | | | | | | | | | | | | | | | | | |
| Time | | | | | | | | | | | | | | | | | | | | |

**Test Remarks**

If QV individual test difference from the corresponding QC test is 1.5lb/cf or less, no additional tests are required and the average of 5 QC tests will be used
If QV individual test difference from the corresponding QC test is greater than 1.5lb/cf, perform 2 additional QV tests

If the average of 3 QV tests is greater than or within 1.5 lb/cf the average of 3 corresponding QC tests, the average of 5 QC tests will be used
If the average of 3 QV tests is less than 1.5lb/cf of the average of 3 corresponding QC tests, the average of 3 QV tests will be used

# Nuclear Density Lot Testing Summary

| | | | | | |
|---|---|---|---|---|---|
| Project | | Contractor | | Mix | |
| Project No. | | Plant | | Course | |
| Owner | | QC Tester | | Required Density % | 93.0% |
| QV Tester | | Incentive Available | Yes | Disincentive Available | Yes |
| | | | | Total TN for lift | |

| Test | Lot No. | Date Paved | Location | Lot Ave. Density | Pay Factor | TN Represented | Incentive/Disincentive |
|---|---|---|---|---|---|---|---|
| QV<br>QC | 1 | | | | | | |
| QV<br>QC | 2 | | | | | | |
| QV<br>QC | 3 | | | | | | |
| QV<br>QC | 4 | | | | | | |
| QV<br>QC | 5 | | | | | | |
| QV<br>QC | 6 | | | | | | |
| QV<br>QC | 7 | | | | | | |
| QV<br>QC | 8 | | | | | | |
| QV<br>QC | 9 | | | | | | |
| QV<br>QC | 10 | | | | | | |
| | | | | | Total | | |

# SECTION 32 13 14

# CONCRETE WALKS, MEDIANS, AND DRIVEWAYS

## PART 1 GENERAL

1.01 SUMMARY

A. Section Includes:
   1. Cast-in-place concrete walkways, medians, driveways, and valley gutters.

B. Related Sections:
   1. Section 02 41 13 - Selective Site Demolition.
   2. Section 31 23 00 - Excavation and Fill.
   3. Section 31 23 13 - Subgrade Preparation.
   4. Section 32 11 23 - Aggregate Base Courses.
   5. Section 32 16 13 - Concrete Curbs and Gutters.

1.02 PRICE AND PAYMENT PROCEDURES

A. Measurement and Payment:
   1. 6 Inch Concrete Sidewalk: Measurement per square yard:
      a. Payment of the Bid Item shall include the following:
         1) Concrete materials.
         2) Subgrade and base preparation.
         3) Placement and finishing of materials.
         4) Labor and equipment.
         5) Curing and protection.
         6) Backfilling.
      b. Excavation for concrete sidewalk shall be measured and compensated per Section 31 23 00.
      c. Aggregate base beneath concrete sidewalk shall be measured and compensated per Section 32 11 23.
   2. Remove and Replace 6 Inch Concrete Sidewalk: This Bid Item shall be used for all concrete sidewalk removed and replaced on this Project without regard to thickness and is assumed to be all hand placed. Measurement per square yard based on in-place area of sidewalk removed and replaced:
      a. Payment of the Bid Item shall include the following:
         1) Sawcutting at the removal limits.
         2) Removal and disposal of existing concrete and excess aggregate materials.
         3) Excavation and subgrade preparation.
         4) Aggregate base and concrete materials.
         5) Placement and finishing of materials.
         6) Labor and equipment.
         7) Curing and protection.
         8) Backfilling.


© 2026 City of Cottage Grove, Minnesota

3. 6 Inch Concrete Pedestrian Curb Ramp: Measurement per square foot: Measurement of ramp shall not include adjacent concrete curb and gutter, which shall be measured and compensated separately.
    a. Payment shall include the following:
        1) Concrete materials, including material under truncated dome.
        2) Subgrade and aggregate base preparation.
        3) Placement and finishing of materials.
        4) Labor and equipment.
        5) Curing and protection.
        6) Backfilling.
    b. Excavation for concrete pedestrian ramp shall be measured and compensated per Section 31 23 00.
    c. Aggregate base beneath concrete pedestrian ramp shall be measured and compensated per Section 32 11 23.
4. Remove and Replace 6 Inch Concrete Pedestrian Curb Ramp: Measurement of ramp per square foot based on in-place area of concrete remove and placed.
    a. Measurement of ramp shall not include adjacent concrete curb and gutter, which shall be measured and compensated separately.
    b. Payment shall include the following:
        1) Sawcutting at the removal limits.
        2) Removal and disposal of existing concrete, bituminous, and excess aggregate materials.
        3) Excavation and subgrade preparation.
        4) Aggregate base materials, placement, and preparation.
        5) Concrete materials, including material under truncated dome.
        6) Placement and finishing of materials.
        7) Labor and equipment.
        8) Curing and protection.
        9) Backfilling.
5. Truncated Dome Panel, which is part of the concrete pedestrian curb ramp: Measurement per square foot:
    a. Payment shall include the following:
        1) Truncated panel materials.
        2) Placement of truncated panels.
        3) Joint sealing material.
        4) Protection of truncated panels during construction.
    b. Radial truncated domes will be measured along the long cord and multiplied by 2 feet to compute square feet.
6. 6 Inch Concrete Driveway (Residential) and 7 Inch Concrete Driveway (Commercial): Measurement per square yard:
    a. Payment of the Bid Item shall include the following:
        1) Concrete materials.
        2) Subgrade and Aggregate base preparation.
        3) Placement and finishing of materials.
        4) Labor and equipment.
        5) Curing and protection.
        6) Backfilling.


© 2026 City of Cottage Grove, Minnesota

b. Excavation for concrete driveway shall be measured and compensated per Section 31 23 00.
c. Aggregate base beneath concrete driveway shall be measured and compensated per Section 32 11 23.

7. Remove and Replace 6 Inch Concrete Driveway (Residential) and 7 Inch Concrete Driveway (Commercial): Measurement per square yard of Concrete Driveway Apron based on in-place area of driveway removed and replaced:
   a. Payment of the Bid Item shall include the following:
      1) Sawcutting at the removal limits.
      2) Removal and disposal of existing concrete pavement and excess aggregate materials.
      3) Excavation and subgrade preparation.
      4) Aggregate base and concrete materials.
      5) Placement and finishing of materials.
      6) Patching of adjacent street.
      7) Labor and equipment.
      8) Curing and protection.
      9) Backfilling.
8. 4 Inch Concrete Median: Measurement per square yard:
   a. Payment of the Bid Item shall include the following:
      1) Concrete materials.
      2) Subgrade and aggregate base preparation.
      3) Placement and finishing of materials.
      4) Labor and equipment.
      5) Curing and protection.
      6) Backfilling.
   b. Excavation for concrete median shall be measured and compensated per Section 31 23 00.
   c. Aggregate base beneath concrete median shall be measured and compensated per Section 32 11 23.
9. Remove and Replace 4 Inch Concrete Median: Measurement per square yard based on in-place area of median removed and replaced:
   a. Payment of the Bid Item shall include the following:
      1) Sawcutting at the removal limits.
      2) Removal and disposal of existing concrete and excess aggregate materials.
      3) Excavation and subgrade preparation.
      4) Aggregate base and concrete materials
      5) Placement and finishing of materials.
      6) Labor and equipment.
      7) Curing and protection.
      8) Backfilling.
10. Concrete Median Approach Nose: Measurement per square yard:
    a. Payment of the Bid Item shall include the following:
       1) Concrete materials.
       2) Subgrade and aggregate base preparation.
       3) Placement and finishing of materials.
       4) Labor and equipment.
       5) Curing and protection.
       6) Backfilling.


© 2026 City of Cottage Grove, Minnesota

b. Excavation for concrete median approach nose shall be measured and compensated per Section 31 23 00.
c. Aggregate base beneath concrete median approach nose shall be measured and compensated per Section 32 11 23.

11. Remove and Replace Concrete Median Approach Nose: Measurement per square yard based on in-place area of median approach nose removed and replaced:
    a. Payment of the Bid Item shall include the following:
        1) Sawcutting at the removal limits.
        2) Removal and disposal of existing concrete and excess aggregate materials.
        3) Excavation and subgrade preparation.
        4) Aggregate base and concrete materials.
        5) Patching of adjacent street.
        6) Placement and finishing of materials.
        7) Labor and equipment.
        8) Curing and protection.
        9) Backfilling.
12. Concrete Valley Gutter: Measurement per square yard:
    a. Payment of the Bid Item shall include the following:
        1) Concrete materials.
        2) Subgrade and aggregate base preparation.
        3) Placement and finishing of materials.
        4) Reinforcement.
        5) Labor and equipment.
        6) Curing and protection.
        7) Backfilling.
    b. Excavation for concrete valley gutter shall be measured and compensated per Section 31 23 00.
    c. Aggregate base beneath concrete valley gutter shall be measured and compensated per Section 32 11 23.
13. Remove and Replace Concrete Valley Gutter: Measurement per square yard based on newly constructed area of concrete:
    a. Payment of the Bid Item shall include the following:
        1) Sawcutting of existing pavement.
        2) Removal and disposal of existing concrete, bituminous, and excess aggregate materials.
        3) Excavation and subgrade preparation.
        4) Aggregate base and concrete materials.
        5) Reinforcement.
        6) Placement and finishing of materials.
        7) Patching of adjacent street.
        8) Labor and equipment.
        9) Curing and protection.
        10) Backfilling.
14. High Capacity Concrete Apron: Measurement per each:
    a. Payment of the Bid Item shall include the following:
        1) Concrete materials.
        2) Subgrade and aggregate base preparation.
        3) Placement and finishing of materials.


© 2026 City of Cottage Grove, Minnesota

4) Reinforcement.
5) Labor and equipment.
6) Curing and protection.
7) Backfilling.

b. Excavation for high capacity concrete apron shall be measured and compensated per Section 31 23 00.
c. Aggregate base beneath high capacity concrete apron shall be measured and compensated per Section 32 11 23.

15. Concrete Spillway: Measurement per square foot of spillway constructed.
    a. Payment of the Bid Item shall include the following:
        1) Excavation and subgrade preparation.
        2) Removal and disposal of all excess materials.
        3) Aggregate base and concrete materials.
        4) Placement and finishing of materials.
        5) Labor and equipment.
        6) Curing and protection.
        7) Backfilling.
16. Concrete Truck Apron: Measurement per square yard by depth of concrete:
    a. Payment of the Bid Item shall include the following:
        1) Concrete materials.
        2) Subgrade and aggregate base preparation.
        3) Placement and finishing of materials.
        4) Reinforcement including tie bars and dowel bars.
        5) Curing and Projection.
        6) Backfilling.
    b. Excavation for concrete truck apron shall be measured and compensated per Section 32 11 23.
    c. Aggregate base beneath concrete pavement shall be measured and compensated per Section 32 11 23.
17. 6 Inch Concrete Hydrant Access Pad or Mailbox Pad: Measurement per square foot:
    a. Payment of the Bid Item shall include the following:
        1) Excavation and subgrade preparation.
        2) Removal and disposal of all excess materials.
        3) Aggregate base and concrete materials.
        4) Placement and finishing of materials.
        5) Labor and equipment.
        6) Curing and protection.
        7) Backfilling.
18. Maturity Testing for Compressive Strength: Measurement by Lump Sum for testing all concrete curb, driveways, and valley gutters. Payment shall include, but is not limited to, maturity curve establishment and all testing and necessary equipment to complete the maturity determination for each type of concrete mix used for curbs and driveways on the project.
19. All other Work and costs of this Section shall be incidental to the Project and included in the Total Base Bid.


© 2026 City of Cottage Grove, Minnesota

1.03 REFERENCES

A. American Society of Testing Materials (ASTM):
C260 - Air-Entraining Admixtures for Concrete.

B. Minnesota Department of Transportation “Standard Specifications for Construction”, 2025 Edition (MnDOT Spec.):
1. 2211 - Aggregate Base.
2. 2461 - Structural Concrete.
3. 2521 - Walks.
4. 3101 - Portland Cement.
5. 3113 - Admixtures for Concrete.
6. 3702 - Preformed Joint Fillers.
7. 3754 - Poly-Alpha Methyl Styrene (AMS) Membrane Curing Compound.

1.04 SUBMITTALS

A. Submit MnDOT approved design mix for each concrete mix designation used.

B. The Contractor is responsible for developing the maturity curve for each specified mix and delivering a copy of the results to Engineer no later than two weeks prior to placement.

C. The Contractor is responsible for taking maturity readings and delivering a copy of the results to the Engineer by the end of the each work day on a daily basis, until the concrete meets the specified strength. The Contractor shall provide the testing data from the in-place maturity measuring devices through a cell phone App or electronically.

1.05 SEQUENCING AND SCHEDULING

A. Provide notice by 2:00 P.M. of the day prior to any concrete curb and gutter placement, to allow time for scheduling of the following activities. Notice must include mix designation, start time of placement, plant producing concrete, and Foreman onsite during placement:
1. Aggregate base DCP tests (per Section 32 11 23) prior to any concrete curb being placed.
2. Inspection of curbing operations by a City representative. No curbing will be allowed or accepted without inspection.
3. Concrete field and plant testing if required.

B. Complete construction of concrete pedestrian ramps prior to the paving of bituminous path and construction of the concrete sidewalk.

C. Complete construction of concrete sidewalks following the paving of the bituminous initial lift wearing course and following the installation of Private Utilities.

D. Begin construction of the concrete driveway aprons, concrete hydrant access pads, mailbox pads, and concrete medians no sooner than 24 hours after placement of the adjacent concrete curb and gutter.

E. Construct concrete valley gutter prior to the paving of bituminous initial lift.


© 2026 City of Cottage Grove, Minnesota

1. Concrete valley gutters must be protected during the paving of bituminous street. Method of protection must be approved by the engineer.
2. On street rehabilitation projects, valley gutters shall be constructed in halves to provide access for residents.

F. All concrete placed between October 1 and October 15 must be high early strength concrete.

G. Under no circumstances will concrete be allowed to be placed after October 15, without prior approval from the Engineer.

## PART 2 PRODUCTS

2.01 MATERIALS

A. Concrete to conform to MnDOT Spec. 2461, except as modified herein:
1. Portland Cement: Conform to MnDOT Spec. 3101:
   a. Type 3 air-entraining concrete produced by using Type I Portland Cement.
2. Air-Entraining Admixtures: conform to MnDOT Spec. 3113:
   a. Conforming to ASTM C260.
   b. Not to be added to the concrete mixtures in the field without approval from Engineer.
3. Mix Designation and Classification:
   a. Sidewalk, Pedestrian Ramps, Hydrant Pads and Medians: Mix No. 3F52A.
   b. Valley gutters: Mix No. 3HE52A.
   c. Residential and Commercial Driveways: Mix No. 3HE52A.

B. Truncated Dome Panels: Approved products:
1. East Jordan Iron Works – Cast Iron Uncoated.
2. Neenah Foundry Company – Cast Iron Uncoated.
3. Natural color – unpainted.

C. Preformed Joint Filler: Conform to MnDOT Spec. 3702.

D. Curing Compound: Conform to MnDOT Spec. 3754:
1. Curing compound shall contain a fugitive dye.
2. Spot Removal and replacement projects: Curing compound shall conform to ASTM C309, Type 1-D, clear with fugitive dye, Class B applied at a rate of 200 square feet per gallon.

E. Sub-Grade Base Material:
1. Aggregate Backfill: Conform to Section 31 23 00.
2. Aggregate Base: Conforming to Section 32 11 23.

## PART 3 EXECUTION

3.01 GENERAL

A. Concrete contractor shall have at least two people with a current ACI concrete flatwork technician or flatwork finisher certification, and at least one of them must be onsite for all concrete pours.

B. Provide copies of batch tickets for concrete mix at the time of material delivery to Site.


© 2026 City of Cottage Grove, Minnesota

C. Construct concrete sidewalk, pedestrian ramps, driveways, medians, median approach noses, and valley gutters at the locations and elevations indicated on the Drawings.

D. Construct sidewalks and medians to conform to the typical section shown on the Drawings.

E. Construct concrete driveway aprons to conform to Standard Detail Plates STR-17 and STR-18.

F. Construct concrete median approach nose per Standard Detail Plate STR-38.

G. Construct concrete valley gutters to conform to Standard Detail Plate STR-16 and prior to the paving of bituminous street.

H. Construct High Capacity Concrete Apron to conform to Standard Detail Plate STR-15.

I. Construct concrete hydrant pads to conform to Standard Detail Plate STR-37.

J. Construct concrete curb ramp to conform to MnDOT Standard Details, current version, except as modified herein:
   1. Three foot wide concrete wings shall be constructed on both sides of all sidewalk and trail pedestrian ramps except when a trail intersects perpendicular to the curb on both edges of the trail.

K. Verify locations with Engineer in the field prior to construction.

L. The completed concrete work shall give the appearance of uniformity in surface contour and texture, and shall be accurately constructed to line and grade. The required joints, edges, and flow lines shall show neat workmanship. The concrete work shall be in full accordance with the Standard Detail Drawings. Any deviations from the Standard Detail Plates may be cause for removal and replacement at the Contractor's expense. No price reductions will be allowed as a means to correct deviations.

M. Re-tempering of concrete which has partially hardened with or without additional materials or water is prohibited.

N. Remove and Replace Concrete Sidewalks, Concrete Pedestrian Ramps, Concrete Driveways, Concrete Medians, Concrete Median Approach Noses:
   1. Perform patching at locations shown on the Drawings or as directed by the Engineer per Standard Detail Plate STR-42.
   2. Remove existing concrete per Section 02 41 13.
   3. Saw cut existing concrete per Section 02 41 13.
   4. Excavate to the bottom of the aggregate base layer and dispose of the material per Section 31 23 00.
   5. Place aggregate base per Section 32 11 23.
   6. Place concrete pavement.

O. Construct Concrete Spillway:
   1. Construct a concrete spillway at locations shown on the Drawings or as directed by the Engineer.
   2. 6 inches thick (minimum).


© 2026 City of Cottage Grove, Minnesota

3. 5 feet wide (minimum).
4. Construct spillway such that the storm water is conveyed directly to the bottom of the drainage way, thereby minimizing erosion in the general area.

P. Concrete washout locations shall conform to the requirements of the NPDES Permit.

3.02 FOUNDATION PREPARATIONS

A. Placement of the aggregate base or granular material to support the concrete work shall conform to Section 32 11 23 or Section 31 23 13. Compaction of subgrade base shall conform to MnDOT Spec. 2211.3.D.2.c.

B. The foundation shall be approved by the Engineer prior to placement of concrete material.

3.03 FORMS

A. Conform to MnDOT Spec. 2521.3.C.

3.04 JOINT CONSTRUCTION

A. Conform to MnDOT Spec. 2521.3.D.2, except as modified herein:
   1. Match joints of adjacent concrete work.
   2. Transverse expansion joints for sidewalk:
      a. 200 foot intervals.
      b. Concrete areas that are poured separately.
   3. Contraction joints shall be tooled. Sawed joints not allowed.

3.05 METAL REINFORCEMENT

A. Conform to MnDOT Spec. 2472, except as modified herein:
   1. Install 3 No. 4 steel reinforcing rods in lower portion of the valley gutter section with minimum 2 inch coverage on all sides.

3.06 PLACING AND FINISHING

A. Conform to MnDOT Spec. 2521.3.C and 2521.3.D for manual placement or 2521.3.D for slip form, except as modified herein:
   1. Any deviation in the design curvature of concrete edges in excess of 3/8 of an inch, measured with a 10 foot straight edge, will be considered unacceptable.
   2. Any surface area allowing the entrapment of water at a depth 1/8 inch or greater will be considered unacceptable.
   3. Unacceptable work shall be removed and replaced with acceptable Work as directed by the Engineer. Acceptance of Work by price reduction will not be allowed.

B. Pedestrian Curb Ramp - Truncated Dome:
   1. Truncated Dome Panels - Conform to the manufacturer’s recommendations for placement.
   2. Truncated dome panels shall be placed (wet set) on a minimum of 6 inches concrete and prior to finishing the adjacent concrete surface of the pedestrian ramp. The joint between the panel and concrete shall be finished with 1/2 inch radius edging tool.


© 2026 City of Cottage Grove, Minnesota

3. Conform to MnDOT Standard Detail Plate No. 7038A for specified truncated dome surface pattern dimensions. Refer to the Drawings for actual ramp size, shape, and slopes.
4. Multiple Truncated Dome panels shall be rectangular or radial plates of equal size and shall be joined together per the manufacturer's recommendation.
5. Joint space between truncated dome panels shall be no greater than 1/4 inch in width.
6. Radius style Truncated Dome Panels required when exceeding 5-foot dimension from back of curb.

## 3.07 CONCRETE CURING AND PROTECTION

A. Conform to MnDOT Spec. 2521.3.E and 2521.3.E.1.a, except as modified herein:
   1. Coat all surfaces with membrane curing compound within 30 minutes after finishing at the specified rate.
   2. The membrane-curing compound must be applied at 2 different directions perpendicular to each other. Curing compound containing fugitive die must provide a uniform solid white opaque coverage (equal to a white sheet of typing paper) on all exposed concrete surfaces.
   3. A second application of membrane curing compound shall be applied 4 to 8 hours after the first application at the specified rate.
   4. Protect concrete against hot weather conditions as defined in the PCA Design and Control of Concrete Mixtures as when the rate of evaporation of bleed water per hour exceeds 0.2 lb. of water per square foot per hour. A chart published by the ACI and PCA can be used to predict the bleed water rate.
   5. Cold weather curing, when temperatures fall below 40 degrees F during placement or within the following 24 hours, shall conform to MnDOT Spec. 2521.3.E.3.a and 2521.3.E.1.b blanket curing method, except as modified below:
      a. If temperatures are projected to fall below 32 degrees within 24 hours of concrete placement, insulated blankets shall be using for curing.
      b. All costs associated with blanket curing shall be incurred by the Contractor.
   6. Failure to comply with these provisions will result in a price reduction for the concrete Bid Item involved in accordance with MnDOT Spec. 1503.
   7. The freshly finished surface shall be protected, surfaces pitted by rain will be considered unacceptable.
   8. Removal and replacement of any concrete section damaged by traffic, rain, cold weather, or other causes occurring prior to final acceptance shall be the responsibility of the Contractor.

## 3.08 HIGH EARLY CONCRETE

A. Conform to MnDOT Spec. 2461.2.E.2.b(2), except as modified herein:
   1. High early concrete shall be designed to provide a maximum water/cementitious ratio of 0.42.
   2. High early concrete shall be designed to provide a minimum flexural strength of 500 psi and a minimum compressive strength of 3,000 psi in 48 hours.

## 3.09 CONCRETE STRENGTH BY MATURITY TESTING

A. When utilized on a project, the intent of the maturity testing is so the Contractor can proceed with work once concrete has achieved maturity.

B. Determining concrete maturity (time temperature factor, TTF) and estimating in-place concrete strength is a two-step procedure as follows:


© 2026 City of Cottage Grove, Minnesota

1. Maturity Curve:
    a. Create maturity curve in accordance with MnDOT section 2461.G.6.a(1)
    b. Complete No later than 2 weeks prior to construction.
2. Equipment:
    a. Conform to MnDOT 2461.g.6.a(2).
3. Estimating in-Place Strength:
    a. Estimate in place strength in accordance with MnDOT 2461.3.G.6.a(3).

C. Early-strength concrete shall achieve sufficient strength to be opened to traffic within three days of placement, or earlier if the compressive strength of 3000 psi is achieved.

D. Changes in Concrete Mixture:
    1. Conform to MnDOT 2461.3.G.6.d.

3.10 BACKFILLING

A. Backfill to protect the concrete and perform vibratory operations adjacent to concrete no sooner than 72 hours after placement of the concrete, after concrete field control strength cylinders have reached a compressive strength of at least 3,000 psi, or concrete strength by maturity testing has reached a compressive strength of 3,000 psi.
    1. Concrete field control strength cylinders will only be cast when requested by contractor in accordance with 1.05.A.

3.11 WORKMANSHIP AND FINISH

A. Conform to MnDOT Spec. 2521.3.D.3.

B. Acceptance of Work by price reduction will not be allowed.

3.12 FIELD QUALITY CONTROL

A. Any sidewalk, driveway, pedestrian ramp, etc. damaged by the Contractor shall be removed and replaced by the Contractor, and will be incidental to the Project.

B. The Owner shall have an independent testing laboratory perform the following tests as a minimum. The test locations will be determined by the Engineer:
    1. 1 air entrainment test per day, per Project (per concrete mix).
    2. 1 slump test per day, per Project (per concrete mix).
    3. 1 set of cylinders for compression test per day, per Project (per concrete mix).
        a. Additional cylinders may be cast to be tested to confirm when concrete has reached maturity.

C. The Contractor will be responsible for maturity testing per day that concrete is being poured on the Project (per concrete mix) when a bid item is provided. Refer to Section 32 16 13, Paragraph 3.10.

**END OF SECTION**


© 2026 City of Cottage Grove, Minnesota

This Page Left Blank Intentionally

# SECTION 32 16 13

# CONCRETE CURBS AND GUTTERS

## PART 1 GENERAL

1.01 SUMMARY

A. Section Includes:
   1. Cast-in-place concrete curb and gutter.

B. Related Sections:
   1. Section 02 41 13 - Selective Site Demolition.
   2. Section 32 11 23 - Aggregate Base Courses.

1.02 PRICE AND PAYMENT PROCEDURES

A. Measurement and Payment:
   1. Concrete Curb and Gutter: Measurement per linear foot measured along the face of the curb at the gutter line for each type. Payment shall include materials, preparation, placement, finishing, curing, protection, and backfilling. Measurement shall not include frames/castings that are located along the face of curb.
   2. Remove and Replace Concrete Curb and Gutter: This Bid Item shall be used for all concrete curb and gutter removed and replaced on this Project without regard to type or size and is assumed to be all hand placed. Measurement per linear foot along the face of curb. Payment will include all costs, including labor, materials, and equipment necessary to complete the work, including sawcutting at the removal limits and disposal of the material per Section 02 41 13, stripping and offsite disposal of soil per Section 31 00 00, construction of new curb and gutter, and patching of adjacent street.
   3. Maturity Testing for Compressive Strength: Per Section 32 13 14.
   4. No separate measurement or payment for modifications at driveways, pedestrian ramps, transition sections, or B618 curb installed at catch basins and radii.
   5. All other Work and costs of this Section shall be incidental to the Project and included in the Total Base Bid.

1.03 REFERENCES

A. American Society of Testing Materials (ASTM):
   1. C260 - Air-Entraining Admixtures for Concrete.

B. Minnesota Department of Transportation “Standard Specifications for Construction”, 2025 Edition (MnDOT Spec.):
   1. 1503 - Conformity with Contract Documents.
   2. 2211 - Aggregate Base.
   3. 2461 - Structural Concrete.
   4. 2531 - Concrete Curbing.
   5. 3101 - Portland Cement.
   6. 3113 - Admixtures for Concrete.


© 2026 City of Cottage Grove, Minnesota

7. 3702 - Preformed Joint Fillers.
8. 3754 - Poly-Alpha Methyl Styrene (AMS) Membrane Curing Compound.

1.04 SUBMITTALS

A. Submit MnDOT approved design mix for each concrete mix designation used.

B. If utilized on a project, the Contractor is responsible for developing the maturity curve for each specified mix and taking maturity readings. See Section 32 13 14.

1.05 SEQUENCING AND SCHEDULING

A. All temporary stockpile located within the boulevard area or other areas behind the concrete curb and gutter must be removed prior to curb placement.

B. Concrete curb and gutter construction precedes installation of pavement.

C. Provide notice by 2:00 P.M. of the day prior to any concrete curb and gutter placement, to allow time for scheduling of the following activities. Notice must include mix designation, start time of placement, plant producing concrete, and Foreman onsite during placement:
   1. Aggregate base DCP tests (per Section 32 11 23) prior to any concrete curb being placed.
   2. Inspection of curbing operations by a City representative. No curbing will be allowed or accepted without inspection.
   3. Concrete field and plant testing if required.

D. Horizontal and vertical alignment established with “stringline” and or forms for concrete curb and gutter placement shall be approved by the Engineer prior to concrete placement. Notify the Engineer a minimum of 4 hours (one half day) prior to placement of concrete to allow for review and approval.

E. Complete backfilling within 6 days of original placement, or per applicable in Milestones per Section 00 52 10, Paragraph 4.02.

F. All concrete placed between October 1 and October 15 must be high early strength concrete.

G. Under no circumstances will concrete be allowed to be placed after October 15, without prior approval from the Engineer.

**PART 2 PRODUCTS**

2.01 MATERIALS

A. Concrete to Conform to MnDOT Spec. 2461, except as modified herein:
   1. Portland Cement: Conform to MnDOT Spec. 3101:
      a. Type 3 air-entraining concrete produced by using Type I Portland Cement.
   2. Air-Entraining Admixtures: Conform to MnDOT Spec. 3113:
      a. Conforming to ASTM C260.
      b. Not to be added to the concrete mixtures in the field without approval from Engineer.


© 2026 City of Cottage Grove, Minnesota

3. Mix Designation and Classification for Concrete Curb and Gutter:
    a. Manual Placement Mix No. 3F52.
    b. Slip Form Placement Mix No. 3F32.

B. Pre-Formed Joint Filler: Conform to MnDOT Spec. 3702.

C. Curing Compound: Conform to MnDOT Spec. 3754, except as modified below:
1. Curing compound shall contain a fugitive dye.
2. Remove and Replace Concrete Curb and Gutter (spot repairs): Curing compound shall conform to ASTM C309, Type 1-D, clear with fugitive dye, Class B applied at a rate of 200 square feet per gallon.

**PART 3 EXECUTION**

3.01 GENERAL

A. Concrete contractor shall have at least two people with a current ACI concrete flatwork technician or flatwork finisher certification, and at least one of them must be onsite for all concrete pours.

B. Provide copies of batch tickets for concrete mix at the time of material delivery to the Site.

C. Construct concrete curb and gutter at the locations and elevations indicated on the Drawings. Any concrete curb and gutter that is longer than 200 linear feet continuously, shall be placed using slip form placement.

D. Construct the style or type of curb and gutter as shown on the Drawings.

E. Construct intersection curb radii and transitions to conform to the detail on the Drawings.

F. Construct transition sections at inlet structures to conform to the detail on the Drawings.

G. Construct concrete curb ramp depressions to conform to the detail on the Drawings.

H. Construct curb transitions for driveways to conform to the detail on the Drawings. Locations to be verified by Engineer at the time of construction.

I. Stamp the concrete curb and gutter for sewer and water service locations conforming to Standard Detail Plate STR-11.
1. Stamping must conform to the dimensions indicated on the detail plate.
2. The location of the “W” & “S” shall be located on the face of the concrete curb.
3. The location of the “W” & “S” stamp shall be staked by the engineer.
4. Stamping of the service locations shall be considered incidental to the placement of the concrete curb.
5. “W” & “S’s” not placed by the specified stamp will not be accepted and will require removal and replacement.

J. The completed concrete work shall give the appearance of uniformity in surface contour and texture, and shall be accurately constructed to line and grade. The required joints, edges, and flow lines shall show neat workmanship. The concrete curb shall be in full accordance with the


© 2026 City of Cottage Grove, Minnesota

Standard Detail Drawings. Any deviations from the Standard Detailed Plates may be cause for removal and replacement at the Contractor's expense. No price reduction will be allowed as a means to correct the deviations.

K. Re-tempering of the concrete which has partially hardened with or without additional materials or water is prohibited.

L. Concrete washout locations shall conform to the requirements of the NPDES.

3.02 FOUNDATION PREPARATIONS

A. Support on a compacted aggregate base extending 1 foot behind the back of curb:
   1. Conform to typical sections as shown on the Drawings.
   2. Conform to Section 32 11 23 and MnDOT Spec. 2211.3.D.2.c.

3.03 FORMS

A. Conform to MnDOT Spec. 2531.3.B.

3.04 JOINT CONSTRUCTION

A. Conform to MnDOT Spec. 2531.3.E, except as modified herein:
   1. Contraction joints: Maximum of 10 foot intervals.
   2. Transverse expansion joints:
      a. 400 foot intervals.
      b. Adjacent to hand placed or existing curb.
   3. Contraction joints shall be tooled. Sawed joints not allowed.

3.05 PLACING AND FINISHING

A. Conform to MnDOT Spec. 2531.3.C, except as modified herein:
   1. The top surface of the curb and gutter shall have a brush finish at right angles to the curb line.

3.06 CONCRETE CURING AND PROTECTION

A. Conform to MnDOT Spec. 2531.G and 2531.3.G.1.a, except as modified herein:
   1. Coat all surfaces with membrane curing compound within 30 minutes of concrete placement unless otherwise directed by Engineer.
   2. The membrane-curing compound must be applied in 2 different directions perpendicular to each other to provide a uniform solid white opaque coverage (equal to a white sheet of typing paper) on all exposed concrete surfaces.
   3. A second application of membrane curing compound shall be applied 4 to 8 hours after the first application at the specified rate.
   4. Protect concrete against hot weather conditions as defined in the PCA Design and Control of Concrete Mixtures as when the rate of evaporation of bleed water per hour exceeds 0.2 lb. of water per square foot per hour. A chart published by the ACI and PCA can be used to predict the bleed water rate.


© 2026 City of Cottage Grove, Minnesota

5. Cold weather curing, when temperatures fall below 40 degrees during placement or within the following 24 hours, shall conform to MnDOT Spec. 2531.3.G.3.a and 2531.3.G.1.b blanket curing method or method approved by the Engineer, except as modified below:
    a. If temperatures are projected to fall below 32 degrees within 24 hours of concrete placement, insulated blankets shall be using for curing.
    b. All costs associated with blanket curing shall be incurred by the Contractor.
6. Failure to comply with these provisions will result in a price reduction for the concrete curb and gutter Bid Item involved in accordance with MnDOT Spec. 1503.
7. The freshly finished surface shall be protected. Surfaces pitted by rain will be considered unacceptable.
8. Removal and replacement of any curb section damaged by traffic, rain, cold weather, or other causes occurring prior to final acceptance shall be the responsibility of the Contractor.

3.07 BACKFILLING

A. Backfill to protect the concrete and perform vibratory operations adjacent to concrete no sooner than 72 hours after placement of the concrete, after concrete field control strength cylinders have reached a compressive strength of at least 3,000 psi, or concrete strength by maturity testing has reached a compressive strength of 3,000 psi.
    1. Concrete field control strength cylinders will only be cast when requested by contractor in accordance with 1.05.A.
    2. Tolerance within 0.3 feet to the top of curb elevation.

3.08 HIGH EARLY CONCRETE

A. Conform to MnDOT Spec. 2461.2.E.2.b(2), except as modified herein:
    1. High early concrete shall be designed to provide a maximum water/cementitious ratio of 0.42.
    2. High early concrete shall be designed to provide a minimum flexural strength of 500 psi and a minimum compressive strength of 3,000 psi in 48 hours.
    3. High early concrete may be included as a separate Bid Item.

3.09 REMOVE AND REPLACE CONCRETE CURB AND GUTTER

A. It is anticipated that sections of curb and gutter or sidewalk may be cracked, broken or have settled over time. Removal and replacement will be identified by the Engineer as part of a street rehabilitation type project.

B. Sawcut at removal limits per Section 02 41 13.

C. Do not disturb any material beyond the limits required to form for new construction (assumed 2 feet maximum from the back and 6 inches beyond the edge of new work).

D. Complete stripping and offsite disposal of soil per Section 31 00 00.

E. Install new curb and gutter as described previously in this Section.

3.10 CONCRETE STRENGTH BY MATURITY TESTING

A. Refer to Section 32 13 14, Paragraph 3.09.


© 2026 City of Cottage Grove, Minnesota

3.11 WORKMANSHIP AND FINISH

A. Conform to MnDOT Spec. 2531.3.I, except as modified herein:
   1. Any deviation in the design curvature of concrete edges in excess of 3/8 of an inch, measured with a 10 foot straight edge, will be considered unacceptable.
   2. Acceptance of Work by price reduction will not be allowed.

3.12 FIELD QUALITY CONTROL

A. Any curb damaged by the Contractor shall be removed and replaced by the Contractor, and will be incidental to the Project.

B. The Owner shall have an independent testing laboratory perform the following minimum tests. The test locations shall be determined by the Engineer:
   1. 1 air entrainment test per day, per Project (per concrete mix).
   2. 1 slump test per day, per Project (per concrete mix).
   3. 1 set of cylinders for compression tests per day, per Project (per concrete mix).
      a. Additional cylinders may be cast to be tested to confirm when concrete has reached maturity.

C. The Contractor will be responsible for maturity testing per day that concrete is being poured on the Project (per concrete mix).

**END OF SECTION**


© 2026 City of Cottage Grove, Minnesota

# SECTION 32 17 23

# PAVEMENT MARKINGS

## PART 1 GENERAL

1.01 SUMMARY

A. Section Includes:
   1. Pavement markings for control and guidance of traffic.

B. Related Sections:
   1. Section 01 33 00 - Submittal Procedures.

1.02 PRICE AND PAYMENT PROCEDURES

A. Measurement and Payment:
   1. Lines: Per linear foot of length actually applied, regardless of color. Separate measurement will be made for each type, width, and installation method.
      a. Double yellow lines shall be measured to include both lines per linear feet of quantity because they are applied simultaneously.
      b. For the paint pavement markings applied in two layers, the second application shall be measured the same as the first application; for example: 1,000 LF of application painted twice would be paid as 2,000 LF.
      c. Temporary lane lines installed immediately following final wear course paving until permanent lane lanes are installed shall be considered incidental to the line bid item.
   2. Messages: Per each applied. Separate measurement will be made for each type and installation method.
   3. Payment of each Bid Item shall be compensation in full for all costs incidental thereto, including but not limited to surface preparation including grinding when specified, traffic control measures, protection of and maintaining the Work, together with any other expenses incurred in completing the Work that are not specifically included for payment under the Contract Bid Items.
   4. All other Work and costs of this Section shall be incidental to the Project and included in the Total Base Bid.

1.03 REFERENCES

A. Minnesota Department of Transportation “Standard Specifications for Construction”, 2025 Edition (MnDOT Spec.):
   1. 2582 - Pavement Markings.
   2. 3356 - Preformed Thermoplastic.
   3. 3590 - Multi-Component Liquid Pavement Markings (Multi Comp).
   4. 3591 - Water-Based Traffic Paint.
   5. 3592 - Drop-On Glass Beads.

B. MnDOT Application Specification for Conventional Pavement Marking Materials 3-Minute Dry Alkyd and High Solids Latex.


© 2026 City of Cottage Grove, Minnesota

C. MnDOT Temporary Traffic Control Zone Layouts – Field Edition.

1.04 SUBMITTALS

A. Submit the following consistent with Section 01 33 00:
   1. 1 copy of the chosen multi-component lot or batch formulation.
   2. Pavement Marking Contractor Qualifications/Certifications.
   3. MnDOT Certification approvals.

1.05 SEQUENCING AND SCHEDULING

A. Prime Contractor is responsible for scheduling an onsite pre-signing meeting with the Owner, Engineer, and Signing Subcontractor (if appropriate) a minimum of 24 hours prior to the installation of any signing.

B. Conform to the requirements of MnDOT Spec 2582.3 except as modified herein:
   1. Multi-Component Liquid Pavement Markings:
      a. Place ground-in markings within 24 hours of completion of the wear course bituminous paving and following the grinding operations.
      b. Place non-ground-in markings per manufacturer recommendations.
   2. Temporary Paint Pavement Markings:
      a. Place immediately following completion of the final bituminous wearing course or interim bituminous course.
      b. Place immediately after allowing the pavement surface to cool.
   3. Pavement Markings Thermoplastic:
      a. Place following bituminous wearing course placement.
      b. Place all markings indicated as pavement marking thermoplastic on Drawings.

C. Complete application of pavement markings under traffic.

**PART 2 PRODUCTS**

2.01 MATERIALS

A. Paint:
   1. Conform to MnDOT Spec 3591.2 except as modified herein:
      a. High Solids Water Based:
         1) Free of toxic heavy metals, including lead, mercury, and cadmium.
         2) Track Free Time - 3 minutes or less.
         3) Yellow Prime Pigment - Color Index Pigment Yellow No. 65 or No. 75.
         4) White Color - Flat white.
         5) Yellow Color - Color No. 33538 of Federal Standard 595.
      b. 3-Minute Dry Alkyd:
         1) Free of toxic heavy metals, including lead, mercury, and cadmium.
         2) Track Free Time - 3 minutes or less.
         3) Yellow Prime Pigment - Color Index Pigment Yellow No. 65 or No. 75.
         4) White Color - Flat white.
         5) Yellow Color - Color No. 33538 of Federal Standard 595.


© 2026 City of Cottage Grove, Minnesota

B. Preformed Thermoplastic Pavement Marking:
   1. As manufactured by Ennis-Flint or approved equal.
      a. White Lines: 125mil Premark Preformed Thermoplastic.
      b. Arrows: Premark Preformed Thermoplastic – 8330241L (Left Turn), 8330241R (Right Turn), 8330240 (Straight), 8330142L (Combination Left-Straight), 8330142R (Combination Right-Straight).
      c. Sealer: 600/300 two part sealer tube, #7 – 102EF.
   2. http://www.ennisflintamericas.com.

C. Glass Beads:
   1. Conform to MnDOT Spec. 3592.

D. Multi-Component Liquid Pavement Markings (Multi Comp):
   1. Conform to MnDOT Spec. 3590.

2.02 EQUIPMENT

A. General:
   1. Vehicles used shall be deployed and equipped with traffic control devices set forth in the "Minnesota Manual on Uniform Traffic Control Devices, Field Manual."
   2. Shadow vehicle with truck-mounted attenuator shall be used on streets with posted speed equal to or greater than 40 M.P.H. or ADT greater than 1,500 vehicles per day.
   3. Equipment used for spray applications shall be capable of applying glass beads by a pressurized system at a rate of at least 25 lbs/gal.
   4. Capable of accumulating footage applied per gun.
   5. Stainless steel components in the delivery system required for water-based materials.
   6. The only acceptable equipment for installation of Premark Thermoplastic is an infrared heater (Street Heat SR-20 or SR-28 as manufactured by Ennis-Flint).

**PART 3 EXECUTION**

3.01 GENERAL

A. The pavement marking crew shall include at least 1 technical expert knowledgeable in each of the following areas:
   1. Equipment operation.
   2. Application techniques.
   3. Traffic control.
   4. Safety regulations.

B. Pavement marking type shall be as noted below unless otherwise modified in the project plans:
   1. Temporary or Interm street lines and symbols – non ground in paint.
   2. Permanent symbols all applications– ground in paint.
   3. Permanent lane lines on all streets – ground in multi-component.
   4. Permanent crosswalks on residential streets – non ground in paint.
   5. Permanent crosswalks on collector streets – ground in paint.
   6. Permanent lines on parking lots – non ground in paint (applied twice).


© 2026 City of Cottage Grove, Minnesota

C. Conform to MnDOT Spec. 2582.3.B.7 Recessing for all recessed pavement markings.

D. The filling of tanks, pouring of materials, or cleaning of equipment shall not be performed on unprotected pavement surfaces, unless adequate provisions are made to prevent spillage of material.

E. Thermoplastic pavement markings installers must show proof of certification for Premark Thermoplastic installation.

3.02 PREPARATION

A. Locations:
   1. In general accordance with the Drawings:
      a. Location of marking designating no passing zones to be coordinated with corresponding traffic signs.
   2. The Engineer will place necessary "Spotting" at appropriate points:
      a. Horizontal control.
      b. Starting and stopping points.
      c. Broken line intervals will not be marked.
      d. Longitudinal joints, pavement edges, and existing markings shall serve as horizontal control when so directed.
      e. Notify Engineer at least 48 hours in advance when requesting spotting locations.
   3. Edge lines and lane lines are to be broken only at intersections with public roads and at private entrances if they are controlled by a yield sign, stop sign, or traffic signal.
   4. The break point is to be at the start of the radius for the intersection or at marked stop lines or crosswalks.

B. Street Surface:
   1. Engineer may direct cleaning of surface as necessary immediately prior to marking application:
      a. Brushing with non-metallic rotary broom.
      b. Other cleaning method approved by Engineer.
      c. Air blast following cleaning.
   2. Surface must be dry.
   3. Minimum surface temperature is 50 degrees F.

C. Traffic Control:
   1. Conform to latest edition of MnDOT “Temporary Traffic Control Zone Layouts – Field Edition."
   2. Shadow vehicle with truck-mounted attenuator shall be used on streets with posted speed equal to or greater than 40 M.P.H. or ADT greater than 1,500 vehicles per day.

3.03 APPLICATION

A. General:
   1. Tolerance:
      a. Width: A tolerance of 1/4 inch under or 1/4 inch over the specified width will be allowed for striping provided the variation is gradual and does not detract from the general appearance.


© 2026 City of Cottage Grove, Minnesota

b. Length: Broken line segments may vary up to 2-3/4 inches from the specified lengths provided the over and under variations are reasonably compensatory.
c. Alignment: Deviations from the control guide shall not exceed 2 inches.
d. Establishment of application tolerances shall not relieve the Contractor of his responsibility to comply as closely as practicable with the planned dimensions.

2. Material shall not be applied over longitudinal joints.
3. 4 inch broken line consists of 10 feet of paint and 40 feet space (1 cycle).
4. If same equipment used for different color material with change in color, an amount of material equal to fifteen 10 foot long stripes shall be wasted prior to beginning application with the new color.
5. Conditions:
   a. Markings shall not be applied when wind or other conditions cause a film of dust to be deposited on the pavement surface after cleaning and before the marking material can be applied.
   b. Except when used as a temporary marking, pavement markings shall only be applied in seasonable weather when air temperature is 50 degrees F or higher.

B. Glass Beads:
1. Shall be applied immediately after application of paint or multi-component markings.
2. Rate of application shall be 8 lbs. per gallon.

C. Pavement Marking Thermoplastic:
1. Grind pavement surface prior to application.
2. Apply per the manufacturer's instructions for application requiring EF 2-part sealer.
3. Width of thermoplastic must match design pavement marking width. For example, 12-inch wide thermoplastic must be used for 12-inch stop bar. Two 6-inch wide strips of thermoplastic will not be allowed to be used to create a 12-inch stop bar.

D. Multi-Component Liquid Pavement Markings:
1. Conform to MnDOT Spec. 2582.

## 3.04 CORRECTION OF DEFECTS

A. All pavement markings not conforming to the requirements of the Specifications shall be removed and replaced, or otherwise repaired to the satisfaction of the Engineer.

B. Where yield computations show a deficiency in material usage of not more than 20-percent, Owner may require satisfactory repair or may accept the Work at a reduced Bid Unit Price that is in direct proportion to the percent of the deficiency.

C. Where yield computations show a deficiency in material usage in excess of 20-percent, Owner will require removal and replacement to the satisfaction of the Engineer, unless other means are approved by the Engineer.

D. If removal and replacement is required, at least 90-percent of the deficient line shall be removed.

E. Width of removal shall be 1 inch wider on all sides than the nominal width of the marking to be removed.


© 2026 City of Cottage Grove, Minnesota

F. Removal of unacceptable Work shall be accomplished with sand or water blasting equipment, unless other means are authorized by the Engineer. Bituminous street surfacing shall not be damaged by the removal operation.

**END OF SECTION**


© 2026 City of Cottage Grove, Minnesota

# SECTION 32 80 00

# IRRIGATION SYSTEM

## PART 1 GENERAL

1.01 SUMMARY

A. Section Includes:

1. Design, Furnish and install an underground irrigation system as conceptually shown on Drawings and as specified herein. The Irrigation Plan is for conceptual purposes only and it is the Contractor's responsibility to design the irrigation system addition and provide approved shop drawings for the irrigation system.

2. Work to be included under this Section shall consist of but not be limited to the following:
   a. Furnishing and installing automatic sprinkler heads.
   b. Sizing, furnishing, and installation of irrigation cabinet, booster pump, backflow preventer, underground piping and conduit including connections to the existing water main and water service into the irrigation cabinet.
   c. Supply of power, electrical connections, and necessary equipment for complete operation to supply irrigation system with required volume of water.
   d. Installation, connection, and adjustment of Irrigation Control System, including controller adjustment, control valves and all control wire sized appropriately.
   e. Installation of required thrust blocks.
   f. Installation of concrete equipment pad for service cabinet.
   g. Installation of concrete equipment pad for service cabinet.
   h. Other miscellaneous work shown on the plans or specified herein.
   i. Warranty and system start-up and shut down as specified herein.

B. Related Sections:

1. Section 26 05 59 - Irrigation System Electrical Supply.

2. Section 32 14 13 - Concrete Walks, Medians, and Driveways.

1.02 PRICE AND PAYMENT PROCEDURES

A. Measurement and Payment:
1. Irrigation System: Measurement per lump sum and shall include irrigation design, equipment, materials, labor to furnish and install the irrigation system as shown on the Drawings and as specified including supply of power, and as-built drawings.

1.03 REFERENCES

A. Minnesota Department of Transportation "Standard Specifications for Construction", 2025 Edition (MnDOT Spec.):

1. 2461 - Structural Concrete.

2. 3801 - Electrical Systems Materials.

1.04 SUBMITTALS

A. Submit all required items before commencement of Work in accordance with Section 01 33 00.


© 2026 City of Cottage Grove, Minnesota

B. Shop drawings

1. Provide irrigation design to Engineer prior to commencement of Work.
2. For each item specified in the Drawings, provide information showing detail, location, and manufacturers product information.

C. Contractor shall provide record drawings, operations and maintenance manuals, and warranty information to the Engineer at the completion of the project.

1.05 SEQUENCING AND SCHEDULING

A. Prior to starting work, submit a schedule showing the order and completion of Work for review and approval by Owner.

B. Contractor shall install irrigation crossings under streets, trails, and sidewalk prior to placement of aggregate backfill and/or aggregate base course on streets, trails, and sidewalks.

C. All irrigation system components other than conduit crossings shall not be installed until all utility, concrete, bituminous, topsoil placement and finish grading, and site furnishings have been completed.

D. Irrigation system shall be installed and fully operational prior to turf restoration.

1.06 QUALITY ASSURANCE

A. Qualifications

1. Contractor: Must be a Minnesota Licensed Technology System Contractor in “good standing” with the Minnesota State Board of Electricity at the time of bid submission. Contractor shall also currently employ a licensed Power limited technician which is required by law to work on irrigation system.
2. Contractor must provide at least one person at all times during execution of this portion of work who is thoroughly familiar with the type of materials being installed and is directly responsible for all work performed under this Section.

B. As-Built Drawings

1. Contractor shall prepare and maintain accurate record drawings of all underground concealed work.

1.07 DELIVERY, STORAGE, AND HANDLING

A. Delivery and Acceptance

1. Package to prevent damage during shipment, handling, storage, and installation. Maintain protective covering in place and in good repair until removal is necessary.
2. Contractor shall remove all shipping materials as necessary to inspect products for damage immediately upon delivery and coordinate inspection by Owner’s Representative.

B. Storage and Handling

1. Contractor shall repack and store products in a secure area and protect from damage and adverse environmental conditions until installation is performed. Products shall be protected from damage during handling and installation.


© 2026 City of Cottage Grove, Minnesota

C. Waste Management and Disposal

1. Dispose of all waste generated from packaging and installation as in accordance with applicable regulations.

2. Any excess material is the property of the Contractor and shall be disposed of off-Site.

1.08 WARRANTY

A. Upon completion of irrigation system installation and training, and initial acceptance of Engineer, Contractor shall warranty all materials and workmanship for the period of One Year and shall include one complete operating season from Start-up to shut down. Any defects in materials, needed repairs, adjustments and required maintenance will be responsibility of Contractor at no additional cost to the Owner.

B. At end of One Year warranty period, the Contractor shall conduct a thorough review of the complete irrigation system with Owner's Representative and make any needed repairs or adjustments necessary at no additional cost to the Owner.

C. Included in the irrigation system warranty, the Contractor shall complete the initial start-up of the system, system shut down and winterization at end of the first season, and system start-up the following season. These services shall be performed under the supervision of the Owner's representative and performed at no additional cost to the Owner.

1.09 OPERATIONS AND MAINTENANCE MANUALS AND TRAINING OF MAINTENANCE PERSONNEL

A. The Contractor shall provide four (2) copies of operation and maintenance manuals for the all portions of the irrigation system, including sprinklers and automatic control system. The manuals shall be prepared specifically for the equipment furnished and shall include all required catalog cut sheets, drawings, instructions and other materials required to instruct operating and maintenance personnel in the proper use, adjustment, operation and repair of equipment furnished.

B. Upon completion of the work and acceptance by the owner, the Contractor and/or supplier shall be responsible for the training of maintenance personnel in the operation and maintenance of the automatic control system and pop-up sprinklers. The Contractor and/or supplier of the control system shall set the initial watering schedules and programming of the automatic control system in the presence of City maintenance staff. The initial programming shall be as required by the Owner to meet the needs of the facility. Changes in the programming and instructions on how to make such changes shall be the responsibility of the supplier.

**PART 2 PRODUCTS**

2.01 MATERIALS

A. General:

1. All irrigation components shall be manufactured by Rain Bird Corporation as shown in the plans and details.

2. All materials incorporated into this system shall be new and without flaws or defects and of quality and performance as specified and meeting the requirements of this system. All materials shall have a minimum guarantee of one year against material defects or defective workmanship.


© 2026 City of Cottage Grove, Minnesota

3. Any material specified by name and/or model in the specifications or on the plans shall be deemed to be used for the purpose of identifying the materials and insuring the specific use of that material in the construction of the system. No substitutions will be permitted without the prior written approval by the Engineer or Owner.

B. Pipe:

1. Pipe shall be Class 160 PVC pipe. The pipe shall be made from clean, virgin N.S.F. Approved Type 1, Grade 1 (PVC 1120) PVC conforming to ASTM resin specifications D1784 - 60T. Pips shall be pressure rated for 160 psi @ 73.4 degrees F. and shall meet requirements set forth in Commercial Standard C.S. 256-63 with standard dimension ratio SDR-26. All PVC pipe 3 inch in diameter or greater shall have rubber gasket joints. All PVC pipe less than 3 inch in diameter shall be belled end with solvent weld joints.
2. All Swing Joints shall be constructed of Schedule 80 PVC with threaded and coupled ends as manufactured by Spears Manufacturing Co., Sylmar, California, or approved equal.
3. Pipe Identification:
    a. Pipe shall be continuously and permanently marked with the following information: Type of pipe, working pressure at 73.4 degrees F., and N.S.F. approval.
4. Pipe Delivery:
    a. All pipe shall be delivered to the site in unbroken bundles, packaged in such a manner as to provide adequate protection for the pipe ends, either threaded or plain.

C. Pipe Fittings and Connections:

1. All fittings for pipe 4 inches and over shall be ductile iron.
2. All pipe fittings 2 inches and under to be installed shall be molded fittings manufactured of the same material as the pipe and shall be suitable for either solvent weld or screwed connections. No fittings of other material shall be used.
3. When connecting plastic to metal, male adapters shall be used. The male adaptor shall be hand tightened, plus one turn with a strap wrench. Threaded joints shall be coated with Teflon tape.

D. Pop-Up Sprinklers:

1. All irrigation heads shall be manufactured by Rain Bird Corporation. Verify with Owner's representative prior to installation.
    a. Turf Spray: Rain Bird 1804-PRS 15 Strip Series.
    b. Shrub Spray: Rain Bird 1812 15 Strip Series.
    c. Shrub Rotary: Rain Bird R-VAN24 1812-SAM-P45.
    d. Turf Rotor: Rain Bird 3504-PC-SAM 2.0.
    e. Turf Rotor: Rain Bird 5004-PC-R-LA.
2. All rotary pop-up sprinklers shall be provided with an on-off-auto-manual selector accessible from the surface with a special key.
3. Pressure regulation shall be preset by the factory according to nozzle set.


© 2026 City of Cottage Grove, Minnesota

E. Wire:

1. All wire will be of sufficient size for its intended end use.
2. All electrical control and ground wire used to connect automatic remote control valves to the controllers shall be 600 volt, solid copper with PVC insulation and have UL approval for type UF. All control wire shall be of different colors and common wire shall be white with green stripe. Minimum wire size shall be 14 gauge.
3. Splices of wire in the field must be absolutely waterproof so there is no chance for moisture or corrosion build-up on the joint. Requires 3M DBY or DBR Splice Kit.

F. Conduit for Wire:

1. Conform to section 26 05 59 Irrigation System Electrical Supply 2.01.

G. Concrete:

1. Concrete used in thrust blocks shall be a mix of one part cement, two parts sand and three parts gravel (washed sand and gravel should be used) and will be “dry” or “stiff” mix (minimum amount of water).
2. Concrete used for control cabinet base shall conform to 32 13 14 2.01.A except as modified herein:
    a. Slab and Concrete Pad Mix No. 3F52A.
    b. Foundation: conform to MnDOT 2461.2 mix design 1G52.
    c. Curing Compound: conform to section 32 13 14 2.01.D.

H. Irrigation Control Cabinet:

1. Size as required to contain piping, fittings, backflow preventer, valves, meter, irrigation controller, and booster pump if required.
2. Manufactured by Povolny Specialties Inc. or approved equal.

I. Irrigation System Control:

1. Irrigation Controller shall be Rain Bird 2-Wire Decoder controller. All control valves shall be compatible with specified controller and be manufactured by Rain Bird Corporation. Shop drawings shall identify type, size, and location.
2. See plan for approximate location of controller and POC. Coordinate and verify with Owner on connection configuration and location prior to installation.
3. System controller must be capable of managing area as identified in the Drawings.

J. Booster Pump:

1. See section 26 05 59.

K. Valve and Box:

1. Remote control valve Model Rain Bird PEB-IVM.
2. Quick coupling valve model Rain Bird 3-RC ¾”.
3. Valve box- N lock bolt and Q.C. heat bonded on cover.


© 2026 City of Cottage Grove, Minnesota

L. Drip Irrigation

1. Salco flexible PVC line ¾ inch diameter.

**PART 3 EXECUTION**

3.01 STAKING

A. The Contractor shall stake out all proposed lines prior to trenching operations. Contractor must have engineer and Owner approval prior to trenching. Contractor responsible for verification of existing drain tile locations prior to trenching.

B. The location of the stakes will be checked by the Engineer or Owner prior to trenching or plowing.

C. Location of controllers shall be as directed by the Engineer or Owner, but near the locations indicated on the Drawings.

D. Stakes shall be clearly marked to designate the type of equipment to be installed at that point. The Contractor shall maintain the stakes until all equipment is in place and the location of all equipment is properly indicated on the record drawings.

E. The Contractor shall replace any stakes disturbed to the correct position.

3.02 ADJUSTMENTS

A. Where minor adjustments to the system layout may be required, as in connections to existing piping or in working around existing structures, the Contractor shall make the required adjustments at no additional cost to the Owner.

3.03 PROTECTION

A. Actual construction on the site will cease during heavy rains or other inclement weather that will adversely affect the quality of the work or cause damage to the site.

B. Work will be allowed to resume when, in the opinion of the Owner or Engineer, conditions are such that no excessive damage to the existing turf will occur.

C. The Contractor shall utilize equipment and methods that will result in the least possible damage to the existing turf.

D. The Contractor is responsible to protect all installed components of the irrigation system until the final restoration has been accepted. Any damage to system prior to acceptance of restoration will be replaced by Contractor at no cost to Owner.

3.04 EXCAVATION

A. Contractor shall perform all excavation of every description and of whatever substances encountered, to the depth indicated on drawings or as otherwise specified. Contractor shall supply sleeves for his/her piping to pass under roads and walkways. During excavation, material suitable for back filling shall be placed in piles in an orderly manner, a sufficient distance from the banks of the trench to avoid sliding or sloughing back into the trench. All material not required or suitable shall be removed and wasted in a designated area within the limits of the project as instructed by the Engineer. Such grading shall be done as may be necessary to prevent surface water from flowing into the trenches or other excavation and any water accumulating therein shall be removed by pumping or by other approved methods. Such sheeting and shoring shall be done as necessary to provide for the protection of the work and the safety of the personnel at no cost to owner.


© 2026 City of Cottage Grove, Minnesota

B. Any known existing water, sewer, drainage, electrical and other useful lines will be noted on the drawings or otherwise marked on the ground. It is the responsibility of the Contractor to repair any damage to existing materials. Repairs must be done to the satisfaction of the Owner.

C. The cutting of tree roots shall be avoided.

D. Where rocks and other abrasive substances are encountered, they shall be removed from the line of trenching and disposed of offsite or at a location within the project limits as instructed by the Engineer.

E. When placing sprinklers in existing turf, the Contractor shall place the excavated soil onto a drop cloth placed next to the hole.

3.05 INSTALLATION OF PIPE AND PIPE COMPONENTS

A. Pipe and accessories shall be handled in such a manner as to insure delivery to the trench in sound, undamaged condition. Particular care shall be taken not to injure pipe coating. If the coating or lining of any type of pipe or fitting is damaged, the repair shall be made by the Contractor, at his/her expense, satisfactory to the Owner. Pipe shall be carried into position, not dragged. The interior of the piping and accessories shall be thoroughly cleaned of foreign matter before being lowered into the trench and should be kept clean during laying operations by plugging or other approved method. Before installation the pipe shall be inspected for defects by the Contractor. Material found to be defective before or after laying shall be replaced with sound material without additional expense to the Owner. Rubber gaskets that are not to be installed immediately, shall be stored in a cool dark place and out of the direct rays of the sun.

B. All wiring shall be laid alongside the pipe.

C. Cutting of pipe shall be done in a neat and workmanlike manner without damage to the pipe. The edge shall be true and at a right angle to the pipe. The end shall be reamed out to the original diameter of the pipe. Unless otherwise authorized by the Owner or recommended by the manufacturer, cutting shall be done with an approved mechanical cutter.

D. When work is not in progress, exposed ends of pipe, fittings and valves shall be securely closed so that no trench water, earth, or other substance will enter the pipe or fittings.

E. All pipe shall be installed in accordance with manufacturer's recommendations.

F. Where solvent joints are used, only solvent recommended by the pipe manufacturer should be used. The solvent weld joints shall be made in the following manner:

1. Thoroughly clean the mating pipe and fitting with a clean, dry cloth. Use of an approved liquid primer, purple in color shall be used.
2. Apply a uniform coat of solvent to the outside of the pipe with a non-synthetic bristle brush.
3. Apply solvent to fitting in a similar manner.
4. Re-apply a light coat of solvent to the pipe and quickly insert it into the fitting.
5. Give the pipe or fitting a quarter turn to insure even distribution of solvent and made sure the pipe is inserted to the full depth of the fitting socket.
6. Wipe off excess solvent that appears at the outer side of the fitting.
7. Care should be taken as to not use an excess amount of solvent, thereby causing a burr or obstruction to form on the inside of the pipe.


© 2026 City of Cottage Grove, Minnesota

8. The joints shall be allowed to set at least 12 hours before pressure is applied to the system.

3.06 SLEEVES

A. The Contractor shall provide sleeves where shown on plans.

3.07 INSTALLATION OF CONTROL WIRE

A. All control shall be installed in the piping trenches wherever possible. Wire shall be snaked into the trench as loose as possible and with as much slack as possible to allow for expansion and contraction of the wire.

B. If it is so desired, rather than leaving slack in the wire, expansion joints in the wire may be provided at 200 foot intervals by making 5 to 6 turns of the wire around a 1 inch piece of plastic pipe.

C. The wire shall be installed alongside the pipe. Where it is necessary to run wire in a separate trench, the wire shall be installed at a depth of not less than 24 inches.

D. Control wire between the automatic controller and the remote control valves shall be laid in the pipe trenches not less than 18 inches deep, and via the shortest main line route between controller and valve. Control wire shall then be placed into the trench to one side of the pipe in as loose a manner as possible to allow for expansion and contraction. Extra wire in the form of expansion joints shall be left at all connections and valves.

3.08 INSTALLATION OF THRUST BLOCKS

A. Concrete thrust blocks must be provided on the thrust side whenever the pipe line:

1. Changes in direction, as at tees and bends.

2. Changes in size, as at reducers.

3. Stops, as at a dead end.

4. At valves where thrust may be expected.

B. Thrust blocks are to be made of concrete and placed between the fitting and the trench wall. The concrete shall be fresh and extend to undisturbed (freshly cut) trench wall.

C. On the smaller sizes of pipe, up to and including 4 inch pipe, the construction of horizontal thrust blocks requires only the simplest of forms; the stiff concrete is shaped to block a wedge with its widest part against the solid trench wall; larger blocks require some form of construction at the sides and the top to achieve proper bearing area with a minimum amount of concrete. In a stable clay soil, a 4 inch line will require 2 square feet of bearing area, a 6 inch pipe will require 6 square feet of bearing area and a 10 inch pipe will require 16 square feet of bearing area.

D. If the ground is too soft to provide proper support for the thrust block, the Contractor will furnish and install clamps and tie rods for the retainment of the fitting.

3.09 BACKFILLING

A. Initial Backfilling

1. Selected fill dirt or sand shall be used for backfill if soil is rocky. If rocky subsoil conditions are encountered, the trenching depth should be 2 inches below normal depth to allow for proper bedding.


© 2026 City of Cottage Grove, Minnesota

2. The initial backfill will always be done by hand and shoveled in evenly along both sides of the pipe and hand tamped into place. Care will be exercised to insure the soil does not bridge and fail to go under the pipe. Next, another layer will be shoveled in and tamped to provide a 4 inch to 6 inch cover over the pipe.

3. The excavated area around the sprinkler risers and sprinkler heads shall be backfilled by hand with select material free of large rocks, roots or foreign debris. If, in the opinion of the Engineer or the Owner, the excavated material is not suitable for use in backfilling, the Contractor shall furnish clean, fine sand for that purpose from an off-site source at no expense to Owner.

B. Final Backfilling

1. After the wiring has been installed and examined by the Owner, the trench shall be carefully backfilled with excavated materials approved for backfilling. The remaining backfill shall contain no lumps or rocks no larger than 3 inches. The top 6 inches of backfill shall be good topsoil, acceptable to the Owner and shall be free of lumps, rocks, subsoil, and trash.

2. The trenches will be accepted as completed when they are left in a condition to receive sod or seed without further grading.

3. Trench settlements that occur before or during the correction period shall be repaired in a manner acceptable to the Owner at the Contractor's expense.

4. The Contractor shall remove and dispose of any excess excavated material, rocks, debris continuously as the construction areas are backfilled so as to cause the least possible disruption to the existing turf.

3.10 POP UP SPRINKLERS

A. Sprinklers shall be set plumb and level with the turf at the locations called for on the drawings. Elevation of the sprinkler heads is critical and the contractor shall exercise care to set them exactly on grade.

B. All threaded fittings shall be OCV screwed malleable, mild iron. An appropriate joint compound shall be used.

C. After all new sprinkler piping, risers and sprinkler heads are in place and connected, and all necessary division work has been completed, all control valves should be opened and a full head of water used to flush out the system. After the system is thoroughly flushed, the system will be tested for operation in accordance with design requirements under normal operating pressure.

3.11 CONTROL CABINET

A. Control cabinet shall be located no further than 15 feet from source of power.

B. Cabinet base placement consistent with section 32 13 14 PART 3.

C. Construct the mounting bracket assembly for the control cabinet using 5/8 inch bolts anchored inside the control cabinet.

3.12 IRRIGATION SYSTEM CONTROLLERS

A. Central Controller:

1. The central controller will be installed at location as indicated in the Drawings.


© 2026 City of Cottage Grove, Minnesota

2. Power supply for central controller and wiring from the source of power to the controller and pumps, if required, shall be included under this Contract.

3. The controller shall be installed in strict conformance with the manufacturers' recommendations and under the supervision of the supplier.

3.13 LIGHTNING ARRESTERS

A. Each Controller shall include an Intermatic 117 VAC surge arrester Model number AG2401. This device shall be installed on the primary power supply and wired according to manufacturer's recommendations. Each Satellite or cluster of Satellites shall have a ground rod, 5/8 inch diameter by 8 feet long copper clad, attached to the grounding lug inside of the pedestal, using an 8 gauge bare copper wire or larger.

3.14 TESTING

A. Where possible, new piping shall be subjected to a hydrostatic pressure test maintaining for at least one hour at a pressure of at least 120 psi.

B. Cracked or defective pipe or fittings disclosed in the test shall be replaced by the Contractor with sound material and the test repeated until the results are satisfactory with the Owner and show no leakage or loss of pressure.

3.15 SPRINKLER LOCATIONS

A. It shall be the Contractor's responsibility to establish the location of all sprinkler heads on all areas indicated on the plans in order to assure proper coverage of all areas.

3.16 WARRANTY

A. Upon completion of irrigation system installation and training, and initial acceptance of Engineer, Contractor shall warranty all materials and workmanship for the period of One Year and shall include one complete operating season from Start-up to shut down. Any defects in materials, needed repairs, adjustments and required maintenance will be responsibility of Contractor at no additional cost to the Owner.

**END OF SECTION**


© 2026 City of Cottage Grove, Minnesota

# SECTION 32 92 00

# TURF AND GRASSES

## PART 1 GENERAL

1.01 SUMMARY

A. Section Includes:
   1. Restoration of construction area by installation of topsoil, topsoil/compost mixture, seed, sod, soil amendments, mulch, and erosion control.

B. Related Sections:
   1. Section 01 33 00 - Submittal Procedures.
   2. Section 01 57 13 - Temporary Erosion and Sediment Control.

1.02 PRICE AND PAYMENT PROCEDURES

A. Measurement and Payment:
   1. Seeding: Measurement per pound bulk weight, according to type of seed mixture, based on seed tickets provided for specified seed mixture. Payment will include soil amendments, furnishing and installing seed, preparation of surface, establishment, and all incidental items associated with the work.
   2. Sodding: Measurement per square yard, including soil amendments, furnishing and installing sod, preparation of surface, establishment, and all incidental items associated with the work.
   3. Mulch Material: Measurement per acre, according to type, complete in place as specified. Payment will include preparation of seedbed, fertilizer, furnishing and installing mulch including disk anchoring, and all correlated activity.
   4. Rolled Erosion Prevention: Measurement per square yard, according to the type of blanket installed. Payment will include all costs related to furnishing and placing fertilizer, blanket, and all correlated activity.
   5. Hydraulic Matrix:
      a. Measurement per acre, according to the type hydraulic matrix used. Payment will include all costs related to furnishing and placing fertilizer, hydraulic matrix, and all correlated activity.
      b. Measurement per square yard, according to the type hydraulic matrix used. Payment will include all costs related to furnishing and placing fertilizer, hydraulic matrix, and all correlated activity.
   6. Topsoil Borrow: Measurement per cubic yard (loose volume) of material hauled to the Site. Payment will include all costs related to furnishing the topsoil:
      a. All costs related to placing, shaping, and compacting the topsoil at locations shown on the Drawings or as directed by the Engineer shall be incidental to the Boulevard Grading Bid Item. Where boulevard grading is not required, all costs are considered incidental to the various Seed or Sod Bid Items.
   7. Topsoil/Compost Mixture: Measurement per cubic yard (loose volume) of material hauled to and placed on the Site. Payment will include all costs related to furnishing the topsoil, compost, thoroughly mixing the compost with topsoil, and placing the mixture:


© 2026 City of Cottage Grove, Minnesota

a. All costs related to placing, shaping, and compacting the topsoil/compost mixture at locations shown on the Drawings or as directed by the Engineer shall be incidental to the Boulevard Grading Bid Item. Where boulevard grading is not required, all costs are considered incidental to the various Seeding, Sodding, or Planting Bid Items.

8. Emergency Overflow Swale Grading and Restoration, Including Seed and Erosion Control Blanket: Payment per square yard. This shall be considered full compensation for all labor, equipment, and materials associated with the work as specified, including the seed and erosion control blanket:
   a. No separate measurement and payment for seed and erosion control blanket will be made for areas paid for as Emergency Overflow Swale.
9. Application of Water for Turf Establishment: Measurement per each 1,000 gallons (MG) of water applied to restored areas. Payment at the Unit Price shall be considered payment in full for all labor, equipment, water, and material necessary to complete the watering as directed:
   a. Compensation will be made for all watering activity during the initial 45 day maintenance period for seed.
   b. Compensation for watering will be made for all watering activity during and following the 30 day maintenance period for sod.
10. Furnishing and installation of items to secure required restoration materials, including staples for erosion control blanket, shall be considered included in the Bid Item for that particular material. No separate measurement or payment will be made for such items.
11. All costs related to sweeping and cleaning any pavement, driveways, trails, sidewalks, etc. that are impacted by restoration activities shall be considered incidental to the restoration Bid Items. No payment will be made under the Street Sweeper With Operator and Skidsteer (Bobcat) With Operator Bid Items for this work.
12. Measurement of restored areas shall be on the area actually covered. No additional compensation will be made for overlapping of restoration materials, such as erosion control blanket.
13. Payment for Bid Items included within this section will made per MnDOT Spec. 2575.5.I. Partial payment of 50-percent of the contract unit items, with the remaining partial payment after proper maintenance and acceptance of the vegetative cover.
14. All other Work and costs of this Section shall be incidental to the Project and included in the Total Base Bid.

## 1.03 REFERENCES

A. Minnesota Department of Transportation “Standard Specifications for Construction”, 2025 Edition (MnDOT Spec.):
   1. 2575 - Establishing Vegetation and Controlling Erosion.
   2. 2574 - Soil Preparation.
   3. 3876 - Seed.
   4. 3877 - Topsoil Material.
   5. 3878 - Sod.
   6. 3881 - Fertilizer.
   7. 3882 - Mulch Material.
   8. 3884 - Hydraulic Erosion Control Products.
   9. 3885 - Rolled Erosion Prevention Products.
   10. 3890 - Compost.


© 2026 City of Cottage Grove, Minnesota

B. Minnesota Department of Transportation Seeding Manual 2024 (MnDOT Seeding Manual).

1.04 SUBMITTALS

A. Provide the following submittals consistent with Section 01 33 00:
   1. Seed:
      a. Provide source and invoice for seed to be used for this Project.
      b. Producer's certificate of compliance – Written documentation verifying compliance of mixture of seed furnished. Include percentage of various seed species, year of production, germination rate, seed bag tags, and weed seed content. Submit to the Engineer at least 5 days prior to delivery.
      c. Species within native seed mixes species shall have their origin documented by the Minnesota Crop Improvement Association (MCIA) to certify that the product is a local ecotype plant.
      d. Provide Engineer with seed bag tags used for identification purposes.
   2. Topsoil per MnDOT Spec 3877.3.
   3. Sod certification per MnDOT Spec 3878.2.
   4. Compost material per MnDOT Spec 3890.3.

1.05 PLANT ESTABLISHMENT PERIOD

A. The Establishment Period for plants shall begin for immediately after installation, with the approval of the Engineer, and continue until the date that the Engineer performs a final inspection:
   1. The establishment period for sod is 30 days.
   2. The establishment period for seeded areas is 45 days.
   3. The germination period and initial growth for seeded areas is 14 days.

1.06 SEQUENCING AND SCHEDULING

A. Provide submittals prior to preconstruction meeting.

B. Notify the Engineer 30 days prior to placement topsoil/compost mixture to allow for inspection, sampling, and testing if necessary.

C. Notify the Engineer at least 3 days in advance of hauling topsoil borrow on Site so the Engineer may review grades prior to placement.

D. Begin final restoration within 7 calendar days of the bituminous initial lift paving or interim bituminous course paving and demonstrate continuous progress until completed, or as modified in Milestones per Section 00 52 10, Paragraph 4.02.

E. Roadway Rehabilitation projects, begin final restoration within 5 calendar days of the bituminous initial lift paving and demonstrate continuous progress until completed, or as modified in Milestones per Section 00 52 10, Paragraph 4.02.


© 2026 City of Cottage Grove, Minnesota

## PART 2 PRODUCTS

2.01 TOPSOIL: Topsoil Borrow Conforming to MnDOT Spec. 3877.2.B, Loam Topsoil Borrow, except as modified herein:

A. Loam Topsoil Borrow must be supplied from an off-site source tested in accordance with Paragraph 3.13.A., meeting the requirement of 100% of the material passing the ¾ inch sieve.

B. No existing on-site topsoil is to be used, unless approved by City Engineer.

2.02 FERTILIZER: Conform to MnDOT Spec. 3881.2.B.3, TYPE 3.

A. Provide plant fertilizer that is commercial grade and uniform in composition and conforms to applicable state and federal regulations.

B. Fertilizer shall contain a minimum percentage by weight 10-10-10 (NKP).

2.03 SOD: Conform to MnDOT Spec. 3878.2.C, Mineral Sod.

2.04 SEED: Conform to MnDOT 2024 Seeding Manual:

A. Lawns: MnDOT Mixture – Residential Turfgrass (RT).

B. General Roadside: MnDOT Mixture – Southern Boulevard (SB).

C. Temporary Spring Cover: MnDOT Mixture – Oats (O).

D. Temporary Fall Cover: MnDOT Mixture – Winter Wheat (WW).

E. Temporary Mix: MnDOT Mixture – Oats and Peas (OP).

F. Pond Edge Mix: MnDOT Mixture – Wet Ditch (WD).

2.05 MULCH: Conform to MnDOT Spec 3882:

A. Type 1, clean grain straw unless identified otherwise.

B. Hydraulic erosion control products may be used in lieu of mulch with the approval of the Engineer.

2.06 HYDRAULIC EROSION CONTROL PRODUCTS (HECPS): Conform to MnDOT Spec 3884

A. Hydraulic Matrix:
   1. Mulch: Conform to MnDOT Spec. 3884.2.B.2
   2. Bonded Fiber Matrix (BFM): Conform to MnDOT Spec 3884.2.B.4

2.07 ROLLED EROSION PREVENTION PRODUCTS: Conform to MnDOT Spec 3885

A. Erosion Control Blanket, Category 20, Straw unless identified otherwise in the Drawings.


© 2026 City of Cottage Grove, Minnesota

B. Turf Reinforcement Mat, Category 70 unless identified otherwise in the Drawings.

2.08 COMPOST: Conform to MnDOT Spec. 3890.2.B, Grade 2 Compost.

**PART 3 EXECUTION**

3.01 EXAMINATION

A. Review restoration areas with the Engineer. Determine locations for seed or sod. Schedule for restoration of areas may be revised to fit field conditions:
   1. No compensation will be allowed for areas considered to be needlessly restored if restoration activities are performed without the authorization of the Engineer.

B. Finish grades are to be inspected and approved by the Engineer prior to start of restoration.

3.02 DELIVERY AND STORAGE

A. Delivery:
   1. Notify the Engineer of the delivery schedule in advance so the plant material may be inspected upon arrival at the Site. Remove unacceptable plant material from the Site immediately.
   2. Deliver fertilizer and lime to the Site in the original, unopened containers bearing the manufacturer's guaranteed chemical analysis, name, trade name or trademark, and in conformance to state and federal law. In lieu of containers, fertilizer and lime may be furnished in bulk and a certificate indicating the above information shall accompany each delivery.
   3. During Delivery: Protect sod from drying out and seed from contamination.

B. Storage:
   1. Sprinkle sod with water and cover with moist burlap, straw, or other approved covering, and protect from exposure to wind and direct sunlight. Covering should permit air circulation to alleviate heat development.
   2. Keep seed, lime, and fertilizer in dry storage away from contaminants.

3.03 PREPARATION

A. General: Conform to MnDOT Spec. 2575.3.A.

B. Soil Preparation: Conform to MnDOT Spec. 2574.

C. Fertilizers and Conditioners: Conform to MnDOT Spec. 3881 and 3879:
   1. Apply fertilizer at a rate of 400 lbs. per acre (9.2 lbs./1,000 sq. ft.).
   2. Where soil pH is lower than 5.5, apply lime at 3 tons per acre (140 lbs./1,000 sq. ft.).

3.04 TOPSOIL/COMPOST MIX

A. Subgrade to be inspected and approved by Engineer prior to placement of topsoil/compost mix.


© 2026 City of Cottage Grove, Minnesota

B. Construct mix by thoroughly by blending topsoil and compost at 70-percent/30-percent ratio:
   1. Off site blending of topsoil and compost is required.
   2. The blended materials shall be screened to 1 inch size.

C. 6 inch minimum compacted thickness.

3.05 SOWING SEED

A. Seeding Preparation and Application: Conform to MnDOT Spec. 2574 and 2575.3.B for the mixes specified.

B. Prior to placing hydraulic erosion control products (hydraulic matrix):
   1. Install seed prior to hydraulic matrix installation using a “brillian type” seeder to evenly spread seed over the entire Site.
   2. The Site shall be harrowed or raked parallel to the slope contours following seeding.
   3. The Site shall be packed using a culti-packer or equivalent, following harrowing.
   4. Application of fertilizer.

3.06 PLACING SOD

A. Conform to MnDOT Spec. 2575.3.F.

B. Place, shape, and compact 6 inches of topsoil or 6 inches of topsoil/compost mix, as appropriate, prior to placement of sod.

3.07 MULCH: Conform to Section 01 57 13.

3.08 ROLLED EROSION PREVENTION PRODUCTS

A. Erosion control blanket shall be installed immediately following seeding in accordance with MnDOT Spec. 2575.3.G.2, and as modified below.

B. Raking or harrowing of soil/seed shall be done before installation of erosion control blanket.

C. Install blanket parallel to the direction of flow in all cases.

D. If permanent seeding is not available at the time of blanket installation, this material will have to be removed, re-seeded, and installed again as a permanent erosion control measure. If permanent seeding is available at the time of initial installation, a 1-time proper installation is acceptable.

3.09 HYDRAULIC EROSON CONTROL PRODUCTS

A. Hydraulic Matrix:
   1. Apply in conformance with MnDOT Spec. 2575.3.E.
   2. Raking or harrowing of soil/seed and slope (cat) tracking shall be done before installation of hydraulic matrix.
   3. Apply hydraulic matrix in at least 2 opposing directions so that a shadowing effect leaving the back side of a soil clod unprotected is minimized.


© 2026 City of Cottage Grove, Minnesota

4. Application Rate:
    a. Slopes steeper than 1:4: Apply at a rate of 2,800 lbs per acre. Two applications may be necessary.
    b. All other slopes: apply at a rate of 2,100 lbs per acre.
5. Apply hydraulic matrix immediately following seeding.

## 3.10 EMERGENCY OVERFLOW SWALE

A. Construct emergency overflow swales at locations shown on the Drawings.

B. Grade the overflows as staked and directed.

C. Upon approval of the grading, place topsoil, seed, and erosion control blanket.

D. Re-establish the emergency overflow swale as part of the final Site clean-up and restoration.

## 3.11 SWEEPING AND CLEANUP

A. Immediately following the topsoil, seed and sod placement, sweep and clean all pavement, driveways, trails and sidewalks impacted these operations:
    1. Final clean up of the bituminous surface with the use of a power pickup broom and front end loader/skidsteer.
    2. Street sweeping operations must include the application of water to effectively remove fine materials from pavement areas. The appropriate amount of water shall be applied, eliminating dust as part of the sweeping operations.
    3. Respond within 24 hours of a request by the Engineer, with the necessary street sweeping equipment to perform the cleanup operations.

## 3.12 MAINTENANCE:

A. Conform to MnDOT Spec. 2575.3.K, or as modified herein:
    1. Restored areas that have been satisfactorily completed and are disturbed by additional construction activity required by the timing and sequencing of the Work shall be restored over to the same requirements of the original work.
    2. Any sod that does not show definite growth and establishment 30 days after installation shall be replaced and established at the proper season by the Contractor at his/her expense.
    3. Seed maintenance shall be done in conformance with the MnDOT Seeding Manual – With the following exception: Water the seeded areas to ensure establishment:
        a. Compensation will be made for all watering activity during the initial 45 day maintenance period for seed, per Bid Item for Application of Water for Turf Establishment.
        b. At the end of the 45 day maintenance period, Engineer will make an inspection of all restored areas. Engineer may direct Contractor to continue watering of any area if deemed necessary. Frequency of watering shall be as directed and modified by the Engineer. Duration of watering shall continue at the directed frequency until Contractor is directed by Engineer to cease.
    4. Weed control shall be the responsibility of the contractor during the initial 45 day establishment period. Weed control may include spot spraying and mowing to control weed growth.


© 2026 City of Cottage Grove, Minnesota

5. Seeded areas that do not show seed germination 14 days after installation shall be replaced by the Contractor at his/her expense and watering will be required every day at a minimum.
6. Seeded areas that do not show definite growth and establishment 45 days after installation shall be replaced and established by the Contractor at his/her expense.
7. Watering of sod areas shall be done for a minimum period of 30 days from installation sufficient to ensure establishment of permanent vegetation:
    a. At the end of the 30 day maintenance period, Engineer will make an inspection of all restored areas. Engineer may direct Contractor to continue watering of any area if deemed necessary. Frequency of watering shall be as directed and modified by the Engineer. Duration of watering shall continue at the directed frequency until Contractor is directed by Engineer to cease.

## 3.13 FIELD QUALITY CONTROL

A. Topsoil Borrow:
    1. Source testing:
        a. The Contractor shall split and test a sample from prospective source with the Owner prior to the preconstruction meeting.
        b. The Contractor's QC sample and Owner's QA sample shall meet the requirements of Paragraph 2.01.A. If the requirements are not met the Contractor must provide material from another source.
    2. Placement testing:
        a. The Contractor shall split and test a sample onsite at the time of placement with the Owner.
        b. The Contractor's QC sample and Owner's QA sample shall meet the requirements of Paragraph 2.01.A. If the requirements are not met the material will be rejected. The Contractor is responsible for all costs associated with additional testing due to failing materials.

## 3.14 INSPECTION AND ACCEPTANCE

A. Seeding and turf work will be inspected for acceptance in parts agreeable to the Engineer, provided Work offered for inspection is complete, including maintenance for the portion in question.

B. Seeded areas will be inspected for germination and growth 14 days after placement. Any restored areas that do not show definite germination and growth, as determined by the Engineer, shall be replaced and re-established by the Contractor at his/her expense.

C. At the conclusion of the establishment period(s), a final inspection of planting(s) will be made to determine the conditions of areas specified for landscaping.

D. When inspected landscape work does not comply with requirements, replace rejected Work and continue specified maintenance until re-inspected by Engineer and found to be acceptable. Remove rejected materials from the Site.

E. Seed evaluation at the conclusion of the establishment period related to acceptance, shall be based on at least 1 species per square foot with 90-percent of seeding per square foot being of the permanent seed species within the applied mix.


© 2026 City of Cottage Grove, Minnesota

F. Boulevard settlements that occur during the correction period and are greater than 1 inch as measured by a 10 foot straight edge will be repaired in a manner acceptable to the Owner at the Contractor's expense.

**END OF SECTION**


© 2026 City of Cottage Grove, Minnesota

This Page Left Blank Intentionally

# SECTION 32 93 05

# PLANTING MATERIALS, INSTALLATION, AND ESTABLISHMENT

## PART 1 GENERAL

1.01 SUMMARY

A. Section Includes:
1. This section covers the furnishing of all labor, materials, tools, equipment and performance of all work and services necessary or incidental to plant installation as indicated on the drawings or as specified herein.

1.02 PRICE AND PAYMENT PROCEDURES:

A. Measurement and Payment:
1. Measurement and compensation for the following items shall be paid according to the referenced specification or as modified below:
   a. Deciduous Trees or Coniferous Trees: Measurement per each by tree species, variety, and caliper and/or size range furnished and planted in accordance with the Drawings. Payment shall include:
      1) Excavation for tree planting hole.
      2) Furnishing and Planting of tree.
      3) Furnishing and installing accessories.
      4) Maintenance and watering, including furnishing and installing slow release watering bag.
   b. Shrubs: Measurement per each by species, variety, and size range furnished and planted in accordance with the Drawings. Payment shall include:
      1) Excavation for planting hole.
      2) Furnishing and Planting of shrub.
      3) Furnishing and placing mulch.
   c. Perennials: Measurement per each by species, variety, and size range furnished and planted in accordance with the Drawings. Payment shall include:
      1) Excavation for planting hole.
      2) Furnishing and Planting of perennial.
      3) Furnishing and placing mulch.
   d. Transplant Tree: Measurement per each tree, regardless of size or type. Payment will include salvaging the tree, temporarily storing the tree during construction, and re-planting the tree as specified in the same general location and as directed by the Engineer.
2. All other work and costs of this Section shall be incidental to the Project and included in the Total Base Bid.

1.03 REFERENCES

A. Minnesota Department of Transportation “Standard Specifications for Construction”, 2025 (MnDOT Spec.):
1. 2571 - Plant Installation and Establishment.
2. 3861 - Planting Materials.


© 2026 City of Cottage Grove, Minnesota

3. 3881 - Fertilizer.
4. 3882 - Mulch Material.

B. American National Standards Institute (ANSI)
1. ANSI Z60.1 – American Standard for Nursery Stock.

## PART 2 PRODUCTS

2.01 MATERIALS

A. Nursery Stock:
1. Plant materials shall conform to the requirements of MnDOT Spec. 3861 and ANZ60.1.
2. No substitutions will be accepted without written approval from the Owner or Engineer.
3. Treated burlap will be allowed on soil balls, as an exception to MnDOT Spec. 2571.3.F, and 3861.2.F, if vertical slits are cut through the burlap. The vertical slits shall be made at 6 inch intervals horizontally around the circumference of the root ball and shall be made from the top of the root ball extending downward and shall be done in a manner which does not damage the root system.

B. Fertilizer: Conform to MnDOT Spec. 3881.2.B.3 - Type 3 - Slow-Release Fertilizer.

C. Mulch: Conform to MnDOT Spec. 3882.2.E, and as modified herein:
1. Shredded hardwood mulch shall be provided free of dirt, ashes, sawdust, rocks, leaves, roots, black bark mold or any other debris.

D. Soil moisture Amendment Pellets: Soil Moist Professional Granular by JRM Chemical, Inc. or approved equal.

E. Slow Release Watering Bag: Treegator® Original or approved equal.

## PART 3 EXECUTION

3.01 CONSTRUCTION REQUIREMENTS

A. Planting operations shall not be started, nor shall any planting stock be delivered to the Project site, until all other work has been completed in the area of the proposed planting site as determined by the Engineer.

B. Notify the Engineer orally or in writing, as designated by the Engineer, at least 24 hours prior to the start of any planting operations during this Contract, including layout staking, clearing, weed spraying, soil preparation, watering, mulching, plant protection, weeding and clean-up.

C. All planting operations shall be performed during normal working hours and under conditions suitable for such work, as determined by the Engineer, unless otherwise authorized by the Engineer.

D. The Engineer and City Parks Department will field stake the location of trees to be planted. All other plantings shall be staked by the contractor then reviewed and accepted by the City prior to installation.


© 2026 City of Cottage Grove, Minnesota

E. Trees delivered with the root flare more than 3 inches below the ball will be rejected.

F. Set tree plumb and maintain throughout the establishment period. Place root ball on firm unexcavated or tamped soil. Tamp soil around base of the root ball with foot pressure so that root ball does not shift. Remove all flagging and labels.

G. Prune branches to a minimum 5 foot to allow for a clear sight distance. Do not heavily prune the tree at planting. Prune only crossover limbs, co-dominant leaders and broken branches. Some interior twigs and lateral branches maybe pruned. Do not remove the terminal buds that extends to the edge of the crown.

H. During the spring planting season, any evergreen plant delivered with new growth in advance stage of candling out will be rejected. Evergreen trees not fully branched from the bottom to top will be rejected and those terminal leaders exceeding 12 inches in length will be rejected.

I. Trees planted within heavy soils, extend the excavation and backfill soil around the root ball to a point 6 inches below the bottom of the root ball to ensure adequate drainage.

J. Establish final grade prior to planting trees.

K. Balled and Burlapped Tree Planting:
   1. Construct planting hole to be 3 times as wide as the diameter of the root ball.
   2. Construct planting hole to be deep enough so the root flare is 1-2 inches above finished grade.
   3. Scarify the sides of the planting hole to avoid glazing.
   4. Remove any excess soil to expose the root flare after placing the tree in the planting hole and adjust the depth as necessary to keep root flare 1-2 inches above finished grade.
   5. Remove a minimum 2/3 of the wire basket and as much burlap as possible from the root ball.
   6. Remove all twine or rope and plastic wrap from the root ball.
   7. Backfill with soil from the original planting hole, tamping every few inches while backfilling. Keep the root flare exposed.
   8. Taper the outside edges of the backfill slightly below the original grade to help retain water.

L. Container Grown Trees:
   1. Construct planting hole to be 3 times as wide as the diameter of the root ball.
   2. Construct planting hole to be deep enough so the root flare is 1-2 inches above finished grade.
   3. Scarify the sides of the planting hole to avoid glazing.
   4. Remove the container from the root ball by slicing the sides of the container. Use fingers or small tools to pull roots out of the outer layer of the potting soil, then cut or pull apart any circling roots.
   5. If the tree is heavily pot bound, use the box cut method to reduce the chance of girdling roots. Using a pruning saw, cut 1-3 inches off the roots on 4 sides, leaving a square or box to be planted.
   6. Remove any excess soil to expose the root flare after placing the tree in the planting hole and adjust the depth as necessary to keep root flare 1-2 inches above finished grade.
   7. Backfill with soil from the original planting hole, tamping every few inches while backfilling. Keep the root flare exposed.
   8. Taper the outside edges of the backfill slightly below the original grade to help retain water.


© 2026 City of Cottage Grove, Minnesota

M. Mulching:
   1. Place a layer of mulch 2-4 inches thick extending 1-2 inches past the outside of the planting hole.
   2. Do not mulch in contact with tree trunk. Leave 2-3 inches of space between the root flare and mulch.
   3. Place mulch within 48 hours of second watering.
   4. The outside boundary of the mulch ring should be raised slightly to help retain water.
   5. Staked only as needed and directed by the Engineer.
   6. Stake when the root ball moves easily while the top of the tree is being moved back and forth or when the top cannot support itself and is bending.
   7. Materials directly connecting to the tree should have a broad smooth surface.
   8. Place stakes 6 inches inside the mulched area directly across from each other.
   9. Wire or rope used to connect the stake to the tree should be loose enough to allow the tree to move slightly in all directions.
   10. Stake the tree as low as possible, but not higher the 2/3 the height of the tree.

N. Soil Moisture Amendment:
   1. Apply per manufactures recommendations.
   2. This item shall be considered incidental to the respective planting.

O. Shrub and Perennial Planting:
   1. Excavate planting hole to a width of 2 times the container size.
   2. Excavate planting hole to the depth of the container.
   3. Furnish and install specified plant.
   4. If plant is shipped in a container remove the container from the root ball by slicing the sides of the container. Use fingers or small tools to pull roots out of the outer layer of the potting soil, then cut or pull apart any circling roots.
   5. Set root ball flush with finish grade.
   6. Backfill with soil from the original planting hole. Respread any excess excavated material.
   7. Place mulch 3 inches thick, unless otherwise specified on the drawings. Do not place mulch in contact with the plant. Place mulch within 48 hours of second watering.
   8. Do not heavily prune at planting. Prune only broken or dead branches, retaining natural form.

P. The Plant Establishment Period shall be 2 years, and shall begin upon written approval of the work by the Engineer. Replacement of dead or defective trees or incidental materials shall be required immediately or as soon as is practicable within an appropriate period of time as ordered by the Owner or Engineer. It is anticipated that the plant establishment will be included in the specified warranty period and that no retainage will be held throughout the plant establishment period unless the Owner or Engineer determine that the materials or procedures warrant such a retainage.

Q. Watering during the Plant Establishment Period shall consist of maintaining adequate (but not excessive) soil moisture at all times. Each tree planted shall have a slow release watering bag furnished and installed per manufacturer's recommendation in addition to the watering requirements. It is recommended that after the initial thorough "watering in", every tree should receive a thorough watering, as necessary, at weekly intervals, on the average, throughout the growing season (approximately May 1 thru October 1). Avoid over watering all trees. **GENERAL** water guidelines for the average condition are as follows:


© 2026 City of Cottage Grove, Minnesota

| **Plant Type** | **Average Amount of Water Per Application** |
|---|---|
| Machine Transplanted Trees (3" caliper plus) | 50 to 100 Gallons |
| Balled & Burlapped Trees | 20 Gallons ± |
| Bare Root Trees | 15 Gallons ± |
| Balled & Burlapped Shrubs | 10 Gallons ± |
| Bare Root or Container Shrubs | 7 Gallons ± |

3.02 DISPOSAL OF EXCESS AND WASTE MATERIALS

A. Remove excess and waste materials, including unacceptable excavated material, trash, and debris from the job site.

**END OF SECTION**


© 2026 City of Cottage Grove, Minnesota

This Page Left Blank Intentionally

# SECTION 33 01 38

# CURED-IN-PLACE PIPE (CIPP) GRAVITY

## PART 1 GENERAL

### 1.01 SUMMARY

A. Section Includes:
   1. This section covers the furnishing of all labor, materials, tools, equipment and performances of all work and services necessary or incidental to the installation of a resin-impregnated flexible liner which is inserted into the original conduit by use of a hydrostatic head. Methods that are pulled in and inflated rather than inverted will be considered, providing they meet the other provisions of this specification. When cured, the finished pipe (CIPP) will be continuous and tight fitting.

B. Related Sections:
   1. Section 01 33 00 - Submittal Procedures.

### 1.02 PRICE AND PAYMENT PROCEDURES

A. Measurement and Payment:
   1. Inline CIPP: Measurement per linear foot of liner installed, according to type and diameter of pipe. Payment shall be compensation in full for all equipment, materials, and labor required to complete the CIPP installation.
   2. CIPP Short Liner: Measurement per each according to type of pipe, diameter, and length of short liner installed. Payment shall be compensation in full for all equipment, materials, and labor required to complete the CIPP short liner installation.
   3. Lateral Reinstatement: Measurement per each, regardless of the size of the wye. Payment shall be compensation in full for all labor, materials, and equipment required to determine which are active, and complete the lateral reinstatements of all lateral lines conveying sewage in accordance with these specifications.
   4. Trim Protruding Tap: Measurement per each. Payment shall be compensation in full for all labor, equipment and materials required to determine which taps are to be trimmed and subsequent trimming, regardless of tap diameter.
   5. Lateral Service T-Liner: Measurement per each. Payment will constitute full compensation for all work and costs to furnish and install lateral service T-liner complete in place, including line cleaning and clearing before installation, bypass pumping, dewatering, sealing the liner at the ends, testing, and pre and post television inspection.
   6. No alteration of Bid Unit Prices will be allowed due to modification of Project quantity by Engineer and Owner based on updated information from pre-construction television inspection.
   7. All other Work and costs of this Section shall be incidental to the Project and included in the Total Base Bid.

B. The furnishing and installing of specific items and /or the performance of work under certain circumstances shall not be individually paid in the absence of a specific bid item for the work. The costs shall be included in the unit price bid for the CIPP, as indicated. Such items of work include, but are not limited to:


© 2026 City of Cottage Grove, Minnesota

1. Coordination with City to coordinate access to the sanitary sewer systems.
2. Securing and withdrawing from a water source.
3. Furnishing, installing and maintaining traffic control devices where necessary not already provided for by bid items.
4. Pre-installation and post-installation cleaning and televising.
5. Removal and disposal of internal debris from the sewer mainline and services prior to installation.
6. Bypass pumping unless otherwise specified and included in the bid form.
7. Providing all required notifications of restricted sewer service periods to the Owner and residents affected by the work as well as coordination of resident relocations and reimbursements, if applicable.
8. Installation of pipe pre-liners or grouting if required to install CIPP in areas of excess infiltration.
9. Dye testing as required to determine active laterals (where needed).
10. Installation of hydrophilic end seals at the ends of the liner in each manhole.
11. Removal of liner in manholes if pulling/inverting through manholes (unless manhole is being abandoned).
12. Excavation and restoration required to reinstate sewer services if the Contractor is unable to reinstate services via trenchless methods.
13. General project related restoration where not already provided by bid items.

1.03 REFERENCES

A. This specification references below are made a part hereof by such reference and shall be the latest edition and revision thereof. In case of conflicting requirements between this specification and the ASTM referenced sections, this specification will govern.
   1. ASTM F2019 Standard Practice for Rehabilitation of Existing Pipelines and Conduits by the Pulled in Place Installation of Glass Reinforced Plastics (GRP) Cured-In-Place Pipe (CIPP)
   2. ASTM F1216 Standard Practice for Rehabilitation of Existing Pipelines and Conduits by the Inversion and Curing of a Resin-Impregnated Tube.
   3. ASTM F1743 Standard Practice for Rehabilitation of Existing Pipelines and Conduits by the Pull in and inflate and Curing of a Resin-Impregnated Tube.
   4. ASTM F2561 Standard Practice for Rehabilitation of a Sewer Service Lateral and its Connection to the Main Using a One-Piece Main and Lateral Cured-in-Place Liner.
   5. ASTM D543 Test Method for Resistance of Plastics to Chemical Reagents
   6. ASTM D578 Standard Specification Glass Fiber Strands
   7. ASTM D638 Standard Test Method for Tensile Properties of Plastics.
   8. ASTM D790 Standard Test Methods for Flexural Properties of Unreinforced and Reinforced Plastics and Electrical Insulating Materials.
   9. ASTM D2122 Standard 1 Test Method for Determining Dimensions of Thermoplastic Pipe and Fittings
   10. ASTM D2990 Standard Test Methods for Tensile, Compressive, and Flexural Creep and Creep-Rupture of Plastics
   11. ASTM D3567 Standard Practice for Determining Dimensions of ‘‘Fiberglass’’ (Glass-Fiber Reinforced Thermosetting Resin) Pipe and Fittings
   12. ASTM D5813 Standard Specification for Cured-in Place Thermosetting Resin Sewer Pipe


© 2026 City of Cottage Grove, Minnesota

B. Unless noted otherwise, the provisions in this section are in addition to the referenced specification.

1.04 SUBMITTALS

A. Submit the following items consistent with Section 01 33 00:
   1. Inline CIPP and CIPP Short Liner:
      a. The Contractor shall submit, prior to the installation or use of any lining materials or equipment, certified test results from the manufacturers which indicate that all materials conform to the applicable requirements.
      b. A copy of the license or certificate verifying the manufacturer's or licensor's approval of the INSTALLER.
      c. Chemical resistance submittals --- The Contractor shall submit test results of the resin proposed that meet the chemical resistance requirements of ASTM F2019, Section 5.2.6. The chemical resistance tests will be completed in accordance with Test Method D543.
      d. CIPP Field Samples ---Field sampling procedure shall be in accordance with ASTM 2019 and in accordance with ASTM D5813.
      e. MSDS Sheets --- The Contractor shall submit Material Safety Data Sheets for all resins, and other additives such as accelerants, colorants, and lubricants utilized in the pipe liner/lining process.
      f. Manufacturer Protocols - The Contractor shall submit manufacturer information that describes the materials, curing speeds/schedule, curing installation processes, installation pressures, temperature limitations, and recommended post curing documentation.
      g. Residential Informational Handout - The Contractor shall submit an informational hand out that describes the materials, processes, installation, pressures, temperature limitations, and odors associated with the lining process that shall be provided at the request of concerned residents.
      h. Proposed plan for temporary conveyance of sewer flows and bypass monitoring.
      i. Proposed construction schedule.
      j. Liner pipe thickness design for each pipe segment. No liner will be approved for installation until liner thickness calculations have been submitted and reviewed for conformance with the specification.
      k. Evidence of the INSTALLER's experience including a list of similar projects completed within the previous 2 years.
      l. Description of cure method(s) proposed by the Contractor.
   2. Lateral Service T liner:
      a. Product Data:
         1) Resin:
            a) Long term creep test data confirming the resin system’s 50-year design life in accordance with ASTM D2990.
            b) Chemical Resistance in accordance with ASTM F1216.
            c) Certificate of Compliance in accordance with ASTM F1216.
            d) Material Safety Data Sheets (MSDS).
         2) Liner:
            a) Certificate of Compliance in accordance with ASTM 1216 for inversion tubes.
            b) Certificate of Compliance in accordance with ASTM 1743 for pull in place tubes.


© 2026 City of Cottage Grove, Minnesota

b. CIPP wall thickness design calculations in accordance with ASTM F1216. Design calculations will include applicable designs as follows:
   1) 4- thru 6-inch diameter lateral liner assuming Fully Deteriorated conditions.
   2) Main line pipe liner assuming Partially Deteriorated conditions when the main line pipe is lined.
3. Main line pipe liner assuming Fully Deteriorated conditions when the main line pipe is NOT lined.

B. Televising Log:
1. All televising and construction logs, or copies thereof, shall become the property of the Owner. This includes the videos made at the beginning of the project just prior to the installation of the liner.
2. Televising logs shall be provided in USB drive format.
3. Two copies of all thumb drives shall be submitted.

1.05 QUALITY ASSURANCE

A. Televise completed work:
1. Provide Engineer a minimum 72-hour advance notice prior to televising to allow monitoring of the process.
2. Provide the Engineer with a copy of the TV inspection video in USB drive format.

B. Test samples of the cured material for physical strength before a sample may be taken from the wet out tube, clamped between flat plates, and cured in the down-tube.

**PART 2 PRODUCTS**

2.01 PREQUALIFICATION

A. Only bids for pre-qualified products will be accepted. Bids submitted for products or from Contractors that have not been pre-qualified may be rejected, pending review by the Owner. The Contractor and the proposed method of reconstruction and the product manufacturer's name shall be clearly identified on the bid.

B. Pre-qualified Installers:
1. Insituform Technologies USA, LLC.
   a. 1140 Bunker Lake Boulevard NW, Anoka, MN 55303, Telephone: 651-762-1238
2. (National Liner) Visu-Sewer
   a. 3155 104th NE Lane, Blaine, MN 55449, Telephone: 763-252-0004
3. Veit Companies
   a. 14000 Veit Place Rogers MN 55374, Telephone 763-428-2242
4. Granite Inliner
   a. 16028 Forest Blvd N. PO Box 353, Hugo, MN 55038, Telephone 612-369-1633
5. Michels Pipe Service – A Division of Michaels Corporation
   a. 817 West Main Street, P.O. Box 128, Brownsville, WI 53006, Telephone: 920-583-3132
6. Sak Construction
   a. 864 Hoff Road, O'Fallon, MO 63366, Telephone 626-385-1000
7. SJ Louis Construction
   a. 1351 Broadway St W, Rockville, MN 56369, Telephone 320-253-9291


© 2026 City of Cottage Grove, Minnesota

C. Qualification Process:
   1. Contractors wishing to qualify for this project must submit a copy of the license or certificate verifying the manufacturer's or licensor's approval, and evidence of the INSTALLER's experience including the number, total length, and locations of inversions installed to date using the proposed materials and methods together with the names and phone numbers of facility owners to the Engineer 5 days prior to the opening of bids to allow time for evaluation. The Contractor must have at least five (5) years of active experience installing the CIPP product.
   2. The final decision to accept or reject the applicant lies solely with the Engineer and Owner. All decision will be based upon the long-term best interest of the City.

2.02 MATERIALS

A. Liner - The liner material shall meet the requirements of ASTM F1216 and/or ASTMF2019.

B. Resin - The resin system shall meet the requirements of ASTM F1216 and/or ASTMF2019. Neat resin shall be used for all lining of PVC pipes.

C. Approved T liners:
   1. BLD “Service Connection Seal + Lateral” of BLD Services, LLC
   2. LMK “T-Liner” Main-to-Lateral Lining System

2.03 STRUCTURAL REQUIREMENTS

A. The CIPP shall be designed as per ASTM F1216, Appendix X1. The CIPP design shall assume no bonding to the original pipe wall but a tight, intimate contact is required.

B. The CIPP shall be designed using a Long Term Creep Retention Factor of fifty percent (50%) of the initial design flexural modulus as determine by ASTM D-790 test method. This value shall be used unless the Contractor submits long term test data (ASTM D2990) to substantiate a higher retention factor.

C. The layers of the cured CIPP shall be uniformly bonded. It shall not be possible to separate any two layers with a probe or point of a knife blade so that the layers separate cleanly or the probe or knife blade moves freely between the layers.

D. If separation of the layers occurs during testing of field samples, new samples will be cut from the work. Any reoccurrence may cause rejection of the work.

E. The CIPP shall conform to the following properties:

| | **Standard** | **Min Value** | **Enhanced Value** | **UV Value** |
|---|---|---|---|---|
| Flexural Strength | ASTM - D790 | 4,500 psi | 4,500 psi | 6,500 psi |
| Modulus of Elasticity | ASTM - D790 | 250,000 psi | 400,000 psi | 725,000 psi |


© 2026 City of Cottage Grove, Minnesota

F. The design parameters are:

| | | |
|---|---|---|
| Pipe diameter | 8 | Inches |
| Maximum depth from finished ground to invert | 15 | Feet |
| Minimum depth from finished ground to invert | 8 | Feet |
| Groundwater Depth | 5 feet below surface | Feet |
| Cover density (assumed) | 120 | Lbs/cf |
| Design Safety Factor (1.5 for pipes 36 inches and larger) | 2.0 | Value |
| Ovality | 5% | Percent |
| Enhancement Factor (K) | 7.0 | Value |
| Poisson's Ratio | 0.3 | Value |
| Level of Deterioration | Fully Det | Value |
| Creep Retention Factor | 50% | Value |
| Soil Modulus | 1000 (0-15 feet) | psi |
| Host Pipe Loading | H20 Highway | Value |

G. The required structural CIPP wall thickness shall be based as a minimum, on the physical properties listed above and in accordance with the Design Equations in the appendix of ASTM F1216. The finished/cured liner thickness shall exceed minimum thickness requirements set forth by the equations in the appendix of ASTM F1216.

2.04 TESTING REQUIREMENT

A. Chemical Resistance - The Contractor shall certify that CIPP shall meet the chemical resistance requirements of ASTM F1216, Appendix X2. CIPP samples for testing shall be of liner and resin system similar to that proposed for actual construction. It is required that CIPP samples with and without plastic coating meet these chemical testing requirements.

B. Hydraulic Capacity - The Contractor shall certify that the CIPP shall have a minimum of the full flow capacity of the original pipe before rehabilitation. Calculated capacities may be derived using a commonly accepted roughness coefficient for the existing pipe material taking into consideration its age and condition. The roughness coefficient of the CIPP shall be verified by third party test data.

C. CIPP Field Samples - When requested by the Owner, the Contractor shall submit test results from previous field installations in the USA of the same resin system and liner materials as proposed for the actual installation. These test results must verify that the CIPP physical properties specified in Section 2.3.D. have been achieved in previous field applications. Testing samples for this project shall be made and tested as described in Section 3.4.A.


© 2026 City of Cottage Grove, Minnesota

## PART 3 EXECUTION

3.01 GENERAL

A. The Contractor shall secure his own source of water. The Contractor may contact the Owner to determine whether water is available from the Owner and the associated cost.

B. It shall be the responsibility of the owner to locate and designate all manhole access points open and accessible for the work and provide rights of access to these points. If a street must be closed to traffic because of the orientation of the sewer, the Contractor shall furnish and install all necessary traffic control devices until the street is opened to traffic.

C. Cleaning of Sewer Lines - The Contractor shall remove all internal debris out of the sewer line that will interfere with the installation of CIPP. The Contractor shall secure their own disposal site for all debris removed from the sewers.

D. Bypassing Sewage - The Contractor shall provide for the flow of sewage around the section or sections of pipe designated for lining. The bypass shall be made by plugging the line at an existing upstream manhole and pumping the flow into a downstream manhole or adjacent system. The pump and bypass lines shall be of adequate capacity and size to handle the flow.

E. Inspection of Pipelines - Inspection of pipelines shall be performed by experienced personnel trained in locating breaks, obstacles and service connections by closed circuit television. The interior of the pipeline shall be carefully inspected to determine the location of any conditions that may prevent proper installation of CIPP into the pipelines, and it shall be noted so that these conditions can be corrected.

F. Line Obstructions - It shall be the responsibility of the Contractor to clear the line of obstructions such as solids and roots that will prevent the proper insertion of CIPP. If pre-installation inspection reveals an obstruction such as a protruding service connection, offset joint, or a collapse that will prevent the inversion process, and it cannot be removed by conventional sewer cleaning equipment, the Contractor shall immediately notify the Owner. The Owner may choose to have the Contractor make a point repair excavation to uncover and remove or repair the obstruction. Such excavation shall be considered as a separate pay item.

G. The Contractor shall notify the Owner prior to initiating cleaning and flushing and shall coordinate his operations with the Owner.

H. The Contractor shall determine the length and diameter of the pipe to be lined prior to fabrication of the liner. No additional compensation will be paid for measured diameters, which vary from measure indicated on the plans or bid form.

I. The Contractor shall provide all necessary equipment, jigs, pipe pieces, sandbags, labor, etc. to install CIPP tube through the available access locations provided and shown on the plans. The Contractor shall also cut open, reinstate, and prepare the edges of cut surfaces in a clean and orderly fashion to reopen the pipe within manholes that have been lined through. No additional compensation shall be made for lined through manholes, and such items of work shall be considered incidental to the contract.


© 2026 City of Cottage Grove, Minnesota

3.02 NOTIFICATION

A. Notice required. At least six days before the start of lining, the Contractor shall provide notice, including the approximate schedule of lining, as described below.
   1. Written notice must be given to the adult residents of buildings, and to the owner or administrator of any property directly served by the sewer to be lined.
   2. The notice must be mailed or hand delivered to the owner or administrator of a childcare building, school building, commercial business, and/or industry.
   3. The notice may be put on or under the door of each residence, one notice for each single-family building and one notice for each unit of a multi-unit building.

B. Contents of notice to residents, administrator and Owner. The notice shall specify the days and the hours during which sewer service will be restricted.

C. Reminder Notice. A written, or verbal reminder notice shall be delivered at least 48 hours prior to the actual work.

3.03 CONSTRUCTION REQUIREMENTS

A. CIPP installation shall be in accordance with ASTM F1216, Section 7, or ASTM F2019, Section 6.4 with the following additional requirements:
   1. Resin Impregnation - The quantity of resin used for liner impregnation shall be sufficient to fill the volume of air voids in the liner with additional allowances for polymerization shrinkage and the loss of resin through cracks and irregularities in the original pipe wall. A vacuum impregnation process shall be used. A roller system shall be used to uniformly distribute the resin throughout the liner.
   2. Liner insertion shall be performed in accordance with manufacturer's recommendations and in such a way to fully extend the liner to its termination point, hold the liner tight against the pipe wall, and produce dimples at service connections and flared ends at maintenance holes. Lubricants may be used as necessary. Care shall be taken so as not to overstress the felt fiber.
   3. Unless otherwise indicated in the plans or authorized in writing by the Engineer, steam curing, water curing, and UV curing shall all be considered as an acceptable cure method for this project:
      a. Steam Cure:
         1) After inversion is completed, suitable steam-generating equipment is required to distribute steam throughout the pipe.
         2) The equipment should be capable of delivering steam throughout the section to uniformly raise the temperature within the pipe above the temperature required to effect a cure of the resin.
         3) The temperature and pressure maintained in the pipe and the duration of the cure period shall be as recommended by the manufacturer.
         4) The curing of the CIPP must take into account the existing pipe material, the resin system, and ground conditions (temperature, moisture level, and thermal conductivity of soil).
         5) Cooling:
            a) The new pipe should be cooled to a temperature below 113 degrees Fahrenheit before relieving the internal pressure within the section.


© 2026 City of Cottage Grove, Minnesota

b) Cool-down may be accomplished by the introduction of cool water into the section to replace the mixture of air and steam being drained from a small hole made in the downstream end.
c) Care shall be taken in the release of head so that a vacuum will not be developed that could damage the newly installed pipe.

b. Circulated Heated Water Cure:
1) After inversion is completed, suitable heat source and water recirculation equipment are required to circulate heated water throughout the pipe.
2) The equipment should be capable of delivering hot water throughout the section to uniformly raise the water temperature above the temperature required to effect a cure of the resin.
3) The heat source should be fitted with suitable monitors to gauge the temperature of the incoming and outgoing water supply. Another such gauge should be placed between the impregnated tube and the pipe invert at the termination to determine the temperatures during cure.
4) The temperature and pressure maintained in the pipe and the duration of the cure period shall be as recommended by the manufacturer.
5) The curing of the CIPP must take into account the existing pipe material, the resin system, and ground conditions (temperature, moisture level, and thermal conductivity of soil).
6) Cooling:
a) The new pipe should be cooled to a temperature below 100 degrees Fahrenheit before relieving the static head in the inversion stand pipe.
b) Cool-down may be accomplished by the introduction of cool water into the inversion stand pipe water to replace hot water being drained from a small hole made in the down-stream end.
c) Care shall be taken in the release of head so that a vacuum will not be developed that could damage the newly installed pipe.

c. UV Cure – Follow ASTM F2019, Section 6.6 & 6.7:
1) The approved system must utilize an outer and inner film to ensure that the liner remains intact during the insertion process and to protect the resin at all times during the installation and curing process from water and debris contamination and resin migration.
2) A winch should be used to pull the glass fiber liner into position in the pipe. The pulling speed shall not exceed 15ft/min. The liner shall have a lateral fiberglass reinforcement band which runs the entire length of the liner ensuring that the pulling force is transferred to the band and not the fiberglass liner. Once inserted, end plugs shall be used to cap each end of the glass fiber liner to prepare for pressurizing the liner. As with all CIPP products liner restraints should be used in manholes.
3) A slip sheet shall be installed on the bottom one third to one half of the pipe prior to liner insertion, for the purpose of protecting the liner during insertion and reduce the drag, or as recommended by the liner manufacture.
4) The glass fiber liner shall be cured with UV light sources at a constant inner pressure. When inserting the curing equipment in the liner, care should be taken to not damage the inner film material.
5) The UV light sources should be assembled according to the manufacturer's specification for the liner diameter. For the liner to achieve the required water tightness and specified mechanical properties, the following parameters must be


© 2026 City of Cottage Grove, Minnesota

controlled during the entire curing process, giving the Engineer a record of the curing parameters over every segment of the entire length of the liner. This demonstrates that the liner is cured properly. The recording will include:

a) Curing Speed
b) Light Source and Wattage
c) Inner Air Pressure
d) Curing Temperatures
e) Date and Time
f) Length of Liner

This will be accomplished using a computer and data base that are tamper proof. During the curing process, infrared sensors will be used to record curing data that will be submitted to the Engineer with a post CCTV inspection on the portable hard drive.

6) The optimal curing speed, or travel speed of the energized UV light sources, is determined for each length of liner based on internal diameter, liner thickness, and exothermic reaction temperatures.
7) The inner film material should be removed and discarded after cuing to provide optimal quality of the final product.

B. The liner pipe shall be continuous, without joints over the entire length of the pipe. The liner shall be free of all visual and material defects, including but not limited to foreign inclusions, dry spots, pinholes, and delaminations. The surface shall be smooth and free of waviness throughout the pipe.

C. Any defects that will affect the structural integrity or hydraulic capacity of the reconstructed pipe shall be repaired or the liner shall be replaced at the Contractor's expense, including large radial or longitudinal wrinkles that occur in such a size as to reduce the thickness or nominal diameter of the finished CIPP product.

D. Hydrophilic end seals are required to seal the ends of each CIPP liner as it connects to the manhole. These seals will be installed prior to CIPP to prevent water tracking between the CIPP product and the existing host pipe. End Seals shall be LMK Insignia Seals, Trelleborg Liner End Seal or Engineer approved equal.

## 3.04 REINSTATEMENT OF SEWER SERVICE LATERALS

A. The Contractor shall certify he has a minimum of two complete working cutter units plus spare key components on the site before each inversion.

B. Prior to installing the sewer liner (during the television process), the Contractor shall locate, dye-test and record the location of all sewer lateral connections that are in question. The Contractor shall immediately submit this information to the Owner. The Owner will then determine which, if any, sewer services are to be abandoned. Those services designated to be abandoned will not be reinstated.

C. After the sewer lining is complete, the Contractor shall re-establish all service connections except those designated by the Owner to be abandoned. This shall be done without excavation from the interior of the pipe by means of a television camera and a remotely controlled cutting device.


© 2026 City of Cottage Grove, Minnesota

1. If the Contractor is unable to re-establish the service connection from inside the pipe and excavation is necessary, no additional payment will be made for excavations for the purpose of reopening connections and the Contractor will be responsible for all costs and liability associated with such excavation and restoration work.
2. Reestablished service connections shall be clean and smooth, free of jagged edges and conform as closely as possible to the dimension of the existing service.
3. Brush style cutters or similar device will be required to ensure that the laterals are smooth for potential CIPP lateral lining.

D. The sewer main shall be lined prior to lining service laterals, unless approved otherwise by the Engineer.

3.05 INSPECTION

A. CIPP samples shall be prepared and tested in accordance with ASTM F1216, Section 8.1 using either method proposed.

B. Leakage testing of the CIPP shall be accomplished during cure while under a positive head. CIPP products in which the pipe wall is cured while not in direct contact with the pressurizing fluid (e.g., a removable bladder) must be tested by an alternative method approved by the Owner.

C. Visual observation of the CIPP shall be in accordance with ASTM F1216, Section 8.4.

3.06 TELEVISING

A. Televising is required both prior to liner installation and after the CIPP process has been completed.

B. Televising shall be performed by experienced personnel trained in locating breaks, obstacles and service connections.

C. All televising video shall be in color. Each individual reach of pipe between manholes shall be identified as a chapter on the video.

D. Immediately prior to televising, the televisor shall discharge sufficient clear water into the pipe to clean the pipe and assist in identifying sags and misalignment.

E. Post-lining televising shall carefully inspect the interior of the pipeline to identify any conditions which may indicate improper installation.

F. A thumb drive and suitable log shall be kept of all televising and submitted to the Owner.

3.07 CLEAN-UP

A. Upon acceptance of the installation work and testing, the Contractor shall clean-up the project area affected by the operations.


© 2026 City of Cottage Grove, Minnesota

3.08 WARRANTY

A. All lining work shall be fully guaranteed by the Contractor for a period of 2 years from the date of Final Acceptance. During this period, all serious defects discovered by the Owner or Engineer shall be removed and replaced by the Contractor in a satisfactory manner at no cost to the Owner. In addition, the Owner may conduct independent televised inspections, at its own expense, of the lining work at any time prior to the completion of the guarantee period.

**END OF SECTION**


© 2026 City of Cottage Grove, Minnesota

# SECTION 33 01 40

# SEWER PIPE JOINT SEALING

## PART 1 GENERAL

1.01 SUMMARY

A. Section Includes:
   1. Rehabilitation of deteriorated and leaking gravity pipe joints by grout sealing.

B. Related Sections:
   1. Section 00 31 00 - Available Project Information.
   2. Section 01 33 00 - Submittal Procedures.

1.02 PRICE AND PAYMENT PROCEDURES

A. Measurement and Payment:
   1. Seal Pipe Joint: Measurement per each joint sealed by diameter of pipe. Payment will constitute full compensation for all work and costs to setting up and sealing the joint and air testing to verify seal.
   2. Chemical Grout: Measurement per gallon based on gallons of grout required to seal joint/crack. Payment will include all costs related to furnishing and installing the grout with root inhibitor as specified.

1.03 REFERENCES

A. National Association of Sewer Service Companies (NASSCO):
   1. PACP – Pipeline Assessment Certification Program.

1.04 SUBMITTALS

A. Submit the following items consistent with Section 01 33 00:
   1. License of certificate verifying manufacturer's/licensor approval of installer.
   2. Construction schedule and sequence.
   3. Product date and manufacturer's recommended installation procedures.
   4. Installer Completed Project List Which Includes: Project name and the names and phone numbers of the facility owners.
   5. Post sealing televising report:
      a. Submit 1 copy of the Written Report and Video report within 30 days of completion of televising.
      b. Report Requirements:
         1) Each run shall consist of a starting and ending structure number and a zero reading on the counter at center of the starting structure.
         2) Examine each joint sealed by using the pan and tilt feature.
         3) Take a still photograph at each joint sealed.
         4) Take a still photograph of each air test.
      c. Submit a video report in thumb drive format with audio, including a printable version of the written report and full video of all televised pipe runs.


© 2026 City of Cottage Grove, Minnesota

## PART 2 PRODUCTS

2.01 JOINT SEAL MATERIALS

A. Joint Grout:
   1. The grout shall be either Acryamide Gel or Urethane Gel.
   2. The grout shall contain a root inhibitor such as Avanti Barrier 50W or approved equal.

## PART 3 EXECUTION

3.01 PRE-INSTALLATION PROCEDURES

A. Review leaking pipe joints with Engineer prior to sealing joints:
   1. Clean existing pipe by removing interior debris with high-pressure washing:
      a. Method of cleaning shall be reviewed with and approved by the Engineer.
      b. Cost for initial cleaning shall be incidental to the Project.

3.02 INSTALLATION AND AIR TESTING

A. Prepare joint, grout seal joint, and air test in accordance with the recommended specification for sewer system rehabilitation prepared by the National Association of Sewer Service Companies (NASSCO).

3.03 POST SEALING TELEVISION INSPECTION

A. Sanitary segments with sealed joints must be in a clean and ready condition prior to the television inspection.

B. Immediately clean any lines found to be dirty prior to televising. Costs for all such cleaning shall be the responsibility of the Contractor.

C. Personnel completing the televising must be PACP certified.

D. Review of the television inspection of the grouted pipe joints will be performed by the Engineer to verify the joint has been sealed and leaking has stopped.

**END OF SECTION**


© 2026 City of Cottage Grove, Minnesota

# SECTION 33 01 46

# MANHOLE REHABILITATION

## PART 1 GENERAL

### 1.01 SUMMARY

A. Section Includes:
   1. Rehabilitation of manhole walls by sealing joints or lining.

B. Related Sections:
   1. Section 00 31 00 - Available Project Information.
   2. Section 01 33 00 - Submittal Procedures.
   3. Section 33 39 00 - Sanitary Utility Sewer Structures.

### 1.02 PRICE AND PAYMENT PROCEDURES

A. Measurement and Payment:
   1. Spray Line Sanitary Structure: Measurement per linear foot by size of structure lined, measured from the top of the bench to the top of the cone or bottom of top slab section. Payment will include all costs related to setting up, preparing the surface of the structure, wall patching, applying the spray liner, and providing certification of product application, as specified.
   2. Spray Line Storm Structure: Measurement per linear foot by each size of structure lined, measured from the top of the bench to the top of the cone or bottom of top slab section. Payment will include all costs related to setting up, preparing the surface of the structure, wall patching, applying the liner, and providing certification of product application, as specified.
   3. Seal Manhole Joint: Measurement per each manhole by diameter of joint sealed. Payment will constitute full compensation for all work and costs to setting up and sealing the joint and air testing to verify seal.
   4. Chemical Grout: Measurement per gallon based on gallons of grout required to seal joint/crack. Payment will include all costs related to furnishing and installing the grout with root inhibitor as specified.
   5. Patch Structure: Measurement per each storm sewer or sanitary sewer structure patched, regardless of the size of structure or areas patched. Payment will include all cost associated with patching structure walls, doghouses, inverts, benches, rings or any other portion of the structure as specified or as identified in the Drawings.
   6. All other Work and costs of this Section shall be incidental to the Project and included in the Total Base Bid.

### 1.03 SUBMITTALS

A. Submit the following items consistent with Section 01 33 00:
   1. License of certificate verifying manufacturer's/licensor approval of installer.
   2. Construction sequence.
   3. Product date and manufacturer's recommended installation procedures.


© 2026 City of Cottage Grove, Minnesota

4. Installer Completed Project List Which Includes: Project name and the names and phone numbers of the facility owners.

1.04 QUALITY ASSURANCE

A. Applicator's Qualifications: Applicator of products shall be approved by product manufacturer.

B. Certification of Product Application: Upon completion of surface coating, an inspection shall be made by a representative of the manufacturer to ascertain that the product has been applied according to the manufacturer's published specifications and details.

C. Warranty: Contractor shall warrant the workmanship and products for 1 full year after final Project acceptance. Warranty shall cover manhole coating deterioration, spalling of concrete, or other failure of the coating. Failure of the warranty shall be repaired by the Contractor at no charge to the Owner.

**PART 2 PRODUCTS**

2.01 SANITARY STRUCTURE SPRAY LINER

A. Hydrogen sulfide and corrosion resistance liner such as Zebron, Spectrasheild, or approved equal.

B. Polyurethane Coatings: High Performance, 2 part, 100 percent solids polyurethane coating, Zebron series, No. 386.
   1. Physical properties:
      a. Color: Cream
      b. Specific Gravity (ASTM D792): 1.3 (10.84 lbs per gal)
      c. Tensile Strength (ASTM D638): 2500 psi at 77 degrees F (25 degrees C)
      d. Elongation (ASTM D638): Recoverable; 67 percent at 77 degrees F (25 degrees C)
      e. Flexibility (ASTM D792): No effect bending 0.5 mm plate coated with 20 mils over 8 mm diameter mandrel.
      f. Abrasion Resistance (ASTM D4060): 2.12 oz. (20mg)
      g. Thermal Conductivity (ASTM C177): 0.000723 cal. Per sec. cm2 per degree C per cm at 20 degrees C (0.175 btu per hr. ft. at 77 degrees F).
      h. Permeability (ASTM E96): 0.262 gms per m2 per 24-hrs; 0.0358 U.S. perms

C. Modified Polyurea barrier, polyurethane foam, two part application, Spectrasheild.
   1. Physical properties two part component barrier coat:
      a. Color: Pink
      b. Tensile Strength (ASTM D412-06): 2550
      c. Elongation (ASTM D412-06): 269
      d. Tear Strength (PLI) (ASTM D624-00) 428
      e. Flexibility (1/8" mandrel) (ASTM D522-13): pass
      f. Abrasion (mg loss) (ASTM D4060-14): 23 CS17 Wheel, 1 kg per 1000 cycles
      g. Viscosity – B Side: 300 cps
      h. Viscosity – A Side: 350 cps
   2. Physical properties polyurethane foam:
      a. Density (ASTM D1622): 4 –10 lb/cu ft
      b. Compressive Strength (ASTM D1621): 90 – 150 psi


© 2026 City of Cottage Grove, Minnesota

c. Closed Cell Content (ASTM D1940): >95%
d. Water Absorption (ASTM D2842): 0.020 (gm/cc)
e. Water Vapor Transmission (ASTM E96): 0.61 perms
f. Shear Strength (ASTM C273): 225 – 250 psi
g. Recycled Content: Side R 16.5 %
h. Viscosity - Side A: @ 77°F 200 cps
i. Viscosity - Side R: @ 77°F 660 cps

2.02 STORM STRUCTURE SPRAY LINER

A. Hydrogen sulfide and corrosion resistant liner such as Quadex GeoKrete, Strong Company StrongSeal, or approved equal.

2.03 JOINT SEAL MATERIALS

A. Chemical Grout:
1. The grout shall be either Acryamide Gel or Urethane Gel.
2. The grout shall contain a root inhibitor such as Avanti Barrier 50W or approved equal.

2.04 PATCH STRUCTURE

A. Ready Mix Mortar Materials: Sand Mix, 4,000 PSI

B. Mortar: Pre-mix bag intended for underground use conforming to ASTM C270 Type M, minimum compressive strength of 2,500 psi.

**PART 3 EXECUTION**

3.01 GENERAL

A. Spray line structures as directed by Engineer.

B. Follow manufacturer’s installation specifications.

3.02 STRUCTURE SURFACE PREPARATION

A. Clean all loose concrete and debris from the rings, interior walls, and floor of the manhole by using a high-pressure water blast.

B. Patch any voids in the walls or rings with mortar prior to lining.

C. Prior to lining, remove from the manhole all materials left as a result of the cleaning.

D. Clean any exposed, oxidized rebar to a “white metal” SSPC-SPS finish profile by sandblasting.

E. Review leaking manhole joints with Engineer prior to sealing joints.

3.03 SANITARY STRUCTURE SPRAY LINER

A. If Zebron is used, minimum 125 mil liner thickness.


© 2026 City of Cottage Grove, Minnesota

B. If Spectrashield is used, minimum 500 mils total thickness.

3.04 STORM STRUCTURE SPRAY LINER

A. Coat all interior surfaces with a minimum ½" liner thickness.

3.05 PATCH STRUCTURE

A. Clean areas to be patched by removing debris, loose concrete, and any other foreign materials.

B. Patch area with mortar to provide smooth patch that seals the structure.

**END OF SECTION**


© 2026 City of Cottage Grove, Minnesota

# SECTION 33 05 06

# TRENCHING AND BACKFILLING

## PART 1 GENERAL

1.01 SUMMARY

A. Section Includes:
1. Trenching requirements for underground piping and appurtenances, including requirements for excavation, backfill, and compaction.

B. Related Sections:
1. Section 01 33 00 - Submittal Procedures.

1.02 PRICE AND PAYMENT PROCEDURES

A. Measurement and Payment:
1. Trench Excavation: Excavation and backfilling of trench and associated excavation for pipe bedding shall be included in the price of pipe provided.
2. Pipe Bedding All costs associated with providing the bedding material as shown on the Drawings and Standard Detail Plate BED-1 shall be considered incidental to the pipe material.
3. Rock Excavation: Measurement per cubic yard, measured from the top of the rock to a point 12 inches below the outside barrel of pipe and 12 inches from each side of outside diameter of pipe (at bell). The minimum trench width of Rock Excavation shall be 48 inches. For measurement purposes, volume will be computed based on vertical walls for the width specified above. Any additional Rock Excavation required for shelving or OSHA Standards will not be measured for payment and will be considered incidental to the Rock Excavation Bid Item:
    a. The estimated quantity of Rock Excavation shown in the various parts of the Bid Form were calculated as described above, based on the top of rock elevations determined by either soil borings and/or test hole excavations. No guarantee is made as to the actual quantity of Rock Excavation that will be encountered in this Project. No variation from the Unit Price for Rock Excavation will be considered or allowed due to quantity variation.
    b. Separate Bid Items have been provided for Rock Excavation – Soft Rock and Hard Rock. Payment will be made based on the method or rock excavation actually used in the field. Any excavation performed with a standard backhoe bucket will not be considered rock excavation.
4. Haul Excess Rock Off Site (LV): Measurement per cubic yard of material hauled off site, based on a truck count. Payment will include all costs related to hauling and disposing of the material off the Site.
    a. Any excess rock hauled off site must be approved by Engineer prior to removing.
5. Sand Cushion: Measurement per linear foot. Payment at the Unit Price shall include all costs related to providing the material as shown on the Drawings and Standard Detail Plate.
6. Granular Material: Measurement per ton of material compacted in place as determined from weight tickets delivered to the Engineer and shall include all costs related to providing the material as shown on the Drawings and Standard Detail Plate.


© 2026 City of Cottage Grove, Minnesota

7. Improved Pipe Foundation: Measurement per linear foot for each 6 inch layer placed below pipe bedding, not including the first 6 inches:
    a. For example, if 2 feet of foundation material is required under a pipe; 6 inches of material is required for bedding, and payment will be made for 3 linear feet of pipe foundation material, 6 inches deep, per foot of pipe installed.
    b. No payment will be made without the knowledge or consent of the Engineer.
    c. No payment will be made for subgrade rock installed for dewatering purposes only, unless specified.
    d. No payment will be made for disposing of excavated material off the Site that has been created by placement of improved pipe foundation.
8. Temporary Bracing and Sheeting: Considered part of the excavation costs with no additional compensation to Contractor, unless provided for otherwise.
9. Density Tests:
    a. Passing Tests: All costs paid by Owner.
    b. Failing Tests: All costs will be deducted from payments to Contractor.
10. Dewatering: No explicit, direct payment is made for this work. Include the costs in the Unit Prices for the pipe or structure installed.
11. Excavation Special (Pothole Existing Private Utility): This Bid Item is for potholing and exposing existing private utilities that may be in conflict with the proposed public utilities. Measurement per each location exposed regardless of the number of utilities in the respective location. Payment will include all cost related to exposing the potential conflict:
    a. The quantity shown on the Bid Form is an estimated amount. Payment will be based on the quantity actually used, regardless of the estimated quantity. No revision to the Contract Unit Price shall be considered or allowed due to variations of the actual quantity from the estimated amount.
12. All other Work and costs of this Section shall be incidental to the Project and included in the Total Base Bid.

## 1.03 REFERENCES

A. Minnesota Department of Transportation “Standard Specifications for Construction”, 2025 (MnDOT Spec.):
    1. 2106 - Excavation and Embankment – Compacted Volume Method.
    2. 3149 - Granular Material.
    3. 1711 - Use of Explosives.

B. American Society of Testing Materials (ASTM):
    1. A798 -Standard Practice for Installing Factory-Made Corrugated Steel Pipe for Sewers and Other Applications.
    2. D2321 - Standard Practice for Underground Installation of Thermoplastic Pipe for Sewers and Other Gravity-Flow Applications.

C. American Water Works Association (AWWA):
    1. C150 - Thickness Design of Ductile-Iron Pipe.
    2. C151 - American National Standard for Ductile-Iron Pipe, Centrifugally Cast for Water.


© 2026 City of Cottage Grove, Minnesota

## 1.04 SUBMITTALS

A. Provide the following submittals consistent with Section 01 33 00:
   1. Product Data for each Borrow Material:
      a. Name and location of source.
      b. Results of gradation tests.
   2. Blast Monitoring Plan:
      a. Required if blasting within 500 feet of an existing structure and must include details for the following items:
         1) Structure pre and post inspection.
         2) Vibration monitoring.
         3) Exiting utility pre and post inspection.

## 1.05 DEFINITIONS

A. Bedding: The soil material adjacent to the pipe which makes contact with the pipe foundation, walls of the trench, and upper level of backfill. The purpose of bedding is to secure the pipe to true line and grade, and to provide structural support to the pipe barrel.

B. Foundation: Soil material beneath the pipe bedding.

C. Improved Pipe Foundation: Foundation provided by importing material from sources outside the Site. Required when foundation is soft or unstable.

D. Coarse Filter Aggregate: Free draining mineral product used around draintile pipe.

E. Rock Excavation (Hard Rock): Includes such rocks that are **not** decomposed, weathered, or shattered, and which will require blasting, hydro-hammering, barring, wedging, or use of air tools for removal. Also included are any boulders, concrete, or masonry structure (except concrete pavement, curb and gutter, and sidewalk) exceeding 1 cubic yard.

F. Rock Excavation (Soft Rock): Includes such rocks that are decomposed, weathered, or shattered, and which will require the use of ripping equipment, such as rock buckets and ripper hooks.

G. Pipe Zone: That part of the trench below a distance of 1 foot above the top of the pipe.

H. Sand Cushion: Aggregate bedding material used around pipe in areas where rock excavation is encountered, where pipe insulation is used, and when crossing existing utilities.

I. Granular Material: Includes the area below the subgrade and above the pipe zone when shallow pipe is installed in areas of rock excavation.

## 1.06 SEQUENCING AND SCHEDULING

A. Known existing underground utilities are shown on the Drawings in a general way. Owner does not guarantee the locations as shown on the Drawings. Anticipate variations in both the vertical and horizontal locations of underground utility lines from those shown on the Drawings.


© 2026 City of Cottage Grove, Minnesota

B. Uncover utilities and verify both horizontal and vertical alignments sufficiently in advance of construction to permit adjustments in the Work. Determine location of existing utilities and identify conflicts before excavating trench for pipe installation.

C. Notify Gopher State One Call before starting construction in a given area, requesting utility locations in the field.

D. Provide continuance of flow of existing sewer and other facilities.

E. Backfill and compact all trench excavations promptly after the pipe is laid.

F. Salvage and re-spread existing topsoil within trench and spoil pile areas. This work shall be considered incidental to the pipe installation.

1.07 WARRANTY

A. Trench settlements that occur during the correction period and are greater than 1/2 inch as measured by a 10 foot straight edge will be repaired in a manner acceptable to the Owner at the Contractor's expense.

**PART 2 PRODUCTS**

2.01 PIPE BEDDING MATERIAL

A. Comply with MnDOT Spec. 3149.2.B for Granular Material, modified with the following:
   1. No existing onsite granular material encountered during construction may be used unless approved by Engineer, based on quality control gradations provided by the Contractor for the onsite material being placed. The rate of testing will be determined based on changes of the existing material, or as determined by Engineer.
   2. 1 inch maximum aggregate size.
   3. Only virgin materials allowed.

2.02 IMPROVED PIPE FOUNDATION MATERIAL

A. Comply with MnDOT Spec. 3149.2.H, as modified herein:
   1. Crushing Requirements: At least 50-percent of the material by weight retained on the No. 4 sieve shall have 1 or more crushed faces.

2.03 SAND CUSHION MATERIAL

A. Comply with MnDOT Spec. 3149.2.B for Granular Material, modified with the following:
   1. No existing onsite granular material encountered during construction may be used unless approved by Engineer, based on quality control gradations provided by the Contractor for the onsite material being placed. The rate of testing will be determined based on changes of the existing material, or as determined by Engineer.
   2. 1 inch maximum aggregate size.
   3. Only virgin materials allowed.


© 2026 City of Cottage Grove, Minnesota

2.04 BACKFILL MATERIAL

A. Suitable materials selected from the excavated materials to the extent available and practical.

B. Suitable materials are mineral soils free of rubbish, trees, stumps, branches, debris, frozen soil, oversize stone (greater than 1 cubic foot), concrete and bituminous chunks, and other similar unsuitable material.

C. When suitable materials are not available, as determined by the Engineer, comply with MnDOT Spec. 3149.2.B for Granular Material.

**PART 3 EXECUTION**

3.01 EXAMINATION

A. Prior to construction, inspect existing utility structures and surface features, and document condition.

B. Re-inspect foundation soils if rain fall or snow has occurred after initial inspection but prior to placing pipe and bedding.

C. Prior to construction, perform the Excavation Special (Pothole Existing Utility) for the purpose of determining possible conflicts between existing private utilities and proposed public utilities. Allow sufficient time for private utility companies to relocate facilities or Engineer to redesign public utilities.

3.02 PREPARATION

A. Notify Utility Owners to field mark their utility locations.

B. Protect as necessary surface features, such as utility poles, trees, structures, pavement, etc., that are not designated on the Drawings to be removed.

C. Notify utility companies of progress schedule so they can accomplish any necessary relocations and removals that they have agreed to relocate, remove, or support.

D. Implement traffic control.

E. Complete temporary removal or relocation of surface features, such as fences, shrubs, signs, and mailboxes.

F. Strip off existing topsoil from within the trench excavation limits and stockpile. Separate vegetative strippings from salvageable topsoil and dispose of appropriately.

G. Crossing Under Existing Utility Lines:
   1. Use extreme care when excavating in the vicinity of underground utility lines to avoid damage to protective coatings or surfaces.
   2. Where possible and as authorized by the utility, temporarily remove the utility line, install the new pipe, and reinstall the utility line.


© 2026 City of Cottage Grove, Minnesota

3. Where existing line cannot be removed or is not feasible to remove, securely support, excavate under, backfill under and around the utility line to 100-Percent Standard Proctor Density.
4. Report and repair damaged lines prior to backfilling trench.

H. Rock Excavation:
1. Contractor shall submit a blasting plan for review and approval by the Engineer.
2. Use of explosives comply with MnDOT Spec. 1711.

3.03 CONSTRUCTION

A. Conform to ASTM C2321 and C1479, or modified herein.

B. Trench Excavation:
1. Excavate trench to alignment and grade shown on the Drawings.
2. The trench width at the surface may vary and depends on the depth of trench and nature of the excavated material encountered. However, it shall be of ample width to permit the pipe to be laid and jointed properly and the backfill to be placed and compacted properly.
3. Correct any part of the trench that is inadvertently excavated below grade with approved material compacted to 100-Percent Standard Proctor Density.
4. Brace, shore, or sheet trench and provide drainage. Comply with applicable State Regulations relating to industrial safety to a safe angle of repose. Angle of repose may be no less than that required by the Accident Prevention Division of the State Industrial Commission or the requirements of the Occupational Safety and Health Act (OSHA), whichever is most restrictive.
5. Pile all excavated material in a manner that will not endanger the Work or obstruct sidewalks, driveways, gutters, etc.
6. Segregate soils in the excavated material that are not suitable for trench backfill and dispose of in a manner that is consistent with the requirements specified herein under "Backfill Above Pipe Zone."
7. Dispose of excess excavated materials off of right-of-ways and easements in a suitable site selected by the Contractor.
8. Haul materials, other than natural soil materials that are suitable as backfill material, to an approved landfill as directed by the Engineer.
9. It is anticipated that private utility crossings will be encountered and may interfere with the proposed public utilities.
   a. Pothole and expose existing private utility crossings to determine location and elevation.
   b. Perform construction activities in the vicinity of the private utilities so as not to disturb the existing crossings.
10. If frost thickness exceeds 6 inches, all frost chunks must be removed from the Site and non-frozen material must be used to backfill the excavation.

C. Water Control:
1. Dewater the ground as necessary to excavate the trench and install the pipe. All pipe and structures shall be laid in a dry condition prior to backfill. Maintain groundwater level a minimum of 1 foot below the pipe invert. Measure the rate of flow from dewatering pumps at the beginning of the dewatering operation(s) and once per week thereafter. Keep a daily log of hours pumped.


© 2026 City of Cottage Grove, Minnesota

D. Trench Bottom:
   1. Excavate to a sufficient depth to ensure adequate foundation when the bottom of the trench is soft or where in the opinion of the Engineer unsatisfactory foundation conditions exist. Bring excavation up to pipe grade with thoroughly compacted granular materials meeting the requirements of Improved Pipe Foundation Material.
   2. Provide temporary support, remove, relocate, or reconstruct existing utilities located within the trench excavation. Utility shall designate method employed. Use particular care and provide compacted fill or other stable support for utility crossings to prevent detrimental displacement, rupture, or failure.
   3. Excavate to expose existing utilities that cross in close proximity to the planned pipe line to determine the utilities' exact location sufficiently ahead of pipe installation to plan for the avoidance of grade conflict. Measure to determine the utilities' location relative to the planned pipe line location. A deviation from the alignment, grade, and location to avoid conflict may be ordered by the Engineer.
   4. In locations where rock affects the pipe foundation, excavate the trench 12 inches below the pipe and place sand cushion material up to the top of the pipe zone. Blend suitable on Site backfill material with any rock (1 cubic foot maximum size) that is placed back in trench. Dispose of excess rock at a suitable location outside the Site:
      a. Sand Cushion: The removal and disposal of the unsuitable material within the trench and below the invert elevation, and the replacement up to invert elevation with the appropriate bedding material.
      b. Granular Borrow: The removal and disposal of unsuitable material within the trench, above the pipe zone, and replacement up to the subgrade with appropriate backfill material, per Standard Detail Plate BED-4. No additional compensation will be allowed for wider or deeper trenches in rock excavations.
      c. For PVC, Corrugated PP, and HDPE Pipe, the sand cushion shall be placed to 1 foot above the pipe and shall be paid as pipe bedding. The remainder of the trench up to the top of the rock shall be backfilled with granular backfill material.
   5. Improved Pipe Foundation: When unsatisfactory foundation conditions exist, excavate to a depth consisting of solid materials. Fill to pipe grade with thoroughly compacted granular materials meeting the requirements of Improved Pipe Foundation Material.

3.04 PIPE BEDDING

A. PVC Pipe, HDPE pipe, and Corrugated PP: Bed pipe in accordance with ASTM D2321 and Standard Detail Plate BED-1, 3, and 4.

B. RCP: Bed pipe in accordance with ASTM C1479 and Standard Detail Plate BED-2, 3, and 4.

C. DIP: Bed pipe in accordance with AWWA Standard C150 and C151 and Standard Detail Plate BED-2, 3, and 4.

D. Corrugated Metal Pipe: Bed pipe in accordance with ASTM A798 and Standard Detail Plate BED-2, 3, and 4.

E. The pipe trench directly under the pipe shall be loosely placed un-compacted material per the Standard Detail Plates.


© 2026 City of Cottage Grove, Minnesota

F. Use only selected materials free from rock, boulders, debris, or other high void content substances to a level 1 foot above the top of pipe. Remove ledge rock, boulders, and large stones to provide at least 6 inch clearance from pipe.

G. Dig bell holes of ample dimension at each joint such that the pipe barrel rests continuously on the bedding.

3.05 BACKFILL WITHIN PIPE ZONE

A. Backfill immediately after pipe is laid. Restrain pipe as necessary to prevent their movement during backfill operations.

B. Place material completely under pipe haunches in uniform layers not exceeding 4 inches in depth.

C. Hand (shovel/slice) tamp along pipe within haunch zone to provide a solid pipe foundation.

D. Corrugated PP:
   1. Hand (shovel) and thoroughly place pipe bedding material within the exterior corrugation areas adjacent to the pipe.
   2. Compact the pipe bedding bacterial within the pipe zone.

3.06 BACKFILL ABOVE PIPE ZONE

A. Use suitable materials meeting the requirements of Backfill Material.

B. Place in uniform depth layers not to exceed 12 inches before compaction. Complete the compaction of each layer before placing material for the succeeding layer.

C. Compact each layer by mechanical means until it meets the requirements of MnDOT Spec. 2106.3.G.1. Trenches shall be compacted to a minimum of 95-percent, except to 100-percent in the upper 3 feet:
   1. Trenches between existing or future buildings or structures shall be compacted to a minimum of 100-percent for the entire depth of the trench.

D. The method and means of placement and type of compaction equipment used is at the discretion of the Contractor. However, all portions of the trench backfill must meet minimum specified compaction requirements.

E. Any deficiency in quantity of backfill material (caused by shrinkage or settlement) shall be supplied at no additional cost to the Owner.

F. Excavated material not suitable or required for backfill shall be disposed of outside of the Site.

G. It is assumed that all backfilling of trenches will be performed using on Site, excavated trench material. If the Contractor is unable to meet the specified density requirements using that material due to excess moisture content or other circumstance beyond their control, they shall immediately notify the Engineer of such condition. Following investigation of the circumstances, the Engineer, Contractor, and Owner shall mutually agree upon the proper course of action to address the issue.


© 2026 City of Cottage Grove, Minnesota

H. Any excavated rock that is placed back in the trench shall be crushed to a maximum rock size of 12 inches and adequately mixed with suitable on Site backfill material before being placed and compacted in the trench.

3.07 FIELD QUALITY CONTROL

A. Density Tests: to be performed by an approved soils testing firm at various locations and depths throughout the Site as directed by the Engineer. Cooperate fully and provide assistance as necessary to complete these tests.

B. Failed density test areas shall be excavated and re-compacted until the density requirements are met.

**END OF SECTION**


© 2026 City of Cottage Grove, Minnesota

This Page Left Blank Intentionally

# SECTION 33 05 18

# ADJUST MISCELLANEOUS STRUCTURES

## PART 1 GENERAL

1.01 SUMMARY

A. Section Includes:
   1. Adjustment of utility structures.

B. Related Sections:
   1. Section 01 57 13 - Temporary Erosion and Sediment Control.
   2. Section 33 10 00 - Water Utilities.

1.02 PRICE AND PAYMENT PROCEDURES

A. Measurement and Payment:
   1. Payment at the Bid Unit Price for all items is considered compensation in full for all materials and Work required to furnish and install the Bid Item in place.
   2. Adjust Manhole Casting Including New HDPE Adjustment Rings: Measurement per each. Payment will include furnishing and installing new HDPE adjustment rings and fabric, installing new or salvaged casting, excavation, backfilling, salvaging and reinstalling aggregates, and bituminous patch when located within a paved surface.
      a. Existing Manholes:
         1) Payment shall include removal and disposal of existing rings, mortar, and fabric.
      b. New manholes in non-bituminous surfaced areas:
         1) No separate payment for adjustment to final grade will be made. Adjustment of the structure shall be considered incidental to the Bid Items for the furnishing and installation of each type of structure.
   3. Adjust Manhole Casting (Cast Iron Manhole Adjusting Ring): Measurement per each. structure adjusted by means of furnishing and installing steel adjusting ring as specified.
   4. Adjust Valve Box: Measurement per each. Payment will include installing new or salvaged casting, excavation, backfilling, salvaging and reinstalling aggregates, and bituminous patch when located within paved surface.
      a. New valve boxes in non-bituminous surfaced areas:
         1) No separate payment for adjustment to final grade will be made. Adjustment of the structure shall be considered incidental to the Bid Item for Valve and Box.
   5. Adjust Catch Basin Casting Including New HDPE Adjustment Rings: Measurement per each. Payment will include excavation, furnishing and installing hew HDPE adjustment rings and fabric, installing new or salvaged casting, and backfilling.
      a. Existing Catch Basins:
         1) Payment shall include removal and disposal of existing rings, mortar, and fabric.
   6. Clean Out or Curb Box Protective Cover: Measurement will be per each and shall include excavation, furnishing, and installation.
   7. Extend Hydrant Barrel: Measurement will be by the linear foot of adjustment made, including the heavy-duty rod assembly, if required.


© 2026 City of Cottage Grove, Minnesota

8. Valve Box Extension: Measurement per lineal foot on the basis of the linear feet of extension sections installed. Payment includes furnishing and installation of valve box extension sections on either new or existing valve boxes.
9. All work associated with the surfacing removal, excavation, material replacement, compaction, and patching necessary for the adjustment of structures within bituminous surfaced areas shall be considered incidental to the adjustment.
10. For street rehabilitation projects, or if required by the Engineer, use of parachute is incidental to manhole adjustment.
11. All other Work and costs of this Section shall be incidental to the Project and included in the Total Base Bid.

1.03 REFERENCES

A. American Society of Testing and Materials (ASTM):
   1. ASTM A48 – Specification for Gray Iron Casting.
   2. ASTM D1248 – Polyethylene Plastics Molding and Extrusion Materials.

B. Minnesota Department of Transportation "Standard Specifications for Construction" 2025 Edition (MnDOT Spec.):
   1. 3733 - Geosynthetic Materials.

1.04 DEFINITIONS

A. Adjust Manhole or Catch Basin Casting: A change in rim elevation accomplished for manholes or catch basins through the addition or removal of adjustment rings only. Adjustment does not include the addition or removal of sections from the structure.

B. Adjust Valve Box: A change in elevation of the top of the valve box accomplished through the raising or lowering of the existing top section of the valve box only. Adjustment does not include the addition or removal of sections from the valve box.

C. Remove and Replace Adjustment Rings: The process of removing the existing concrete adjustment rings from an existing structure and placing new rings on manholes and catch basins.

1.05 SEQUENCING AND SCHEDULING

A. Contractor, Engineer, and Owner shall inspect all existing structures prior to beginning construction.

B. Owner will remove any foreign material found in the existing structures prior to construction. Remove any foreign material that enters the structures during construction. Notify owner any time foreign materials enter structures regardless of the amount of material.

C. When temporarily removing existing castings and valve box top sections, place castings and valve top sections in the boulevard area directly behind the curb, and in line with the existing structure for the purpose of locating the plated structure and valve box.


© 2026 City of Cottage Grove, Minnesota

D. Use care when removing bituminous surfacing around existing structures to avoid damage to existing materials. Replace any castings or valve box materials damaged during the surfacing removal with equal materials at no cost to the Project.

E. Bituminous street patching associating with the structure adjustment shall be completed the same day as the structure is adjusted, including manhole casting protection.

## PART 2 PRODUCTS

2.01 ADJUSTING RING

A. High-Density Polyethylene (HDPE): Molded high-density polyethylene conforming to ASTM D1248.

B. Cast Iron Manhole Adjusting Ring: R-1979 Series adjusting ring as manufactured by Neenah Foundry, or approved equal.

2.02 ADHESION MATERIALS

A. Ram-Nek material, or approved equal.

B. Sealant (For HDPE Rings):
   1. DOW 999 – A building caulking and glazing sealant, or approved equal.
   2. Open cell polyurethane foam sealant with adhesive backing.

2.03 HYDRANT EXTENSIONS

A. Sections: Match existing hydrant manufacturer and model.

2.04 CASTINGS

A. Manhole, Catch Basin Frames, and Covers:
   1. Requirement: ASTM A48.
   2. Material: Class 35 cast iron. Best grade. Free from injurious defects and flaws.
   3. Finish: Coal tar pitch varnish.
   4. Finish Preparation: Sandblast.
   5. Machine cover and frame contact surface for non-rocking protection.
   6. Type and Style:
      a. NEENAH R-1642 Type “B”, Platen Lid, 2 concealed pick holes, or approved equal, for sanitary manholes. Covers stamped with “SANITARY SEWER”. Use 2 inch letters.
      b. NEENAH R-1642 Type “B”, Platen Lid, Open Hole, or approved equal, for storm manholes. Covers stamped with “STORM SEWER”. Use 2 inch letters.
      c. NEENAH R-1642-A, short casting – 5 inch height.
      d. NEENAH R-3067-VB (use at low points), and R-3067-V (not at low points), or approved equal, for storm sewer catch basin manholes and catch basins.
      e. NEENAH R-4342, or approved equal, for beehive catch basin manholes.
      f. NEENAH R-3290-A (Type A grade), or approved equal, for storm sewer catch basins within commercial driveway entrances.
      g. NEENAH R-1755 E, Water tight casting.


© 2026 City of Cottage Grove, Minnesota

h. NEENAH R-3501TB, or approved equal, for storm sewer catch basins within surmountable curb at residential driveway entrances.

B. Cleanout and curb box protection: Ford Type A1

2.05 VALVE BOX

A. Risers:
1. Valve box riser to fit the Tyler No. 6850, 6855, 6860, or 6865 top section and drop lid, or approved equal.
2. Tyler No. 69 gate valve extension screw adjustable, or approved equal.
3. Cast iron valve adjusting rings are not allowed.
4. Conform to the requirements of Section 33 10 00.

2.06 GEOSYNTHETIC MATERIALS

A. Non-woven filter fabric type 1 in accordance with MnDOT Spec. 3733.B for use in conjunction with HDPE rings.

**PART 3 EXECUTION**

3.01 GENERAL

A. The necessary vertical alignment will be determined by the Engineer and generally as indicated on the schedule of adjustments.

B. Where existing frame is within 0.10 feet of grade, no adjustment is to be made.

C. Raise or lower the frame to match the street or gutter.

D. Protect existing structures from damage.

E. Prevent sand, concrete, or any other debris from entering the structures.

F. HDPE rings to be used on all structures.

G. Adjust all structures located in non bituminous surface areas to final design grade.

H. Immediately following removal of existing casting and adjusting rings, cover structure opening with suitable steel plate to prevent foreign debris from entering structure. Secure plate to top slab or cone with Ram-Nek.

I. For street rehabilitation projects, or if required by the Engineer, use parachute or approved equal to prevent debris from entering structures while active work is being done on or near an existing structure.

J. Installation of Cast Iron Manhole Adjustment Rings shall be as directed by the Engineer.


© 2026 City of Cottage Grove, Minnesota

3.02 PREPARATION

A. Call utility owners to field mark their utility locations.

B. Verify exact location of existing utilities.

3.03 ADJUST MANHOLE AND CATCH BASIN FRAME

A. HDPE Adjusting Ring:
   1. See Standard Detail Plate STR-23.
   2. Remove all dirt, debris, dust, and other deleterious material from surface prior to placement of first ring.
   3. Install adhesive for manhole adjusting rings as per the following:

| Location of Sealant | Type of Sealant |
|---|---|
| Between casting and last ring: | 3/4 inch by 3/4 inch open cell polyurethane foam sealant and 1/2-inch bead of DOW 999 |
| Between intermediate rings: | ½ inch bead of DOW 999 |
| Between cone/top slab and first ring: | 3/4 inch by 3/4 inch open cell polyurethane foam sealant and ½ inch bead of DOW 999 |

   4. Sealant to be placed around entire circumference of each unit with no gaps.
   5. Utilize a variety of thickness of flat units and sloping units to match the required grade and slope of the area at the location of the structure:
      a. Shims are not allowed.
      b. HDPE rings must be stacked plumb and cannot be staggered.
   6. Total Thickness of Rings Allowed: Minimum of 3 inches, maximum of 12 inches.
   7. Wrap entire casting and ring system with geotextile. For structures with cone section, geotextile wrap to extend over a minimum length of 18 inches of the cone.

B. New adjusting rings shall be used on all casting adjustments, regardless of whether casting is salvaged, existing, or new.

C. Cast Iron Manhole Adjusting Ring:
   1. Use of the adjustment ring shall be as directed by the Engineer.
   2. Install per manufacturer's recommendations.
   3. 1- 5/8 inch minimum to 2-1/4 inch maximum steel ring height.
   4. Apply adhesive as recommended by the manufacture.
   5. Only 1 steel ring allowed for adjustment from the initial lift of wear course grade to the final wear course grade.

3.04 ADJUST VALVE BOX

A. Adjust box by screwing top section up or down.

B. Prevent sand, chunks of concrete, or any other debris from entering the valve box:
   1. Short sections inserted inside the existing top section are not allowed to perform adjustment, unless specified.


© 2026 City of Cottage Grove, Minnesota

C. Install approved sections as needed for extension by removing top section, installing additional extension, and re-installing top section.

D. Patch road to match existing pavement section.

3.05 HYDRANT EXTENSIONS

A. Remove upper section.

B. Install extension kit as per manufacturer's requirements.

C. Replace upper and lower rod assemblies with heavy-duty for extensions in excess of 18 inches.

D. Replace the upper section.

3.06 SCHEDULE OF ADJUSTMENTS

A. Manholes Outside of Street Areas:
   1. Permanently adjust casting to design rim elevation at time of structure installation.

B. Manholes Within Street Areas with Concrete Curb and Gutter (Final Wearing Course Paved the Same Year as the Initial Lift Wearing Course):
   1. At time of structure installation, install casting directly upon top slab or cone section with Ram-Nek material.
   2. Prior to street construction, remove casting from all new and existing manholes and cover structure opening with suitable steel plate. Secure plate to top slab or cone with Ram-Nek.
   3. Following initial lift wearing course paving perform adjustment:
      a. Locate structure and expose.
      b. Remove steel plate. Permanently place HDPE rings on structure. Permanently place casting on top ring with adhesive. Wrap filter fabric over casting and rings. For structures with cone section, fabric shall extend a minimum of 18 inches down cone.
      c. Replace and compact gravel base material. Patch initial lift wearing course around structure:
         1) Bituminous patch to be 6 feet by 6 feet, minimum.
      d. Top of casting to be 1/4 to 3/8 inch lower than the final wearing course grade, as measured with a 6 foot straight edge centered on the structure.
      e. Perform adjustment no more than 5 working days prior to placement of bituminous final wearing course, unless approved by Engineer.

C. Manholes Within Street Areas with Concrete Curb and Gutter (Final Wearing Course Paved the Following Year or Later):
   1. At time of structure installation, install casting directly upon top slab or cone section with Ram-Nek material.
   2. Prior to street construction, remove casting from all new and existing manholes and cover structure opening with suitable steel plate. Secure plate to top slab or cone with Ram-Nek.
   3. Following non-wearing course paving perform adjustment:
      a. Locate structure and expose.


© 2026 City of Cottage Grove, Minnesota

b. Remove steel plate. Permanently place HDPE rings on structure. Permanently place casting on top ring with adhesive. Wrap filter fabric over casting and rings. For structures with cone section, fabric shall extend a minimum of 18 inches down cone.
c. Replace and compact gravel base material. Patch initial lift wearing course around structure:
1) Bituminous patch to be 6 feet by 6 feet, minimum.
d. Top of casting to be 3/4 to 1 inch lower than the initial lift wearing course grade, as measured with a 6 foot straight edge centered on the structure.
e. Adjustment of all manholes must be completed within 15 working days after the start of placement of the initial lift wearing course. Adjustment will not be allowed prior to initial lift wearing course paving.

4. Prior to final wearing course paving (the following year or later), perform adjustment:
a. Permanently adjust casting to final grade with steel adjusting ring.
b. Top of casting to be 1/4 to 3/8 inch lower than the final wearing course grade, as measured with a 6 foot straight edge centered on the structure.
c. Perform adjustment no more than 5 working days prior to placement of bituminous final wearing course, unless approved by Engineer.

D. Street Catch Basins:
1. Within Concrete Curb and Gutter:
a. At time of structure installation, place HDPE rings and casting on dry.
b. Establish erosion control around structure per Section 01 57 13. Structure to be allowed to accept runoff during this condition. Basin grate shall not be covered with fabric or other impervious material.
c. Immediately prior to concrete curb and gutter installation, remove erosion control and permanently adjust casting to proper grade.
d. Pour concrete curb and gutter adjacent to structure, permanently setting casting into curb line.
e. Hood opening to be 3-1/2 to 4 inch between top of casting and top of hood opening.

E. Valve Boxes Outside of Street Areas:
1. Permanently adjust box to design rim elevation at time of valve installation.

F. Existing Valve Boxes Outside of Street Areas:
1. Permanently adjust box to design rim elevation prior to final restoration work.

G. Valve Boxes Within Street Areas with Concrete Curb and Gutter (Final Wearing Course Paved the Same Year as the Initial Lift Wearing Course):
1. At time of valve installation, install box.
2. Prior to street construction, lower top section of box sufficiently to avoid damage during street base construction.
3. Perform adjustment following initial lift wearing course paving:
a. Locate box and expose.
b. Adjust box to final wearing course grade by raising of top section.
c. If top section cannot be raised to proper grade, install valve box extension section.
d. Replace and compact gravel base material. Patch initial lift wearing course around structure:
1) Bituminous patch to be 4 feet by 4 feet, minimum.


© 2026 City of Cottage Grove, Minnesota

e. Top of box to be 3/4 inch lower than the final wearing course grade, as measured with a 6 foot straight edge centered on the box.
f. Perform adjustment no more than 5 working days prior to placement of bituminous final wearing course, unless approved by Engineer.

H. Valve Boxes Within Street Areas with Concrete Curb and Gutter (Final Wearing Course Paved the Following Year or Later):
1. At time of valve installation, install box.
2. Prior to street construction, lower top section of box sufficiently to avoid damage during street base construction.
3. Perform adjustment following initial lift wearing course paving:
a. Locate box and expose.
b. Adjust box to initial lift wearing course grade by raising of top section.
c. If top section cannot be raised to proper grade, install valve box extension section.
d. Replace and compact gravel base material. Patch initial lift wearing course around structure:
1) Bituminous patch to be 4 feet by 4 feet, minimum.
e. Top of box to be 3/4 inch lower than the initial lift wearing course grade, as measured with a 6 foot straight edge centered on the box.
f. Adjustment of valve boxes must be completed within 15 working days after the start of placement of the bituminous initial lift wearing course. Adjustment will not be allowed prior to paving.
4. Prior to final wearing course paving (the following year or later), perform adjustment:
a. Remove initial lift wearing course around valve box. Remove sufficient material to allow for compaction of the gravel base.
b. Adjust box to final wearing course grade by raising of top section.
c. If top section cannot be raised to proper grade, install valve box extension section.
d. Replace and compact gravel base material. Patch initial lift wearing course around structure:
1) Bituminous patch to be 4 feet by 4 feet, minimum.
e. Top of box to be 3/4 inch lower than the final wearing course grade, as measured with a 6 foot straight edge centered on the box.
f. Perform adjustment no more than 5 working days prior to placement of bituminous final wearing course, unless approved by Engineer.

## 3.07 TRAFFIC CONTROL

A. Place construction advisory signs, 36 inch by 36 inch, stating “Construction Zone” and “Proceed at Your Own Risk” in black letters on an orange field at all entrances to the Project prior to beginning final adjustment of structures within bituminous surfaced areas.

B. Exposed edges of manhole castings and valve boxes raised prior to bituminous wear course paving shall be painted with “White” or “Pink” paint.

C. Provide appropriate traffic control devices to protect the traveling public during all phases of the structure adjustment work.


© 2026 City of Cottage Grove, Minnesota

3.08 FIELD QUALITY CONTROL

A. For adjustments made within bituminous surfaced areas, any settlements of the bituminous surfacing below the rim of the adjustment structure will require removal and replacement of the bituminous surfacing at the expense of the Contractor.

B. Secure manholes and structures immediately after completion or before suspension of operations at the end of working day with castings or suitable alternative device.

C. Adjust manhole and catch basin frames as described above. Thorough tamping of the material around manhole and catch basin frames is required. Where existing frame is within 0.10 feet of grade, no adjustment is to be made. In such cases the crown or gutter shall be either lowered or raised, as the case may be, to put the street and frame at the same grade.

D. No shims of any material will be allowed.

E. Adjust valve boxes as described above. Thorough tamping of the material around the valve box is required. All valve boxes shall be clean, straight, plumb, and keyable, allowing a 4 inch schedule 40 pipe to be placed and centered over the valves operating nut from the street surface. This alignment check will be performed on all valves after the final adjustment of the valve box and prior to placement of the bituminous wearing course. Supply the alignment tool (4 Inch Schedule 40 Pipe) and perform this test with the Owner's representative.

F. Settlements around structure adjustments that occur during the correction period and result in the casting being higher than the bituminous wearing course will be repaired in a manner acceptable to the Owner at the Contractor’s expense.

**END OF SECTION**


© 2026 City of Cottage Grove, Minnesota

This Page Left Blank Intentionally

# SECTION 33 05 20

# RECONSTRUCT MISCELLANEOUS STRUCTURES

## PART 1 GENERAL

1.01 SUMMARY

A. Section Includes:
   1. Reconstruction of existing utility and drainage structures.

B. Related Sections:
   1. Section 02 41 13 - Selective Site Demolition.
   2. Section 33 05 06 - Trenching and Backfill.
   3. Section 33 05 18 - Adjust Miscellaneous Structures.
   4. Section 33 10 00 - Water Utilities.
   5. Section 33 31 00 - Sanitary Utility Sewer Piping.
   6. Section 33 39 00 - Sanitary Sewerage Structures.
   7. Section 33 40 00 - Stormwater Utilities.

1.02 PRICE AND PAYMENT PROCEDURES

A. Measurement and Payment:
   1. Add Manhole or Catch Basin Section: Per each section installed, according to the height, size, and type of section. Payment will include all costs related to furnishing and installing the section, including excavation, salvaging and reinstalling the cone section or top slab, backfilling, and compaction.
   2. Remove and Replace Cone Section or Top Slab: Per each cone section replaced on an existing sanitary sewer structure, according to size. Payment will include all costs related to furnishing and installing the new section, including excavation, removal and disposal of existing cone section, backfilling, and compaction.
   3. Remove and Replace Casting: Per each replaced, according to type. Payment shall include removal and disposal of existing casting and furnishing new casting. Installation of the casting will be included under the adjustment bid item by type of casting as described in Section 33 05 18.
   4. Install Step: Per each. Payment will include all costs related to furnishing and installing a step within a storm sewer or sanitary sewer structure. Payment will include removal of existing step.
   5. Remove and Replace Step: Per each. Payment will include all costs related to removing, furnishing, and installing the step.
   6. Remove and Replace Inside Drop Pipe: Per each. Payment will include all costs related to removing the existing riser pipe and furnishing and installing a new riser pipe including bend.
   7. Reconstruct Invert: Per each and shall include all costs associated with removals of existing concrete base, concrete work for new invert, and all work related to doghouses.
   8. Reconstruct Doghouse: Per each and shall include all costs associated with all work related to removing the existing doghouses and constructing new.


© 2026 City of Cottage Grove Minnesota

9. Reconstruct Valve Box: Per lineal foot. Payment will include all costs related to furnishing and installing new valve box mid, bottom, and base sections as directed by Engineer, including excavation, removal of existing sections, backfilling, and compaction:
    a. Patching the street to the existing typical section will be paid separately under the Patch Gravel Street Bid Item per Section 32 11 23.
    b. The amount shown on the Bid Form has been estimated. This Bid Item will only be used if, during construction, an existing valve box is determined by the Engineer or Owner to be in need of replacement.
10. Remove and Replace Valve Box Top Section and Cover: Per each replaced. Payment shall include removal and disposal of existing top section and cover and furnishing new top section and cover. Installation of the top section and cover will be included as part of the adjust valve box bid item as described in section 33 05 18.
11. Remove and Replace Valve and Box: Per each, by size and type specified, and will include all costs related to removing and disposing of existing valve and valve box, furnishing and installing new valve, fittings, and valve box per Section 33 10 00.
    a. Patching the street to the existing typical section will be paid separately under the Patch Gravel Street Bid Item per Section 32 11 23.
12. Watermain Evaluation Excavation: Per each and shall include all costs related to excavating the existing water main fitting or valve, exposing all bolts for inspection by Engineer, and backfilling. Payment under this bid item will only be made if the fitting or valve is determined to be acceptable by Engineer and does not require any repair. Additional bid items have been provided for fitting or valve evaluation excavations requiring repair.
13. Watermain Evaluation Excavation and Fitting Bolt Replacement: Per each and will include all costs related to excavating to the existing watermain fitting, replacing all fitting T-bolts with Cor-Blue bolts, and backfilling.
14. Watermain Evaluation Excavation, Valve Repair, and Valve Box Replacement: Per each and will include all costs related to excavating to the existing watermain fitting, repairing the existing valve, removing and replacing valve box, and backfilling.
    a. Valve repairs include:
        1) Remove and replace wrench nut
        2) Remove and replace wrench nut cap screw
        3) Remove and replace bonnet gasket, bolts, and nuts
        4) Remove and replace stuffing box gasket, bolts, and nuts
        5) Remove and replace stem O-rings (2 or 3 each)
        6) All repairs above completed with Grade 316 stainless steel bolts and nuts
        7) Remove and replace all T-bolts with Cor-Blue bolts
15. All other Work and costs of this Section shall be incidental to the Project and included in the Total Base Bid.

## 1.03 REFERENCES

A. American Society of Testing and Materials (ASTM):
    1. ASTM A615 - Specification for Deformed and Plain Billet - Steel Bars for Concrete Reinforcement.
    2. ASTM C139 - Specification for Concrete Masonry Units for Construction of Catch Basins and Manholes.
    3. ASTM C150 - Specification for Portland Cement.
    4. ASTM C206 - Specification for Finishing Hydrated Lime.


© 2026 City of Cottage Grove Minnesota

5. ASTM C478 - Specification for Precast Reinforced Concrete Manhole Sections.

1.04 SEQUENCING AND SCHEDULING

A. Contractor, Engineer, and Owner shall inspect all structures prior to beginning construction.

B. Owner will remove any foreign material found in these structures prior to construction.

C. Remove and dispose of any foreign material which enters the structures during the construction period.

**PART 2 PRODUCTS**

2.01 CONCRETE MATERIALS

A. Standard Portland Cement Type 1, clean washed sand, crushed rock, and gravel free from deleterious materials for monolithic concrete manholes and all manhole bases.

B. Portland Cement: Comply with the requirements of ASTM C150.

C. Design Mix: Subject to the approval of the Engineer. Use proper water-Cement Ratio to obtain 4,000 psi in 28 days.

D. Mortar Materials:
   1. Cement: Type 1 Standard Portland Cement conforming to ASTM C150.
   2. Lime: Normal finishing hydrated lime meeting the requirements of ASTM C206.
   3. Mix Proportions:
      a. 1-part cement to 3-parts of suitable plaster sand for mortar used for plastering the exterior walls of block manholes, catch basins, adjusting rings, and lift holes. Use lime or mortar mix in the amount necessary to make a suitable mixture for plastering purposes, but not to exceed 15 percent by volume.
      b. 1-part Portland cement to 2 parts of sand to which lime or mortar mix may be added but not to exceed 15 percent by volume for mortar used for laying concrete block.

E. Reinforcing Steel: Comply with the requirements of ASTM A615, Grade 60.

2.02 PRE-CAST CONCRETE MANHOLES

A. Sanitary Sewer sections conform to 33 39 00.

B. Storm Sewer sections conform to 33 40 00.

2.03 PRE-CAST SEGMENTAL BLOCK

A. Conform to ASTM C139.

2.04 MANHOLE STEPS

A. Reinforced Polypropylene plastic steps with No.2 deformed grade steel rod.


© 2026 City of Cottage Grove Minnesota

2.05 CASTINGS

A. Conform to Section 33 05 18.

**PART 3 EXECUTION**

3.01 TRENCHING AND BACKFILLING

A. Conform to the requirements of Section 33 05 06.

3.02 REMOVALS

A. Conform to the requirements of Section 02 41 13.

3.03 EXAMINATION

A. Field verify size of structure prior to ordering materials.

3.04 PROTECTION

A. Secure structures immediately after completion or before the end of working day with castings or suitable alternative device.

B. Clearly mark structures to avoid damage by vehicular traffic.

3.05 RECONSTRUCT MANHOLE OR REPLACE MANHOLE SECTION

A. Salvage and reinstall existing casting or install new casting.

B. Salvage and reinstall structure top slab or cone section and mid sections as required.

C. Remove structure section or cone as required to match Drawings.

D. Install new structure or cone.

E. In absence of the o-ring joint seal manhole section using Ram-neck, or approved equal, gasket material applied in accordance with manufacturers recommendations.

F. Rings: install in conformance with Section 33 05 18.

G. Neatly mortar lift holes.

H. Excavate around entire structure to the required depth for reconstruction. After new sections are in place backfill and compact around structure.

3.06 RECONSTRUCT INVERT OR DOGHOUSE

A. Jack hammer or remove entire existing invert or doghouse.

B. Place grout to create smooth seeping invert and/or doghouse.


© 2026 City of Cottage Grove Minnesota

3.07 REMOVE AND REPLACE VALVE AND BOX

A. Coordinate the necessary water main shut down with City Public Works and Resident notification.

B. Excavate and remove existing valve.

C. Install new valve include necessary sleeve per section 33 10 00.

D. Backfill and compact trench per Section 33 05 06.

3.08 WATERMAIN EVALUATION EXCAVATION AND REPAIR

A. The drawings depict locations of the initial watermain evaluation excavations. At these locations, the contractor shall excavate to the existing watermain valve or fitting and expose all bolts. The Engineer will evaluate the condition of the bolts and determine if a repair is needed.

B. If a repair is not needed, the contractor will be paid for one “Watermain Evaluation Excavation” as described above.

C. If a repair is needed, the Contractor will be paid for one “Watermain Evaluation Excavation, Valve Repair, and Valve Box Replacement” or “Watermain Evaluation Excavation and Fitting Bolt Replacement” as described above.

D. The locations shown on the plans are the initial watermain evaluation locations. Depending on the results of the watermain evaluation, additional watermain evaluations and possible repairs at other valves or fittings along the corridor may be completed as directed by the engineer.

**END OF SECTION**


© 2026 City of Cottage Grove Minnesota

This Page Left Blank Intentionally

# SECTION 33 05 28

# CONDUIT FOR PRIVATE UTILITIES

## PART 1 GENERAL

### 1.01 SUMMARY

A. Section Includes:
   1. Placement of PVC and ductile iron pipe conduits to be used at a later date by private utility contractors, developers, and the City of Cottage Grove.

B. Related Sections:
   1. Section 33 05 06 - Trenching and Backfilling.
   2. Section 33 14 18 - Water Utility Service Laterals.
   3. Section 33 31 14 - Sanitary Sewerage Services.

### 1.02 PRICE AND PAYMENT PROCEDURES

A. Measurement and Payment:
   1. Conduit Crossings based on the number of conduits per crossing: Measurement per linear foot of crossing. For example, if a location is determined to require 3 conduits, the Contractor would be paid for the length of the crossing (not the total length of all 3 conduits) under the Bid Item for 3 conduits. Payment at the Unit Price will be considered compensation in full for the installation of the conduits as shown in the Drawings, including conduit, excavation, backfill, compaction, and steel fence posts, regardless of the number of conduits in the trench excavation:
      a. It should be noted that due to the estimation required for Drawing preparation, the quantities of private utility crossings actually constructed may vary significantly from those given in the Bid Form.
      b. The Engineer reserves the right to increase or decrease the conduit quantities with no change to the Contract Unit Price. No additional compensation will be considered or allowed for changes to the estimated quantities or for the deletion of any of these Bid Items in their entirety.
      c. For most crossings, the 4 Inch Diameter PVC conduit is of adequate size for the private utility companies to place their facilities. If a 6 inch conduit is required, measurement shall be identical to that for the 4 inch diameter conduits with payment made under a separate Bid Item for 6 Inch Conduit.
   2. Irrigation Conduit Crossing: Measurement per linear foot. Payment includes 4 inch ductile iron pipe (conduit), trench, excavation, backfill, and steel fence posts markers.
   3. All other Work and costs of this Section shall be incidental to the Project and included in the Total Base Bid.

### 1.03 SEQUENCING AND SCHEDULING

A. Install conduit (provided by contractor) after the public utilities are completed and after the street sub-grade and aggregate backfill work is complete and prior to the gravel base improvements.


© 2026 City of Cottage Grove, Minnesota

B. Bid Items are included in the Bid Form for crossings consisting of single or multiple conduits, based on estimates made at the time of Drawing preparation.

C. At the preconstruction meeting, a final plan of proposed crossings will be presented to the Contractor based on the actual needs of each private utility company. Irrigation crossings will be provided by the Developer. The location of the City's conduit will also be identified on this final plan.

**PART 2 PRODUCTS**

2.01 MATERIALS

A. Conduit: 4 inch and 6 inch diameter PVC, Schedule 40 conforming to Section 33 31 14.

B. Markers: Steel fence posts, 5 feet in length.

C. Irrigation Conduit: 4 inch diameter ductile iron pipe conforming to Section 33 14 18.

**PART 3 EXECUTION**

3.01 GENERAL

A. Excavation and Backfill to conform to Section 33 05 06.

3.02 INSTALLATION

A. Conduit Trenching:
   1. In general, underground conduit shall be installed by trenching.
   2. The location of each crossing will be staked by the Engineer at the time of construction to assist the Contractor in proper placement of conduits both horizontal and vertical locations.
   3. Install conduit as shown on Standard Detail Plate STR-34. Mark ends of crossing locations with steel fence posts. One post required at each end of a crossing, regardless of number of conduits within that crossing.
   4. Trenches for the crossings shall be backfilled and compacted to the same standards as the water and sewer utility trenches.
   5. Excess excavated material shall be removed and disposed of off the Site.
   6. Irrigation conduits shall be 4 inch, ductile iron pipe, installed 4 feet below the design street grade, and shall extend 4 feet beyond the back of curb on both sides of the street, or as directed by Engineer.

3.03 FIELD QUALITY CONTROL

A. The Engineer reserves the right to reject any material or workmanship not in accordance with the Specifications either before or after installation.

B. After trenches are excavated and conduit is placed, the Engineer shall be notified so that an inspection may be made before backfilling.

C. All trench backfill shall be compacted by mechanical means and by "Quality Compaction Method."


© 2026 City of Cottage Grove, Minnesota

**END OF SECTION**


© 2026 City of Cottage Grove, Minnesota

This Page Left Blank Intentionally

# SECTION 33 05 97.36

# UNDERGROUND UTILITY LOCATION SYSTEM

## PART 1 GENERAL

1.01 SUMMARY

A. Section Includes:
   1. Furnishing of all labor, materials, tools, equipment, and performances of all work and services necessary or incidental to providing a system for the location of underground utilities as indicated on the drawings or as specified herein.

B. Related Sections:
   1. Section 01 31 00 - Project Management and Coordination.
   2. Section 01 33 00 - Submittal Procedures.
   3. Section 33 31 23 - Sanitary Sewerage Force Main Piping

1.02 PRICE AND PAYMENT PROCEDURES

A. Measurement and Payment:
   1. Payment for all work associated with the construction of underground utility location system will be incidental to the unit price bid for the utility associated with the system and no separate compensation will be granted.
   2. All other Work and costs of this Section shall be incidental to the Project and included in the Total Base Bid.

1.03 SUBMITTALS

A. Submit Product Data for the following items consistent with Section 01 33 00:
   1. Tracer wire.
   2. Marker balls.
   3. Marker posts.
   4. Grounding rods.

1.04 SEQUENCING AND SCHEDULING

A. Install concurrently with underground utility.

B. Complete initial continuity testing prior to construction of surface improvements above underground utility.

C. Complete continuity testing for final acceptance after all grading and restoration activities have been completed.


© 2026 City of Cottage Grove, Minnesota

## PART 2 PRODUCTS

2.01 TRACER WIRE

A. Soloshot Extra High Strength Tracer Wire manufactured by Copperhead Industries:
   1. Green in color for sewer applications.
   2. Extra high strength copper-clad steel conductor.
   3. #12 AWG, insulated 45 mil.
   4. Minimum 1,150 lb. break load.

2.02 MARKER BALL

A. Extended Range Mall Marker manufactured by 3M:
   1. Green in color for sewer applications.
   2. 4” diameter.

2.03 POST MARKERS

A. Mamba Round Locate Marker Post and Access Point manufactured by Copperhead Industries:
   1. Green color security sleeve cap noted sewer for sewer applications.
   2. 6 terminals.
   3. 72” in length.

2.04 GROUNDING ROD

A. Ground Rod with Twist-on Connector manufactured by Copperhead Industries:
   1. 18-1/2 inch length magnesium rod.
   2. 20 feet #12 AWG wire connected to rod.

## PART 3 EXECUTION

3.01 GENERAL

A. Locating of public utilities within the project limits in accordance with section 01 31 00 Project Management and Coordination shall be incidental to the project and included in the Total Base Bid.

3.02 TRACER WIRE, LOCATING BALLS, AND MARKER POSTS

A. Install tracer wire adjacent to top of pipe:
   1. No underground splicing allowed between marker posts.
   2. Tie/tape to pipe at 10 foot intervals.
   3. Provide 2 feet of slack in each marker post.

B. Install Marker Ball 3 feet below finished grade:
   1. Install marker ball at a maximum of 100 foot intervals along pipe.
   2. Install at each bend
   3. Install at plug locations.


© 2026 City of Cottage Grove, Minnesota

C. Marker Posts
   1. Install at each bend of 45 degrees or larger.
   2. Install at each plug.
   3. Install at ends of casings.
   4. Install on downstream side of lift station and air release structures over pipe.
   5. Install on upstream side of Manhole.

D. Install ground rod at each marker post.

3.03 FIELD QUALITY CONTROL

A. The Contractor shall demonstrate the ability to locate the entire trace wire system using a hand-held locating device.
   1. Locating will be witnessed by the Owner and Engineer.

**END OF SECTION**


© 2026 City of Cottage Grove, Minnesota

This Page Left Blank Intentionally

# SECTION 33 08 30

# COMMISSIONING OF SANITARY SEWERAGE UTILITIES

## PART 1 GENERAL

### 1.01 SUMMARY

A. Section Includes:
   1. Testing of sanitary sewer pipe, manholes, fittings, and miscellaneous appurtenances.

### 1.02 PRICE AND PAYMENT

A. Measurement and Payment:
   1. Televise Sanitary Sewer: Measurement per linear foot regardless of size and type. Pipe will be measured from centerline of structure to centerline of structure. Payment will be compensation for pipe preparation, televising, providing televising report, and all other associated costs.
   2. All other Work and costs of this Section shall be incidental to the Project and included in the Total Base Bid.

### 1.03 REFERENCES

A. American Society of Testing and Materials (ASTM):
   1. D3034 - Specification for Type PSM Poly (Vinyl Chloride) (PVC) Sewer Pipe and Fittings.
   2. F679 - Standard Specification for Poly (Vinyl Chloride) (PVC) Large Diameter Plastic Gravity Sewer Pipe and Fittings.
   3. F1417 - Standard Test Method for Installation Acceptance of Plastic Gravity Sewer Lines using Low-Pressure Air.

B. National Association of Sewer Service Companies (NASSCO):
   1. PACP - Pipeline Assessment Certification Program

### 1.04 SEQUENCING AND SCHEDULING

A. Televise Sanitary Sewer:
   1. Notify Engineer 48 hours in advance of the televising of all pipes.
   2. Complete all required mandrel and air testing prior to televising.
   3. Start televising no sooner than 30 days, but no later than 60 days after all utility, excavation, and street subgrade work is completed as part of this contract.

### 1.05 SUBMITTALS

A. Televising Report:
   1. Submit 1 copy of the Written Report and Video Report within 30 days of completion of televising.


© 2026 City of Cottage Grove, Minnesota

2. Report Requirements:
    a. Each run shall consist of a starting and ending structure number and a zero reading on the counter at center of the starting structure.
    b. Examine each service wye by using the pan and tilt feature.
    c. Show location and length, and identify sags within the flowline of the pipe of 10-percent or greater, example 0.06 feet for an 8 inch diameter pipe.
    d. Location in change in pipe material to be noted.
    e. The video camera operator shall type into the video the station (distance), wye location on either the left or right side of the pipe, and any problems they notice while televising the sewer lines.
    f. Take a still photograph at any questionable joint or possible defect.
3. Provide a Written Report with a graphic cross section of the pipe showing the manholes, all wye connections, and defects. This report shall include PACP codes and descriptions
4. Submit a Video Report in a USB dive format with audio, including a printable version of the Written Report and full video of all televised pipe runs.

**PART 2 PRODUCTS**

Not Used.

**PART 3 EXECUTION**

3.01 EXAMINATION

A. Perform televising pipeline inspections in accordance with NASSCO Pipeline Assessment and Certification Program (PACP). When requested provide the require certification for personnel performing the actual work.

B. Commence test procedures only when pipe and structures are clean and free of dirt, water, or other foreign matter. Pipe cleaning shall be performed in accordance with NASSCO Jetter Code of Practice.

3.02 FIELD QUALITY CONTROL

A. Engineer will observe all tests and visually inspect the Work for compliance.

B. Provide all material, equipment, and labor required to test the sanitary sewer systems.

C. Lamping: Engineer will verify installation for true line and grade, joints are home, no broken or deflective pipes exist, the installed pipe is structurally sound, and that the structures conform to the specified requirements.

D. Gravity Pipe Leak Testing:
1. General:
    a. Test all systems (pipe and structures) for leakage before being put in service. Notify Engineer of the date and time for each test 1 day prior to actual testing.
2. Low Pressure Air Test:
    a. Diameter: Less than or equal to 24 inches.
    b. Must meet criteria set forth in ASTM F1417.


© 2026 City of Cottage Grove, Minnesota

c. Pipe shall be cleaned but may be wetted. Pneumatic balls shall be used to plug the ends at manholes. Low-pressure air shall be introduced into plugged line until the internal air pressure reaches 4.0 psig greater than the average back pressure of any groundwater pressure that may submerge the pipe. At least 2 minutes shall be allowed for the pressure to stabilize before readings are taken and the timing started. During this time, check all plugs with soap solution to detect plug leakage. If any plugs are found to leak, air shall be bled off, the plugs shall be retightened, and the air shall be reintroduced into the line.
d. The sewer line under test will be accepted as having passed the air test if the pressure does not drop more than 0.6 psig in less time than 1/2 minute per inch in diameter of the pipe being tested. The minimum starting pressure is 3.6 psig.
e. Requirement may be waived for reconstruction projects where reconnection of active sewer services prevents testing with permission from Owner.

E. Gravity Pipe Deflection Testing:
1. Required for all flexible pipe.
2. Deflection Testing Methods:
a. Pipe Diameters Through 24 Inches: Pull mandrel through the pipe by hand (without aid of mechanical pulling devices).
b. Pipe Diameters Greater Than 24 Inches Through 36 Inches: Deflections shall be determined by use of a mandrel or a method submitted to and approved by the Engineer. If mandrel is used, it shall be pulled through the pipe by hand (without aid of mechanical pulling devices).
c. Pipe Diameters Greater Than 36 Inches: Deflection measurements shall be determined using a mandrel, rigid bar, a circular rigid template, or by a method approved by the Engineer. If mandrel is used, it shall be pulled through the pipe by hand (without aid of mechanical pulling devices).
3. Deflection testing shall be conducted at least 30 days after the pipe has been backfilled to the desired finish grade on all direct bury flexible pipe and shall be done in the presence of the Engineer.
4. 5-percent deflection allowance.
5. Mandrel Diameter Requirements:
a. Diameter equal to 95 percent of the base inside diameter noted in Appendix XI of ASTM C3034 for PSM PVC pipe (SDR pipe) and calculated from Appendix X2 of ASTM F679 for PS 46 or 115 pipe.
b. Mandrel shall be constructed of rigid steel, be non-adjustable, and have an odd number of legs (9 legs minimum). Its effective length shall not be less than its nominal diameter.
6. Deflection Template/Bar Requirements:
a. The circular template diameter (or rigid bar length) shall be equal to the mandrel diameter requirements as determined above.
b. Circular templates shall be constructed of rigid materials and be non-adjustable.
c. Rigid bars shall have a 1 inch diameter circular section, be constructed of steel, and be non-adjustable.

## 3.03 REQUIREMENTS FOR TEST FAILURES

A. Leak Test Failure:
1. Repair piping as necessary to conform to product requirements.


© 2026 City of Cottage Grove, Minnesota

2. All repair work shall be subject to approval by the Engineer.
3. Chemical type sealants added to the test water will not be permitted.
4. The Engineer may require removal and replacement of pipe in failed test sections.
5. Pay for the cost of replacement, repair, and re-testing of failed pipe sections.

B. Deflection Test Failure:
1. Owner reserves the right to measure the deflection of all flexible pipe at any time during the correction period. Deflections greater than 5 percent of the inside diameter of the pipe shall be considered failure. Re-excavate the trench, re-compact the backfill material, and restore the surface with no additional compensation for such work. Re-rounding of pipes that fail the deflection test will not be allowed.
2. Damaged pipe shall not be reinstalled, but shall be removed from the Site.

3.04 SANITARY SEWER CLOSED CIRCUIT TELEVISION INSPECTION

A. Pre-Televising:
1. Newly installed sanitary sewer segments must be in a clean and ready condition prior to the television inspection.
2. Immediately clean any lines found to be dirty prior to televising. Costs for all such cleaning shall be the responsibility of the Contractor.
3. Provide sufficient water to run through the new sanitary sewer system prior to televising lines to be able to distinguish any sags or alignment problems with the pipe.
4. Personnel completing televising must be PACP certified.
5. Final acceptance of the video report will require the pipe to be clean as a new pipe.

B. General:
1. Provide a camera that will be self-propelled and will have the ability to tilt up and down and pan left and right. The camera must provide color images.
2. Speed shall not exceed 30 feet per minute.

C. Defects:
1. Immediately correct any defects, faulty joints, cracked pipe, or other deficiency noted by the television inspection.
2. A plan for repair shall be presented to and approved by the Owner and Engineer prior to the repair occurring.
3. Re-televise all corrected pipe runs after correction.
4. Any costs associated with correction and re-televising of the sewer system will be paid by the Contractor.

**END OF SECTION**


© 2026 City of Cottage Grove, Minnesota

# SECTION 33 10 00

# WATER UTILITIES

## PART 1 GENERAL

1.01 SUMMARY

A. Section Includes:
1. Water main pipe, hydrants, valves, fittings, and miscellaneous appurtenances.

B. Related Sections:
1. Section 01 33 00 - Submittal Procedures.
2. Section 01 50 00 - Temporary Facilities and Controls.
3. Section 33 05 06 - Trenching and Backfilling.
4. Section 33 05 18 - Adjust Miscellaneous Structures.
5. Section 33 14 18 - Water Utility Service Laterals.

1.02 PRICE AND PAYMENT PROCEDURES

A. Measurement and Payment:
1. Water Main Pipe: Measurement per lineal foot by size and type of pipe installed, as measured along the axis of pipe, without regard to intervening valves or fittings. Water main over depth shall not be measured. Payment at the Bid Unit Price shall include furnishing and installing pipe complete in place as specified:
   a. All required poly encasement on water main system shall be considered part of the Bid Item for the installation of the various components of the system. No separate measurement or payment for poly encasement shall be made.
2. Valve and Box: Measurement per each by size and type of valve and box installed. Payment at the Unit Price shall include furnishing and installing the valve and box, and valve adaptor complete in place as specified.
3. Hydrant: Measurement per each. Payment at the Unit Price shall include furnishing and installing the Hydrant, including hydrant flag, as well as furnishing and delivering the extra flag and one “Out of Service” tag for each hydrant installed to the Owner:
   a. A separate Bid Item will be provided for hydrants requiring vertical bends per Standard Detail Plate WAT-2. Payment will include cost of the hydrant described above and bend.
4. DIP Fittings: Measurement per pound based on the total fitting weight installed, not including accessories, as shown in table below. If fitting is not listed in table below the fitting weight shall be based on AWWA C153/A21.53, latest revision, provided from supplier. Payment at the Unit Price shall include all costs related to furnishing and installing the DIP fitting, all hardware and accessories, and required labor. Any provisions, such as corporations, rods, copper pipe, Megalugs, etc. installed on the plugs of the stub for testing purposes or for future irrigation or service connections, shall be considered incidental to the plug. No separate measurement or compensation shall be made for such provisions:
   a. Fittings required for construction of future irrigation services will be paid under this Bid Item.
   b. Removal of the copper after successful testing will be incidental to this Bid Item.


© 2026 City of Cottage Grove, Minnesota

| TEES, CROSSES, & REDUCERS | | | | | | | | | |
|---|---|---|---|---|---|---|---|---|---|
| RUN SIZE | BRANCH SIZE | MJ X MJ FITTING | | | RUN SIZE | BRANCH SIZE | MJ X MJ FITTING | | |
| | | TEE | CROSS | REDUCER | | | TEE | CROSS | REDUCER |
| 4 | 4 | 32 | 40 | | 18 | 18 | 439 | 520 | |
| 6 | 4 | 46 | 52 | 24 | 20 | 6 | 315 | | |
| 6 | 6 | 56 | 68 | | 20 | 8 | 349 | 364 | |
| 8 | 4 | 60 | 68 | 32 | 20 | 10 | 374 | | 206 |
| 8 | 6 | 72 | 84 | 36 | 20 | 12 | 395 | 423 | 205 |
| 8 | 8 | 86 | 105 | | 20 | 14 | 440 | | 216 |
| 10 | 4 | 78 | 84 | 46 | 20 | 16 | 469 | | 209 |
| 10 | 6 | 90 | 100 | 47 | 20 | 18 | 509 | 558 | 205 |
| 10 | 8 | 105 | 119 | 50 | 20 | 20 | 535 | 640 | |
| 10 | 10 | 114 | 133 | | 24 | 6 | 423 | 434 | |
| 12 | 4 | 94 | 103 | 58 | 24 | 8 | 450 | 464 | |
| 12 | 6 | 110 | 121 | 58 | 24 | 10 | 480 | | |
| 12 | 8 | 125 | 139 | 57 | 24 | 12 | 508 | 529 | 285 |
| 12 | 10 | 140 | 161 | 61 | 24 | 14 | 550 | | 298 |
| 12 | 12 | 160 | 182 | | 24 | 16 | 588 | 641 | 299 |
| 14 | 4 | 152 | | | 24 | 18 | 632 | | 305 |
| 14 | 6 | 178 | 190 | 93 | 24 | 20 | 670 | 757 | 291 |
| 14 | 8 | 193 | 209 | 92 | 24 | 24 | 752 | 870 | |
| 14 | 10 | 211 | 255 | 92 | 30 | 6 | 685 | | |
| 14 | 12 | 228 | 269 | 94 | 30 | 8 | 703 | | |
| 14 | 14 | 262 | 313 | | 30 | 10 | 760 | | |
| 16 | 6 | 228 | 229 | 120 | 30 | 12 | 765 | 787 | 541 |
| 16 | 8 | 233 | 249 | 118 | 30 | 16 | 878 | | 613 |
| 16 | 10 | 253 | 275 | 118 | 30 | 18 | 909 | | 631 |
| 16 | 12 | 272 | 299 | 112 | 30 | 20 | 988 | | 612 |
| 16 | 14 | 307 | | 131 | 30 | 24 | 1077 | 1169 | 478 |
| 16 | 16 | 335 | 399 | | 30 | 30 | 1271 | 1603 | |
| 18 | 6 | 275 | | | 36 | 6 | 927 | | |
| 18 | 8 | 295 | | 165 | 36 | 8 | 1018 | | |
| 18 | 10 | 315 | | 160 | 36 | 12 | 1072 | | 731 |
| 18 | 12 | 335 | 360 | 152 | 36 | 14 | 1135 | | |
| 18 | 14 | 372 | | 168 | 36 | 16 | 1211 | | 804 |
| 18 | 16 | 401 | | 174 | 36 | 18 | 1252 | | 930 |
| 18 | 18 | 439 | 520 | | 36 | 20 | 1350 | | 969 |
| 20 | 6 | 315 | | | 36 | 24 | 1421 | 1528 | 770 |
| 20 | 8 | 349 | 364 | | 36 | 30 | 1674 | | 811 |
| 20 | 10 | 374 | | 206 | 36 | 36 | 1940 | 2229 | |
| 20 | 12 | 395 | 423 | 205 | | | | | |
| 20 | 14 | 440 | | 216 | | | | | |


© 2026 City of Cottage Grove, Minnesota

| BENDS, CAPS, PLUGS, & SLEEVES | | | | | | | |
|---|---|---|---|---|---|---|---|
| | BENDS - MJ X MJ (DEGREES) | | | | CAPS | PLUGS | SLEEVES |
| SIZE | 90 | 45 | 22.5 | 11.25 | MJ X MJ | MJ X MJ | MJ X MJ |
| 3 | 19 | 16 | 15 | 14 | 8 | 8 | 17 |
| 4 | 25 | 22 | 18 | 16 | 9 | 10 | 20 |
| 6 | 39 | 32 | 31 | 30 | 15 | 16 | 29 |
| 8 | 57 | 46 | 46 | 42 | 22 | 26 | 45 |
| 10 | 89 | 70 | 64 | 58 | 32 | 36 | 61 |
| 12 | 108 | 86 | 80 | 67 | 42 | 46 | 76 |
| 14 | 210 | 160 | 136 | 93 | 66 | 75 | 128 |
| 16 | 264 | 202 | 172 | 148 | 92 | 95 | 159 |
| 18 | 335 | 250 | 255 | 205 | 114 | 121 | 200 |
| 20 | 400 | 305 | 310 | 245 | 125 | 135 | 236 |
| 24 | 565 | 405 | 412 | 315 | 166 | 175 | 306 |
| 30 | 930 | 780 | 665 | 600 | 345 | 355 | 634 |
| 36 | 1450 | 1135 | 960 | 820 | 628 | 688 | 889 |
| NOTE: SLEEVE WEIGHTS BASED ON THE USE OF LONG SLEEVES | | | | | | | |

5. Connect to Existing Water Main: Measurement per each according to size. Payment of this Bid Item shall be considered complete compensation for all work associated with the connection to the existing water main, including removal and disposal of the existing plug.
6. Wet Tap: Measurement shall be based on each Wet Tap installed by size. Payment at the Bid Unit Price shall include stainless steel tapping sleeve and hardware, valve, and valve box.
7. Water Main Offset: Measurement per each according to size. Payment shall include all pipe, fittings, restraints, and materials to complete the offset per the Standard Detail Plate WAT-7.
8. Insulation: Measurement per square yard of Insulation at the specified thickness. Payment shall include furnishing and installation of the Insulation.
9. Cut In Valve: Measurement per each according to size and type. Payment shall include all water main cutting, removal, pumping, water main pipe, sleeves, fittings, and valve and box needed to complete the installation.
10. Irrigation Service: Measurement and Payment will be made under each Bid Item to construct in accordance with the Detail Drawing.
11. Hydrant Reconditioning and Painting: Measurement per each and shall include sandblasting, primer coat, top coat, protection, materials, and all work associated with the reconditioning and painting:
    a. Includes furnishing and installing a new hydrant flag, and salvaging and delivering the existing flag to the City of Cottage Grove Public Works Department.
12. Joint Restraint: No Bid Item has been provided. Joint restraint shall be considered incidental to water main installation with no direct payment made.
13. All required testing shall be considered incidental to the installation of the water main system. No direct or separate payment for testing will be made.
14. All other Work and costs of this Section shall be incidental to the Project and included in the Total Base Bid.


© 2026 City of Cottage Grove, Minnesota

1.03 REFERENCES

A. American Water Works Association (AWWA):
   1. C104 - American National Standard for Cement Mortar Lining for Ductile-Iron Pipe and Fittings for Water.
   2. C105 - American National Standard for Polyethylene Encasement for Ductile-Iron Pipe Systems.
   3. C111 - American National Standard for Rubber Gasket Joints for Ductile Iron Pressure Pipe and Fittings.
   4. C116 - American National Standard for Protective Fusion-Bonded Epoxy Coatings for the Interior and Exterior Surfaces of Ductile-Iron and Gray-Iron Fittings for Water Supply Service.
   5. C151 - American National Standard for Ductile-Iron Pipe, Centrifugally Cast, for Water.
   6. C153 - American National Standard for Ductile-Iron Compact Fittings for Water Service.
   7. C502 - AWWA Standard for Dry-Barrel Fire Hydrants.
   8. C504 - AWWA Standard for Rubber-Seated Butterfly Valves.
   9. C515 - AWWA Standard for Resilient-Seated Gate Valves for Water Supply Service.
   10. C550 - American National Standard for Protective Interior Coatings for Valves and Hydrants.
   11. C600 - AWWA Standard for Installation of Ductile-Iron Water Main and Their Appurtenances.
   12. C651 - AWWA Standard for Disinfecting Water Mains.

B. American Society of Testing and Materials (ASTM):
   1. A48 - Gray Iron Castings.
   2. A126 - Gray Iron Castings for Valves, Flanges, and Pipe Fittings.
   3. A536 - Standard Specification for Ductile Iron Castings.
   4. A674 - Standard Practice for Polyethylene Encasement for Ductile Iron Pipe for Water or Other Liquids.
   5. C578 - Specification for Rigid, Cellular Polystyrene Thermal Insulation.

1.04 SUBMITTALS

A. Submit Product Data for the following items consistent with Section 01 33 00:
   1. Pipe, fittings, valves, and hydrants.
   2. Joint restraint and corrosion resistant coatings.

1.05 SEQUENCING AND SCHEDULING

A. Notify the Owner a minimum of 48 hours prior to performing Work. At this time, also notify the City Fire Department of the intended shutdown.

B. Notify all customers connected to water system to be shut down 48 hours in advance of shut down.

C. The Owner must open and close the existing valves for this part of the operation. The Owner is responsible for flushing the mains after the connection is completed; however, the Contractor shall assist the Owner as necessary.

D. Successfully complete required test and inspections before restoration of surface.


© 2026 City of Cottage Grove, Minnesota

1.06 USE OF CITY WATER SYSTEM

A. Any water use for this project will need to be coordinated with the City of Cottage Grove Public Works and a water use permit will be required. Conform to Section 01 50 00.

**PART 2 PRODUCTS**

2.01 DUCTILE IRON PIPE (DIP) AND FITTINGS

A. General Requirement: AWWA C151/A21.51.

B. Cement-mortar lining conforming to AWWA C104/A21.4.

C. Class: As shown on Drawings.

D. Fittings: AWWA C153/A21.53, latest revision, Ductile Iron Compact Fittings, 250-psi working pressure, AWWA C111/A21.11 latest revision, mechanical joint or push-on:
   1. All fittings shall be fusion bonded epoxy coated per ANSI/AWWA C116/A21.

E. Cor-Blue bolts required on all mechanical joint fittings.

2.02 HYDRANT

A. General Requirements: AWWA Standard C502.

B. Specified Hydrant: WB-67-250, or approved equal.

C. Approved Manufacturer: Waterous Pacer, or approved equal.

D. Two 2-1/2 inch hose connections, National Standard Thread.

E. One 4-1/2 inch steamer, Nation Standard Thread.

F. National standard operating nut.

G. 5 inch valve opening.

H. 6 inch mechanical joint pipe connection.

I. Break-off flange with breakable rod coupling.

J. 7 feet-6 inch cover.

K. 16 inch high traffic section.

L. Nozzle caps attached to hydrant with metal chains.

M. Stainless steel hardware.


© 2026 City of Cottage Grove, Minnesota

N. Hydrant Flag: Senior Hydrant Marker w/Red and White Reflective LRSH-85000W: Marker by Vait Products or approved equal:
   1. Fiberglass rod, 5 red and 5 white reflective bands.
   2. Minimum 60 inches long, 3/8 inch diameter.
   3. Stainless steel spring and mounting bracket.

O. Hydrant Tag: Rhino Markers “Out of Service” circular tag, or approved equal:
   1. Size, fit around the steamer nozzle
   2. Red color
   3. White Lettering “Fire Hydrant Out of Service”

P. Hydrants placed where the ground water table is less than 8 feet below the ground surface shall have the drain holes plugged and shall be equipped with a tag stating the need for pumping after use.

Q. High-pressure valve seat (referred to as the Colorado Kit).

R. Color: Painted Waterous Enamel No. V1814-R at the place of manufacture.

2.03 GATE VALVE AND BOX

A. General Requirement: AWWA C515.

B. Ductile iron body valves, bronze mounted.

C. Non-rising stem (NRS), opening by turning counter clockwise, 2 inches square operating nut.

D. O-ring seals.

E. Mechanical joint ends conforming to AWWA C111/A21.11.

F. Stainless steel hardware.

G. All internal and external surfaces of the valve body and bonnet shall have a fusion bonded epoxy coating complying with ANSI/AWWA C550 and C116/A21.16.

H. Wrap gate valves with pipe encasement.

I. Valve Boxes:
   1. 3-piece, ductile iron, screw-type.
   2. Adjustable for 7-1/2 foot depth of cover.
   3. Valve and box considered as integral units.
   4. 5-1/4 inch diameter shafts.
   5. “Stay put” type drop covers, “WATER” on top with extended skirts.
   6. Valve Adaptor: Adaptor Inc., or approved equal.

2.04 BUTTERFLY VALVE AND BOX

A. General Requirement: AWWA C504.


© 2026 City of Cottage Grove, Minnesota

B. Mechanical joint valve ends conforming to AWWA C111/A21.11.

C. AWWA C504, Class 250B.

D. O-ring seal.

E. All stainless steel hardware required.

F. Wrap butterfly valve with pipe encasement.

G. Actuator:
   1. Manually operated.
   2. Traveling nut type sealed, gasketed, and lubricated for underground service.
   3. Open counter clockwise with mechanical stops in the open and closed positions.

H. Valve Box:
   1. 3-piece, ductile iron, screw-type.
   2. Valves and boxes to be considered integral units.
   3. 5-1/4 inch diameter shafts.
   4. Round or oval bases.
   5. “Stay put” type drop covers, bearing the word “WATER” on top with extended skirts.
   6. Valve Adaptor: Adaptor Inc., or approved equal.

2.05 CONDUCTIVITY STRAP

A. As specified by the pipe manufacturer.

2.06 WET TAP

A. Stainless steel tapping sleeve.

B. 3/4 inch gaskets.

2.07 JOINT RESTRAINT

A. Tie Rods: Steel rods with “Star” brand tie bolts.

B. Mechanical Joint Restraint:
   1. Ductile iron conforming to ASTM A536.
   2. Working Pressure: Minimum 250 psi.
   3. EBAA Iron, Inc. Mega-lug, Star Pipe Products Stargrip, Sigma OneLock, or approved equal.
   4. Casting body and wedge assemblies coating:
      a. Fusion bonded epoxy per ANSI/AWWA C116/A2.
      b. Bond coating per manufacturer’s recommendations:
         1) Mega-Bond, Star-Bond, or approved equal.

2.08 PIPE ENCASEMENT

A. Material: Polyethylene film conforming to AWWA C105/A21.5 and ASTM A674, tube form.


© 2026 City of Cottage Grove, Minnesota

B. Color: Black.

C. Film Marking Requirements: Conform to AWWA C105/A21.5 and ASTM A674, including AWWA/ASTM standard, corrosion protection warning and applicable range of nominal pipe diameter size(s) every 2 feet along its length.

2.09 INSULATION

A. Polystyrene Insulation: Extruded type conforming to ASTM C578, Type VI, VII, or V.

2.10 CORPORATION STOP

A. Conform to the requirements of Section 33 14 18.

2.11 COPPER SERVICE PIPE

A. Conform to the requirements of Section 33 14 18.

2.12 HYDRANT RECONDITIONING AND PAINTING

A. Materials shall conform to the following:
   1. Primer: Apply Devoe High Performance Coating, Devran 201H Epoxy Primer.
   2. Paint (hereinafter "Top Coat"): Apply Devoe High Performance Coating, Devthane 379 Polyurethane.
      a. Color: Safety Red
      b. Finish: Glossy Enamel
   3. Proposed paint material substitution for consideration as an approved equal shall be submitted in writing to the Engineer for review and consideration. Otherwise, furnish materials exactly as specified.

**PART 3 EXECUTION**

3.01 GENERAL

A. Locating of public utilities within the project limits in accordance with section 01 31 00 Project Management and Coordination shall be incidental to the project and included in the Total Base Bid.

3.02 PREPARATION

A. Conform to the requirements of Section 33 05 06.

3.03 INSTALLATION OF PIPE

A. Install pipe and fittings in accordance with the manufacturer's instructions and with the details shown on the Drawings.

B. Permanently support, remove, relocate, or reconstruct existing utility pipes, cables, structures, or other appurtenances when they obstruct the line, grade, or location of the pipe or appurtenance.


© 2026 City of Cottage Grove, Minnesota

C. At the time of the connection to the existing water main, the Contractor must notify the Engineer if they are experiencing any existing water main leakage.

D. Remove foreign matter or dirt from the inside of pipe to insure each pipe is clean before it is installed.

E. All jointing of mechanical joint pipe and push-on joint pipe in accordance to AWWA C600.
   1. Mechanical joint restraints and retainer glands are not allowed on existing cast iron pipe.

F. Outside of the spigot and the inside of the bell, wire brush, wipe clean and dry. Keep pipe ends clean until joints are made.

G. Lay and maintain pipe and appurtenances to the alignment, grade, and location shown on the Drawings. No deviation from the Drawing alignment, grade, or location is allowed, unless approved by the Engineer. No pipe shall be laid in water or when the trench conditions are unsuitable for such Work.

H. Provide conductivity throughout the water system. Use of conductivity straps between pipe segments is required at all valve and fitting locations.

I. Cap or plug end of each pipe until next pipe is ready to be laid to prevent debris or groundwater from entering the pipe.

J. Installing Fittings:
   1. General Requirements: AWWA C600.
   2. Set and jointing to existing pipe and fittings as specified for cleaning, laying, and joining pipe.

K. Dead End Lines:
   1. Install plug tapped with a 1 inch corporation at all stubs.
   2. Extend a temporary section of 1 inch copper to above grade for flushing and testing.
   3. Install a temporary curb stop on the 1 inch copper bleed off above ground.
   4. Mark with wood marker per Standard Detail Plate WAT-8.

L. Wrap all ductile iron pipe and fittings with pipe encasement.

M. Backfilling: Conform to Section 33 05 06.

3.04 INSTALLATION OF HYDRANT

A. Location determined by Engineer. A grade stake and location stake will be provided by the Engineer before the hydrant may be set.

B. Set on 8 inch concrete block or approved equal concrete base.

C. Brace according to Drawings.

D. After each hydrant has been set, place around the base of the hydrant not less than 1 cubic yard of coarse filter aggregate (MnDOT Spec. 3149.2.H). Carefully place 2 layers of polyethylene,


© 2026 City of Cottage Grove, Minnesota

minimum 4 mm thickness each, over the rock to prevent backfill material from entering voids in the drain rock.

E. Wrap the hydrant assembly with pipe encasement to the bottom of the break off flange.

F. Maintain hydrants in a plumb position during the backfilling operation.

G. Attach a hydrant marker to the hydrant using an existing flange bolt located at the back of the hydrant.

H. Furnish 1 additional marker for each hydrant to the Owner.

I. Furnish and install a Hydrant tag on all Hydrants until the lines have been tested and accepted. Once accepted, the Contractor shall deliver the hydrant tags to the City Public Works Department.

3.05 INSTALLATION OF VALVE

A. Set and joint valves to new pipe in the manner as specified for cleaning, laying, and jointing pipe. Location to be determined by the Engineer.

B. Valves and boxes shall be supported on an 8 inch concrete block, and encased with coarse filter aggregate (MnDOT Spec. 3149.2.H) as shown on the Drawings.

C. Install valve adaptor.

D. Maintain valve box centered and plumb over the operating nut of the valve.

E. Set top of valve box flush with the existing surface to provide 12 inches of upward adjustment.

F. Wrap valves with pipe encasement. Conform to AWWA C105.

3.06 ANCHORAGE

A. Restrain all hydrant leads, lateral lines, bends, fittings, and valves using Megalug glands as per Drawings.

B. Provide concrete thrust blocking for all bends, tees, hydrants, and plugs:
   1. Requirements per Drawings.
   2. Block tees, plugs, and hydrants to same requirements as 90 degree bend.
   3. Thrust blocking for 4 inch, 6 inch, and 8 inch fittings can be precast concrete blocking.
   4. Thrust blocking must be poured-in-place concrete for fittings 12 inch and larger.
   5. Wrap plug in poly prior to pouring of thrust block in anticipation of future removal.

C. Brace fittings and hydrants securely against undisturbed soil using precast concrete blocks. Rod all joints from main line tee to hydrant gate valve, then from hydrant gate valve to hydrant.

D. Where lines terminate with plugs, restrain the plug and a minimum of the next 3 joints for 6 and 8 inch pipe with 3/4 inch tie rods in conjunction with blocking, as directed by the Engineer. The number of joints retrained for pipe larger than 8 inch shall be, as recommended by manufacturer. The number of rods required is as follows:


© 2026 City of Cottage Grove, Minnesota

| Pipe Size | No. of 3/4 inch Rods |
|---|---|
| 6 inch | 2 |
| 8 inch | 2 |
| 12 inch | 4 |
| 16 inch | 6 |
| 18 inch | 6 |
| 20 inch | 8 |
| 24 inch | 10 |

Joint restraints other than rods shall be as approved by the Engineer.

3.07 INSULATION

A. Review insulation installation with Engineer:
   1. Place insulation between water pipe and sanitary pipe when water main or service is within 1 foot above or below the sanitary pipe.
   2. Place insulation between storm sewer pipe and water main or water service when pipes are separated by less than 2 feet.

3.08 INSTALLATION OF IRRIGATION SERVICE

A. Install at locations shown on the Drawings and as directed by Engineer.

B. Install per Standard Detail Plate SER-6.

3.09 PIPE CONFLICTS (WATER MAIN OFFSET)

A. Install water main offset per Standard Detail Plate WAT-7 and as shown on Drawings.

B. All offset piping shall be DIP.

C. Megalug and Tie Rod type joint restraints.

3.10 HYDRANT RECONDITIONING AND PAINTING

A. Project Coordination:
   1. Conduct preconstruction meeting with Engineer to review Work schedules for all stages of Work, review material application process and discuss any questions before work begins.
   2. Provide written documentation of primer and paint material used for Project.

B. Preparation:
   1. Salvage flag and deliver to Cottage Grove Public Works Department.
   2. Sandblast the entire fire hydrant to base metal to ensure good adhesive bonding of the paint.
   3. Produce smooth surface ready to receive primer material in accordance with manufacturer's recommendations.
   4. During painting and blasting operations, provide adequate protection and containment to prevent damage to adjacent structures and property. This includes protecting the area surrounding the hydrant from overspray through the use of a template or ground covering around the hydrant. The contractor is responsible for any and all damage resulting from painting and/or blasting operations. Remedy all damages within 48 hours of notification.


© 2026 City of Cottage Grove, Minnesota

C. Coatings:
   1. Primer and Top Coat shall be applied to the hydrant by using a spray method application. The use of painting mitts is not allowed on any surface.
   2. Primer: Immediately after surface preparation, apply in accordance with manufacturer's instructions at a rate to provide a uniform dry film thickness of 2.0 to 3.0 mils. Care must be taken to ensure uniform application of material around bolt heads, underside of nozzles, and other surface irregularities. Paint films that show sags, blisters, etc. will not be accepted.
   3. Prior to Top Coat application, primed surface must be clean, dry, undamaged, and free of all contaminants including salt deposits.
   4. Top Coats: Apply to coat in accordance with manufacturer's instructions at a rate to provide a uniform dry film thickness of 2.0 to 3.0 mils. Maintain minimum coverage around bolt heads, underside of nozzles, and other surface irregularities.
   5. Produce glossy, smooth, and uniform surface finish.
   6. Follow product data/application instructions and manufacturer's recommendations in completing the work.

D. Process: follow all requirements for working in public right-of-way, and maintain full compliance with specified traffic control and applicable OSHA Standards. Remove all Primer and Paint Top Coat material that is over-sprayed, dripped, spilled or deposited on sidewalks or other ground surfaces as directed by Engineer at the Contractor's expense.

E. Furnish and install new flag after hydrant has been painted.

3.11 PROTECTION

A. Existing valves and hydrants shall be operated in accordance with Section 01 50 00, Paragraph 3.02, unless under emergency situations.

B. Securely plug all water main openings promptly before suspension of Work at any time to prevent earth or other substances from entering the water main.

C. Mark valve boxes and structures susceptible to being hit by construction or vehicular traffic.

D. All newly installed core blue nuts and bolts that are marred or scratch during installation, shall have an Asphalt Aerosol Spray applied to the surface.

3.12 FIELD QUALITY CONTROL

A. Scope:
   1. Perform hydrostatic pressure, disinfection, and conductivity tests.
   2. The Engineer will observe and verify all tests and visually inspect final Work for compliance.

B. Hydrostatic Pressure Test:
   1. Minimum Test Pressure: 150 psi.
   2. Test Duration: 2 hours.
   3. Criteria: No drop in pressure allowed.
   4. Testing Gauge: Liquid filled, 4-1/2 inches diameter, labeled in 1-psi increments, such as Ashcroft Model 1082, or approved equal.
   5. Test all lines, including hydrant leads, water services, and stubs.


© 2026 City of Cottage Grove, Minnesota

6. Any valved section of water system may be isolated for pressure testing.
7. Sequence and sectioning of water system for pressure testing shall be proposed by Contractor and approved by the Engineer prior to testing.
8. Notify the Engineer immediately if it is determined that the existing valve is not holding pressure during the hydrostatic pressure test.
9. The Contractor may request the City to perform leak detection testing on existing valves if the Contractor has tried testing the line and the required testing pressure will not hold. If the valve is found not to be leaking, the Contractor will be responsible for the testing costs.
10. If a faulty valve is suspected, a meeting with the Engineer and Owner will be necessary to attempt pressure testing prior to the Contractor continuing. No claims by the Contractor for extra work related to pressure testing will be processed if this meeting has not occurred.

C. Disinfection:
1. General Requirement: AWWA C651 – Disinfecting Water Mains (Tablet Method).
2. Place hypochlorite tablets in each section of pipe and all appurtenances:
   a. Attach tablets to top of pipe with a food grade adhesive, such as denture grip.
   b. The estimated number of tablets required per 20 foot length of pipe based on 3-1/4 grain available chlorine per tablet is as follows:

| | Diameter | No. of Tablets |
|---|---|---|
| 1) | 4 Inches | 1 |
| 2) | 6 Inches | 2 |
| 3) | 8 Inches | 3 |
| 4) | 10 Inches | 4 |
| 5) | 12 Inches | 5 |
| 6) | 16 Inches | 9 |
| 7) | 18 Inches | 12 |
| 8) | 20 Inches | 14 |
| 9) | 24 Inches | 20 |
| 10) | 30 Inches | 28 |

   c. Use specified number of tablets to disinfect water main for 24 hours with at least 50 ppm available chlorine, with a residual of at least 10 ppm throughout the length of the main at the end of the 24 hour period.
3. Fill main with water at a velocity of less than 1 foot per second if tablet method is used.
4. Begin flushing after the chlorinated water has been allowed to disinfect the new pipe for 24 hours.
5. 1 bacteria test location is required for every 1,200 feet of water main installed, with a minimum of 2 sample locations per Project. Locations shall be identified by the Engineer. Two bacteria test samples will be taken at each location with a minimum 24 hour separation of the sampling. The first test shall occur no sooner than 24 hours after flushing has been completed.
6. Coordinate all bacteria testing and sampling with Engineer. Assist with the sampling process by operating valves if necessary at the time of testing. Contractor is responsible to coordinate with a certified independent testing firm to complete the sampling and testing. Results shall be provided to Engineer as soon as available.
7. The Contractor is responsible for costs associated with bacteria testing.
8. Water mains needing reflushing or to be rechlorinated, must be done to meet Department of Health and AWWA requirements. Perform re-flushing or re-chlorination within 48 hours of notification of failing tests.


© 2026 City of Cottage Grove, Minnesota

D. Conductivity (DIP):
   1. Conductivity to be provided throughout the water system by use of copper straps or approved conductive gaskets with copper inserts.
   2. Test Current: 350 amps at approximately 30 volts for 4 minutes, then 400 amps for 1 minute without fluctuation.
   3. Fill lines with water prior to test.
   4. Test all lines, including hydrant leads, water services, and stubs.

E. Trench Backfill – Compaction: The Owner shall have an independent testing laboratory perform, as a minimum, the following tests. The location of the tests will be determined by the Engineer:
   1. 1 density test for every 300 feet of trench at varying depths.

F. Adjust valve boxes per Section 33 05 18. Thorough tamping of the material around the valve box is required. All valve boxes shall be clean, straight, plumb, and keyable, allowing a 4 inch schedule 40 PVC pipe to be placed and centered over the valves operating nut from the street surface. This alignment check will be performed on all valves after the final adjustment of the valve box and prior to placement of the bituminous wearing course. Supply the alignment tool (4 Inch Schedule 40 PVC Pipe) and perform this test with the Owner's representative.

**END OF SECTION**


© 2026 City of Cottage Grove, Minnesota

# SECTION 33 14 18

# WATER UTILITY SERVICE LATERALS

## PART 1 GENERAL

### 1.01 SUMMARY

A. Section Includes:
   1. Construction of water service pipe, corporation stops, curb stops and boxes, and all appurtenances.

B. Related Sections:
   1. Section 01 31 00 - Project Management and Coordination.
   2. Section 01 33 00 - Submittal Procedures.
   3. Section 33 05 06 - Trenching and Backfilling.
   4. Section 33 10 00 - Water Utilities.

### 1.02 PRICE AND PAYMENT PROCEDURES

A. Measurement and Payment:
   1. Water Service Line: Measurement per linear foot of each size and type of pipe measured along the axis of the pipe, from centerline of the water main to termination as shown on the Drawings with no regard to intervening fittings. Payment at the Bid Unit Price per foot shall include cost of all pipe, laying, excavation, poly encasement for ductile iron pipe, backfilling, and testing:
      a. Placement and compaction of the aggregate material around the corporation stop and gooseneck is incidental to the service line.
      b. Supplying and installing required markers is incidental to the service line.
      c. Ductile iron fittings will be paid per Section 33 10 00.
      d. Any provisions, such as corporations, rods, copper pipe, etc. installed on the plugs of a stub for testing purposes or for future service connections, shall be considered incidental to the plug.
   2. Corporation Stop: Measurement per each according to size:
      a. Placement and compaction of the required support is incidental.
   3. Curb Stop: Measurement per each according to size:
      a. Required support is incidental.
   4. Gate Valve and Box will be paid per Section 33 10 00.
   5. Material, placement, compaction, and removal of excess trench material to be included in the Bid Unit Price for Water Service Line.
   6. All other Work and costs of this Section shall be incidental to the Project and included in the Total Base Bid.

### 1.03 REFERENCES

A. American Society of Testing and Materials (ASTM):
   1. B88 - Class K Copper Water Service Pipe.


© 2026 City of Cottage Grove, Minnesota

1.04 SUBMITTALS

A. Submit the Product Data for the following items consistent with Section 01 33 00:
   1. Pipe and fittings.
   2. Corporation stop and curb boxes.

1.05 SEQUENCING AND SCHEDULING

A. Install sanitary sewer, water main, and all pipe deeper than the services prior to the installation of the services.

B. Install water service in same trench as the sanitary sewer service, wherever possible.

C. Perform testing of new water main prior to reconnecting existing services.

**PART 2 PRODUCTS**

2.01 SERVICE PIPE

A. Copper Water Tube: 1 inch through 1-1/2 inches for buried service shall be seamless, Type K water tube conforming to ASTM B88:
   1. Fittings shall be designed for working pressures up to 150 psi. Fittings used in service lines shall be designed for connection to the service line by threads, brazing, and/or flaring (compression fittings not allowed).
   2. 4 Inch diameter (minimum) DIP shall be used for services larger than 1-1/2 inches Ductile Iron Pipe (DIP): Conform to Section 33 10 00.

2.02 CORPORATION STOP

A. Approved Manufacturers: Mueller Minneapolis Pattern H-15000, Ford Type 600, Hayes No. 5200, or McDonald No. 74704B.

B. Threaded on outlet for flared connection with copper service pipe.

C. Threaded on inlet end with standard tapered corporation cock thread.

2.03 CURB STOP

A. Approved Manufacturers:
   1. Curb Stops - 1 Inch: Mueller Oriseal, Minneapolis Pattern H-15151, Ford No. B22, Hayes No. 5155 or McDonald No. 76104.
   2. Curb Stops - 1-1/2 Inches: Mueller Oriseal H-15154, Minneapolis pattern, Ford No. B22 Series ball valves, Hayes Nuseal No. 4008 or McDonald No. 76104 ball valves.

B. Same size and connection type for inlet and outlet.

C. Full opening through the valve body with no smaller restriction allowed.


© 2026 City of Cottage Grove, Minnesota

2.04 CURB BOX

A. Approved Manufacturers:
   1. Mueller H-10300.
   2. McDonald 5614 or 5615

B. Adjustable in height from seven feet to eight feet.

C. Stationary rods.

D. 1-1/4 inch upper section.

E. Mueller, Minneapolis pattern base.

2.05 SADDLE

A. Smith Blair stainless steel strap 317 or approved equal.

B. Saddles are to be used at locations shown on the drawings unless otherwise approved by the Engineer.

2.06 GATE VALVE AND BOX

A. Conform to the requirements of Section 33 10 00.

2.07 DIP FITTINGS

A. Conform to the requirements of Section 33 10 00.

**PART 3 EXECUTION**

3.01 GENERAL

A. Locating of public utilities within the project limits in accordance with section 01 31 00 Project Management and Coordination shall be incidental to the project and included in the Total Base Bid.

3.02 INSTALLATION

A. Install in accordance with Standard Detail Plate SER-1 shown on Drawings.

B. Governing Code: Minnesota Plumbing Code and any local ordinances that may apply.

C. Preparation: Conform to Section 33 05 06.

D. Locations of services to be staked by Engineer during construction.

E. Copper Water Service Line:
   1. Parallel and upstream, 3 to 5 feet, of the sewer service line in the same trench.


© 2026 City of Cottage Grove, Minnesota

2. Minimum 7.5 feet of cover from finished grade.

F. Corporation Stop:
   1. Tap into main only when water main is under pressure.
   2. Use 2 layers of pipe tread sealant tape on corporations as a thread lubricant and sealant, or product approved by Owner.
   3. Provide support for corporation and gooseneck per Standard Detail Plate SER-1.
   4. Install saddle per the manufacturer's recommendations.
   5. Operation must be with open wrench.

G. Curb Stop:
   1. Support on full size precast segmental manhole block.
   2. Provide support for curb stop per Standard Detail Plate SER-1.
   3. Grade stakes will be furnished to establish elevations.
   4. Operation must be with open wrench.

H. DIP Water Service Line:
   1. Minimum 7.5 feet of cover from finished grade.
   2. Use mega-lugs and Tie Rods from tee at main to end of service.
   3. Place a plug, tapped with 2 inch corporation stop, at the end of the water service. Attach copper to the corporation and extend to the surface to bleed off air and to perform pressure tests, conductivity tests, and other items. Review such provisions with the Engineer prior to construction.

I. All trenches shall be backfilled and compacted in accordance to Section 33 05 06.

3.03 FIELD QUALITY CONTROL

A. Do not backfill trench until the service has been inspected and approved by the Engineer.

B. Pressure Testing: All water services will be pressure tested in conjunction with the water main, conforming to Section 33 10 00.

C. The Owner shall have an independent testing laboratory perform, as a minimum, the following tests. The location of the tests shall be determined by the Engineer:
   1. 1 density test for every 4 services installed at varying depths.

D. Required documentation shall include completing the "Sewer and Water Service Data Plan Sheet" per detail Drawings, at the time of installation:
   1. Measure and record the longitudinal distance from sanitary sewer wye to the water service line (perpendicular to the water service line) or from the sanitary sewer service line to the corporation stop/tee (perpendicular to the water service line).
   2. Measure and record the longitudinal distance between the sanitary sewer plug and the water curb stop or plug (perpendicular to water line).
   3. Measure and record the length of water line material for each service pipe installed.

3.04 PROTECTION

A. Mark each curb stop and plug with:


© 2026 City of Cottage Grove, Minnesota

1. Solid 4 inches by 4 inches by 8 feet wood post extending 4 feet above and 4 feet below grade.

**END OF SECTION**


© 2026 City of Cottage Grove, Minnesota

This Page Left Blank Intentionally

# SECTION 33 31 00

# SANITARY SEWERAGE PIPING

## PART 1 GENERAL

1.01 SUMMARY

A. Section Includes:
   1. Sanitary sewer gravity pipe, fittings, and miscellaneous appurtenances.

B. Related Sections:
   1. Section 01 31 00 - Project Management and Coordination.
   2. Section 01 33 00 - Submittal Procedures.
   3. Section 01 57 13 - Temporary Erosion and Sediment Control.
   4. Section 02 41 13 - Selective Site Demolition.
   5. Section 33 05 06 - Trenching and Backfilling.
   6. Section 33 08 30 - Commissioning of Sanitary Sewerage Utilities.
   7. Section 33 31 14 - Sanitary Sewerage Services.
   8. Section 33 39 00 - Sanitary Sewerage Structures.

1.02 PRICE AND PAYMENT PROCEDURES

A. Measurement and Payment:
   1. Sanitary Sewer Pipe: Measurement per linear foot by each size, type, and class, furnished and installed complete in place as specified, regardless of depth. Including excavation, backfilling, and compaction. Pipe will be measured from centerline to centerline of manholes, or to the connection point of the existing pipe:
      a. PVC pipe bedding will be paid in accordance with Section 33 05 06.
      b. Improved pipe foundation material, if necessary, shall be per Section 33 05 06.
      c. Furnishing and installing Plugs on dead end lines will be considered incidental to the pipe.
   2. Connect to Existing Manhole: Measurement per each and shall be considered to include all excavation, labor, materials, and equipment necessary to make the required connection, including reconstructing bench/invert.
   3. Connect to Existing Manhole (Core Drill): Measurement per each, regardless of the pipe size required. Payment will be compensation for excavating, core drilling the manhole and reconstructing bench/invert.
   4. Connect to Existing Pipe: Measurement per each, according to size, and shall be considered to include all excavation, labor, materials, and equipment necessary to make the required connection, including removal/salvaging of existing plug.
   5. Wyes: Measurement per each, according to size and type. Payment at the Unit Price will be considered compensation in full for all work and costs to furnish and install the wye as specified:
      a. Cut-In Wye: Measurement per each, according to size and type. Payment shall be considered compensation in full for all work, including excavation, backfilling, labor, materials, concrete encasement (or PVC saddle if approved), and equipment necessary to cut in the wye as specified.
   6. Insulation: Measurement per square yard of Insulation at the specified thickness. Payment will include furnishing and installation of the Insulation.


© 2026 City of Cottage Grove, Minnesota

7. All other Work and costs of this Section shall be incidental to the Project and included in the Total Base Bid.

1.03 REFERENCES

A. American Society of Testing and Materials (ASTM):
   1. C578 - Specification for Rigid, Cellular Polystyrene Thermal Insulation.
   2. D1784 - Specification for Rigid Poly (Vinyl Chloride) (PVC) Compounds and Chlorinated Poly (Vinyl Chloride) (PVC) Compounds.
   3. D3034 - Specification for Type PSM Poly (Vinyl Chloride) (PVC) Sewer Pipe and Fittings.
   4. D3212 - Specification for Joints for Drain and Sewer Plastic Pipes Using Flexible Elastomeric Seals.
   5. F477 - Specification for Elastomeric Seals (Gaskets) for Joining Plastic Pipe.
   6. F679 - Specification for Poly (Vinyl Chloride) (PVC) Large-Diameter Plastic Gravity Sewer Pipe and Fittings.

B. American Water Works Association (AWWA):
   1. C105 - American National Standard for Polyethylene Encasement for Ductile-Iron Pipe Systems.
   2. C111 - American National Standard for Rubber Gasket Joints for Ductile Iron Pressure Pipe and Fittings.
   3. C116 - American National Standard for Protective Fusion-Bonded Epoxy Coatings for the Interior and Exterior Surfaces of Ductile-Iron and Gray-Iron Fittings for Water Supply Service.
   4. C151 - American National Standard for Ductile-Iron Pipe, Centrifugally Cast, for Water.
   5. C153 - American National Standard for Ductile-Iron Compact Fittings for Water Service.
   6. C900 - Polyvinyl Chloride (PVC) Pressure Pipe and Fabricated Fittings, 4 Inches Through 12 Inches, For Water Distribution.
   7. C905 - Polyvinyl Chloride (PVC) Pressure Pipe and Fabricated Fittings, 14 Inches Through 48 Inches, For Water Transmission and Distribution.

1.04 SITE CONDITIONS

A. Sanitary sewer lines are shown on the Drawings in a general way. Anticipate minor variations in both horizontal and vertical directions in locating existing system.

1.05 SUBMITTALS

A. Submit Product Data for the following items consistent with Section 01 33 00:
   1. Pipe and fittings.
   2. Transition couplings.

1.06 SEQUENCING AND SCHEDULING

A. Do not pursue Work causing shut off of utility services (gas, water, electric, telephone, TV, etc.) to consumers until the utility owner is contacted and all consumers are notified of the shut-off schedule.

B. Verify vertical and horizontal location of sanitary sewers sufficiently in advance of installing new pipe to determine the extent of conflict, if any.


© 2026 City of Cottage Grove, Minnesota

C. Successfully complete required inspections and testing before restoration of surface.

## PART 2 PRODUCTS

### 2.01 SOLID WALL PVC PIPE

A. PSM Poly (Vinyl Chloride) (PVC) Plastic Pipe and Fittings (4 Inch Through 15 Inch Diameter):
   1. General: Pipe and fittings shall be made of compounds conforming to ASTM D1784 in accordance with the material requirements of ASTM D3034.
   2. Design: Integral bell gasketed joint and a minimum wall thickness conforming to SDR 26 or 35 as shown on the Drawings.
   3. Joints: Push-on type only with the bell-end grooved to receive a gasket.
   4. Elastomeric Seal (Gasket): A basic polymer of synthetic rubber conforming to ASTM F477. Natural rubber gaskets will not be accepted.
   5. Marking: Each pipe shall be identified with the name of the manufacturer, or trademark and code, nominal pipe size in inches, the PVC cell classification, and “Specification D3034."

B. Polyvinyl Chloride (PVC) Pipe and Fittings (18 Inch Through 48 Inch Diameter):
   1. General: Pipe and fittings shall be made of compounds conforming to ASTM D1784 in accordance with the material requirements of ASTM F679.
   2. Design: Integral bell gasketed joint with a minimum wall thickness conforming to PS 46 or PS 115 as shown on the Drawings.
   3. Joints: Elastomeric gasket joints providing a water-tight seal conforming to ASTM F477.
   4. Marking: Conform to ASTM F679.

C. Polyvinyl Chloride (PVC) Pressure Pipe and Fittings:
   1. General: Pipe shall be made of compounds conforming to ASTM D1784 in accordance with the material requirements of AWWA C900 (4 inch to 12 inch diameter pipe) or AWWA C905 (14 inch to 48 inch diameter pipe).
   2. Design: Cast-iron-pipe-equivalent outside diameter with a minimum pressure class (PC) or dimension ratio (DR) as shown on the Drawings.
   3. Joints: Integral bell with elastomeric gasket joints providing a water-tight seal conforming to ASTM D3212 or ASTM F477.
   4. Fittings: Conform to Ductile Iron Pipe (DIP) and Fittings under this Section.
   5. Marking: Conform to AWWA C900 and C905 respectively.

### 2.02 DUCTILE IRON PIPE (DIP) AND FITTINGS

A. General Requirement: Pipe to conform to AWWA C151/A21.51.

B. Pipe Class: As shown on Drawings.

C. Fittings: AWWA C153/A21.53, Ductile Iron, 250-psi working pressure, AWWA C111/A21.11 latest revision, mechanical joint or push-on.
   1. All fittings shall be fusion bonded epoxy coated per ANSI/AWWA C116/A21.

D. Pipe and Fitting Lining: Protecto 401® Ceramic Epoxy (Ceramic Quartz Filled Amine Cured Novalac Epoxy), PVC Lined Ductile Iron or approved equal.


© 2026 City of Cottage Grove, Minnesota

E. Marking: Conform to AWWA C151/A21.51.

2.03 PIPE BEDDING

A. Conform to Section 33 05 06.

2.04 INSULATION

A. Polystyrene Insulation: Extruded type conforming to ASTM C578, Type VI, VII, or V.

2.05 DIP ENCASEMENT

A. Material: Polyethylene film conforming to AWWA C105/A21.5 and ASTM A674, tube form.

B. AWWA/ASTM standard, corrosion protection warning and applicable range of nominal pipe diameter size(s) every 2 feet along its length.

2.06 TRANSITION COUPLING

A. Coupling consisting of an elastomeric sleeve with incorporating stainless steel tension bands, tightening mechanism, and less than 0.01 inch thick shear ring conforming to ASTM C1173, Type A.

B. Separate bushings are not allowed without approval from the Engineer.

**PART 3 EXECUTION**

3.01 GENERAL

A. Locating of public utilities within the project limits in accordance with section 01 31 00 Project Management and Coordination shall be incidental to the project and included in the Total Base Bid.

3.02 PREPARATION

A. Excavation and Preparation of Trench: Conform to Section 33 05 06.

B. By-Pass Pumping: Contractor is responsible for all items required to maintain sewer flows during construction of the new sanitary sewer line. All Work and costs for this are considered incidental to the Project, unless otherwise specified.

C. Erosion control and dewatering in conformance with Section 01 57 13.

3.03 PIPE INSTALLATION

A. Trench Excavation and Backfill: Conform to Section 33 05 06.

B. Lay and maintain pipe appurtenances to the alignment, grade, and location shown on the Drawings and/or staked in the field. No deviation from the Drawing and/or staked alignment, grade, or location is allowed, unless approved by Engineer. Deviation from grade in excess of 0.02


© 2026 City of Cottage Grove, Minnesota

percent (with no intermediate high points, level sections, or reverse invert slope) may be cause for removal and relaying pipe at the Contractor's expense.

C. Maintain reference line and grade with laser equipment or other equipment approved by the Engineer. Periodically check equipment for adjustment and accuracy. Correct deficiencies in equipment, reference line, and reference grade. Take precautions to prevent deflections in reference line and grade.

D. Non-Conforming Pipe Installation: Remove and reinstall.

E. Inspect pipe for defects and cracks while suspended immediately prior to installation.

F. Install pipe from lower to higher invert elevation with uniform and smooth invert line.

G. Install pipe length spigot ends pointing in the direction of flow.

H. No pipe is to be laid in water or when trench conditions are unsuitable for such Work.

I. Jointing:
   1. In conformance with recommendations of manufacturers of pipe and joint material.
   2. All joints must be watertight.
   3. Hand fill and compact all bell depressions with granular bedding materials to prevent joints from sagging or movement.

J. Cleaning and Protection:
   1. Protection of the existing downstream system/pipe will be required. A temporary plug (approved by the Engineer) shall be installed and maintained until acceptance of the new pipe lines. Once accepted the contractor shall be responsible for the removal of the plug. This work shall be considered incidental to the pipe installation.
   2. Remove all dirt and debris from the interior of each pipe length as the Work progresses.
   3. Protect the exposed end of the pipe with temporary covers or plugs.
   4. Protect in place pipe from damage and dislocation.

K. Flexible Pipe Installation: Conform to ASTM D2321.

L. Sanitary Sewer Service Connections:
   1. Wye:
      a. Wye to be at 45-degree angle from horizontal.
      b. Plugs installed with Atlastic 77, Sonolastic Sealant, or approved equal, or specifically designed for the opening to be plugged.
   2. Risers: Conform to Section 33 31 14.

M. Installation of Insulation:
   1. Place insulation over pipe in locations as shown on the Drawings.
   2. Insulation is to be placed wherever sanitary sewer line comes within 3 feet of any storm structure or line, or within 5 feet of the ground surface.

N. Sanitary Sewer Stub:
   1. Mark each plug location with 4 inch by 4 inch timber to above existing grade.


© 2026 City of Cottage Grove, Minnesota

2. End all sanitary sewer pipe stubs with bell end of pipe and push-on type plug.

## 3.04 CONNECT TO EXISTING SYSTEM

A. Connect to Existing Structure:
   1. Connect to existing structure at location shown on the Drawings.
   2. If rubber boot exists at manhole opening, connect new pipe to the boot and secure.
   3. If manhole opening does not contain rubber boot or the existing boot is damaged, core drill opening in the structure, and install a rubber boot in manhole opening prior to connection of pipe.
   4. Make repairs to the structure required due to the Work performed, including installation of doghouse.
   5. If necessary, the invert shall be reconstructed to accommodate new flow location. Reconstruction of invert will also be necessary if pipe sizes increase.

B. Connect to Existing PVC Pipe (Stub):
   1. Locate and expose end of existing stub.
   2. Remove existing plug and connect to pipe.

C. Cut-in Wye:
   1. Cut-in Wye at location shown on Drawings. Type and size shown on Drawings.
   2. Remove existing mainline pipe as necessary to make connection per Section 02 41 13.
   3. Connect wye to existing mainline pipe with transition coupling. Pour concrete encasement around coupling.
   4. In lieu of cutting in a wye, PVC saddles will be accepted following Engineer review and acceptance of shop drawings provided by Contractor.
   5. Perform excavation and backfilling of trench per Section 33 05 06.

## 3.05 MANHOLE INSTALLATION

A. Conform to the requirements of Section 33 39 00.

## 3.06 PROTECTION

A. Plug all entrances and openings to the system promptly and before suspension of operations at the end of working day.

B. At connections to existing system, temporarily plug the existing pipe with acceptable device until newly installed sewer lines have been accepted.

## 3.07 FIELD QUALITY CONTROL

A. Trench Backfill – Compaction: The Owner shall have an independent testing laboratory perform, as a minimum, the following tests. The location of the tests will be determined by the Engineer:
   1. 1 density test for every 300 feet of trench at varying depths (per 10 foot depth increments).
   2. 1 gradation test per Project for pipe bedding.
   3. 1 gradation test per Project for improved pipe foundation material.

B. Testing in conformance with requirements of Section 33 08 30.


© 2026 City of Cottage Grove, Minnesota

C. Re-test after corrective measures are completed.

D. Cleanup:
   1. Cleaning Pipe and Structures:
      a. If newly installed mains and structures are kept clean during construction, cleaning will not be required.
      b. If newly installed mains and/or structures become dirty due to negligence of the Contractor, cleaning will be performed at the sole expense of the Contractor.
   2. The bailing or flushing method of cleaning pipe is acceptable only if adequate provisions, acceptable to the Engineer, for keeping dirt and debris out of the existing sewer system. Jetting may be required.
   3. Complete prior to final inspection for acceptance.
   4. Notify Engineer when all pipes and structures are clean, which will allow the Owner to schedule the televising of the sewer mains.

**END OF SECTION**


© 2026 City of Cottage Grove, Minnesota

This Page Left Blank Intentionally

# SECTION 33 31 14

# SANITARY SEWERAGE SERVICES

## PART 1 GENERAL

1.01 SUMMARY

A. Section Includes:
   1. Sanitary sewer service pipe and all appurtenances.

B. Related Sections:
   1. Section 01 31 00 - Project Management and Coordination.
   2. Section 01 33 00 - Submittal Procedures.
   3. Section 33 05 06 - Trenching and Backfilling.
   4. Section 33 05 18 - Adjust Miscellaneous Structures.
   5. Section 33 08 30 - Commissioning of Sanitary Sewerage Utilities.
   6. Section 33 31 00 - Sanitary Sewerage Piping.

1.02 PRICE AND PAYMENT PROCEDURES

A. Measurement and Payment:
   1. Service Pipe: Measurement per linear foot for each size and type of pipe installed (including 3 foot end piece) as measured along the axis of the pipe with no regard to intervening fittings. Payment at the Bid Unit Price shall be compensation in full for all Work and costs, including excavation, pipe, fittings, 6 inch PE sleeve (as specified), backfill, and trench compaction.
   2. Pipe Bedding for the PVC Sanitary Sewer Service Pipe: Measurement and payment shall be as per Section 33 05 06.
   3. Improved Pipe Foundation Material: Measurement and Payment shall be as per Section 33 05 06.
   4. No Bid Items have been included for service plugs or marking service ends. Payment for these items shall be included in the linear foot price for Service Pipe.
   5. Service Riser Pipe: Measurement per linear foot, according to size, measured laterally along the laying length from the wye to the top of the last riser section, with no regard to intervening fitting. Payment at the Unit Price will be considered payment in full for all work and costs associated with this Bid Item, including concrete reinforcement of the riser, wye, and main sewer.
   6. Expose and Connect to Existing Wye: Measurement per each, according to size and type. Payment will include all costs related to excavating, exposing, and connecting to an existing wye that was installed by others, including removal of existing plug.
   7. Required measurements of service installations shall be considered incidental to the service installation.
   8. All other Work and costs of this Section shall be incidental to the Project and included in the Total Base Bid.


© 2026 City of Cottage Grove, Minnesota

1.03 REFERENCES

A. American Society of Testing Materials (ASTM):
   1. D1784 - Specification for Rigid Poly (Vinyl Chloride) (PVC) Compounds and Chlorinated Poly (Vinyl Chloride) (PVC) Compounds.
   2. D1785 - Specification for Poly (Vinyl Chloride) (PVC) Plastic Pipe, Schedules 40, 80, and 120.
   3. D2564 - Specification for Solvent Cements for Poly (Vinyl Chloride) (PVC) Plastic Piping Systems.
   4. D2665 - Specification for Poly (Vinyl Chloride) (PVC) Plastic Drain, Waste, and Vent (DWV) Pipe and Fittings.
   5. D2672 - Specification for Joints for IPS PVC Pipe Using Solvent Cement.
   6. D2855 - Standard Practice for Making Solvent-Cemented Joints with Poly (Vinyl Chloride) (PVC) Pipe and Fittings.

1.04 SYSTEM DESCRIPTION

A. This Work shall consist of the construction of sanitary sewer services in accordance with the requirements of the Contract.

B. It is the intent of these Specifications to require the same quality of Work be received on the house services in the way of grade and alignment as is required on the main lines and laterals.

1.05 SUBMITTALS

A. Submit the following items consistent with Section 01 33 00:
   1. Product data for the following items:
      a. Pipe and fittings.
   2. Provide and record information on the “Sewer and Water Service Data Sheet” (Contractor Responsibility), in accordance with 3.02.D. The Data Sheet for recording required measurements will be provided by Engineer.

1.06 SITE CONDITIONS

A. All Work must be confined to within the limits of construction easements or public right-of-way.

1.07 SEQUENCING AND SCHEDULING

A. Install sanitary sewer, water main, and all pipe deeper than the services prior to the installation of the services.

B. Install sanitary sewer service in same trench as the water service or as directed by the Engineer.

**PART 2 PRODUCTS**

2.01 MANUFACTURED UNITS

A. Poly (Vinyl Chloride) (PVC) Schedule 40 Plastic Pipe and Fittings:
   1. General: Pipe and fittings shall be made of compounds conforming to ASTM D1784 in accordance with the material requirements of D1785 and ASTM D2665. PVC fittings shall


© 2026 City of Cottage Grove, Minnesota

conform to ASTM D2665. Belled end pipe shall have tapered sockets conforming to ASTM D2672.
2. Design: Integral belled pipe with a minimum wall thickness conforming to Schedule 40.
3. Solvent Cement Joints: The solvent cement used to join pipe and fittings shall meet the requirements of ASTM D2564.
4. Risers: conform to same requirements as service pipe.

2.02 BEDDING MATERIAL

A. See Section 33 05 06.

**PART 3 EXECUTION**

3.01 GENERAL

A. Locating of public utilities within the project limits in accordance with section 01 31 00 Project Management and Coordination shall be incidental to the project and included in the Total Base Bid.

3.02 INSTALLATION

A. Installation to be in accordance with the Detail Plate shown on Drawings.

B. Governing Code: Minnesota Plumbing Code and any local ordinances that may apply.

C. Locations of services to be staked by Engineer during construction.

D. PVC Risers:
1. Pour concrete casement around connection per Standard Detail Plate SER-9.
2. Support pipe on undisturbed trench slope for entire riser length.
3. Slip joint connection of 4 inch PVC riser to wye.

E. Minimum 1/4 inch per foot (2-percent) grade, unless otherwise directed by the Engineer.

F. Installation and fittings: Similar to main line sanitary sewer pipe installation, conforming to the requirements of Section 33 31 00.

G. Install pipe bedding for PVC sanitary sewer services per Section 33 05 06.

H. The installation of solvent cemented joints shall be in accordance with ASTM D2855.

I. Place glue-on plug at end of service, and a 3 foot long, 6 inch diameter perforated flexible polyethylene sleeve over the end of the vertical riser pipe.

J. All proposed service line locations are shown on the Drawings.

K. Provide and record information on the “Sewer and Water Service Data Sheet” (Contractor Responsibility), in accordance with 3.03.D.


© 2026 City of Cottage Grove, Minnesota

3.03 FIELD QUALITY CONTROL

A. Do not backfill trench until the service has been inspected and approved by the Engineer.

B. Low pressure air and infiltration testing shall conform to Section 33 08 30.

C. The Owner shall have an independent testing laboratory perform, as a minimum, the following tests. The location of the tests shall be determined by the Engineer:
   1. 1 density test for every 3 services installed, at varying depths.

D. Required documentation at the time of installation:
   1. Field measurement of length of each sanitary sewer and water service installed.
   2. Field measure the depth from the surveyed grade stake provided by the Owner to the invert of the 45 degree bend adjacent to the curb stop.
   3. Field measurements as identified on Standard Detail Plate SER-5.
   4. Field measurements for Riser/45 degree bend closest to the main.
      a. Field measure the depth from the surveyed grade stake provided by the Owner to the invert of the 45 degree bend.
      b. Horizontal distance from 45 degree bend to center of main pipe
      c. Length of vertical riser pipe
   5. Provide Engineer with record of measurements on a weekly basis.

3.04 PROTECTION

A. Mark end of new service as shown on Standard Detail Plate SER-1.

**END OF SECTION**


© 2026 City of Cottage Grove, Minnesota

# SECTION 33 31 23

# SANITARY SEWERAGE FORCE MAIN PIPING

## PART 1 GENERAL

### 1.01 SUMMARY

A. Section Includes:
   1. Sanitary sewer force main pipe, fittings, and miscellaneous appurtenances.

B. Related Sections:
   1. Section 01 31 00 - Project Management and Coordination.
   2. Section 01 33 00 - Submittal Procedures.
   3. Section 01 57 13 - Temporary Erosion and Sediment Control.
   4. Section 33 05 06 - Trenching and Backfilling.
   5. Section 33 05 97.36 - Underground Utility Location System.
   6. Section 33 08 30 - Commissioning of Sanitary Sewerage Utilities.

### 1.02 PRICE AND PAYMENT PROCEDURES

A. Measurement and Payment:
   1. Sanitary Sewer Force Main Pipe: Measurement per linear foot for each size, type, and class, furnished and installed complete in place as specified, regardless of depth. Including excavation, backfilling, and compaction. Pipe will be measured from centerline to centerline of manholes, or to the connection point of the existing pipe:
      a. Improved pipe foundation material, if necessary, shall be per Section 33 05 06.
      b. Plugs on dead end lines will be considered incidental to the pipe.
   2. Connect to Existing Manhole: Measurement per each and includes all excavation, labor, materials, and equipment necessary to make the required connection, including reconstructing bench/invert.
   3. Connect to Existing Manhole (Core Drill): Measurement per each, regardless of the pipe size required. Payment will be compensation for excavating, core drilling the manhole and reconstructing bench/invert.
   4. Connect to Existing Force Main Pipe: Measurement per each, according to size, and includes all excavation, labor, materials, and equipment necessary to make the required connection, including removal/salvaging of existing plug.
   5. Insulation: Measurement per square yards of Insulation at the specified thickness. Payment will include furnishing and installation of the Insulation.
   6. All other Work and costs of this Section shall be incidental to the Project and included in the Total Base Bid.

### 1.03 REFERENCES

A. American Society of Testing and Materials (ASTM):
   1. C578 - Specification for Rigid, Cellular Polystyrene Thermal Insulation.


© 2026 City of Cottage Grove, Minnesota

B. American Water Works Association (AWWA):
   1. C105 - American National Standard for Polyethylene Encasement for Ductile-Iron Pipe Systems.
   2. C111 - American National Standard for Rubber Gasket Joints for Ductile Iron Pressure Pipe and Fittings.
   3. C116 - American National Standard for Protective Fusion-Bonded Epoxy Coatings for the Interior and Exterior Surfaces of Ductile-Iron and Gray-Iron Fittings for Water Supply Service.
   4. C151 - American National Standard for Ductile-Iron Pipe, Centrifugally Cast, for Water.
   5. C153 - American National Standard for Ductile-Iron Compact Fittings for Water Service.

1.04 SITE CONDITIONS

A. Sanitary sewer force main lines are shown on the Drawings in a general way. Anticipate minor variations in both horizontal and vertical directions in locating existing system.

1.05 SUBMITTALS

A. Submit Product Data for the following items consistent with Section 01 33 00:
   1. Pipe and fittings.

1.06 SEQUENCING AND SCHEDULING

A. Do not pursue Work causing shut off of utility services (gas, water, electric, telephone, TV, etc.) to consumers until the utility owner is contacted and all consumers are notified of the shut-off schedule.

B. Verify vertical and horizontal location of sanitary sewer force mains sufficiently in advance of installing new pipe to determine the extent of conflict, if any.

C. Successfully complete required inspections and testing before restoration of surface.

**PART 2 PRODUCTS**

2.01 DUCTILE IRON PIPE (DIP) AND FITTINGS

A. General Requirement: Pipe to conform to AWWA C151/A21.51.

B. Pipe Class: As shown on Drawings.

C. Fittings: AWWA C153/A21.53, Ductile Iron, 250-psi working pressure, AWWA C111/A21.11 latest revision, mechanical joint or push-on.
   1. All fittings shall be fusion bonded epoxy coated per ANSI/AWWA C116/A21.

D. Pipe and Fitting Lining: Protecto 401® Ceramic Epoxy (Ceramic Quartz Filled Amine Cured Novalac Epoxy), PVC Lined Ductile Iron or approved equal.

E. Cor-Blue bolts required on all mechanical joint fittings.

F. Marking: Conform to AWWA C151/A21.51.


© 2026 City of Cottage Grove, Minnesota

2.02 PIPE BEDDING

A. Conform to Section 33 05 06.

2.03 INSULATION

A. Polystyrene Insulation: Extruded type conforming to ASTM C578, Type VI, VII, or V.

2.04 DIP ENCASEMENT

A. Material: Polyethylene film conforming to AWWA C105/A21.5 and ASTM A674, tube form.

B. AWWA/ASTM standard, corrosion protection warning and applicable range of nominal pipe diameter size(s) every 2 feet along its length.

**PART 3 EXECUTION**

3.01 GENERAL

A. Locating of public utilities within the project limits in accordance with section 01 31 00 Project Management and Coordination shall be incidental to the project and included in the Total Base Bid.

B. Install underground utility location system in accordance with Section 33 05 97.36 with all force main piping.

3.02 PREPARATION

A. Excavation and Preparation of Trench: Conform to Section 33 05 06.

B. By-Pass Pumping: Contractor is responsible for all items required to maintain sewer flows during construction of the new sanitary sewer line. All Work and costs for this are considered incidental to the Project, unless otherwise specified.

C. Erosion control and dewatering in conformance with Section 01 57 13.

3.03 PIPE INSTALLATION

A. Trench Excavation and Backfill: Conform to Section 33 05 06.

B. Lay and maintain pipe appurtenances to the alignment, grade, and location shown on the Drawings and/or staked in the field. No deviation from the Drawing and/or staked alignment, grade, or location is allowed, unless approved by Engineer. Deviation from grade in excess of 0.02 percent (with no intermediate high points, level sections, or reverse invert slope) may be cause for removal and relaying pipe at the Contractor's expense.

C. Non-Conforming Pipe Installation: Remove and reinstall.

D. Inspect pipe for defects and cracks while suspended immediately prior to installation.


© 2026 City of Cottage Grove, Minnesota

E. Install pipe from lower to higher invert elevation with uniform and smooth invert line.

F. Install pipe length spigot ends pointing in the direction of flow.

G. No pipe is to be laid in water or when trench conditions are unsuitable for such Work.

H. Wrap all pipe and fittings with pipe encasement.

I. Jointing:
   1. In conformance with recommendations of manufacturers of pipe and joint material.
   2. All joints must be watertight.
   3. Hand fill and compact all bell depressions with granular bedding materials to prevent joints from sagging or movement.

J. Cleaning and Protection:
   1. Protection of the existing downstream system/pipe will be required. A temporary plug (approved by the Engineer) shall be installed and maintained until acceptance of the new pipe lines. Once accepted the contractor shall be responsible for the removal of the plug. This work shall be considered incidental to the pipe installation.
   2. Remove all dirt and debris from the interior of each pipe length as the Work progresses.
   3. Protect the exposed end of the pipe with temporary covers or plugs.
   4. Protect in place pipe from damage and dislocation.

K. Installation of Insulation:
   1. Place insulation over pipe in locations as shown on the Drawings.
   2. Insulation is to be placed wherever sanitary sewer line comes within 3 feet of any storm structure or line, or within 5 feet of the ground surface.

L. Sanitary Sewer Force Main Stub:
   1. Mark each plug location with 4 inch by 4 inch timber to above existing grade.
   2. End all sanitary sewer pipe stubs with bell end of pipe and push-on type plug.

## 3.04 CONNECT TO EXISTING SYSTEM

A. Connect to Existing Structure:
   1. Connect to existing structure at location shown on the Drawings.
   2. If rubber boot exists at manhole opening, connect new pipe to the boot and secure.
   3. If manhole opening does not contain rubber boot or the existing boot is damaged, core drill opening in the structure, and install a rubber boot in manhole opening prior to connection of pipe.
   4. Make repairs to the structure required due to the Work performed, including installation of doghouse.
   5. If necessary, the invert shall be reconstructed to accommodate new flow location. Reconstruction of invert will also be necessary if pipe sizes increase.

## 3.05 MANHOLE INSTALLATION

A. Conform to the requirements of Section 33 39 00.


© 2026 City of Cottage Grove, Minnesota

3.06 FIELD QUALITY CONTROL

A. Trench Backfill – Compaction: The Owner shall have an independent testing laboratory perform, as a minimum, the following tests. The location of the tests will be determined by the Engineer:
   1. 1 density test for every 300 feet of trench at varying depths (per 10 foot depth increments).
   2. 1 gradation test per Project for pipe bedding.
   3. 1 gradation test per Project for improved pipe foundation material.

B. Hydrostatic Pressure Test:
   1. Minimum test pressure: 100 psi.
   2. Test duration: 2 hours.
   3. Criteria: No drop in pressure allowed.
   4. Testing Gauge: Liquid filled, 4-1/2 inches diameter, labeled in 1-psi increments, such as Ashcroft Model 1082, or approved equal.
   5. Sequence and sectioning of water system for pressure testing shall be proposed by Contractor and approved by the Engineer prior to testing.

C. Cleanup:
   1. Cleaning Pipe and Structures:
      a. If newly installed mains and structures are kept clean during construction, cleaning will not be required.
      b. If newly installed mains and/or structures become dirty due to negligence of the Contractor, cleaning will be performed at the sole expense of the Contractor.
   2. The bailing or flushing method of cleaning pipe is acceptable only if adequate provisions, acceptable to the Engineer, for keeping dirt and debris out of the existing sewer system. Jetting may be required.
   3. Complete prior to final inspection for acceptance.
   4. Notify Engineer when all pipes and structures are clean, which will allow the Owner to schedule the televising of the sewer mains.

**END OF SECTION**


© 2026 City of Cottage Grove, Minnesota

This Page Left Blank Intentionally

# SECTION 33 39 00

# SANITARY SEWERAGE STRUCTURES

## PART 1 GENERAL

1.01 SUMMARY

A. Section Includes:
   1. Sanitary sewer manholes and miscellaneous appurtenances.

B. Related Sections:
   1. Section 01 33 00 - Submittal Procedures.
   2. Section 33 05 18 - Adjust Miscellaneous Structures.
   3. Section 33 05 06 - Trenching and Backfilling.
   4. Section 33 31 00 - Sanitary Sewerage Piping.

1.02 PRICE AND PAYMENT PROCEDURES

A. Measurement and Payment:
   1. Refer to Section 33 31 00 for gravity sewer pipe pay items.
   2. Sanitary Sewer Manhole: Measurement per linear foot of depth from final rim elevation to lowest invert elevation based on the diameter of the manhole. Payment will include the manhole, manhole frame, and casting as specified on the Drawings:
      a. Separate payment shall be made in accordance with Section 33 05 18 for placement of frame, casting, and adjustment rings.
      b. 70-percent partial payment will be made upon installation of the structure and 30-percent payment will be made upon final completion of doghouses and inverts and submittal of Manhole/Catch Basin Elevation Report.
   3. Construct Manhole Over Existing Pipe: Measurement per linear foot of depth from final rim elevation to lowest invert elevation based on the diameter of the manhole. Payment will include the manhole, manhole frame, and casting as specified in the Drawings, connection to the existing pipe, and any necessary modifications to existing pipe and manhole to complete the connection.
   4. Sanitary Manhole, Spray Liner: Measurement per linear foot of depth of the precast concrete and based on the diameter of the manhole. Payment will include all preparation work and material application per the manufacturer's recommendations, as specified on the Drawings:
   5. Inside Drop Inlet Pipe: Measurement per lineal foot measured from the lowest invert of the manhole to the invert of the pipe being served by the drop inlet. Payment shall be considered compensation in full for all work, including PVC C900 drop pipe, PVC C900 Tee (modified), PVC C900 90 degree bend, pipe brackets and poured in place invert & benches.
   6. Air Release Manhole: Measurement per lineal foot of depth from final rim elevation to lowest invert elevation based on the diameter of the manhole. Payment will include the manhole, manhole frame, casting, fittings, air release valve, pipe supports, and all other items required to complete the installation as specified.
   7. All other Work and costs of this Section shall be incidental to the Project and included in the Total Base Bid.


© 2026 City of Cottage Grove, Minnesota

1.03 REFERENCES

A. American Society of Testing and Materials (ASTM):
   1. C150 - Specification for Portland Cement.
   2. C443 - Specification for Joints for concrete Pipe and Manholes, Using Rubber Gaskets.
   3. C478 - Specification for Precast Reinforced Concrete Manhole Sections.
   4. C877 - Specification for External Sealing Bands for Concrete Pipe, Manholes, and Precast Box Sections.
   5. C923 - Specification for Resilient Connectors Between Reinforced Concrete Manhole Structures, Pipes and Laterals.

1.04 SITE CONDITIONS

A. Manhole locations are shown on the Drawings in a general way. Anticipate minor variations in both horizontal and vertical directions in locating existing system.

1.05 SUBMITTALS

A. Submit Product Data for the following items consistent with Section 01 33 00:
   1. Gaskets.
   2. Joint sealants.
   3. Manufacturers recommended installation procedures for jointing.
   4. Manhole spray lining materials.

B. Submit shop drawings for the following items consistent with Section 01 33 00:
   1. Manholes, including reinforcing, joints, pipe connections, and castings.
   2. Shop drawings shall indicate complete information for fabrication and installation of units. Include the following:
      a. Plans and elevations locating and defining all material furnished by manufacturers.
      b. Sections and details showing connections, cast-in items, field installed lifting devices, capacities, all openings, and their relation to the structure.

C. Submit Manufacturer’s Certificate of Compliance for the following items consistent with Section 01 33 00:
   1. Castings.
   2. Precast manhole sections and steps.

D. Manhole/Catch Basin Elevation Report:
   1. Complete the report attached to the end of this Section for each structure as it is constructed. The completed report shall be submitted each week to the Engineer or the Engineer's designated representative at some mutually agreeable time.

E. Inside Drop Inlet Pipe per Standard Detail Plate SAN-4.

1.06 QUALITY ASSURANCE

A. The quality of all materials, the process of manufacture, and the finished sections shall be subject to inspection and approval by the Engineer or other representative of the Owner. Such inspection may be made at the place of manufacture or on the Work after delivery, or at


© 2026 City of Cottage Grove, Minnesota

both places and the materials shall be subject to rejection at any time on account of failure to meet any of the requirements specified herein. Material rejected after delivery to the Site shall be marked for identification and shall be removed from the Site at once. All materials which have been damaged after delivery will be rejected and if already installed shall be removed and replaced entirely at the Contractor's expense.

B. At the time of inspection, the materials will be carefully examined for compliance with the appropriate ASTM Standard and this Section and with the approved manufacturer's drawings. All precast manhole sections shall be inspected for general appearance, dimension, "scratch-strength," blisters, cracks, roughness, soundness, etc. The surface shall be dense and close-textured.

C. Manhole Design:
   1. Have the manhole sections and top and bottom slabs designed and the detailed drawings prepared by a Professional Engineer, experienced in precast concrete manhole design, who is registered in the Project's state.

## PART 2 PRODUCTS

### 2.01 COMPONENTS

A. Manholes:
   1. Precast concrete sections conforming to ASTM C478 and this Section. No lift holes permitted. No structures constructed either partially or completely from segmental block will be accepted:
      a. All sections shall be cured by an approved method and shall not be shipped nor subjected to loading until the concrete compressive strength has attained 4,000 psi and not before 2 days after fabrication and/or repair, whichever is longer.
      b. The date of manufacture and the name and trademark of the manufacture shall be clearly marked on the inside of each precast section.
      c. Precast inverts to match pipe size and pipe grade through manhole (with flat grades, manhole inverts will not be allowed to have a 0.10 foot drop).
      d. No structures with any cracks greater than 0.01 inch in width will be accepted.
   2. Height of the precast eccentric cone section shall be either 36 inch, 42 inch, or 48 inch in height.
   3. Joints: Rubber gasketed joint forming a watertight seal conforming to ASTM C443.
   4. Size: Inside diameter as indicated on the Drawings.
   5. Water Tight Pipe Connections:
      a. All manholes shall be fabricated with pipe openings consisting of a rubber boot and stainless steel band in accordance with ASTM C923 to seal off the joint from allowing dirt, ground water, or other objectionable material from entering. These materials shall be installed with the fabrication on all new manholes.
   6. Inside Drop Manhole:
      a. Drop pipe mounting brackets shall be Reliner Stainless Adjustable Pipe Brackets or approved equal, minimum 2 inch width.
      b. Stainless steel hardware.
      c. Mortar is allowed for upper doghouse in place of rubber boot when booted connections are not available due to outside diameter of pipe fitting used for drop pipe connection.


© 2026 City of Cottage Grove, Minnesota

d. Drop pipe per section 33 31 00 2.01.C.
e. Drop Tee shall be PVC C905 non-pressure tee. GPK non-stock, 8 inch Tee extension x G x G, or approved equal.
f. 90 Degree Base Bend shall be PVC C905 non-pressure bend. GPK Y24-008 90 EL S x G, or approved equal.
g. Inverts and benches are to be poured in the field and include the 90 degree bend.

7. Transitions sections: when required the maximum depth from the rim elevation to the top of the reducing cone is 10 feet.
8. Air Release Manhole:
   a. Adjustable pipe supports: 316 Stainless Steel Spider Pipe Support Model SPSS, Empire 428KTSX
      1) Stainless Steel anchor bolt or self drilling concrete anchor with stud and two nuts each.
   b. Air release Valve: 2" H-TEC Model 986 Pressure Air Release/Vacuum Valve or equal.
   c. Joint Wrap: 9 inch wide Gator Wrap by Infi-Shield or equal:
      1) Ethylene Propylene Diene Monomer EDPM meeting ASTM C877 Type III and C923

B. Steps: Reinforced polypropylene plastic steps with No. 2 deformed grade steel rod.

C. Structure Bases:
1. Precast integral with bottom section of manhole for all structures 8 foot inside diameter and smaller. All structures supplied smaller than 8 foot inside diameter shall also have precast inverts installed.
2. For structures with inside diameters greater than 8 feet, the structure base slab and manhole sections may be separate precast units. A field constructed invert will be required when base slab and bottom manhole section are not integral.

D. Castings: See Section 33 05 18.

2.02 ACCESSORIES

A. Concrete Materials:
1. Standard Portland Cement Type I, II, or IL, clean washed sand, crushed rock, and gravel free from deleterious materials for monolithic concrete manholes and all manhole bases.
2. Portland Cement: Comply with the requirements of ASTM C150 or C595.
3. Design Mix: Subject to the approval of the Engineer. Use proper water-cement ratio to obtain 4,000 psi in 28 days.

B. Mortar: Pre-mix bag intended for underground use conforming to ASTM C270 Type M, minimum compressive strength of 2,500 psi.

C. Joint Sealants:
1. Ramnek, or approved equal.
2. Open cell polyurethane foam sealant, DOW 999, or approved equal.

D. Adjusting Rings: Conform to Section 33 05 18.


© 2026 City of Cottage Grove, Minnesota

2.03 SPRAY LINER

A. Hydrogen sulfide and corrosion resistant liner such as Zebron or approved equal.

B. Polyurethane Coatings: High Performance, 2-part, 100 percent solids polyurethane coating, Zebron series, No.386.
   1. Physical Properties:
      a. Color: Cream
      b. Specific Gravity (ASTM D792): 1.3 (10.84 lbs per gal)
      c. Tensile Strength (ASTM D638): 2500 psi at 77 degrees F (25 degrees C)
      d. Elongation (ASTM D638): Recoverable; 67 percent at 77 degrees F (25 degrees C)
      e. Flexibility (ASTM D792): No effect bending 0.5 mm plate coated with 20 mils over 8 mm diameter mandrel.
      f. Compressibility (ASTM G95): 4200 psi
      g. Surface Hardness: 60 to 70, Shore “D”
      h. Abrasion Resistance (ASTM D4060): 2.12 oz. (60 mg)
      i. Thermal Conductivity (ASTM C177): 0.000723 cal. Per sec. cm2 per degree C per cm at 20 degrees C (0.175 btu per hr. ft. degree F per ft. at 77 degrees F)
      j. Permeability (ASTM E96): 0.262 gms per m2 per 24-hrs; 0.0358 U.S. perms.

**PART 3 EXECUTION**

3.01 TRANSPORTATION

A. Transport precast units by rail or truck in a manner to avoid excessive stress or strain on units.

B. Support units during hauling and stockpiling with sufficient hardwood shores to prevent cracking and spalling. Secure units in place to prevent shifting or undesired movements. Location of temporary supports shall be as directed by precast manufacturer.

3.02 MANHOLE INSTALLATION

A. Excavation and Preparation of Trench: Conform to Section 33 05 06.

B. Furnish and install structures in accordance with Standard Detail Plates as shown on the Drawings.

C. Place precast integral base section on compacted subgrade and bedding for structures 6 feet diameter and smaller.

D. Set precast concrete sections plumb with a 1/2 inch (per 4 foot precast section) maximum out of plumb tolerance allowed.
   1. Initial base section shall be set plumb with a 1/4 inch (per 4 foot precast section) maximum out of plumb tolerance allowed.

E. Install short precast section (maximum 12 - 24 inch height) immediately below the eccentric cone or precast top slab.

F. Position vertical wall of the eccentric cone on the downstream side.


© 2026 City of Cottage Grove, Minnesota

G. Casting Adjustment:
   1. Conform to Section 33 05 18.
   2. Seal joint at the casting frame seat with 2 rows of joint sealer.

H. Steps:
   1. Set the centerline of each step within each manhole to be within 2 inches of the vertical centerline for the group of steps.
   2. Locate over downstream pipe, except for pipe 24 inches in diameter or greater. Then place where most appropriate to provide the most suitable access.
   3. Offset step centerline from drop openings.
   4. Install top step at a maximum of 20 inches below top of casting.
   5. Secure and neatly mortar in place 12 - 16 inches on center spacing.

I. Prevent entrance of dirt and debris from all new and existing manholes.

J. Pipe Connections:
   1. All pipes entering the manhole must be cut with a power saw to provide a clean, smooth pipe surface. The pipe shall be cut to be 2 inches inside the manhole at the pipe's midpoint.
   2. Annular space between the outside of the pipe and opening in the structure shall be filled with mortar on the interior and exterior of the structure. Construct an interior collar/doghouse around the pipe from the wall of the structure to the end of the pipe with mortar.

K. Inside Drop manhole inlets shall be constructed in accordance with Standard Detail Plate SAN-4 shown on the Drawings.

L. Air Release Manhole
   1. Install pipe support with a minimum 1 inch space between base slab and stainless steel plate.
   2. In addition to gasketed joints install Gator Wrap around outside of structure joints.
   3. Construct 12 inch by 12 inch sump through precast base floor with 1-1/2 inch clear rock drain field extending 3' below base slab for structures above groundwater level:
      a. Refer to drawings for dewatering system on structures constructed with base slab bottom within 3 feet of groundwater level.

M. Construct Manhole Over Existing Pipe:
   1. Construct manhole over existing pipe at locations shown on the Drawings.
   2. Saw cut existing pipe to fit flush with inside wall of new structure.
   3. Seal any openings in manhole.

N. Spray Liner
   1. Apply spray lining material per manufacturer's recommendations and specifications.
   2. Apply to all drop manholes, manholes receiving force main, and all other structures as identified in the drawings.


© 2026 City of Cottage Grove, Minnesota

3.03 FIELD QUALITY CONTROL

A. Failure of any mortar work within a structure (i.e. invert, doghouse, etc.) that occurs during the correction period will be repaired in a manner acceptable to the Owner at the Contractor's expense.

B. Any leak of a precast manhole section joint shall be repaired by chemical injection or other approved material to the satisfaction of the Engineer.

C. Any structure section with a crack found to be greater than 0.01 inch in width, as measured by use of a feeler gauge, shall be replaced or acceptably repaired with a method as approved by Engineer.

3.04 PROTECTION

A. Secure manholes and structures immediately after completion or before suspension of operations at the end of working day with casting or suitable alternative device.

B. Mark structure susceptible to being hit by construction or vehicular traffic.

3.05 CLEANING

A. All new manholes shall be thoroughly cleaned of all silt, debris, and foreign matter of any kind prior to final inspection.

**END OF SECTION**


© 2026 City of Cottage Grove, Minnesota

**Manhole/Catch Basin Field Elevation Report**

| | |
|---|---|
| Project Name: | Date: |
| Owner: | Owner Project No: |
| Bolton & Menk Project Rep: | Bolton & Menk Project No: |
| Contractor: | Contractor's Rep: |

**Contractor is required to complete this form before payment of structure is approved.**

| Structure Location | | | | Structure Type (circle one) | Design Invert (from Plan) | As-Constructed Invert Elevation * | Difference ( + / - ) | Comments / Quality Assurance |
|---|---|---|---|---|---|---|---|---|
| Structure No. | Structure Station | Direction of invert/flow | Street Name or Easement Location | | | | | |
| | | | | MH CB Apron | | | | |
| | | | | MH CB Apron | | | | |
| | | | | MH CB Apron | | | | |
| | | | | MH CB Apron | | | | |
| | | | | MH CB Apron | | | | |
| | | | | MH CB Apron | | | | |
| | | | | MH CB Apron | | | | |
| | | | | MH CB Apron | | | | |
| | | | | MH CB Apron | | | | |

*** - As-Constructed Invert Elevation provided by Contractor from measurements taken in the field to nearest 0.01'.**


© 2026 City of Cottage Grove, Minnesota

# SECTION 33 40 00

# STORMWATER UTILITIES

## PART 1 GENERAL

### 1.01 SUMMARY

A. Section Includes:
   1. Storm sewer pipe, manholes, catch basins, fittings, and miscellaneous appurtenances.

B. Related Sections:
   1. Section 01 31 00 - Project Management and Coordination.
   2. Section 01 33 00 - Submittal Procedures.
   3. Section 01 57 13 - Temporary Erosion and Sediment Control.
   4. Section 32 11 23 - Aggregate Base Courses.
   5. Section 32 16 13 - Concrete Curbs and Gutters.
   6. Section 33 05 06 - Trenching and Backfilling.
   7. Section 33 05 18 - Adjust Miscellaneous Structures.

### 1.02 PRICE AND PAYMENT PROCEDURES

A. Measurement and Payment:
   1. Storm Sewer Pipe: Measurement per linear foot for each size, type, and class of pipe, furnished and installed complete in place as specified, regardless of depth, including excavation, backfilling, and compaction. Pipe will be measured from centerline of structure to centerline of structure and will not include end sections:
      a. Pipe bedding will be paid in accordance with Section 33 05 06.
      b. Improved pipe foundation material, if necessary, shall be per Section 33 05 06.
   2. Catch Basin, Catch Basin Manhole, Skimmer, and Manhole Structure: Measurement per linear foot of depth from final rim elevation to lowest pipe invert elevation or bottom of sump according to type and size for furnishing and installing structures complete in place as specified, including casting frame and cover, mortar invert (if required) and concrete stool grate frame (if required per detail).
      a. 70-percent partial payment will be made upon installation and 30-percent payment will be made upon final completion of doghouses and inverts and submittal of Manhole/Catch Basin Elevation Report.
   3. Flared Ends with trash guard: Measurement per each by size installed, according to type, at locations indicated in the Drawings complete in place as specified, including excavation, backfilling, compaction and trash guard:
      a. Where a sewer line is terminated with a flared end section, tying the last 3 joints per Standard Detail Plate STO-11 is considered incidental to the installation of the pipe.
   4. Random Riprap: Measurement based upon units of cubic yards of Riprap placed, according to class. Payment of the Bid Item shall include geotextile fabric as required per Standard Detail Plate STO-12.
   5. Grouted Riprap: Measurement based upon units of cubic yards of riprap placed, according to class. Payment of the Bid Item shall include geotextile fabric and 6 inch concrete layer as required per Standard Detail Plate STO-13.


© 2026 City of Cottage Grove, Minnesota

6. Connect to Existing Pipe: Measurement per each connection made, according to size and type of existing pipe, and regardless of type of existing bulkhead or plug, or type of connection made. Payment will include all costs related to making the connection, including removal and disposal of the existing bulkhead or plug, and construction of concrete collar if necessary.
7. Connect Existing Pipe to New Structure: Measurement per each pipe connected to the new structure, regardless of size of existing pipe. Payment will include all costs related to making the connection, including removal and replacement of existing pipe as directed by Engineer.
8. Connect to Existing Structure: Measurement shall be per each connection made, regardless of size of opening, type of existing bulkhead, or type of existing structure. Saw cutting of the pipe installed in the opening if necessary shall be considered incidental. Core cutting the connection and reconstruction of existing structure invert if necessary shall also be considered incidental to the connection.
9. RC LR Bend: Measurement per each, according to size and class. Payment will include all costs related to furnishing and installing the bend, including excavation, backfilling, and compaction.
10. Bulkhead Storm Sewer Pipe: Measurement per each bulkhead installed according to size. Payment will include all costs related to bulkheading or plugging the pipe as described in this Section.
11. Poured-In-Place Concrete Seepage Collar: Measurement per each collar constructed according to size of pipe it is constructed around. Payment at the Unit Price shall include all costs related to constructing the collar in accordance with Standard Detail Plate STO-21, including excavation, forms, and material.
12. Construct Manhole Over Existing Pipe: Measurement per linear foot of depth from final rim elevation to lowest invert elevation according to size. Payment will include the cost of the manhole and installation over the existing line, casting frame and cover, and adjusting rings in place as specified.
13. Outlet Structure: Measurement per each according to size and type. Payment will include all costs related to furnishing and installing the structure complete in place as specified, including casting frame and cover and grate.
14. Overflow Structure: Measurement per each according to size and type. Payment will include all costs related to furnishing and installing structures complete in place as specified, including casting frame and cover and grate.
15. Clean Sump: Measurement per each. Payment will include all costs to remove any water and dirt within the structure. This Bid Item is intended for vacuum cleaning of sump manholes to allow inspection by the Owner or Engineer.
16. Televise Storm Sewer: Measurement based upon units of linear feet of pipe televised, regardless of size or type. Pipe will be measured from centerline of structure to centerline of structure. Payment will be compensation for pipe preparation, televising, providing televising report, and all other associated costs.
17. All other Work and costs of this Section shall be incidental to the Project and included in the Total Base Bid.

## 1.03 REFERENCES

A. American Society of Testing and Materials (ASTM):
   1. A153 - Specification for Zinc Coating (Hot-Dip) on Iron and Steel Hardware.
   2. C76 - Specification for Reinforced Concrete Culvert, Drain, and Sewer Pipe.


© 2026 City of Cottage Grove, Minnesota

3. C139 - Specification for Concrete Masonry Units for Construction of Catch Basins and Manholes.
4. C150 - Specification for Portland Cement.
5. C206 - Specification for Finishing Hydrated Lime.
6. C361 - Specification for Reinforced Concrete Low Head Pressure Pipe.
7. C443 - Specification for Joints for Circular Concrete Sewer and Pipe, Using Rubber Gaskets.
8. C478 - Specification for Precast Reinforced Concrete Manhole Sections.
9. C595 - Specification for Type 1L Cement.
10. C1479 - Standard Practice for the Installation of Precast Concrete Sewer, Storm Drain, and Culvert Pipe Using Standard Installations.
11. C1619 - Standard Specification for Elastomeric Seals for Joining Concrete Structures.
12. F477 - Specifications for Elastomeric Seals (Gaskets) For Joining Plastic Pipe.
13. F2881 - Specifications for 12 to 60 inch Polypropylene Corrugated Dual Wall Pipe and Fittings for Non-Pressure Storm Sewer Applications.

B. Minnesota Department of Transportation "Standard Specifications for Construction", 2025 (MnDOT Spec.):
1. 2461 - Structural Concrete.
2. 2511 - Riprap.
3. 3601 - Riprap Material.
4. 3733 - Geosynthetic Materials.

C. National Association of Sewer Service Companies (NASSCO):
1. PACP - Pipeline Assessment Certification Program.

D. American Association of State Highway and Transportation Officials (AASHTO):
1. M330 - Specification for Polypropylene Pipe 12 to 60 inch Diameter.

1.04 SEQUENCING AND SCHEDULING

A. Maintain existing storm sewer flows during construction. This may require a temporary pipe connection during periods of time when construction is not occurring.

B. Set up traffic control prior to removals. Maintain traffic during storm sewer improvements unless otherwise approved by Owner.

C. Do not pursue work-causing shut off of utility service (gas, water, electric, telephone, TV, etc.) to consumers until the utility owner is contacted and all consumers are notified of the shut-off schedule.

D. Successfully complete required inspections and tests before commencement of Section 32 11 23 and Section 32 16 13.

E. Coordinate inspection of completed sump structures with City prior to acceptance. May require pumping water and vacuuming dirt out of structure prior to inspection.

F. Televise Storm Sewer:
1. Notify Engineer 48 hours in advance of the televising of all pipes.
2. Complete all required mandrel and air testing prior to televising.


© 2026 City of Cottage Grove, Minnesota

3. All private utilities shall be installed by others prior to televising storm sewer.
4. Start televising no sooner than 30 days, but no later than 60 days after all utility, excavation, and street subgrade work is completed as part of this contract.

1.05 SUBMITTALS

A. Submit Shop Drawings for storm sewer structures consistent with Section 01 33 00.

B. Shop drawings shall indicate complete information for fabrication and installation of units. Include the following:
   1. Plans and elevations locating and defining all material furnished by manufacturers.
   2. Sections and details showing connections, cast-in items, and field installed lifting devices, capacities, all openings, and their relation to the structure.

C. Submit Manufacturer's Certificate of Compliance for the following items:
   1. Gray iron castings.
   2. Precast manhole sections.
   3. Rip rap.
   4. Pipe.

D. Manhole/Catch Basin Elevation Report:
   1. Complete the report attached to the end of this Section for each structure as it is constructed. Submit complete report each week to the Engineer or the Engineer's designated representative at some mutually agreeable time.

E. Televising Report:
   1. Submit 1 copy of the Written Report and Video Report within 30 days of completion of televising.
   2. Report Requirements:
      a. Each run shall consist of a starting and ending structure number and a zero reading on the counter at center of the starting structure.
      b. Examine each service wye by using the pan and tilt feature.
      c. Location, length and identify sags within the flowline of the pipe of 10% or greater, example 0.06 foot for an 8 inch diameter pipe.
      d. Location in change in pipe material to be noted.
      e. The video camera operator shall type into the video the station (distance), wye location on either the left or right side of the pipe, and any problems they notice while televising the sewer lines.
      f. Take a still photograph at any questionable joint or possible defect.
   3. Provide a Written Report with a graphic cross section of the pipe showing the manholes, all wye connections, and defects. This report shall include PACP codes and descriptions.
   4. Submit a Video Report in a DVD format with audio, including a printable version of the Written Report and full video of all televised pipe runs.


© 2026 City of Cottage Grove, Minnesota

## PART 2 PRODUCTS

2.01 MATERIALS

A. Ready Mix Mortar Materials:
   1. Sand Mix, 4,000 PSI

B. Mortar: Pre-mix bag intended for underground use conforming to ASTM C270 Type M, minimum compressive strength of 2,500 psi.

2.02 STORM MANHOLE AND CATCH BASIN FRAMES AND COVERS

A. Conform to Section 33 05 18.

2.03 STORM MANHOLES AND CATCH BASINS

A. Precast Concrete Sections conforming to ASTM C478 and this section.
   1. No structure or any portion thereof will be allowed to be constructed of segmental block.
      a. Shallow structures that cannot be constructed in the standard manner shall be fabricated in a precast design similar to Standard Detail Plate STO-10.
   2. Preformed inverts are not allowed.
   3. Structures with any cracks greater than 0.01 inch in width will not be accepted.
   4. All sections shall be cured by an approved method and shall not be shipped nor subjected to loading until the concrete compressive strength has attained 4,000 psi and not before 2 days after fabrication and/or repair, whichever is longer.
   5. The date of the manufacture and the name and trademark of the manufacture shall be clearly marked on the inside of each precast section.

B. Diameter and special requirements are shown on the Drawings.

C. Manhole Joints: Rubber gasketed joint forming a watertight seal conforming to ASTM C443.

D. Manhole Steps: Reinforced polypropylene plastic steps with No. 2 deformed grade steel rod.

E. Design:
   1. Have the manhole sections and top and bottom slabs designed and the detailed drawings prepared by a Professional Engineer, experienced in precast concrete manhole design, who is registered in the Project's state.

2.04 PIPE MATERIALS

A. Reinforced Concrete Pipe (RCP) and Fittings:
   1. General Requirement: ASTM C76.
   2. Materials: Conform to the requirements of ASTM C76. Profile gaskets shall be synthetic rubber and shall conform to MnDOT Plate 3006.
   3. Pipe Joints: Bell shall conform to MnDOT Plate 3006.
   4. Pipe Class: As shown on the Drawings.


© 2026 City of Cottage Grove, Minnesota

5. Marking: Each pipe shall be identified with the name of the manufacturer trade name or trademark and code, identification of plant, date of manufacture, and the pipe class and specification design.
6. Pipes with cracks greater than 0.01 inch in width will not be accepted.

B. Corrugated Polypropylene Pipe (PP), dual wall:
1. Pipe shall have a smooth interior and annular exterior corrugations meeting ASTM D2881 and AASHTO M330.
2. Pipe joint shall be a gasketed integral bell & spigot. Bell and spigot connections shall utilize a spun-on, welded or integral bell and spigot with gaskets meeting ASTM F477.
3. Fittings shall conform to ASTM F2881 and AASHTO M330.
4. Material properties, Polypropylene compound for pipe and fittings shall be impact modified copolymer meeting material requirements ASTM F2881 Section 5 and AASHTO M330, Section 6.1.

2.05 TRASH GUARDS

A. General Requirement: ASTM A153.

B. Materials: Galvanized steel rods meeting the requirements in ASTM A153.

C. Bar size and configuration as shown on the Drawings.

D. Securely attached to end section.

2.06 PIPE TIE RODS

A. HAALA Industries, Inc, or approved equal.
1. Washington County Tie Rod.
2. Standoff Culvert Tie.
3. Hot Dip Galvanized.

2.07 RIPRAP

A. General Requirement: Conform to MnDOT Spec. 2511:
1. Riprap Material: Conform to MnDOT Spec. 3601.2.A and 3601.2.B.
2. Granular Filter: Conform to MnDOT Spec. 3601.2.D and 3601.2.E.
3. Geotextiles: Conform to MnDOT Spec. 3733, Type 4.
4. Concrete: Conform to MnDOT Spec. 2461.

2.08 CONCRETE STOOL GRATE FRAME FOR OFF STREET CATCH BASIN

A. General Requirement: Conform to Standard Detail Plate STO-9.


© 2026 City of Cottage Grove, Minnesota

## PART 3 EXECUTION

3.01 GENERAL

A. Locating of public utilities within the project limits in accordance with section 01 31 00 Project Management and Coordination shall be incidental to the project and included in the Total Base Bid.

3.02 PREPARATION

A. Trench Excavation and Backfill shall conform to Section 33 05 06.

3.03 EXAMINATION

A. Perform televising pipeline inspections in accordance with NASSCO Pipeline Assessment and Certification Program (PACP). When requested, provide the required certification for personnel performing the actual work.

B. Commence test procedures only when pipe and structures are clean and free of dirt, water, or other foreign matter. Pipe cleaning shall be performed in accordance with NASSCO Jetter Code of Practice.

3.04 INSTALLATION

A. Connect to Existing Structure:
   1. Connect to existing structure at location shown on the Drawings.
   2. Core the hole in the structure and saw cut the pipe 2 inches inside the manhole at the pipe's midpoint.
   3. Bulkhead void between outside wall of pipe and edge of opening with mortar and block/brick.
   4. Reconstruct manhole bench/invert.

B. Connect Existing Pipe to New Structure:
   1. Where an existing structure is removed and replaced with a new structure, connect all existing pipes to the new structure.
   2. Remove pipe segments that are damaged during the structure replacement with new pipes of the same size and type, or as directed by Engineer.
   3. Saw cut existing or new pipes 2 inches inside the manhole wall at the pipe's springline.
   4. Bulkhead void between outside wall of pipe and edge of opening with mortar and block/brick.

C. Connect to End of Existing Pipe:
   1. Connect to existing pipe at locations shown on the Drawings.
   2. Locate and expose end of existing pipe.
   3. Remove existing bulkhead or plug and dispose of off Site:
      a. Take care not to damage existing pipe.
      b. Any segment of pipe damaged by Contractor shall be replaced with new materials at no expense to the Project.
   4. Utilize standard bell and spigot joint with rubber profile gasket if possible.


© 2026 City of Cottage Grove, Minnesota

5. If butt connection must be made to existing pipe, construct concrete collar around joint. Collar shall be minimum 12 inches thick in all locations and shall extend a minimum of 12 inches each way of the joint.

D. Pipe Installation:
   1. Lay and maintain pipe appurtenances to the alignment, grade, and location shown on the Drawings and/or staked in the field. No deviation from the Drawing and/or staked alignment, grade, or location is allowed, unless approved by Engineer. Deviation from grade in excess of 0.05 percent (with no intermediate high points, level sections, or reverse invert slope) may be cause for removal and relaying pipe at the Contractor's expense.
   2. General Pipe Installation Procedures:
      a. Wipe joints clean; apply the manufacturer's recommended lubricant compound over the entire joint surface; center spigot in bell and push spigot home; take care to prevent dirt from entering the joint space; bring pipe to proper line and grade, and secure pipe in place by properly bedding.
   3. Lay pipe upgrade with spigot ends pointing in the direction of flow.
   4. All joints must have a watertight seal conforming to ASTM C443.
   5. Remove all foreign matter or dirt from inside the pipe. Keep the bell and spigot clean during and after installation. Take care to prevent dirt from entering the joint space. Remove any superfluous material from inside the pipe after pipe installation by means of an approved follower or scraper.
   6. Where cut-ins make it impossible to construct bell and spigot joints or when dissimilar pipe materials are joined, a reinforced concrete collar shall be placed completely surrounding the joint or the connection shall be made by using an approved adapter.
   7. Any pipe which has been disturbed after being laid must be taken up, the joint cleaned and properly re-laid as directed by the Engineer.
   8. Trash guards required on upstream and downstream pipes, regardless of pipe size.
   9. Where a sewer line outlets to grade or where the line is terminated with a flared end section:
      a. Fasten the last 3 joints together using 2 bolt fasteners (tie rods) per joint approved and installed on outside of the pipe, regardless of pipe size.
      b. Tie rods shall be Washington County Tie Rod.
   10. The entire pipe run (structure to structure) that is connected to a flared end section, skimmer structure, or outlet structure shall be reinforced concrete pipe.
   11. Corrugated PP requires a minimum of 3-ft of temporary cover (compacted backfill) for construction traffic.

E. Structures and Appurtenances Installation:
   1. Furnish and install structures in accordance with the Drawings.
   2. Excavate to depth and size as shown in the Drawings.
   3. Structure inverts:
      a. Construct inverts of manholes and catch basins using a Ready Mix mortar material.
      b. Construct inverts shaped to the half section of equivalent size pipe conforming to the inlet and outlet pipe so as to allow for a free, uninterrupted flow with all surfaces sloping to the flow line.
   4. Concrete pipes entering manholes:
      a. End of pipes must be cut with a concrete saw.
      b. Annular space between the outside of the pipe and opening in the structure shall be filled with mortar on the interior and exterior of the structure. Construct an interior


© 2026 City of Cottage Grove, Minnesota

collar/doghouse around the pipe from the wall of the structure to the end of the pipe with mortar.

1) Corrugated Polypropylene Pipes shall have watertight gasket installed prior to filling annular space with mortar.

5. Steps:
   a. Locate on the downstream side, except for pipe 24 inches in diameter or greater. Install in the most appropriate place, to provide suitable access.
   b. Secure and neatly mortar in place 12 - 16 inches on center spacing.
6. Position vertical wall of the eccentric cone on the downstream side.
7. On structures with a build that contains more than 1 barrel section, the section immediately below the precast top slab shall be maximum 24 inch height.
8. Lift holes shall be neatly mortared up.
9. Remove all debris from Structures, invert and benches prior to final inspection and acceptance.
10. Remove all water and debris from Sump Manhole Structures, to allow for final inspection and acceptance.
11. Install Adjustment Rings and Adjust Casting: Conforming to Section 33 05 18.

F. Construct Manhole Over Existing Pipe:
   1. Construct manhole over existing pipe at locations shown on the Drawings.
   2. Saw cut existing pipe to fit flush with inside wall of new structure.
   3. Seal any openings in manhole.

G. Riprap:
   1. General: Conform to MnDOT Spec. 2511.
   2. Install Riprap per Standard Detail Plates STO-12 and STO-13 prior to placement of flared end section.
   3. Place 6 inch thick layer of concrete at the midpoint of the Riprap per Detail Plate STO-13.

H. Bulkhead Pipe:
   1. Bulkhead pipe at locations shown on Drawings with brick, mortar, or concrete block masonry 8 inches thick.
   2. Precast concrete plugs may be used in lieu of bulkhead. Plug must fit snugly into pipe opening and be watertight.

I. Seepage Collar:
   1. Construct at location indicated on Drawings.
   2. Construct per Standard Detail Plate STO-21.

J. Concrete Stool Grate Frame:
   1. Construct on off street catch basins as shown on the plans or as directed by Engineer.
   2. Construct per Standard Detail Plate STO-9.

K. Storm Structure Location Marker:
   1. Off street structures shall be marked permanently with the specified sign and sign post as indicated on the plans.
   2. Install sign in accordance with Section 34 41 05.


© 2026 City of Cottage Grove, Minnesota

## 3.05 FIELD QUALITY CONTROL

A. Scope:
   1. All pipeline testing is considered incidental to the Bid cost of the pipe.
   2. Engineer to observe and verify that all tests and visual inspections have been completed prior to final acceptance.

B. Cleaning:
   1. Consists of Cleaning the Pipe and Structures:
      a. If newly installed mains and structures are kept clean during construction, cleaning will not be required.
      b. If newly installed mains and/or structures become dirty due to negligence of the Contractor, cleaning will be performed at the sole expense of the Contractor.
   2. The bailing or flushing method of cleaning pipe is acceptable only if adequate provisions acceptable to the Engineer for keeping dirt and debris out of the existing sewer system or ponds are employed. Jetting may be required.
   3. Complete prior to final inspection for acceptance.

C. Required Tests and Inspections:
   1. Infiltration:
      a. To determine the amount of ground water infiltration into the sewers.
      b. Test waived if no visible infiltration is observed during the televising inspection.
      c. Measurement made by means of 90 degree v-notch weirs placed in the lines as directed by the Engineer.
      d. Measurements taken at the points where in the Engineer's opinion the flow of water in the sewer is greater than the maximum allowable leakage.
      e. Maximum Allowable Rate of Leakage: Not more than 100 gallons per mile per inch diameter per day.
      f. Tests may be taken between individual manholes and the infiltration in any given line must not exceed the specified maximum allowable rate.
      g. Method of Measurement: Measurement of time for a predetermined volume of flow to occur.
   2. Lamping will be performed by Engineer to:
      a. Verify installation is to true line and grade.
      b. Verify structures conform to specified requirements.
   3. Trench Backfill Compaction:
      a. The Owner shall have an independent testing laboratory perform, as minimum, the following tests. The location of the tests shall be determined by the Engineer:
         1) 1 density test for every 300 feet of trench at varying depths (per each 10 foot depth increment).
   4. Alignment:
      a. Horizontal deviation in excess of 3 inches from back of curb to back of structure opening (for casting and rings) is not allowed. Deviation in excess of 3 inches will be cause for reinstallation of structure at the Contractor's expense.
      b. The vertical and horizontal alignment of the casting adjustment shall be approved by the Engineer prior to constructing the 10 foot concrete curb and gutter transition on either side of the casting.


© 2026 City of Cottage Grove, Minnesota

5. Deflection testing for Corrugated PP shall be in accordance with Spec. Section 33 08 30, paragraph 3.02.E Gravity Pipe Deflection Testing.

D. Any structure section with a crack found to be greater than 0.01 inch in width, as measured by use of a feeler gauge, shall be replaced or acceptably repaired with a method as approved by Engineer.

3.06 STORM SEWER CLOSED CIRCUIT TELEVISION INSPECTION

A. Televising:
   1. Newly installed storm sewer segments must be in a clean and ready condition prior to the television inspection.
   2. Immediately clean any lines found to be dirty prior to televising. Costs for all such cleaning shall be the responsibility of the Contractor.
   3. Provide sufficient water to run through the new storm sewer system prior to televising lines to be able to distinguish any sags or alignment problems with the pipe.
   4. Personnel completing televising must be PACP certified.
   5. Final acceptance of the video report will require the pipe to be clean as a new pipe.
   6. Provide video and report to Owner.
   7. Provide a camera that will be self-propelled and will have the ability to tilt up and down and pan left and right. The camera must provide color images.
   8. Pan and zoom in to any potential deficiencies for evaluation.
      a. Measure any cracks greater than 0.01 inch in width: Provide documentation to support method of measurement used and documentation of measurements. Method must be approved by Engineer prior to measuring.
         1) Pipe 36 inches in diameter and greater – feeler gauge measurements required.
         2) Pipe less than 36 inches in diameter:
            a) Laser pipe profiling.
            b) Feeler gauge measurements.
            c) Other method as approved by Engineer.
   9. Speed shall not exceed 30 feet per minute.

B. Defects:
   1. Immediately correct any defects, faulty joints, cracked pipe greater than 0.01 inches in width, or other deficiency noted by the television inspection.
      a. Any pipe defect, faulty joint, or crack greater than 0.01 inch in width, shall be replaced or acceptably repaired with a method as approved by Engineer depending on severity and location. Possible methods of repair include:
         1) Replacement of pipe.
         2) CIPP lining in accordance with section 33 01 38 CIPP Gravity.
   2. A plan for repair shall be presented to and approved by the Owner and Engineer prior to the repair occurring.
   3. Re-televise all corrected pipe runs after correction.
   4. Any costs associated with measuring defects, corrections, and re-televising of the sewer system will be paid by the Contractor.


© 2026 City of Cottage Grove, Minnesota

3.07 PROTECTION

A. Plug all entrances and openings to the system promptly and before suspension of operations at the end of working day.

B. Secure manholes and structures immediately after completion or before suspension of operations at the end of working day with castings or suitable alternative device.

C. Mark all structures to avoid being hit by construction or vehicular traffic.

D. Mark each plug location with 4 inches by 4 inches timbers to above grade to aid in marking the future connection.

E. Establish erosion control measures as per Section 01 57 13.

**END OF SECTION**


© 2026 City of Cottage Grove, Minnesota

**Manhole/Catch Basin Field Elevation Report**

| | |
|---|---|
| Project Name: | Date: |
| Owner: | Owner Project No: |
| Bolton & Menk Project Rep: | Bolton & Menk Project No: |
| Contractor: | Contractor's Rep: |

**Contractor is required to complete this form before payment of structure is approved.**

| Structure Location | | | | Structure Type (circle one) | Design Invert (from Plan) | As-Constructed Invert Elevation * | Difference ( + / - ) | Comments / Quality Assurance |
|---|---|---|---|---|---|---|---|---|
| Structure No. | Structure Station | Direction of invert/flow | Street Name or Easement Location | | | | | |
| | | | | MH CB Apron | | | | |
| | | | | MH CB Apron | | | | |
| | | | | MH CB Apron | | | | |
| | | | | MH CB Apron | | | | |
| | | | | MH CB Apron | | | | |
| | | | | MH CB Apron | | | | |
| | | | | MH CB Apron | | | | |
| | | | | MH CB Apron | | | | |
| | | | | MH CB Apron | | | | |

*** - As-Constructed Invert Elevation provided by Contractor from measurements taken in the field to nearest 0.01'**


© 2026 City of Cottage Grove, Minnesota

This Page Left Blank Intentionally

# SECTION 33 41 00

# SUBDRAINAGE

## PART 1 GENERAL

1.01 SUMMARY

A. Section Includes:
   1. Storm sewer service and drain tile.

B. Related Sections:
   1. Section 33 05 06 - Trenching and Backfilling.
   2. Section 33 31 14 - Sanitary Sewerage Services.

1.02 PRICE AND PAYMENT PROCEDURES

A. Measurement and Payment:
   1. Perforated PVC Drain Tile, SDR 26: This Bid Item shall be used for installation of Drain Tile for subgrade drainage within street areas. Measurement per linear foot, according to size, and with no regard to intervening fittings. Payment shall include all costs related to furnishing and installing the draintile pipe per Standard Detail Plate STO-14, including excavation, disposal of excess materials, geotextile fabric, aggregates, and fittings:
      a. It should be noted that due to the estimation required for Drawing preparation, the quantity of drain tile actually constructed may vary significantly from those given in the Bid Form.
      b. The Engineer reserves the right to increase or decrease the Drain Tile quantity, and associated Connect Drain Tile to Structure quantity, with no change to the Contract Unit Price. No additional compensation will be considered or allowed for changes to the estimated quantities or for the deletion of any of these Bid Items in their entirety.
   2. Connect Drain Tile to Existing Structure: Measurement per each. Payment will include all costs related to core drilling a hole in the storm sewer structure, making the connection, and patching as specified.
   3. Storm Sewer Service: Measurement by linear foot of pipe actually installed, according to size and type, as measured along the axis of the pipe with no regard to intervening fittings. Payment at the Unit Price shall be compensation in full for all work and costs, including excavation, pipe, fittings, backfill, and trench compaction:
      a. Connecting to an existing hole in a precast structure will be considered incidental to the installation of the service pipe.
      b. PVC plug for the end of the service is considered incidental.
   4. Pipe Bedding for the PVC Storm Sewer Service Pipe: Measurement and payment shall be as per Section 33 05 05.
   5. Supplying and installing required markers at service ends shall be considered incidental to the service installation.
   6. All other Work and costs of this Section shall be incidental to the Project and included in the Total Base Bid.


© 2026 City of Cottage Grove, Minnesota

1.03 REFERENCES

A. American Society of Testing and Materials (ASTM):
   1. D1784 - Specification for Rigid Poly (Vinyl Chloride) (PVC) Compounds and Chlorinated Poly (Vinyl Chloride) (PVC) Compounds.
   2. D3034 - Specification for Type PSM Poly (Vinyl Chloride) (PVC) Sewer Pipe and Fittings.
   3. D3212 - Specification for Joints for Drain and Sewer Plastic Pipes Using Flexible Elastomeric Seals.
   4. F477 - Specification for Elastomeric Seals (Gaskets) for Joining Plastic Pipe.

B. Minnesota Department of Transportation "Standard Specifications for Construction" 2025 Edition (MnDOT Spec.):
   1. 3149 - Granular Material.
   2. 3733 - Geosynthetic Materials.

1.04 SEQUENCING AND SCHEDULING

A. Install sanitary sewer, water main, storm sewer, and all pipe deeper than the services prior to the installation of the services.

B. Install draintile prior to gravel base placement.

**PART 2 PRODUCTS**

2.01 PIPE AND FITTINGS

A. Drain Tile: PSM Poly (Vinyl Chloride) (PVC) Plastic Pipe and Fittings:
   1. General: Pipe and fittings shall be made of compounds conforming to ASTM D1784 in accordance with the material requirements of ASTM D3034.
   2. Design: Integral bell gasketed joint and a minimum wall thickness conforming to SDR 26.
   3. Joints: Elastomeric gasket joints providing a water-tight seal conforming to ASTM D3212 or ASTM F477.
   4. Perforations: Circular on 3-1/4 inches by 6-1/4 inches centers.
      a. Hole size: maximum of 3/8 inch and a minimum of 3/16 inch, arranged in 4 rows along the full length of the pipe.

B. Storm Sewer Service: Poly (Vinyl Chloride) (PVC) Schedule 40 Plastic Pipe conforming to Section 33 31 14.

2.02 BEDDING MATERIAL FOR STORM SEWER SERVICE

A. Granular Material meeting MnDOT Spec. 3149.2.B.1, as modified herein:
   1. 100-percent passing, by weight, the 1 inch sieve.

2.03 DRAIN TILE AGGREGATE

A. Coarse Filter Aggregate conforming to MnDOT Spec. 3149.2.H, as modified herein:
   1. Excluding crushed carbonated quarry rock, crushed concrete, and salvaged bituminous.


© 2026 City of Cottage Grove, Minnesota

2.04 GEOSYNTHETIC MATERIALS

A. Geotextile wrap shall conform to MnDOT Spec. 3733, Type 1.

**PART 3 EXECUTION**

3.01 GENERAL

A. The location and alignment of the subsurface drains and outlets will be determined in the field by the Engineer, based on subsurface conditions.

3.02 DRAIN TILE INSTALLATION

A. Conform to details on Drawings.

B. Construct at locations and elevations determined by Engineer or as shown on the Drawings.

C. Pipe Bedding: drain tile aggregate.

D. Grade: Unless otherwise specified or shown on the Drawings, the grade of pipes shall not be flatter than 0.50-percent grade or match the street grade.

E. Plug upstream end of the drain pipe.

F. Sections of the drain pipe shall be firmly joined.

G. Place pipe so that the perforations are in the position indicated on the Drawings or designated by the Engineer.

H. Connections: Connect to hole provided in precast structure. Seal joint with mortar. Core drill connection to structure where precast hole is not provided.

I. Compaction: Conform to Section 33 05 06.

J. Flushing: After installation has been completed, pipes shall be flushed with sufficient water to remove material that has entered the pipes during construction.

3.03 STORM SEWER SERVICE INSTALLATION

A. Construct at locations and elevations determined by Engineer or as shown on the Drawings.

B. Pipe Bedding: Bedding material.

C. Plug upstream end of pipe.

D. Sections of the pipe shall be firmly joined.

E. Connections: Connect to hole provided in precast structure. Seal joint with mortar. Core drill connection to structure where precast hole is not provided.


© 2026 City of Cottage Grove, Minnesota

F. Compaction: Conform to Section 33 05 06.

3.04 FIELD QUALITY CONTROL

A. Do not backfill trench until the pipe has been inspected and approved by the Engineer.

B. Compact all trench backfill with mechanical means by “Quality Compaction Method."

3.05 PROTECTION

A. Mark each storm sewer service plug location with 4 inch by 4 inch timbers to above grade to aid in marking the future connection.

**END OF SECTION**


© 2026 City of Cottage Grove, Minnesota

# SECTION 34 41 05

# TRAFFIC SIGNS AND DEVICES

## PART 1 GENERAL

### 1.01 SUMMARY

A. Section Includes:
   1. Signs, signposts, and hardware.
   2. Double wooden barricades.

B. Related Sections:
   1. Section 02 41 13 - Selective Site Demolition.

### 1.02 PRICE AND PAYMENT PROCEDURES

A. Measurement and Payment:
   1. Sign Panel: Measurement per square foot by type. Payment shall include furnishing sign panel and sheeting. Signs are considered rectangular for the purpose of measurement except measurement for triangular shaped sign panels shall be the actual area of the triangle.
   2. Install Sign Panel: Measurement per each. Payment shall include all hardware, posts, stringers, equipment, and labor necessary to install each sign panel at the identified location in place as specified:
      a. There will be no extra compensation for posts, regardless of length or required configuration.
      b. There shall be no extra compensation for post installations in bituminous or concrete surfaces.
   3. Sign Post Flange Channel: Measurement per Each. Payment shall include the post and installation at locations as identified.
   4. Permanent Barricade: Measurement per each. Payment will include all costs related to furnishing and installing the barricade per the Standard Detail Plate STR-32.
      a. The future road extension sign, if required, will be paid separately as a new sign under the appropriate Bid Item.
   5. City Monument Post: Measurement per each. Payment will include pick-up and installing the open space marker per the Standard Detail Plate STR-40.
   6. All other Work and costs of this Section shall be incidental to the Project and included in the Total Base Bid.

### 1.03 REFERENCES

A. Minnesota Department of Transportation “Standard Specifications for Construction”, 2025 Edition (MnDOT Spec.):
   1. 2564 - Traffic Signs and Devices.
   2. 3352 - Signs.

B. Minnesota Manual on Uniform Traffic Control Devices (MN MUTCD).


© 2026 City of Cottage Grove, Minnesota

C. Minnesota Department of Transportation Standard Signs Manual.

1.04 DELIVERY, STORAGE, AND HANDLING

A. Upon delivery to the Site, store the materials at least 10 feet away from any construction or traveled roadways areas. Vehicles and equipment shall not be stored, even temporarily, in the buffer zone of the work area or where it would be so close to moving traffic that it is in the judgment of the Engineer a potential hazard to motorists.

1.05 SEQUENCING AND SCHEDULING

A. Notify the Engineer at least 48 hours prior to commencing the work under this Section of the Contract for required construction staking.

B. Schedule an onsite pre-signing meeting with the Owner, Engineer, and Signing Subcontractor (if appropriate) a minimum of 24 hours prior to the installation of any signing.

C. Schedule private utility locates through Gopher State One. Call program prior to sign post installation.

D. Contact Washington County for all signs within the County right-of-way that will require temporary or permanent removal.

E. Install signs within 7 calendar days after placement of the pavement adjacent to the sign locations.

**PART 2 PRODUCTS**

2.01 MATERIALS

A. Sign Material:
   1. Sign Panel Base Material: Sheet aluminum conforming to the material requirements of MnDOT Spec. 3352.2.A.1.
   2. Sign Face Material:
      a. Traffic Sign Panels: Reflective sheeting conforming to the requirements of MnDOT Spec. 3352.2.A.3. Diamond Grade DG3, Electro cut or silk screen only, no digital printing.
      b. Street Name Blade Signs: reflective sheeting, Diamond Grade DG3, Electro cut or silk screen only, no digital printing.
   3. Sign Legend Material for Signs: “Direct Applied” conforming to the requirements of MnDOT Spec. 3352.2.A.6.

B. Sign Panels:
   1. Sign panels shall be fabricated and hole punched in accordance with the standard drawings in the MnDOT Standard Signs Manual.
   2. Public street name blade signs shall be provided by and installed by the City of Cottage Grove.
   3. Private street name blade signs shall be blue with white lettering.

C. Sign Posts Flange Channel:
   1. Traffic Signs:


© 2026 City of Cottage Grove, Minnesota

a. Boulevard Installation:
    1) All sign posts shall conform to MnDOT Spec. 3401 and to MNDOT Standard Plan "Type C&D Sign Structural Details". Posts to be 2 sections with the following weight:
        a) Bottom Section: 3.0 lbs./ft.
        b) Top Section: at least 2.5 lbs./ft. and not greater the weight of the bottom post.
    2) The appropriate length of the upper post shall be determined by the Contractor to meet the construction requirements of the above ground stated references at each specific location.
b. Concrete Median Installation:
    1) Telespar square tube system
    2) 2 inches square
    3) 12 gauge galvanized steel
    4) Length: 9 feet, or as determined by Contractor as necessary to meet the construction requirements of the references and this section at each specific sign location:
        a) Telespar Post Part No. 16125 (9 foot)

2. Anchor System:
    a. Concrete Median Location – Kleen Break Anchor:
        1) Kleen Break Surface Mount Anchor (Model No. 425), with receiving coupler, shear bolt and locking wedge.
        2) Mount to surface using Galvanized Simpson Strongtie Titan HD Concrete anchor bolt 1/2 inch x 4 inch (1/2 inch bolt shank):
            a) 3D Specialties (Part No. 55820).
            b) Minimum embedded depth of 3-5/8 inches.
            c) Allowable tension load shall be 2,270 lbs. when installed in 3000 psi concrete.
            d) Allowable shim of up to 1/2 inch.
            e) Longer bolt is acceptable to maintain the 3-5/8 inch minimum embedment depth when shimming.
        3) Use 2 inch square X 9 foot, 12 gauge Telespar posts (Part No. 16125) with a 1-3/4 inch square X 3 foot, 12 gauge Telespar post (Part No. 15520) insert in the bottom (to cover bumper strike area).
        4) Follow Kleen Break Model 425, Drawing No. XKBSM425-20-CI, for installation instructions.
3. Hardware:
    a. Sign Panel: No rivets:
        1) 5/16 – 18 by 2-1/2 inch galvanized carriage bolts.
        2) 7/8 inch OD Nylon washer, 1/32 inch thick.
        3) 3/8 inch stainless steel washer.
        4) 5/16 – 18 galvanized hex nuts.
    b. Anchor System: Boulevard Location:
        1) 5/16 inch diameter medium corner bolt with nut. Galvanized. (Telespar Part No. 56202).

D. Permanent Barricade:
    1. Per Standard Detail Plate STR-32.


© 2026 City of Cottage Grove, Minnesota

E. City Monument Post:
   1. Monument posts shall be purchased from the City of Cottage Grove directly and picked up from Cottage Grove Public Works facility at 8635 West Point Douglas Road, Cottage Grove MN 55016.

2.02 SOURCE QUALITY CONTROL

A. All material certification shall conform to MnDOT Spec 2564.

**PART 3 EXECUTION**

3.01 GENERAL

A. Unless otherwise noted or modified herein, all sections of MnDOT Spec. 2564, all sections of MnDOT's Standard Signs Manual, and Chapter 6 of MN MUTCD shall apply.

B. The fabrication of all signs and devices shall conform to MnDOT Spec. 2564 and the latest edition of the MN MUTCD and the MnDOT Standard Signs Manual.

C. The sign number designation indicated on the Drawings shall comply with applicable requirements of MN MUTCD and MnDOT Standard Signs Manual.

3.02 CONSTRUCTION

A. Sign locations shown on the Drawings are only approximate. The final locations shall be determined in the field by the Engineer. Have all underground utilities located prior to installing all signposts. Provide Engineer 48 hour notice prior to sign installations to allow for adequate staking time:
   1. Standard location for traffic sign posts shall be a 6 feet behind the back of curb or edge of traveled road.
   2. The lowest point of any traffic sign panel installed shall be 7 feet above finish grade at the point of installation. The lowest point of any street name sign installed shall be 10 feet above finish grade at the point of installation.

B. Fabricate, hole punch, and mount sign panels in accordance with the standard drawings in the MnDOT Standard Signs Manual. Date the back of each newly installed sign panel with a theft warning sticker stating the month and year using inventory/I.D. stickers approved by the Owner.

C. Install nylon washers between the bolt and the sign face (sheeting) to protect face. Do not over tighten bolts to the point where the sign sheeting separates from the sign backing, which would be cause for rejection and replacement at no additional cost to the Contract. There shall also be a stainless steel washer between the nylon washer and the bolt head.

D. Post Anchorage:
   1. Within concrete median: Install Surface Mount Anchor and bolts as shown on Standard Detail Plate STR-36.

E. Permanent Barricade:
   1. Install at locations shown on Drawings and per Standard Detail Plate STR-32.


© 2026 City of Cottage Grove, Minnesota

2. Barricades to span entire roadway.
3. If shown on Drawings or required by Engineer, attach “Future Road Extension Sign” per Standard Detail Plate STR-31.
4. If shown on Drawings or required by the Engineer, attach “end of road marker”, 9 button OM4-2 red on black sign.

F. Provide traffic control to safely install signs and to safely guide traffic through the work area during installation.

G. Sign Post Flange Channel:
1. The bottom section of each sign post shall be mounted into the ground to a minimum depth of 3-1/2 feet.
2. The lower section of the post shall be at least 30 inches above ground to allow for a 12 inch splice and a minimum clearance of 18 inches from the ground to the bottom of the top section of the post.
3. The splice of the upper and lower section posts shall be made with 2 – 5/16 inch stainless steel bolts with nylon insert lock nuts placed in the top and bottom holes of the overlap splice.
4. Where 2 or more single post signs are mounted side by side, they shall be reinforced laterally by at least 2 post sections, bolted at each post, and located approximately at the quarter points.
5. Where a name blade sign is to be installed above a stop sign extend flange channel post 2” above the top of the stop sign.

3.03 FIELD QUALITY CONTROL

A. All work shall conform to MnDOT Spec. 2564.

3.04 CLEANING

A. Clean any sign after installation if requested by the Engineer.

**END OF SECTION**


© 2026 City of Cottage Grove, Minnesota

This Page Left Blank Intentionally

# SANITARY SEWER

## Gravity Main

Material ..... PVC

Minimum Diameter ..... 8-inch

Class:

Less than 18 ft depth ..... SDR-35

Less than 28 ft depth ..... SDR-26

Greater than 28 ft depth ..... Designed by Engineer

Minimum Cover ..... 10 ft minimum depth

*Note: Maintain minimum cover unless approved by City Engineer*

Grade ..... Ten States Standards (2 fps), n=0.013

Location ..... Center of street

*Note: Manhole is required at stub if line is to be active*

## Structures

Type ..... Precast, See City Standard Specification

Minimum Diameter ..... 48-inch

Maximum Spacing ..... 400 ft

Inside Drop ..... SAN-4

Location ..... Street Centerline

## Services

Material ..... PVC

Wye (class) ..... Match Sewer Main

Service Pipe ..... SCH 40

Minimum Diameter:

Single Family ..... 4-inch @ 2.0%

Multi-Unit Residential ..... 6-inch @ 1.0%

Commercial – Industrial ..... Determined by Engineer

*Note: Comply with Minnesota Plumbing Code*

Cleanout ..... If service length exceeds 100 ft

# WATER MAIN

## Main Pipe

Material ..... DIP

Minimum Diameter ..... 8-inch unless approved by City Engineer

Class:

< 20-Inch Diameter ..... CL 52

20-Inch or Greater Diameter ..... CL 51

Standard Cover ..... 7.5 ft

Location ..... 10 ft from sewers

*Note: North or west of street centerline*

Encasement ..... Polyethylene

Bends ..... Avoid use of 90 degree bends

Joint Restraint ..... See City Standard Specification

## Hydrants

Type ..... See City Standard Specification

Maximum Coverage Radius:

Single Family Lot ..... 300 ft

Commercial, Industrial, Multi-Family Building ..... 250 ft

Valve ..... Required on hydrant lead, 6-inch

Hydrant Pad ..... STR-37

Placement .....At lot lines, 5 ft behind back of curb

Desired Location .....Intersections, end of cul-de-sac

### Valves

Type:

< 12-Inch Diameter .....Gate Valve

12-Inch Diameter and Greater ..... Butterfly Valve

*Note: See City Standard Specification for Product Information*

Maximum area isolated ..... 20-25 homes

Desired Location ..... Intersections or every 800 ft

### Services

Material:

Single Family ..... Type K copper

Other .....DIP

Minimum Diameter.....1-inch (single family)

Curb Stop Location..... At right-of-way, see City Detail Plate when sidewalk is present

### Private Irrigation (Crossing Public Property)

Material:

DIP Casing .....Always use when crossing right-of-way, crossing public utilities, or ≤ 4-ft deep

PVC Casing ..... Use when crossing outlots, must be > 4-ft deep

## STORM SEWER

### Design

Design frequency for storm sewers .....5-year

Design frequency for stormwater basins.....100-year

Trunk pipe:

*Design to carry both the 100-yr pond discharge and 5-yr design flow for directly connected areas*

Pipe diameter change in profile..... Match crown of pipe

*Note: In cases where not possible, submit calculations to demonstrate excessive surcharging does not occur*

Methodology..... Rational method, gravity flow

Manning n-value .....0.013

Minimum Velocity (pipe) ..... 3 fps

Maximum Velocity (pipe)..... 10 fps

Maximum Velocity at Pond Inlets..... 6 fps

Maximum Velocity (overland discharge) ..... 4 fps

Catch Basin Spacing .....400' maximum street flow (local roads)

*Note: On State Aid routes, spread calculations are required*

Rear Yard Storm Sewer ..... Maximum 3-4 lots overland drainage

*Note: 300-ft maximum length of run for jetting*

Pond inlets ..... Invert to match outlet elevation

Minimum Pond Depth.....3 ft

Maximum Pond Depth.....8 ft

## Main Pipe

Material ..... RCP & PP (dual wall)

*Note: RCP is required for the entire pipe run (structure to structure) that is connected to a flared end section, skimmer structure, or outlet structure.*

Minimum Diameter..... 12-inch

RCP Pipe Class .....Use Concrete Pipe Association Fill Height Tables

Minimum Cover .....3 ft within street, 2 ft in greenspace (3 ft min. when PP is used)

Location..... South or east side of street (within street)

*Note: Avoid running behind curb as that location typically conflicts with streetlight bases, signs, and boulevard tree plantings*

## Structures

Type ..... Precast, See City Standard Specification

Minimum Diameter..... 48-inch

Maximum Spacing.....400 ft

*Note: Also required at all pipe connection points*

Catch Basin Location .....STR-28

*Note: Avoid mid-radius placement when possible*

Sumps..... Last structure in street prior to pond

Skimmer Structures..... Placed prior to infiltration feature and at pond outlet

Castings ..... See City Standard Specification

## Miscellaneous

Pond Benching ..... STO-15

Pond Slope Below NWL:

Permanent Pools 1-2 times the Volume of the 2.5" Rain Runoff... 1(V):3(H) allowed per STO-15

Permanent Pools 2-4 times the Volume of the 2.5" Rain Runoff..... 1(V):4(H)

*Note: No ponds with a permanent pool greater than 4 times the volume of the 2.5" rain runoff will be allowed.*

Minimum Freeboard:

100-yr HWL.....3 ft below low adjacent grade of building

Basin EOF .....2 ft below low adjacent grade of building

*Note: For backyard and side-yard conveyance and temporary ponding areas, provide 1 ft freeboard to the overland EOF*

Pond Requirements ..... See Surface Water Plan

Wet Ponds.....24" min. liner section

1. Place liner section along pond bottom to an elevation 1 vertical ft above NWL.
2. Liner section includes:
    a. 12" (minimum) topsoil layer over 12" (minimum) clay liner
        i. Clay shall have a maximum permeability of $1x10^{-6}$ cm/s.

Infiltration Basin..... 12” min. media thickness

1. The City recommends providing a Filter Topsoil Borrow (MnDOT 3877.2.G) consisting of 70% sand (meeting the gradation requirements of 3126) and 30% Grade 2 Compost (MnDOT 3890).

Pond 100-yr HWL .....Contained entirely in Outlot

Minimum basin & pond access:

Access Width ..... 20-ft wide Outlot

Slope .....1(V):6(H) maximum longitudinal slope

*Note: Need ability to access structures around basin with 10’ maintenance bench*

Minimum greenspace grade for drainage ..... 2.0%

## PUBLIC STREETS

### Geometric Design, Local Residential

Minimum Street Width (face of curb to face of curb) .....28 ft

Typical Crown..... 2.4%

Curb Type .....Surmountable D428

Minimum Longitudinal Grade ..... 0.75%

Maximum Longitudinal Grade ..... 5.0%

*Note: Maximum 8% is allowed only if existing topography prohibits 5% grade*

Maximum Intersection Approach Grade .....2.0% for first 100 ft

Intersection Angles..... 90 degrees

Minimum Horizontal Curve Radius .....100 ft

Minimum Vertical Curve Length ..... Minimum K=19 (crest) and K=37 (sag)

Minimum Curb Radius .....20 ft

Cul-de-sacs ..... STR-4 & STR-5

*Note: Temporary cul-de-sac with bituminous curb is required at phased plat boundary of dead-end street*

## Geometric Design, Collector, or Commercial

Minimum Street Width (back of curb to back of curb)..... Varies

Typical Crown..... 2.0%

Curb Type ..... B618 (design speed < 45 mph)

Minimum Longitudinal Grade ..... 0.75%

Maximum Longitudinal Grade ..... 5.0%

Maximum Intersection Approach Grade ..... 2.0% for first 100 ft

Intersection Angles ..... 90 degrees

Minimum Horizontal Curve Radius ..... State Aid Tables

Minimum Vertical Curve Length ..... State Aid Tables

Tangent length at intersection from curb line.....100 ft

Minimum Curb Radius .....30 ft

## Pavement Design

Minimum Structural Design ..... 10-ton R-value, MnDOT Flex Pave (collectors)

*Note: For local roads, see City Detail Plate*

Bituminous Mix Types:

Residential .....C-oil

Collector ..... F-oil

Trail.....C-oil

*Note: See City Standard Specification*

Minimum Bituminous & Aggregate Base.....STR-1, STR-2, STR-3

Sub-base..... In-place granular or as determined by Engineer

## Signing & Striping

Design Standards .....Follow MMUTCD

Signs ..... Follow City Sign Policy

Sign Panels .....Diamond Grade DG3

Multi-Component (Ground In) ..... Road lane striping

Latex:

Ground In: ..... Pavement messages, stop bars, crosswalks (collector)

Non Ground In: ..... Parking lots (applied twice), temporary markings, crosswalks (residential)

Typical Widths:

Stop Bar ..... 24 inches

*Note: Required on all collector and arterial intersections*

Crosswalk ..... 12-inch transverse

Intersections ..... Collector and arterial intersections

Mid-Block ..... Per MUTCD, incl. within school crossings

*Note: Other crossings marked as determined by City Engineer.*

Mid-Block Signage:

Location: ..... Placed on the back side of pedestrian ramp as vehicles approach

Type: ..... W11-2 (30”x30”) placed over W16-7P (24”x18”)

*Note: Signs shall be placed on both sides of post and visible from both directions.*

No Outlets ..... W14-2a (installed on street name sign)

*Note: W14-2 supplemented as determined by Engineer*

## Entrances & Driveways

Commercial Apron ..... STR-21

Maximum Driveway Grade (residential) ..... 10.0%

Private Streets ..... Max. approach to match boulevard grade

## Boulevard

Typical Slope ..... 3.0%

Minimum Topsoil Depth ..... 6.0 inches

Street Light Pole/Conduit Location ..... 3 ft behind curb

Hydrant Location ..... 5 ft behind curb

Tree Location (with sidewalk) ..... 5 ft behind curb

Tree Location (without sidewalk) ..... 10 ft behind

Sign Post ..... 6 ft behind curb

## Sidewalks & Trails

Typical Section ..... STR-9

Typical Width:

Sidewalk ..... 6 ft

Trail ..... 8 ft

Locations ..... As directed

Maximum Longitudinal Grade ..... See current ADA standards

Maximum Cross Slope ..... See current ADA standards

Pedestrian Ramps ..... See current ADA standards & MnDOT details

*Note: Concrete flares on sidewalk and trail (unless perpendicular to back of curb); Graded flare on 8' wide or greater bituminous trails, unless adjacent to walkable surface*

Clear Zone ..... 2 ft

Intersecting Trails ..... Provide a 10' min. radius for plowing and maneuverability

## Street Lighting

Spacing, Residential ..... Approx. 200-250 ft at lot lines

Spacing, Commercial/Collector Streets ..... IES Standards

*Note: Or as directed by Engineer*

Location ..... Place along trail or sidewalk side of road

*Note: Place poles at intersections, mid-block pedestrian crossings, at lot lines, and end of cul-de-sacs when possible*

Lights per circuit and length of run ..... Designed by Engineer

Feed Point Cabinet ..... See City Standard Specification

Conduit ..... 1.5-inch minimum NMC

*Note: Required for all underground wiring*

Pole Types ..... See City Detail Plates

## Landscaping

Planting Restrictions:

1. Deciduous trees should be located a minimum of 5’ off any utility pipe
2. Coniferous trees should be located a minimum of 15’ off any utility pipe
3. No tree should be located within 10’ of a hydrant or 15’ from a streetlight
4. No trees should be located within a storm pond HWL
5. No trees should be located within a storm pond’s 20’ access route, and no coniferous tree within 5’ of the 20’ pond access route
6. No coniferous trees within 20’ of a proposed sidewalk/trail
7. No deciduous trees within 5’ of a sidewalk/trail
8. For trees within public right-of-way or public outlot, trees shall conform to the current list of approved species

Public Tree Planting List 2026

Overstory

Northern Red Oak- *Quercus rubra*
White Oak- *Quercus alba*
Heritage Oak- *Quercus x macdaniellii ‘Clemons’*
St. Croix Elm- *Ulmus americana ‘St. Croix’*
Redmond Linden- *Tilia americana ‘Redmond’*
New Horizon Elm- *Ulmus ‘New Horizon’*
Accolade Elm- *Ulmus davidiana var. japonica 'Morton'*
Shademaster Honeylocust- *Gleditsia tricanthos var. inermis ‘Shademaster’*
Hackberry- *Celtis occidentalis*
River Birch- *Betula nigra* (SINGLE STEM ONLY)
Renaissance Oasis Birch- *Betula papyrifera ‘Oenci’*
Yellowwood- *Cladrastis kentuckea*
Espresso Kentucky Coffeetree- *Gymnocladus dioicus ‘Espresso’*
Ginkgo- *Ginkgo biloba*

Understory

Japanese Tree Lilac- Syringa reticulata 'Ivory Silk' (SINGLE STEM ONLY)
Spring Snow Crabapple- Malus ‘Spring Snow’
Ironwood- Carpinus caroliniana

# INDEX

City Plate No.

## BEDDING


| | |
|---|---|
| BED1 | PIPE FOUNDATION AND BEDDING METHODS FOR PVC & POLYPROPYLENE |
| BED2 | PIPE FOUNDATION AND BEDDING METHODS FOR RCP & DIP |
| BED3 | IMPROVED FOUNDATION FOR RCP, DIP, PVC, AND POLYPROPYLENE PIPE TRENCH |
| BED4 | PVC, POLYPROPYLENE, RCP, AND DIP PIPE BEDDING IN ROCK |


Cottage Grove

Where Pride and Prosperity Meet

BEDDING
INDEX

JANUARY 2026

PLATE NO.

# INDEX

City Plate No.

## EROSION CONTROL


| | |
|---|---|
| ERO1 | MACHINE SLICED SILT FENCE |
| ERO2 | HAND INSTALLED SILT FENCE |
| ERO3 | HEAVY DUTY SILT FENCE |
| ERO4 | J-HOOK SILT FENCE |
| ERO5 | ROLLED EROSION PREVENTION PRODUCTS INSTALLATION |
| ERO6 | FLOATING SILT CURTAIN |
| ERO7 | INLET PROTECTION - SILT BOX FOR CATCH BASIN |
| ERO8 | INLET PROTECTION - ROCK FILTER FOR CATCH BASIN |
| ERO9 | INLET PROTECTION - CATCH BASIN INSERT |
| ERO10 | INLET PROTECTION - SILT BOX FOR BEEHIVE CASTING |
| ERO11 | FILTER BERMS |
| ERO12 | CONSTRUCTION ENTRANCE ROCK AND WOODCHIP |
| ERO13 | SLOPE TRACKING |
| ERO14 | TEMPORARY SEDIMENT TRAP/BASIN |
| ERO15 | TEMPORARY SEDIMENT TRAP/BASIN ON FUTURE SUBGRADE |


Cottage Grove

Where Pride and Prosperity Meet

EROSION CONTROL
INDEX

JANUARY 2026

PLATE NO.

# INDEX

## IRRIGATION


| City Plate No. | |
|---|---|
| IRR1 | RAIN SENSOR |
| IRR2 | EXTERIOR CONTROLLER |
| IRR3 | GATE VALVE |
| IRR4 | QUICK COUPLING VALVE |
| IRR5 | REMOTE CONTROL VALVE |
| IRR6 | DRIP REMOTE CONTROL VALVE |
| IRR7 | VALVE BOX LAYOUT |
| IRR8 | TRENCHING |
| IRR9 | WATERPROOF CONNECTOR |
| IRR10 | POP-UP SPRINKLER |
| IRR11 | MANUAL FLUSH VALVE |
| IRR12 | DRIP IRRIGATION LAYOUT |
| IRR13 | DRIP EMITTER SPACING |
| IRR14 | DRIP EMITTER INSTALLATION |
| IRR15 | IRRIGATION CABINET |


Cottage Grove
Where Pride and Prosperity Meet

IRRIGATION
INDEX

JANUARY 2026

PLATE NO.

# INDEX

City Plate No.

## LANDSCAPING


| | |
|---|---|
| LAN1 | TYPICAL EVERGREEN TREE PLANTING |
| LAN2 | TYPICAL DECIDUOUS TREE PLANTING |
| LAN3 | TYPICAL SHRUB PLANTING B&B OR CONTAINER GROWN |


Cottage Grove
Where Pride and Prosperity Meet

LANDSCAPING
INDEX

JANUARY 2026

PLATE NO.

# INDEX

## LIGHTING


| City Plate No. | |
|---|---|
| LGT1 | LIGHTING HANDHOLE |
| LGT2 | CONCRETE LIGHT BASE TYPE A |
| LGT3 | CONCRETE LIGHT BASE TYPE P |
| LGT4 | CONCRETE LIGHT BASE TYPE E |
| LGT5 | CONCRETE LIGHT BASE TYPE F |
| LGT6 | LIGHTING EQUIPMENT PAD |
| LGT7 | LIGHT POLE TYPE A RESIDENTIAL |
| LGT8 | LIGHT POLE TYPE P1 - RAVINE SINGLE LED FIXTURE 14 FOOT |
| LGT9 | LIGHT POLE TYPE P2 - RAVINE SINGLE LED FIXTURE 18 FOOT |
| LGT10 | LIGHT POLE TYPE P3 - RAVINE DOUBLE LED FIXTURE 14 FOOT |
| LGT11 | LIGHT POLE TYPE E1 - RAVINE DOUBLE LED FIXTURE 18 FOOT |
| LGT12 | LIGHT POLE TYPE P4 - COBRA HEAD LED FIXTURE 20 FOOT |
| LGT13 | LIGHT POLE TYPE E2 - COBRA HEAD LED FIXTURE 30 FOOT |
| LGT14 | LIGHT POLE TYPE F1 - LED LIGHTING UNIT 31 FOOT - 11 INCH |


Cottage Grove
Where Pride and Prosperity Meet

LIGHTING
INDEX

JANUARY 2026

PLATE NO.

# INDEX

## SANITARY


| City Plate No. | |
|---|---|
| SAN1 | SANITARY SEWER MANHOLE |
| SAN2 | SANITARY SEWER JUNCTION MANHOLE |
| SAN3 | SANITARY SEWER JUNCTION MANHOLE WITH REINFORCED TOP SLAB |
| SAN4 | SANITARY SEWER DROP INLET MANHOLE |
| SAN5 | WATERTIGHT CASTING FOR SANITARY SEWER MANHOLE |


Cottage Grove
Where Pride and Prosperity Meet

SANITARY
INDEX

JANUARY 2026

PLATE NO.

# INDEX

City Plate No.

## SERVICES


| | |
|---|---|
| SER1 | RESIDENTIAL SEWER AND WATER SERVICE CONNECTIONS |
| SER2 | PRIVATE CONNECTIONS TO PUBLIC UTILITIES |
| SER3 | REMOVED |
| SER4 | REMOVED |
| SER5 | LOCATING REQUIREMENTS FOR SINGLE FAMILY HOUSES |
| SER6 | LOCATING REQUIREMENTS FOR MULTI-UNIT AND COMMERCIAL BUILDINGS |
| SER7 | PVC SANITARY SERVICE SADDLE CONNECTION |
| SER8 | SERVICE CONNECTION TO RCP |
| SER9 | SERVICE RISER |
| SER10 | PVC SERVICE LINE CLEANOUTS |
| SER11 | CASTING PROTECTION AT CLEANOUT & CURB BOX |
| SER12 | IRRIGATION SERVICE |
| SER13 | IRRIGATION SERVICE BY PRIVATE CONTRACTOR |

# INDEX

City Plate No.

## SPECIAL


SPECIAL1 PICNIC TABLE
SPECIAL2 PARK BENCH
SPECIAL3 TRASH CAN
SPECIAL4 BOLLARD
SPECIAL5 PARK MONUMENT SIGN CONCRETE SLAB


Cottage Grove
Where Pride and Prosperity Meet

SPECIAL
INDEX

JANUARY 2026

PLATE NO.

# INDEX

## STORM SEWER


| City Plate No. | |
|---|---|
| STO1 | STORM SEWER MANHOLE |
| STO2 | STORM SEWER JUNCTION MANHOLE |
| STO3 | STORM SEWER JUNCTION MANHOLE WITH REINFORCED TOP SLAB |
| STO4 | STORM SEWER JUNCTION MANHOLE WITH REINFORCED TOP SLAB AND SUMP |
| STO5 | CATCH BASIN MANHOLE |
| STO6 | CATCH BASIN MANHOLE WITH SUMP |
| STO7 | CATCH BASIN |
| STO8 | CATCH BASIN WITH SUMP |
| STO9 | OFF STREET CATCH BASIN WITH CONCRETE STOOL GRATE FRAME |
| STO10 | SHALLOW OFF STREET CATCH BASIN WITH CONCRETE STOOL GRATE FRAME |
| STO11 | FLARED END SECTION WITH TRASHGUARD |
| STO12 | RIP RAP AT FLARED END SECTION |
| STO13 | GROUTED RIP RAP AT FLARED END SECTION |
| STO14 | PVC PERFORATED PIPE |
| STO15 | TYPICAL BENCH DETAIL |
| STO16 | STANDARD SKIMMER STRUCTURE |
| STO17 | POND OUTLET SKIMMER STRUCTURE |
| STO18 | STANDARD OVERFLOW STRUCTURE |
| STO19 | OUTLET STRUCTURE |
| STO20 | OVERFLOW STRUCTURE W/ SLUICE GATE AND ORIFICE |
| STO21 | SEEPAGE COLLAR |
| STO22 | STORM SEWER SERVICE CONNECTION TO RCP |
| STO23 | SKIMMER STRUCTURE WITH WEIR |


Cottage Grove
Where Pride and Prosperity Meet

STORM SEWER
INDEX

JANUARY 2026

PLATE NO.

# INDEX

## STREETS


| City Plate No. | |
|---|---|
| STR1 | TYPICAL PUBLIC STREET SECTION RESIDENTIAL (28' F-F) |
| STR2 | TYPICAL PUBLIC STREET SECTION RESIDENTIAL (32' F-F) |
| STR3 | TYPICAL PRIVATE STREET URBAN SECTION |
| STR4 | TYPICAL CUL-DE-SAC SECTIONS RESIDENTIAL (28' F-F) |
| STR5 | TYPICAL CUL-DE-SAC SECTIONS RESIDENTIAL (32' F-F) |
| STR6 | ENTRANCE DETAIL |
| STR7 | RURAL ROADWAY STREET ENTRANCE |
| STR8 | RURAL ROADWAY STREET ENTRANCE WITH CATCHBASINS |
| STR9 | TYPICAL BITUMINOUS TRAIL AND CONCRETE SIDEWALK SECTIONS |
| STR10 | CURB AND GUTTER |
| STR11 | WATER AND SEWER SERVICE LOCATION STAMP IN CURB |
| STR12 | CONCRETE CURB AND GUTTER TRANSITION |
| STR13 | SURMOUNTABLE CURB AND GUTTER CONSTRUCTION AT CATCHBASIN |
| STR14 | B618 CURB AND GUTTER CONSTRUCTION AT CATCHBASIN |
| STR15 | 4' DIA. HIGH CAPACITY CATCHBASIN B618 CURB |
| STR16 | CONCRETE VALLEY GUTTER |
| STR17 | CONCRETE DRIVEWAY APRON COMMERCIAL |
| STR18 | CONCRETE DRIVEWAY APRON RESIDENTIAL |
| STR19 | CONCRETE CURB REPLACEMENT |
| STR20 | CONCRETE CURB REPLACEMENT AT DRIVEWAY LOCATION |
| STR21 | CONCRETE COMMERCIAL DRIVEWAY APRON OR CURB AND GUTTER CONNECT TO EXISTING STREET |
| STR22 | RESIDENTIAL DRIVEWAY CONNECT TO EXISTING STREET |
| STR23 | CATCHBASIN AND MANHOLE ADJUSTMENT |
| STR24 | MANHOLE CASTING IN B618 CURB AND GUTTER |
| STR25 | STRUCTURE ADJUSTMENT PATCH (BITUMINOUS OR CONCRETE) |
| STR26 | CONCRETE CURB PROTECTION BITUMINOUS WEDGE |
| STR27 | TEMPORARY TURNAROUND |
| STR28 | TYPICAL UTILITY LOCATIONS |
| STR29 | STREET NAME BLADE SIGNS PUBLIC STREETS |
| STR30 | STREET NAME BLADE SIGNS PRIVATE STREETS |
| STR31 | FUTURE ROAD EXTENSION SIGN |
| STR32 | PERMANENT BARRICADE |
| STR33 | MAIL BOX INSTALLATION |
| STR34 | PRIVATE UTILITY CONDUIT CROSSING |
| STR35 | BITUMINOUS REMOVAL LIMITS |

# INDEX

City Plate No.

## STREETS


| | |
|---|---|
| STR36 | TYPICAL TRAFFIC SIGN INSTALLATION MEDIAN |
| STR37 | CONCRETE HYDRANT PAD |
| STR38 | DIP IRRIGATION CONDUIT CROSSING |
| STR39 | CONCRETE APPROACH NOSE DETAILS |
| STR40 | CITY MONUMENT POST |
| STR41 | STRUCTURE MARKER SIGN |
| STR42 | CONCRETE SIDEWALK REPLACEMENT AT DRIVEWAY LOCATION |


Cottage Grove
Where Pride and Prosperity Meet

STREETS (page 2)
INDEX

JANUARY 2026

PLATE NO.

# INDEX

## WATER MAIN


| City Plate No. | |
|---|---|
| WAT1 | HYDRANT DETAIL |
| WAT2 | HYDRANT DETAIL WITH VERTICAL BEND |
| WAT3 | GATE VALVE AND BOX INSTALLATION |
| WAT4 | BUTTERFLY VALVE AND BOX INSTALLATION |
| WAT5 | WATER MAIN WET TAP |
| WAT6 | CONCRETE THRUST BLOCKING |
| WAT7 | WATERMAIN OFFSET |
| WAT8 | DIP SERVICE OR DEAD END LINE |
| WAT9 | INSULATION DETAIL |


Cottage Grove
Where Pride and Prosperity Meet

WATER MAIN
INDEX

JANUARY 2026

PLATE NO.

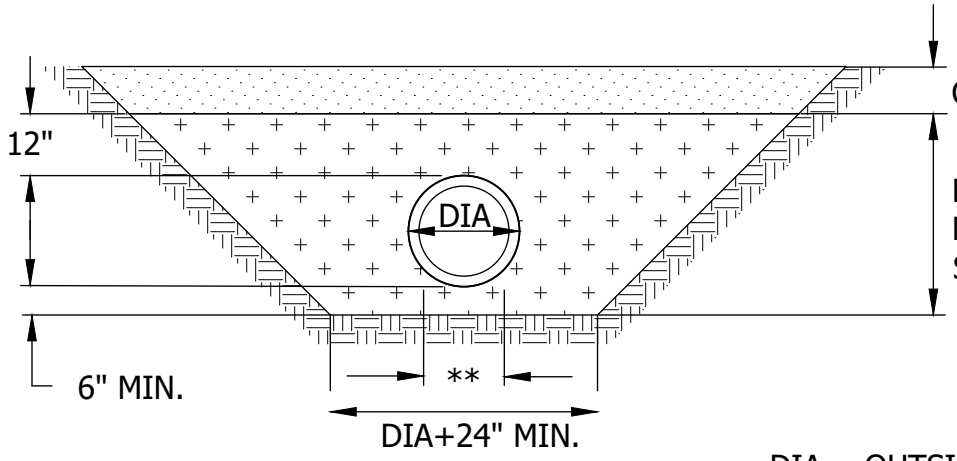


DIA = OUTSIDE DIAMETER OF PIPE

** = BEDDING DIA/3 WIDE.
LOOSELY PLACED /
UNCOMPACTED MATERIAL.

## PVC AND POLYPROPYLENE PIPE FOUNDATION & BEDDING IN GOOD SOILS

Cottage Grove
Where Pride and Prosperity Meet

STANDARD DETAILS

PIPE FOUNDATION & BEDDING METHOD FOR
PVC & POLYPROPYLENE PIPE

COTTAGE GROVE, MINNESOTA

JANUARY 2026

PLATE NO.
BED-1

48_BED1.DWG

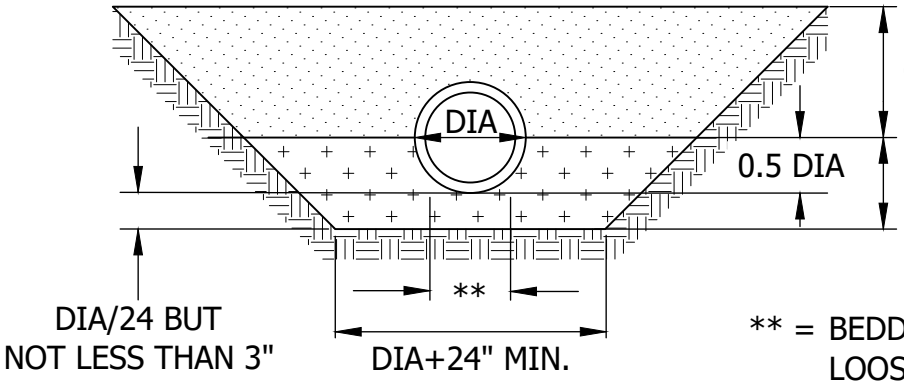


COMPACTED BACKFILL

PIPE BEDDING MATERIAL
PER SECTION 33 05 06.

** = BEDDING DIA/3 WIDE.
LOOSELY PLACED /
UNCOMPACTED MATERIAL.

DIA = OUTSIDE DIAMETER OF PIPE

## INSTALLATION TYPE 1

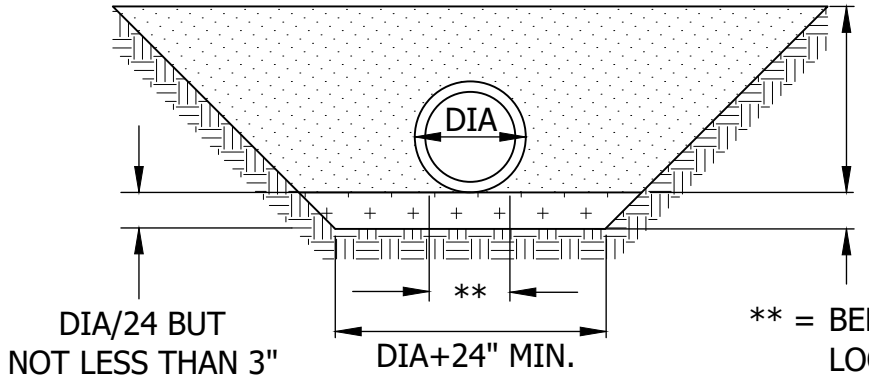


COMPACTED BACKFILL

PIPE BEDDING MATERIAL
PER SECTION 33 05 06.

** = BEDDING DIA/3 WIDE.
LOOSELY PLACED /
UNCOMPACTED MATERIAL.

DIA = OUTSIDE DIAMETER OF PIPE

## INSTALLATION TYPE 2

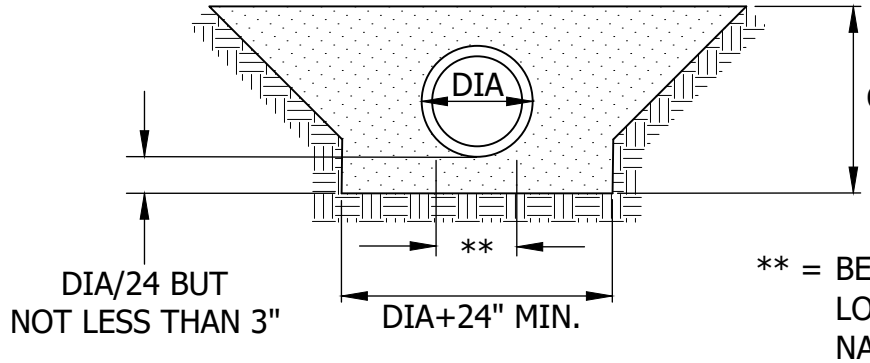


COMPACTED BACKFILL

** = BEDDING DIA/3 WIDE.
LOOSELY PLACED / UNCOMPACTED
NATIVE TRENCH MATERIAL.

DIA = OUTSIDE DIAMETER OF PIPE

## INSTALLATION TYPE 3

Cottage Grove
Where Pride and Prosperity Meet

## STANDARD DETAILS

PIPE FOUNDATION & BEDDING
METHODS FOR RCP & DIP

COTTAGE GROVE, MINNESOTA

JANUARY 2026

PLATE NO.
BED-2

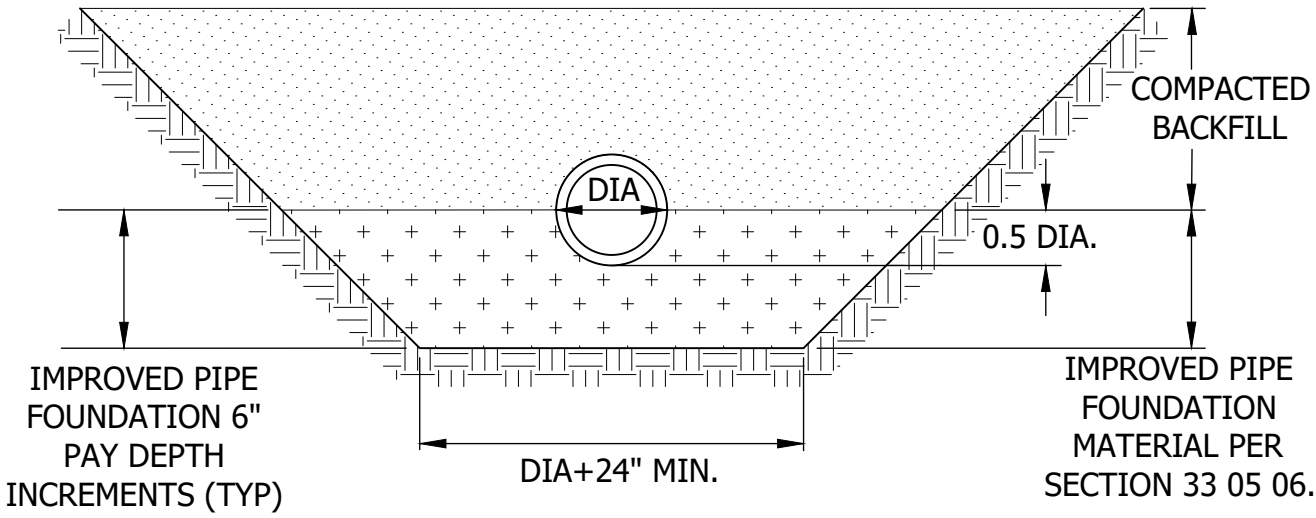


DIA = OUTSIDE DIAMETER OF PIPE

RCP & DIP PIPE

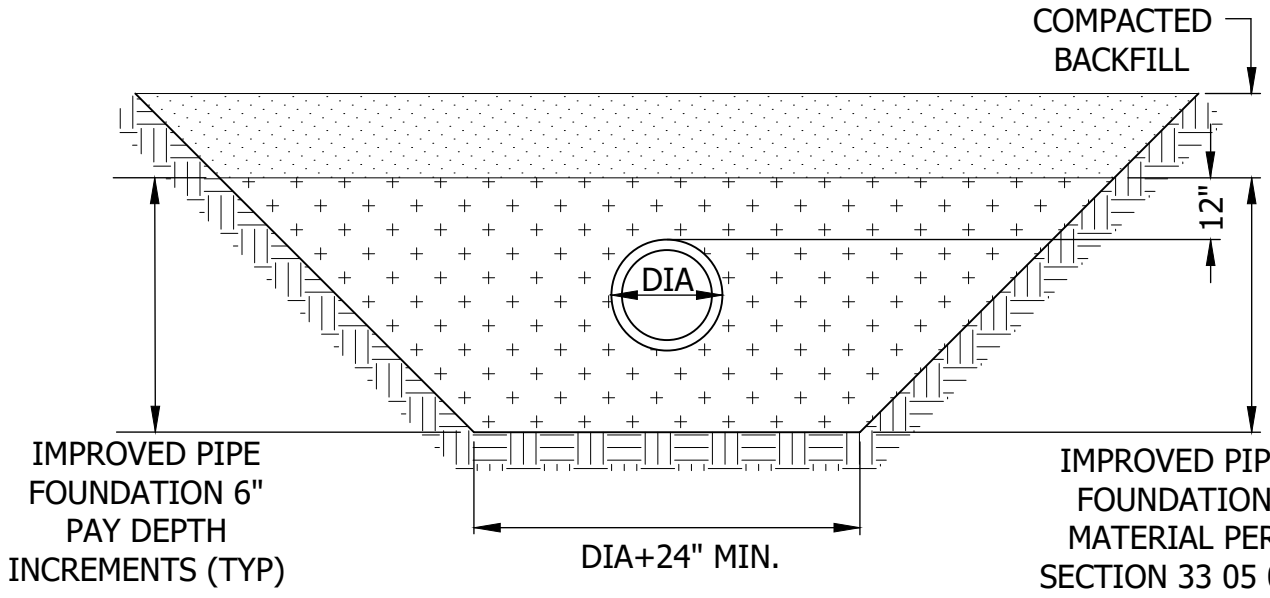


DIA = OUTSIDE DIAMETER OF PIPE

PVC & POLYPROPYLENE PIPE

Cottage Grove
Where Pride and Prosperity Meet

# STANDARD DETAILS

IMPROVED FOUNDATION FOR RCP, DIP, PVC, POLYPROPYLENE PIPE TRENCH

COTTAGE GROVE, MINNESOTA

JANUARY 2026

PLATE NO.
BED-3

48_BED3.DWG

* USE GRANULAR BORROW WHEN TOP OF PIPE IS WITHIN 3 FEET OF SUBGRADE. IF GREATER THAN 3 FEET, USE SUITABLE EXISTING ONSITE BACKFILL.

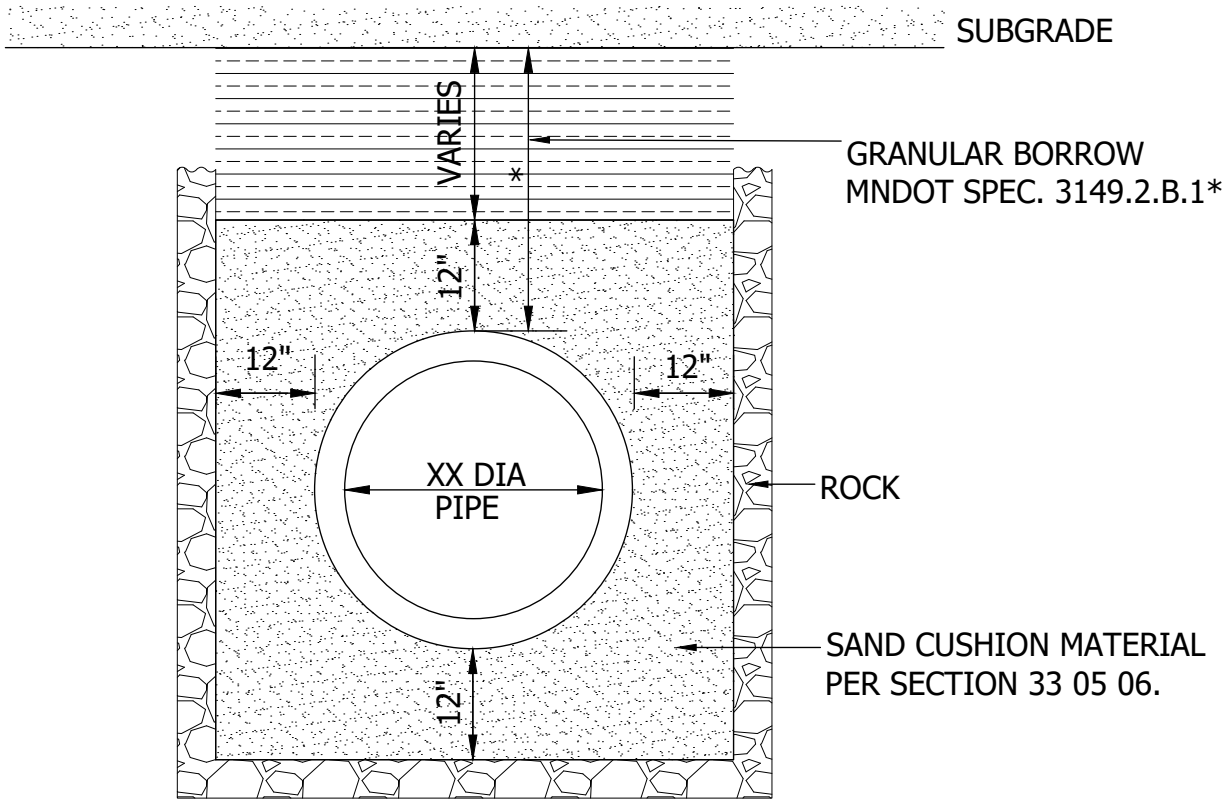


Cottage Grove
Where Pride and Prosperity Meet

# STANDARD DETAILS

PVC, POLYPROPYLENE, RCP AND
DIP PIPE BEDDING IN ROCK

COTTAGE GROVE, MINNESOTA

JANUARY 2026

PLATE NO.
BED-4

48_BED4.DWG

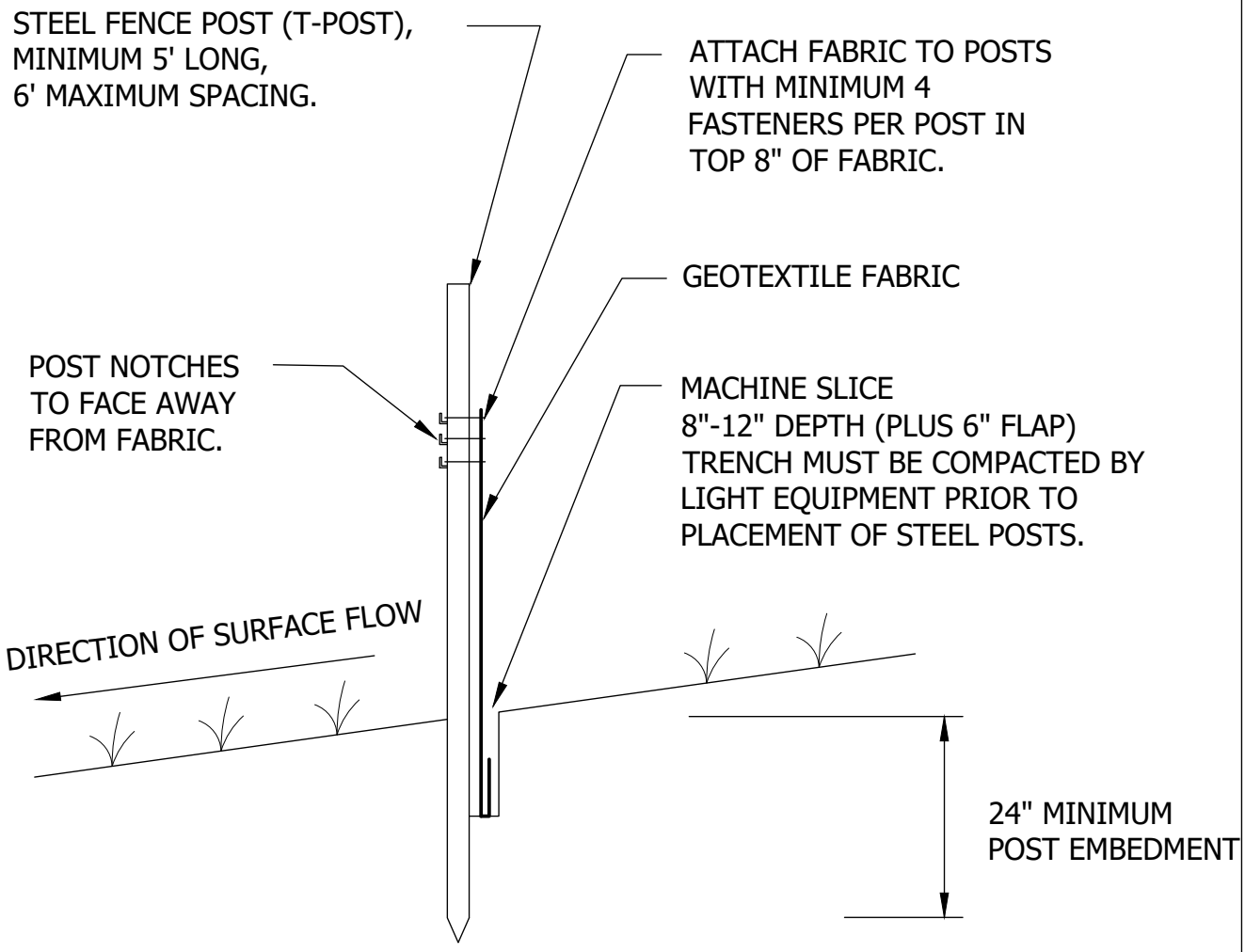


NOTE:
HEAVY-DUTY SILT FENCE INSTALLATION METHODS SHOULD BE USED WHEN DIRECTED BY THE CITY.

Cottage Grove
Where Pride and Prosperity Meet

# STANDARD DETAILS

MACHINE SLICED SILT FENCE

COTTAGE GROVE, MINNESOTA

JANUARY 2026

PLATE NO.
ERO-1

48_ERO1.DWG

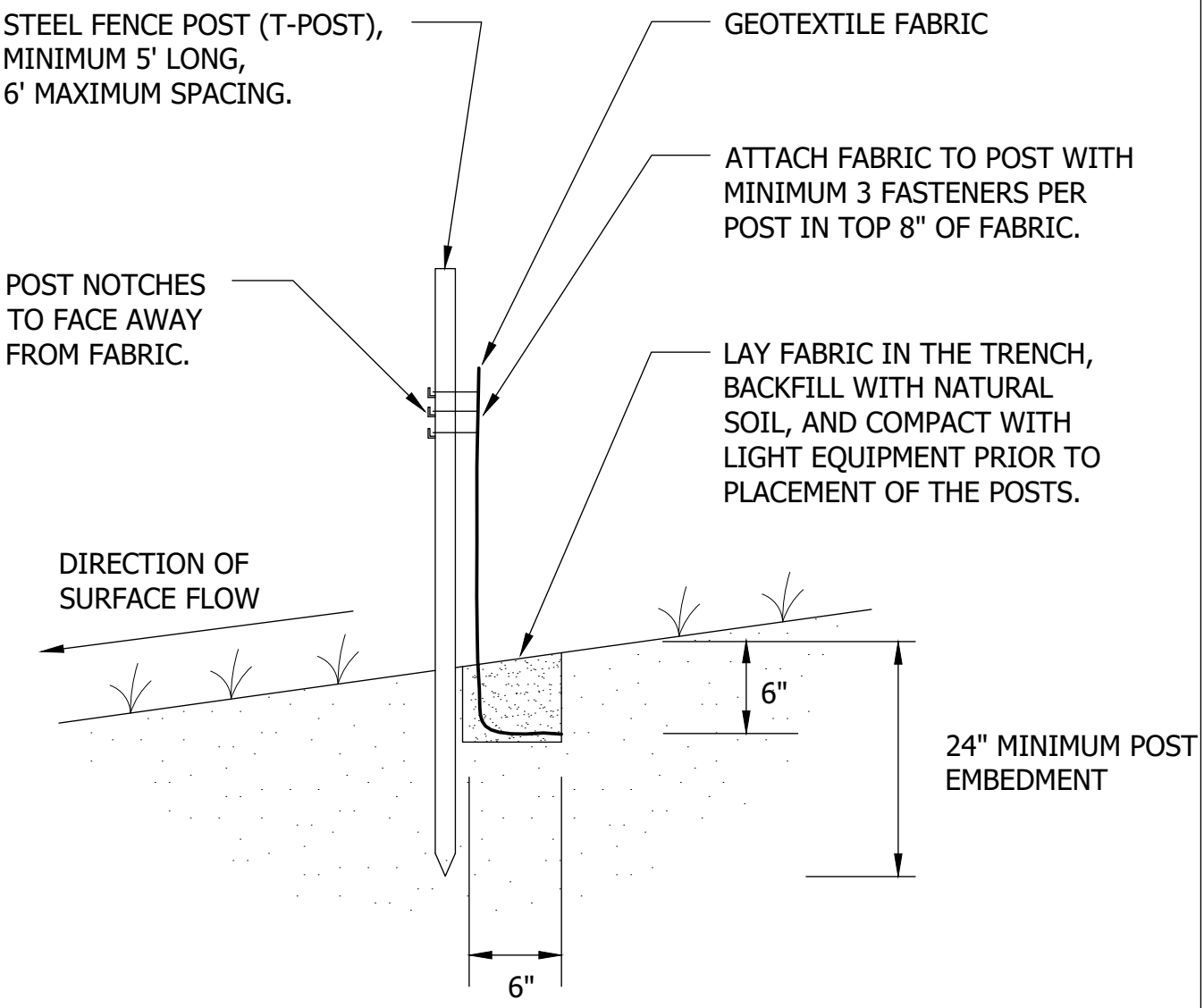


Cottage Grove
Where Pride and Prosperity Meet

# STANDARD DETAILS

HAND INSTALLED SILT FENCE

COTTAGE GROVE, MINNESOTA

JANUARY 2026

PLATE NO.
ERO-2

48_ERO2.DWG

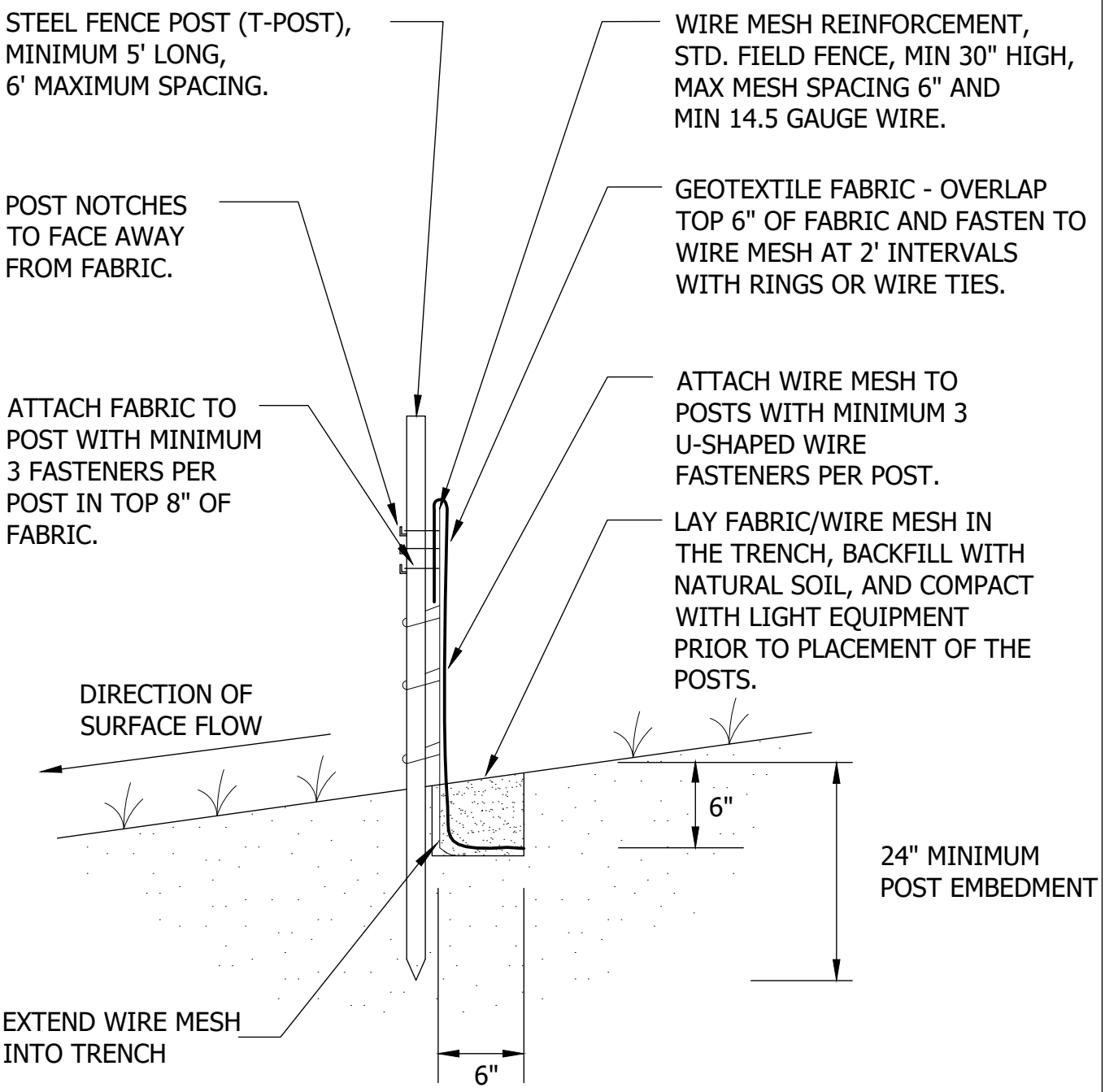


NOTE: MACHINE SLICED HEAVY DUTY SILT FENCE SHOULD BE USED WHEN DIRECTED BY THE CITY.

Cottage Grove
Where Pride and Prosperity Meet

STANDARD DETAILS

HEAVY DUTY SILT FENCE

COTTAGE GROVE, MINNESOTA

JANUARY 2026

PLATE NO.
ERO-3

48_ERO3.DWG

## PLAN VIEW

## I. SPACING REQUIREMENTS

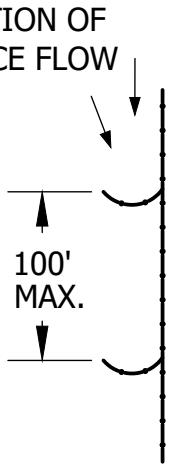


NOTE: SPACING DISTANCES WILL VARY, BUT ARE NOT TO EXCEED 100 FEET PER 0.25 ACRE OF DRAINAGE.

## II. SIZING REQUIREMENTS: J15, J25

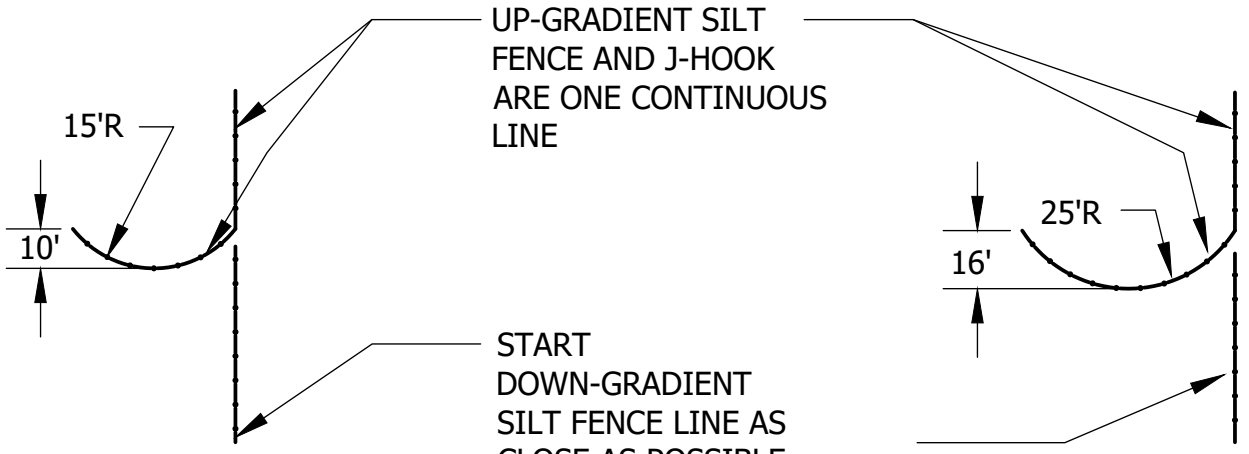


J15 - FOR CATCHMENT AREA <0.25 ACRES

J25 - FOR CATCHMENT AREA ≥0.25 ACRES

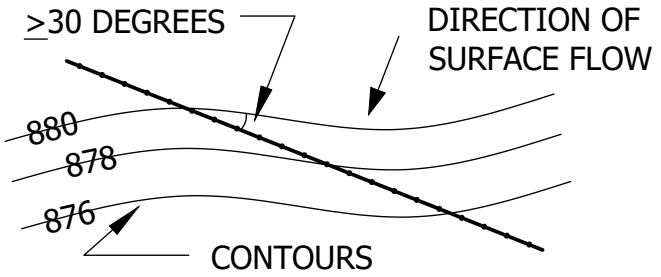


NOTE: J-HOOKS SHALL BE USED WHEN THE SILT FENCE IS INSTALLED AT AN ANGLE OF 30 DEGREES OR GREATER FROM PARALLEL TO THE CONTOURS.

Cottage Grove
Where Pride and Prosperity Meet

STANDARD DETAILS

J-HOOK SILT FENCE

COTTAGE GROVE, MINNESOTA

JANUARY 2026

PLATE NO.
ERO-4

48_ERO4.DWG

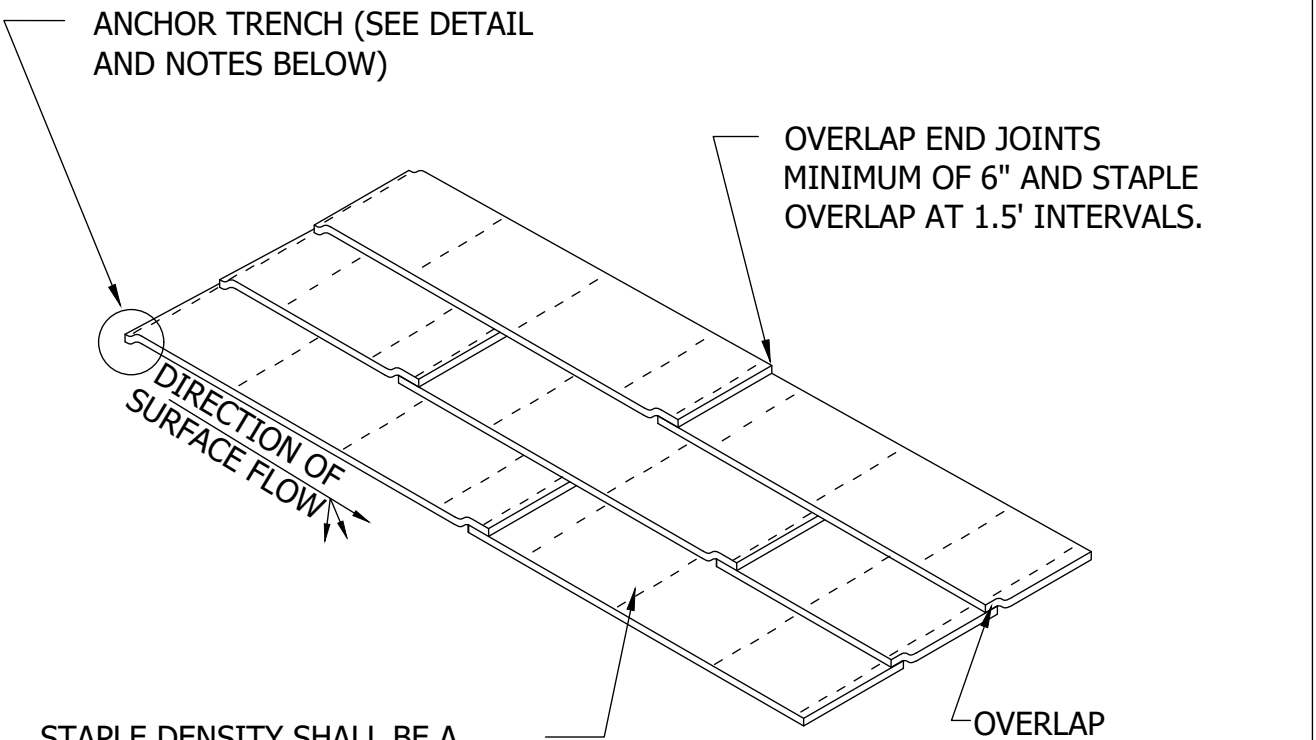


ANCHOR TRENCH

1. DIG 6" X 6" TRENCH
2. LAY BLANKET IN TRENCH
3. STAPLE AT 1.5' INTERVALS
4. BACKFILL WITH NATURAL SOIL AND COMPACT
5. BLANKET LENGTH SHALL NOT EXCEED 100' WITHOUT AN ANCHOR TRENCH

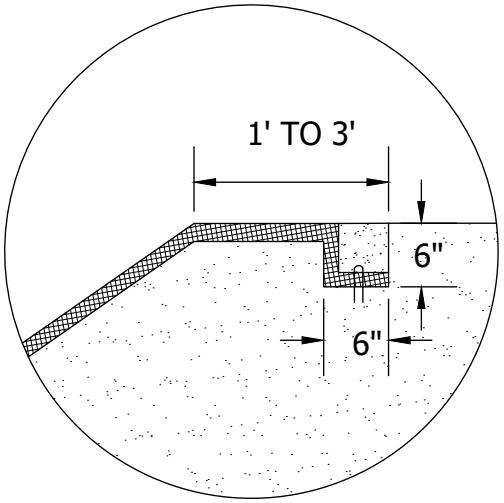


Cottage Grove
Where Pride and Prosperity Meet

# STANDARD DETAILS

ROLLED EROSION PREVENTION PRODUCTS INSTALLATION

COTTAGE GROVE, MINNESOTA

JANUARY 2026

PLATE NO.
ERO-5

48_ERO5.DWG

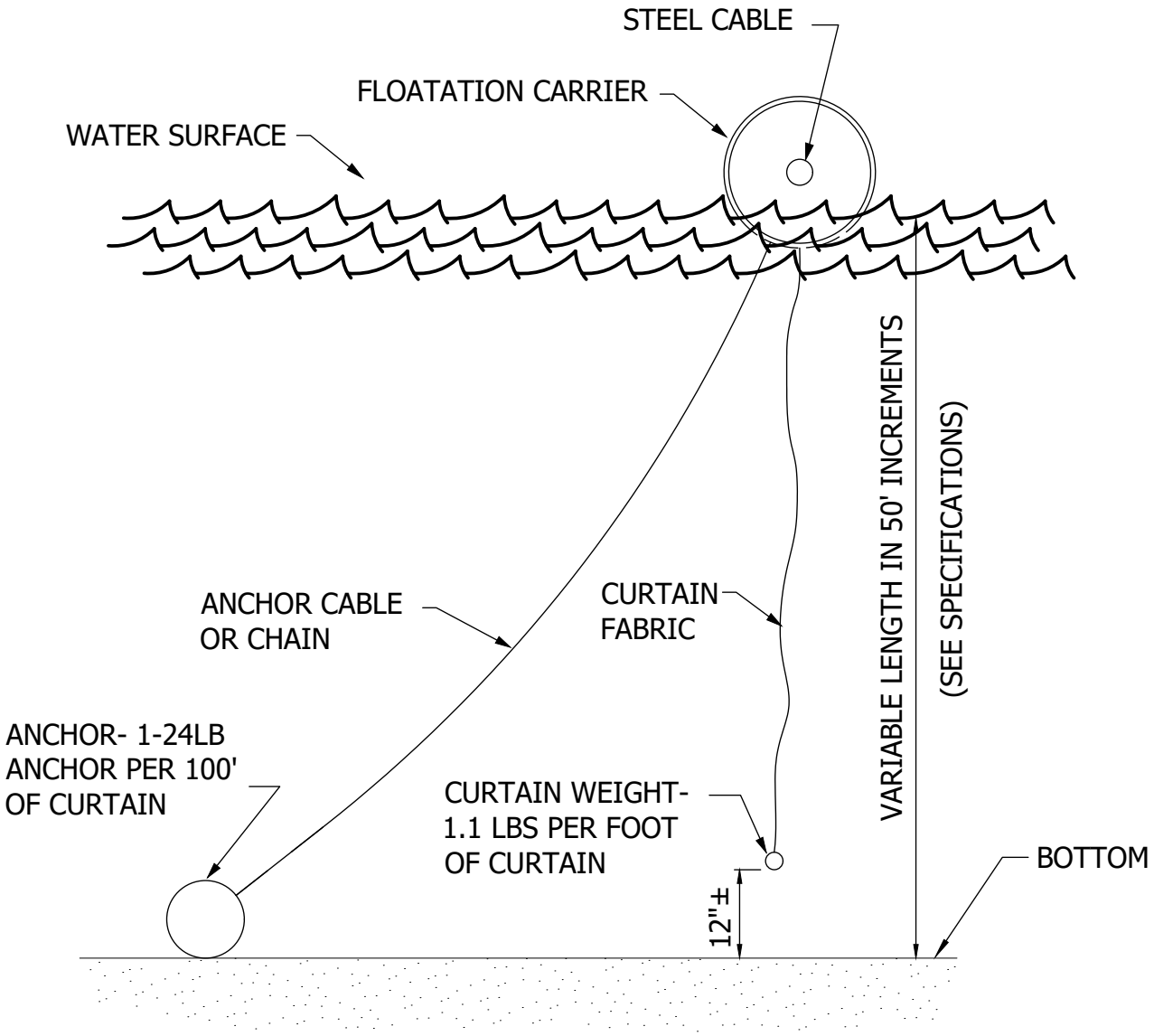


NOTE: DOUBLE SILT CURTAINS SHOULD BE SPACED 10' APART.

Cottage Grove
Where Pride and Prosperity Meet

STANDARD DETAILS

FLOATING SILT CURTAIN

COTTAGE GROVE, MINNESOTA

JANUARY 2026

PLATE NO.
ERO-6

48_ERO6.DWG

WOODEN LATH SHALL BE NAILED SECURELY TO THE POST MEMBER TO SECURE FILTER FABRIC.

2" X 4" HORIZONTAL MEMBERS CONTINUOUS AROUND TOP AND BOTTOM. FASTENED TO EACH POST USING 2-20D COMMON NAILS

2" X 4" X 2.5' LONG WOOD POSTS, 8 REQ'D.

GEOTEXTILE FABRIC

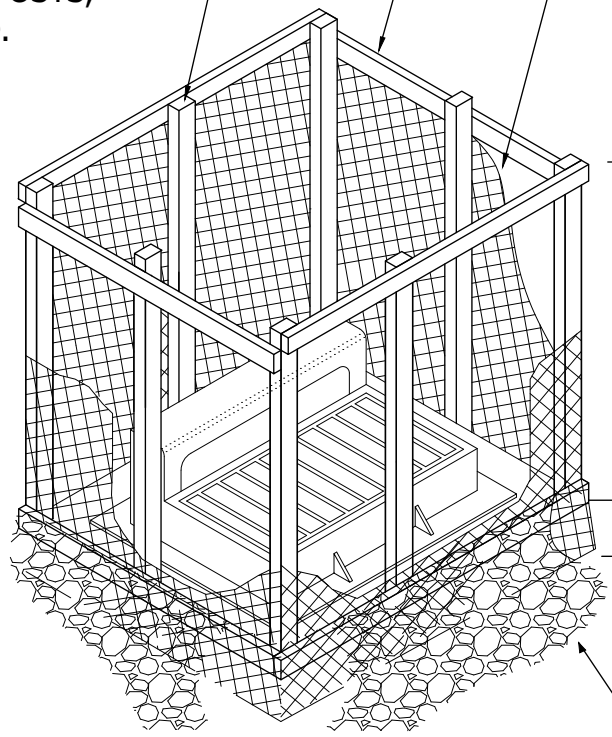


8-10" FABRIC FLAP EXTENDING BEYOND BOTTOM 2X4 - BURY UNDER ROCK TO PREVENT UNDERWASHING

1 1/2" WASHED ROCK 1' DEEP X 1' WIDE

NOTES:

CONTRACTOR SHALL CONSTRUCT SILT BOX TO FIT AROUND THE INLET STRUCTURE WITH 6" MINIMUM CLEARANCE TO EDGES OF STRUCTURE. SILT BOX TO BE PLACED ON AN EVEN SURFACE 6" BELOW STRUCTURE OPENING. TOP OF SILT BOX TO EXTEND 18" MINIMUM ABOVE EXISTING GRADE.

Cottage Grove

Where Pride and Prosperity Meet

# STANDARD DETAILS

INLET PROTECTION SILT BOX
FOR CATCH BASIN

COTTAGE GROVE, MINNESOTA

JANUARY 2026

PLATE NO.
ERO-7

48_ERO7.DWG

PLAN

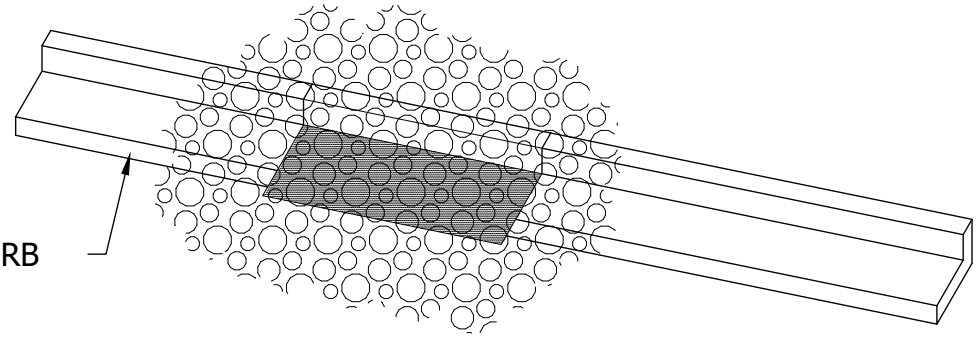


⟸ = DIRECTION OF SURFACE FLOW

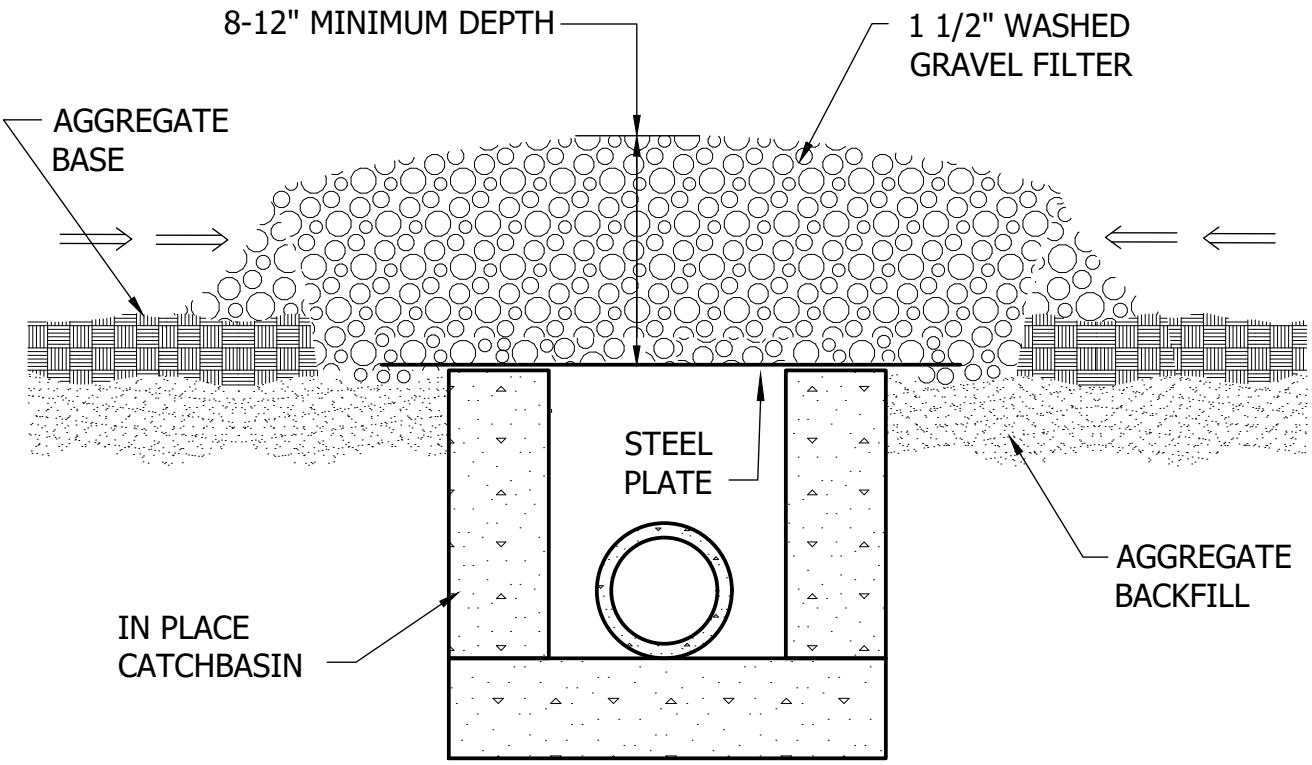


Cottage Grove
Where Pride and Prosperity Meet

## STANDARD DETAILS

INLET PROTECTION ROCK FILTER FOR CATCH BASIN

COTTAGE GROVE, MINNESOTA

JANUARY 2026

PLATE NO.
ERO-8

48_ERO8.DWG

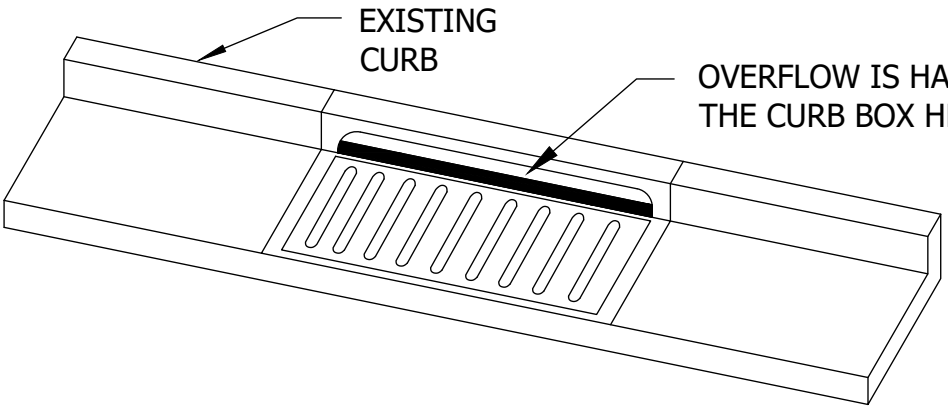


NOTE: USE WIMCO ROAD DRAIN CG-23 OR CG-3290-VB (DEPENDING ON CASTING TYPE) HIGH FLOW INLET PROTECTION CURB AND GUTTER MODELS, OR CITY APPROVED EQUAL.

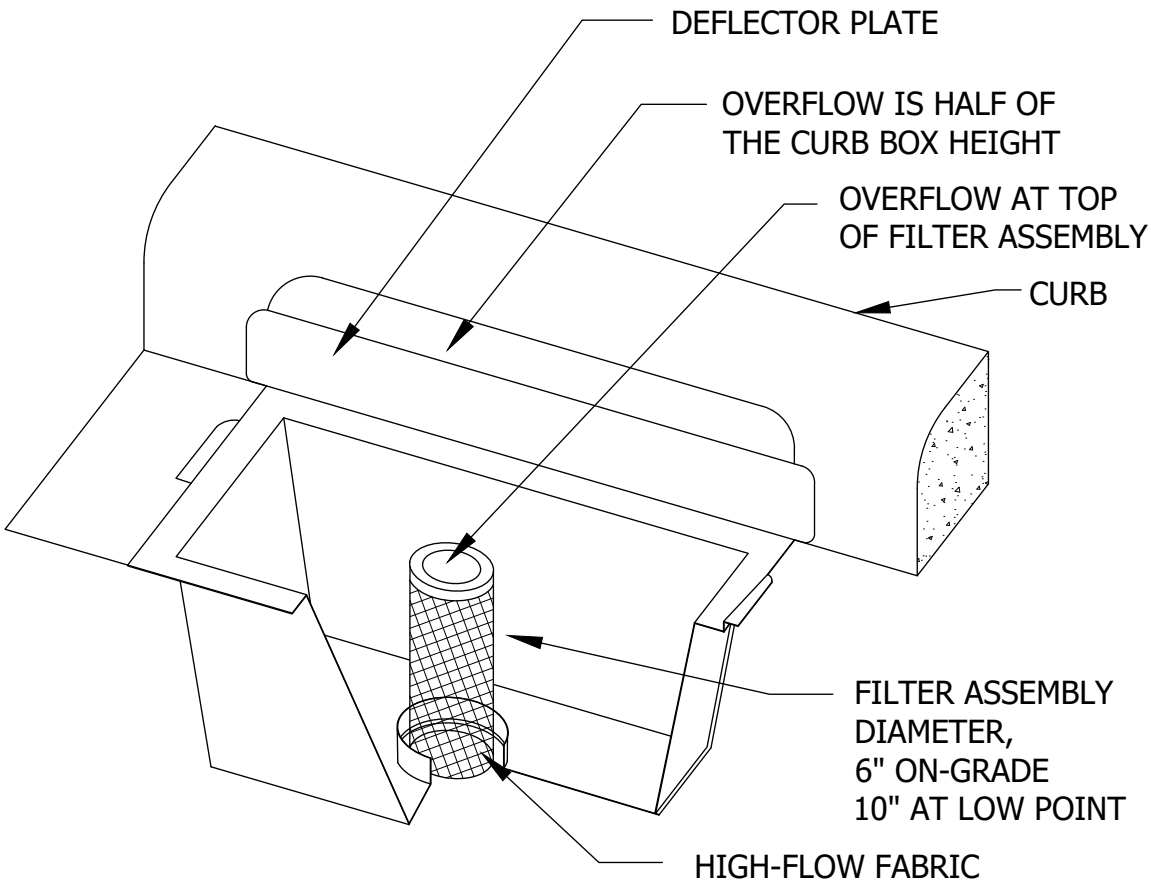


Cottage Grove
Where Pride and Prosperity Meet

STANDARD DETAILS

INLET PROTECTION CATCH BASIN INSERT

COTTAGE GROVE, MINNESOTA

JANUARY 2026

PLATE NO.
ERO-9

48_ERO9.DWG

WOODEN LATH SHALL BE NAILED SECURELY TO THE POST MEMBER TO SECURE FILTER FABRIC.

2" X 4" HORIZONTAL MEMBERS CONTINUOUS AROUND TOP AND BOTTOM. FASTENED TO EACH POST USING 2-20D COMMON NAILS

2" X 4" X 2.5' LONG WOOD POSTS, 8 REQ'D.

GEOTEXTILE FABRIC

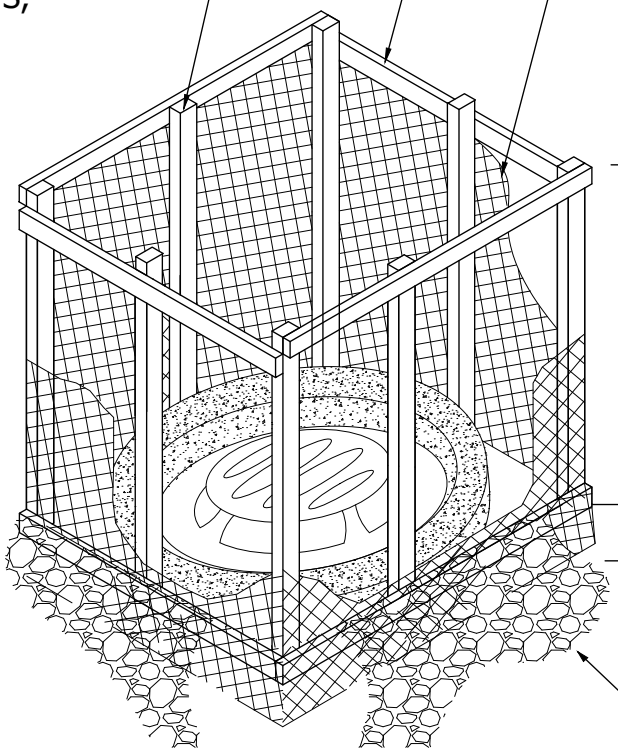


8-10" FABRIC FLAP EXTENDING BEYOND BOTTOM 2X4 - BURY UNDER ROCK TO PREVENT UNDERWASHING

1 1/2" WASHED ROCK 1' DEEP X 1' WIDE

NOTES:

CONTRACTOR SHALL CONSTRUCT SILT BOX TO FIT AROUND THE INLET STRUCTURE WITH 6" MINIMUM CLEARANCE TO EDGES OF STRUCTURE. SILT BOX TO BE PLACED ON AN EVEN SURFACE 6" BELOW STRUCTURE OPENING. TOP OF SILT BOX TO EXTEND 18" MINIMUM ABOVE EXISTING GRADE.

Cottage Grove

Where Pride and Prosperity Meet

STANDARD DETAILS

INLET PROTECTION SILT BOX FOR BEEHIVE CASTING

COTTAGE GROVE, MINNESOTA

JANUARY 2026

PLATE NO.

ERO-10

48_ERO10.DWG

REFER TO DETAIL PLATES FOR
SILT FENCE INSTALLATION METHODS

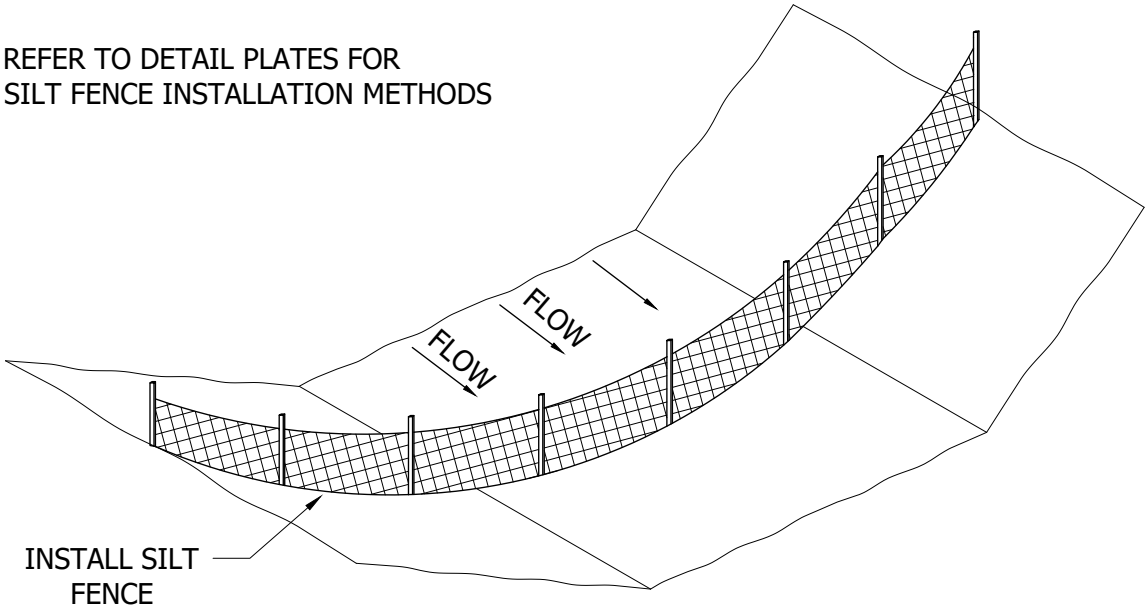


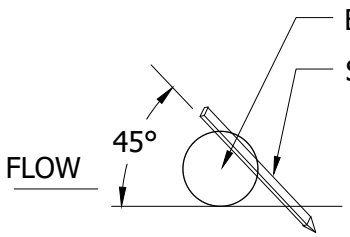


2" x 2" x 16" LONG WOODEN STAKES AT 1'-0" SPACING MINIMUM. STAKES SHALL BE DRIVEN THROUGH THE BACK HALF OF THE COMPOST LOG AT AN ANGLE OF 45° WITH THE TOP OF THE STAKE POINTING UPSTREAM.

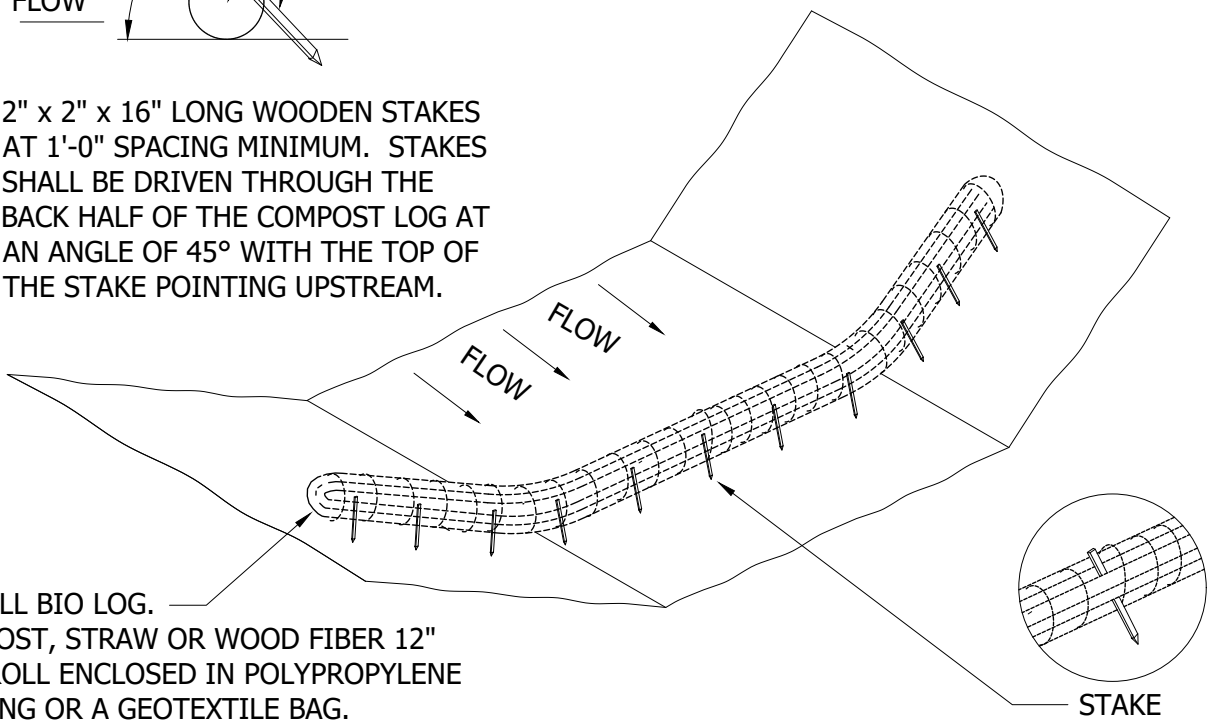


Cottage Grove
Where Pride and Prosperity Meet

# STANDARD DETAILS

FILTER BERMS

COTTAGE GROVE, MINNESOTA

JANUARY 2026

PLATE NO.
ERO-11

48_ERO11.DWG

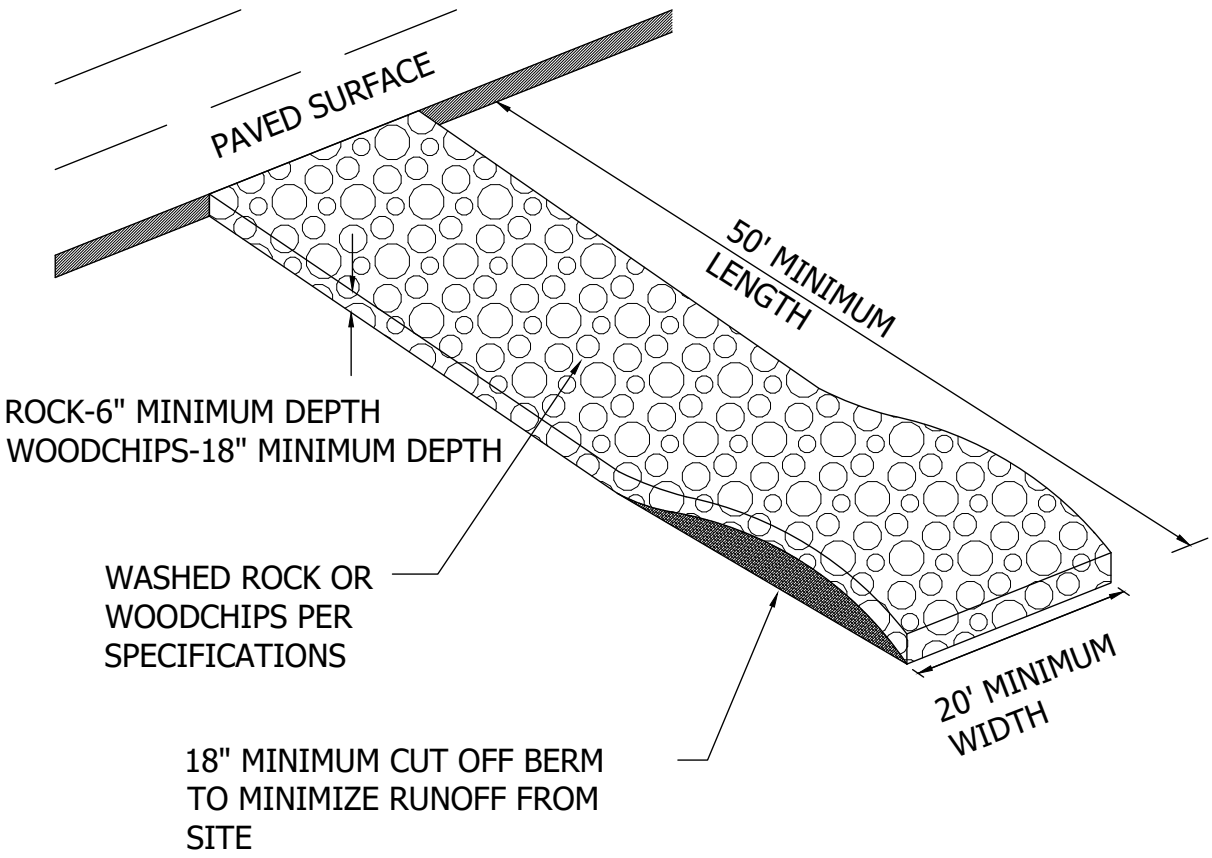


NOTES:

1. FILTER FABRIC SHALL BE PLACED UNDER ROCK OR WOODCHIPS TO STOP MUD MIGRATION THROUGH ROCK.
2. ENTRANCE MUST BE MAINTAINED REGULARLY TO PREVENT SEDIMENTATION TRACKING.

Cottage Grove
Where Pride and Prosperity Meet

STANDARD DETAILS

CONSTRUCTION ENTRANCE
ROCK AND WOODCHIP

COTTAGE GROVE, MINNESOTA

JANUARY 2026

PLATE NO.
ERO-12

48_ERO12.DWG

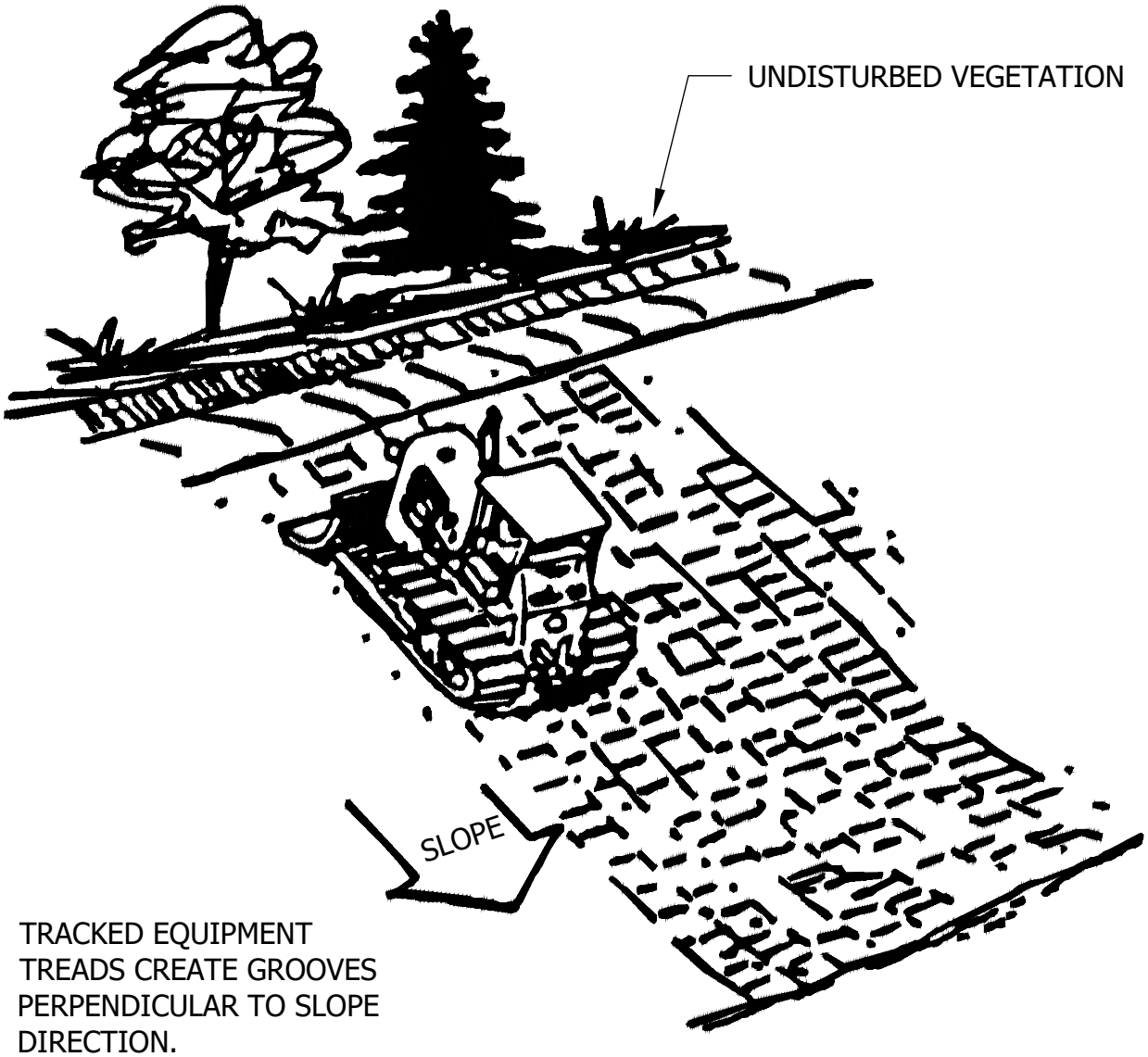


TRACKED EQUIPMENT TREADS CREATE GROOVES PERPENDICULAR TO SLOPE DIRECTION.

NOTE:
ALL SLOPES WITH A GRADE EQUAL TO OR STEEPER THAN 3:1 REQUIRE SLOPE TRACKING. SLOPES WITH A GRADE MORE GRADUAL THAN 3:1 REQUIRE SLOPE TRACKING IF THE STABILIZATION METHOD IS EROSION CONTROL BLANKET OR HYDROMULCH.

Cottage Grove
Where Pride and Prosperity Meet

STANDARD DETAILS

SLOPE TRACKING

COTTAGE GROVE, MINNESOTA

JANUARY 2026

PLATE NO.
ERO-13

48_ERO13.DWG

I. PLAN VIEW

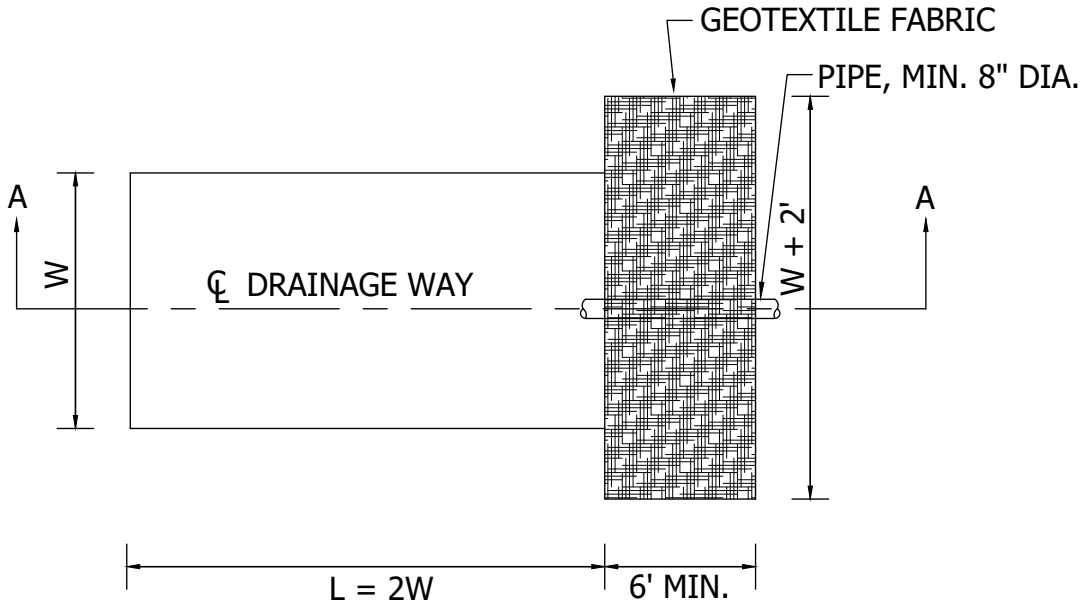


II. SECTION A-A

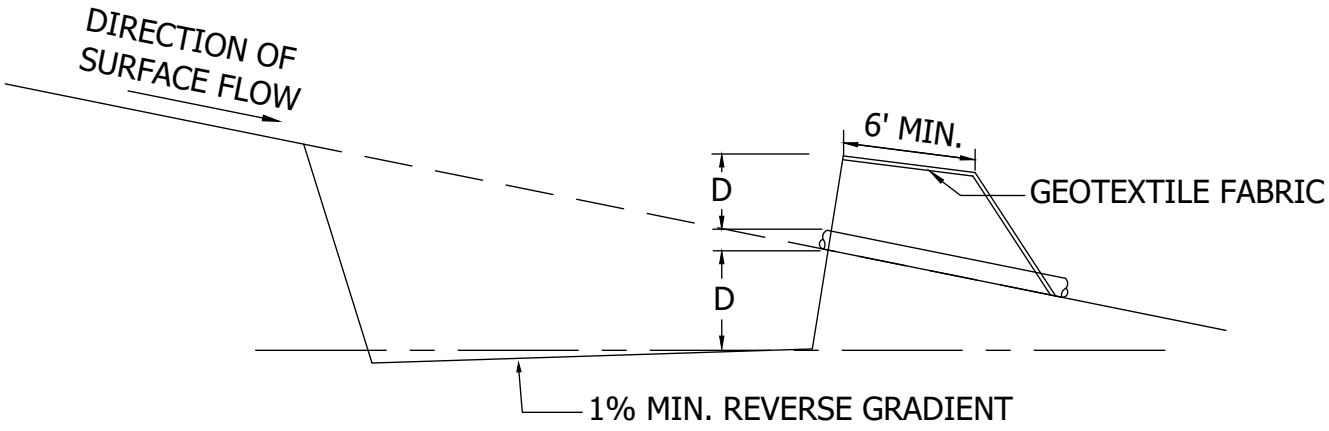


NOTE:
D=2' MIN, 4' MAX
W=10' MIN, 25' MAX
W(FT.)= 10 X DRAINAGE AREA (AC.)

Cottage Grove
Where Pride and Prosperity Meet

STANDARD DETAILS

TEMPORARY SEDIMENT TRAP/BASIN

COTTAGE GROVE, MINNESOTA

JANUARY 2026

PLATE NO.
ERO-14

48_ERO14.DWG

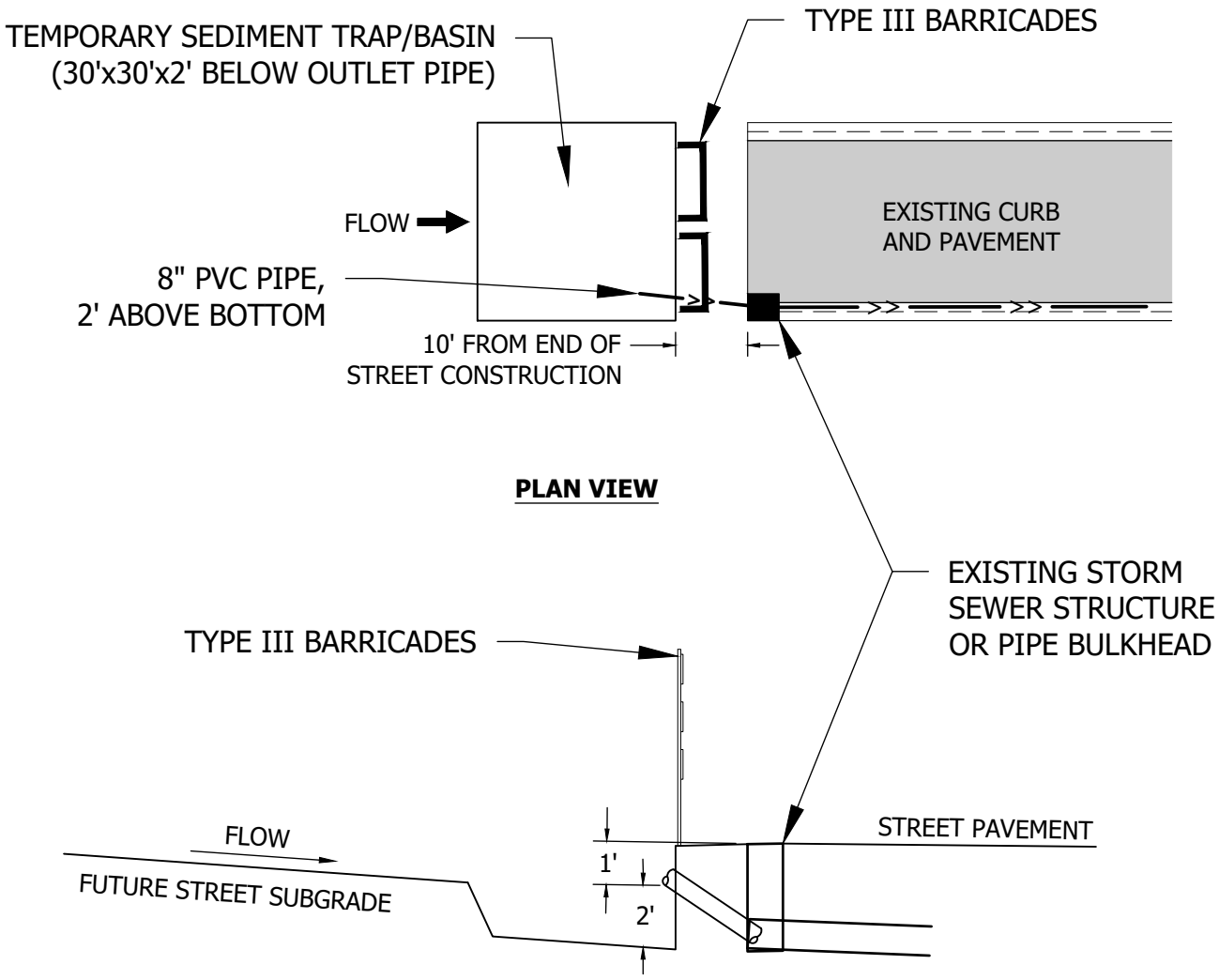


Cottage Grove
Where Pride and Prosperity Meet

# STANDARD DETAILS

TEMPORARY SEDIMENT TRAP/BASIN
ON FUTURE STREET SUBGRADE

COTTAGE GROVE, MINNESOTA

JANUARY 2026

PLATE NO.
ERO-15

48_ERO15.DWG

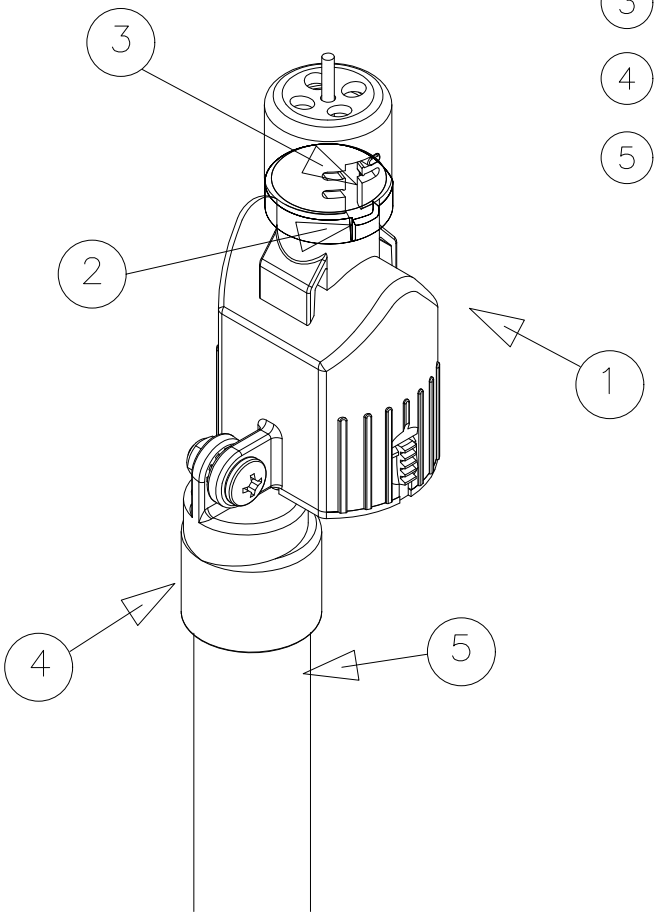


1. RAIN SENSOR, REFER TO PLAN FOR SENSOR LOCATION
2. VENT/DRY–OUT ADJUSTMENT
3. RAINFALL ADJUSTMENT
4. CONDUIT ADAPTER
5. 1/2" PVC WIRE CONDUIT; SEE NOTE 3

NOTES:

1. ALL ELECTRICAL WORK MUST CONFORM TO LOCAL CODES. REFER TO PRODUCT LITERATURE FOR ADDITIONAL INSTALLATION REQUIREMENTS.
2. MOUNT RAIN SENSOR TO LIGHT POLE, COORDINATE INSTALLATION WITH ELECTRICAL.
3. FOR CONDUIT AND WIRING, SEE SPECIFICATIONS

Cottage Grove
Where Pride and Prosperity Meet

# STANDARD DETAILS

RAIN SENSOR

COTTAGE GROVE, MINNESOTA

JANUARY 2026

PLATE NO.
IRR-1

48_IRR1.DWG

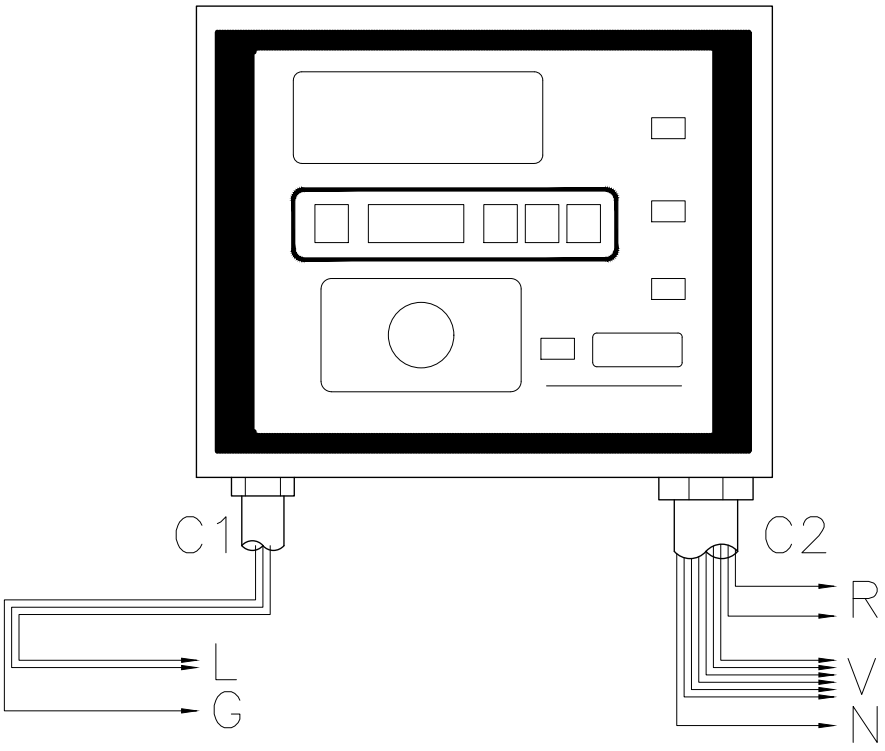


C1 CONDUIT.
C2 CONDUIT.
G GROUND WIRE (SEE SPECIFICATIONS).
L POWER SUPPLY WIRES (SEE SPECIFICATIONS).
N COMMON NEUTRAL WIRE.
R RAIN SENSOR WIRES.
V VALVE CONTROL WIRES: ONE PER VALVE, WITH EXTRAS TO MAIN LINE STUBS.

Cottage Grove
Where Pride and Prosperity Meet

STANDARD DETAILS

EXTERIOR CONTROLLER

COTTAGE GROVE, MINNESOTA

JANUARY 2026

PLATE NO.
IRR-2

48_IRR2.DWG

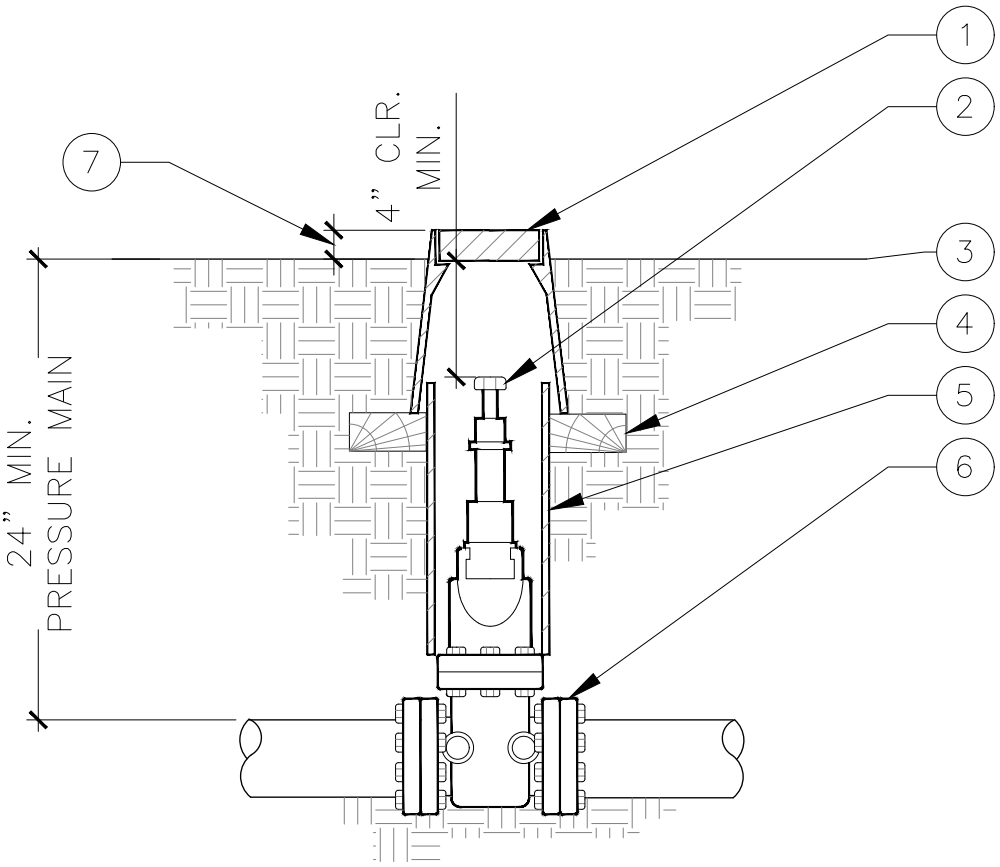


1. PLASTIC VALVE BOX AND LOCKING COVER W/ BOX EXTENSIONS AS REQUIRED. REFER TO SPECS. HEAT BRAND 'GV' ON LID.
2. GATE VALVE W/ OPERATING NUT, SEE IRRIGATION LEGEND FOR MANUFACTURER AND MODEL NUMBER.
3. FINISH GRADE BEFORE PLANTING.
4. STD. BRICK, TYP. 2 PLACES.
5. 6" PVC SLEEVE.
6. SCH. 80 PVC FLANGES, TYP. 2 PLACES.
7. KEEP FINISH GRADE BELOW VALVE BOX LID:
   1½" IN SOD.
   3" IN PLANTER BED.
8. INSTALL GATE VALVES A MIN. OF 24" FROM STRUCTURES OR HARDSCAPING.
9. INSTALL GATE VALVES IN PLANTING BEDS WHEREVER POSSIBLE.
10. INSTALL VALVE BOX SO THAT TOP OF VALVE BOX IS FLUSH W/ ADJACENT HARDSCAPING.
11. REFER TO SPECS. AND PLAN SHEETS FOR MORE INFORMATION.

Cottage Grove
Where Pride and Prosperity Meet

STANDARD DETAILS

GATE VALVE

COTTAGE GROVE, MINNESOTA

JANUARY 2026

PLATE NO.
IRR-3

48_IRR3.DWG

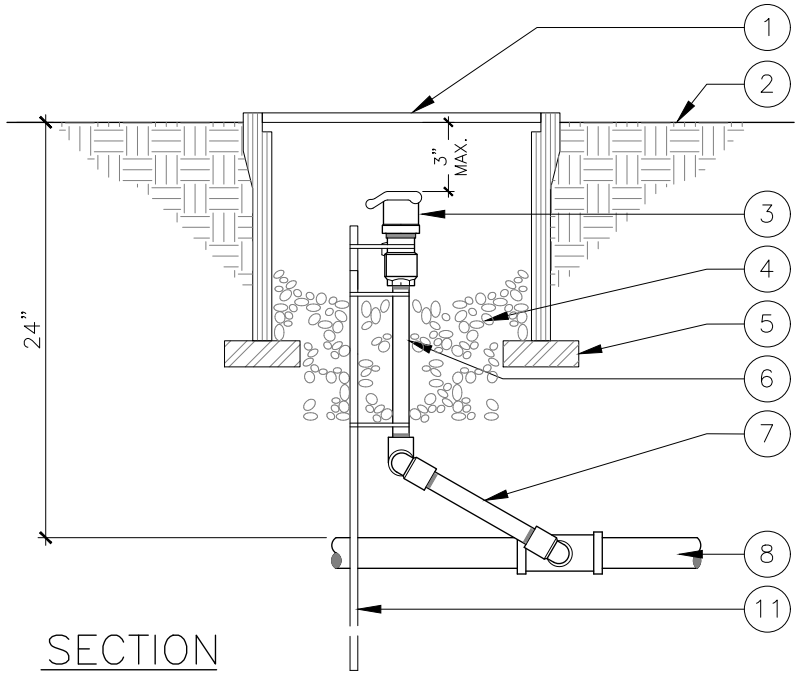


SECTION

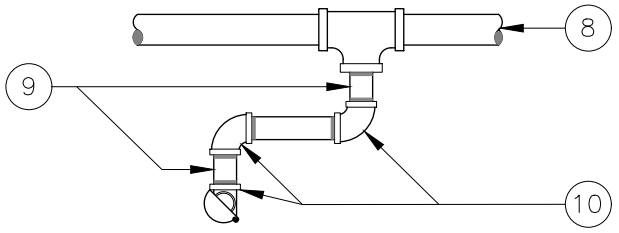


PLAN

1. PLASTIC VALVE BOX (SEE SPECS.) W/ LOCK BOLT & Q.C. HEAT BRANDED ON COVER.
2. FINISH GRADE BELOW VALVE BOX LID (1/2" SEED, 1½" SOD, 2" IN PLANTER BED.
3. QUICK COUPLING VALVE AS SPECIFIED.
4. PEA GRAVEL: 6" DEEP BELOW QUICK COUPLING VALVE.
5. BRICK: 2 PLACES.
6. 3/4" SCH. 80 PVC NIPPLE.
7. 3/4" SCH. 80 PVC 6" LONG NIPPLE.
8. PVC MAIN LINE.
9. 3/4" X 3" SCH. 80 NIPPLE.
10. 3/4" SCH. 80 PVC 90° ELL.
11. 2"X2"X1/40" ANGLE IRON (36" LONG) W/ STAINLESS STEEL SCREW CLAMPS MIN. (3) PLACES.
12. USE TEFLON TAPE ON ALL THREADED CONNECTIONS.

Cottage Grove
Where Pride and Prosperity Meet

# STANDARD DETAILS

QUICK COUPLING VALVE

COTTAGE GROVE, MINNESOTA

JANUARY 2026

PLATE NO.
IRR-4

48_IRR4.DWG

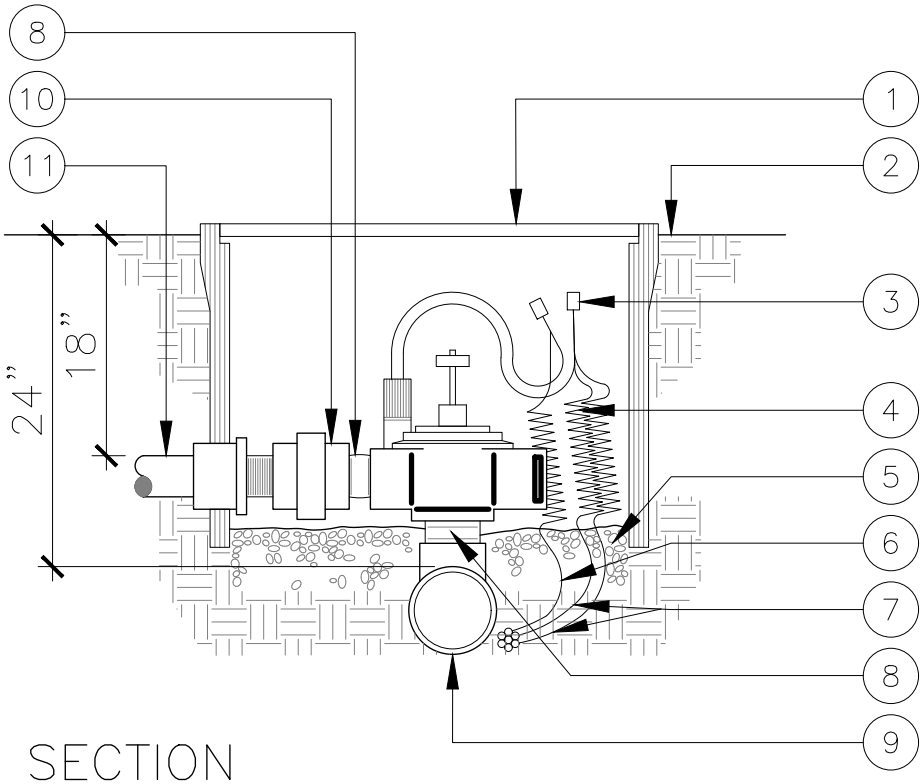


SECTION

1. AMETEK OR EQUAL PLASTIC VALVE BOX WITH BOLT DOWN LID.
2. FINISH GRADE 1" BELOW LID.
3. UL LISTED WATERPROOF CONNECTORS.
4. COILS: LEAVE EXCESS 2'–0" COILS IN EACH VALVE BOX. WRAP WIRE AROUND 1/2" PIPE 15 TIMES TO CREATE COILS.
5. 3" LAYER OF PEA GRAVEL.
6. CONTROL WIRE FROM CONTROLLER.
7. COMMON WIRES.
8. SCHEDULE 80 PVC NIPPLE.
9. PVC MAIN LINE.
10. PVC UNION.
11. PVC LATERAL TO SPRINKLER HEADS.
12. ALL WIRE TO BE INSTALLED AS PER LOCAL CODE.

Cottage Grove
Where Pride and Prosperity Meet

# STANDARD DETAILS

REMOTE CONTROL VALVE

COTTAGE GROVE, MINNESOTA

JANUARY 2026

PLATE NO.
IRR-5

48_IRR5.DWG

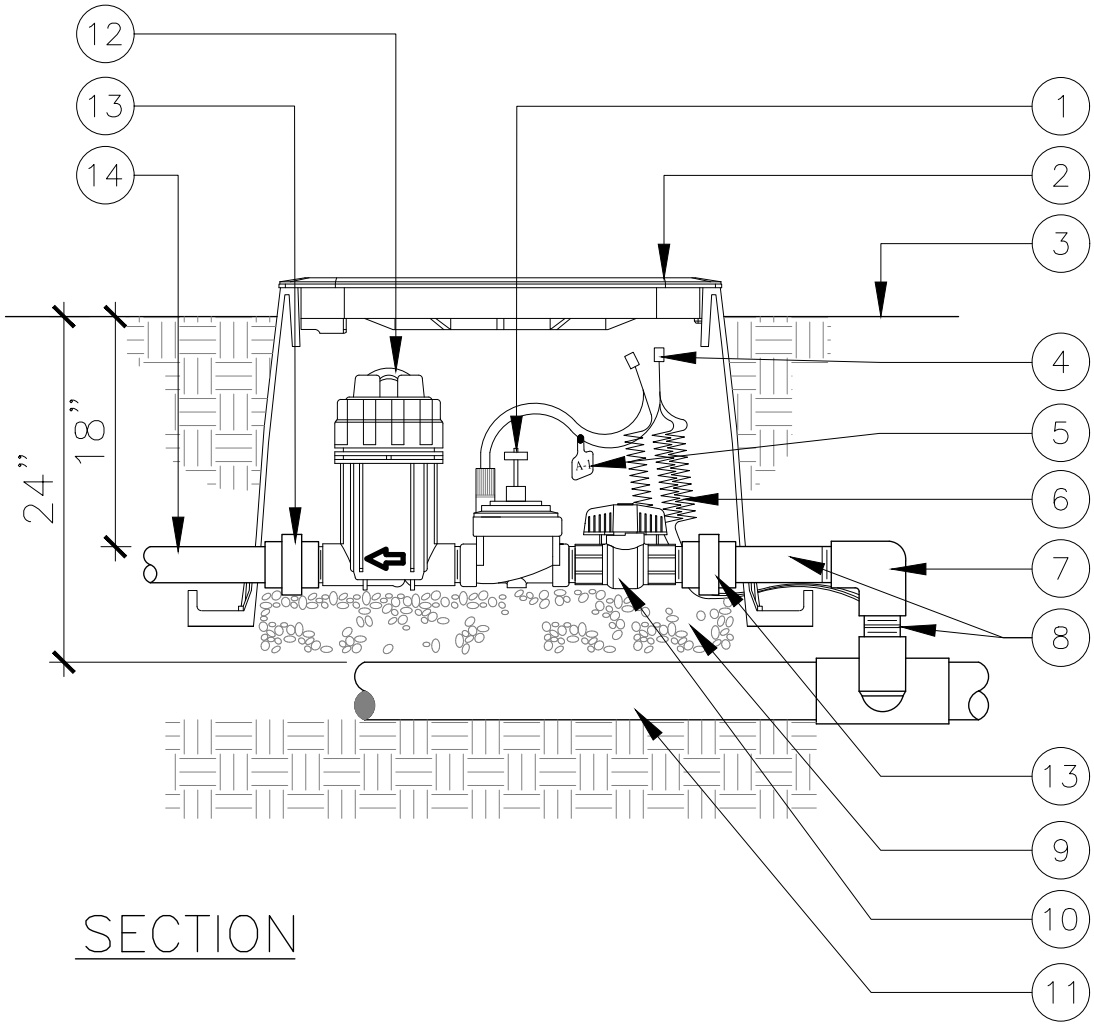


SECTION

1. REMOTE CONTROL VALVE.
2. PLASTIC VALVE BOX WITH BOLT DOWN LID. HEAT BRAND VALVE NUMBER ON LID.
3. FINISH GRADE: HOLD 2" BELOW LID IN PLANTER AREAS.
4. UL LISTED WATERPROOF CONNECTORS.
5. STAMPED VALVE NUMBER TAG.
6. COILS: LEAVE EXCESS 2'–0" COILS IN EACH VALVE BOX. WRAP WIRE AROUND 1/2" PIPE 15 TIMES TO CREATE COILS.
7. PVC SCHEDULE 40 ELL.
8. PVC SCHEDULE 80 NIPPLE (LENGTH AS REQUIRED).
9. 3" LAYER OF PEA GRAVEL.
10. BALL VALVE.
11. PVC MAIN LINE.
12. DRIP FILTER.
13. PVC UNION.
14. PVC LATERAL TO DRIP ZONE.
15. ALL WIRE TO BE INSTALLED AS PER LOCAL CODE.

Cottage Grove
Where Pride and Prosperity Meet

# STANDARD DETAILS

DRIP REMOTE CONTROL VALVE

COTTAGE GROVE, MINNESOTA

JANUARY 2026

PLATE NO.
IRR-6

48_IRR6.DWG

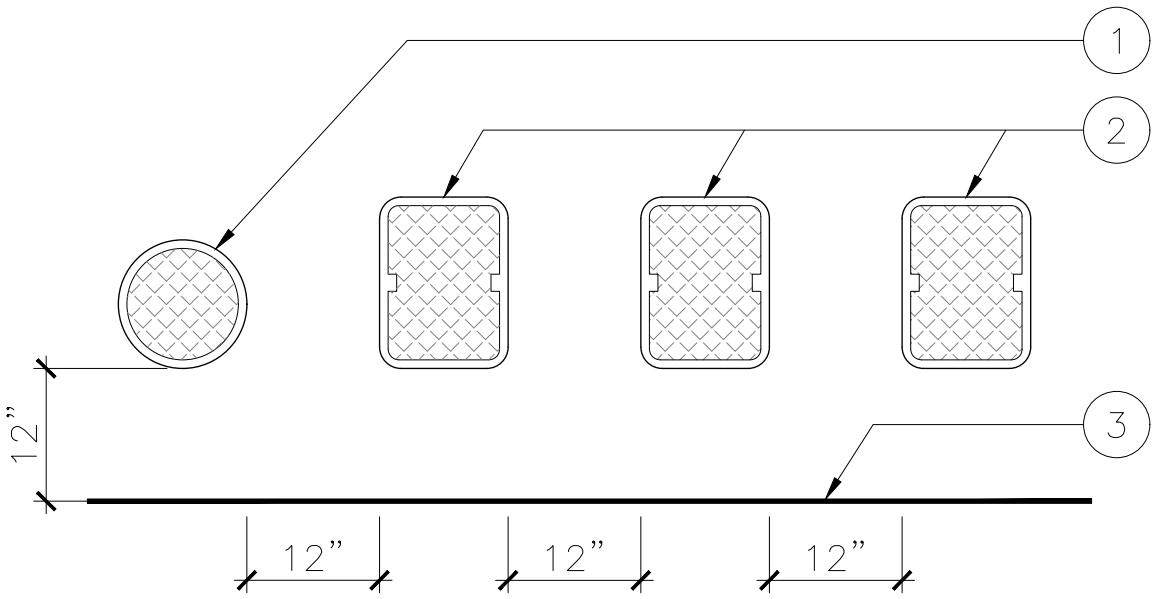


1. QUICK COUPLING VALVE IN ROUND VALVE BOX.
2. CENTER VALVE BOX OVER REMOTE CONTROL VALVE TO FACILITATE SERVICING VALVE.
3. EDGE OF PLANTER.
4. SET REMOTE CONTROL VALVE ASSEMBLY IN GROUNDCOVER/ SHRUB AREA WHERE POSSIBLE. INSTALL IN LAWN ONLY IF GROUND COVER DOES NOT EXIST ADJACENT TO LAWN.
5. SET BOXES PARALLEL TO EACH OTHER AND PERPENDICULAR TO EDGE.
6. AVOID HEAVILY COMPACTING SOIL AROUND VALVE BOXES TO PREVENT COLLAPSE OF DEFORMATION OF VALVE BOX SIDES.

Cottage Grove
Where Pride and Prosperity Meet

STANDARD DETAILS

VALVE BOX LAYOUT

COTTAGE GROVE, MINNESOTA

JANUARY 2026

PLATE NO.
IRR-7

48_IRR7.DWG

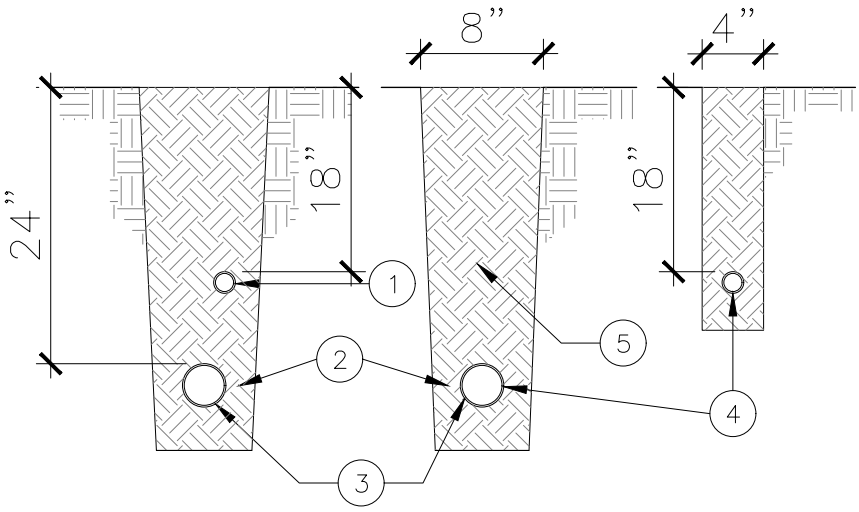


## SECTION

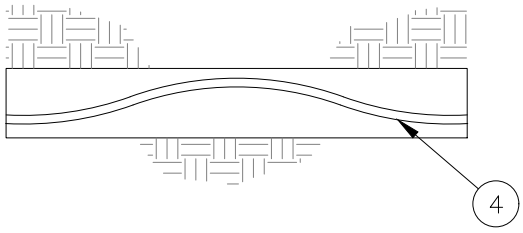


## PLAN

1. IRRIGATION LATERAL.
2. WIRING: TAPE AND BUNDLE WIRING AT 10'–0" INTERVALS. COMMON TRENCHING OF IRRIGATION PIPE AND REMOTE CONTROL VALVE WIRING TO BE DONE WHERE EVER POSSIBLE (INSTALL TRACE WIRE ALONG ALL MAIN LINE PIPE THAT DOES NOT HAVE CONTROL WIRES ADJACENT TO PIPE).
3. MAIN LINE: ALL MAIN LINE TO BE INSTALLED IN ACCORDANCE WITH MANUFACTURER'S SPECIFICATIONS. MAINTAIN MIN. 4" SPACE BETWEEN PARALLEL PIPE LINES AND 6" VERTICAL SPACE BETWEEN MAIN LINE AND LATERAL LINES. WIRING AND MAIN LINE TO BE AT SAME MIN. DEPTH OF 18".
4. ALL PVC PIPE TO BE SNAKED IN TRENCHED AS SHOWN.
5. BACKFILL, SEE SPECS.
6. ALL PIPING UNDER PAVING SHALL BE SLEEVED.

Cottage Grove
Where Pride and Prosperity Meet

STANDARD DETAILS

TRENCHING

COTTAGE GROVE, MINNESOTA

JANUARY 2026

PLATE NO.
IRR-8

48_IRR8.DWG

STEP 1: STRIP WIRES 1/2" FROM ENDS.

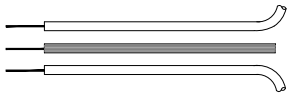

STEP 2: APPLY SCOTCHLOK Y SPRING CONNECTOR IN A CLOCKWISE DIRECTION.

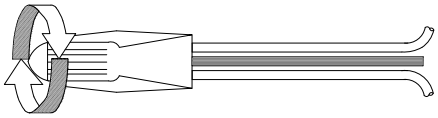

STEP 3: INSERT SPLICE TO BOTTOM OF GEL–FILLED TUBE. CHECK TO MAKE SURE CONNECTOR HAS BEEN PUSHED PAST LOCKING FINGERS AND IS SEATED AT BOTTOM OF TUBE.

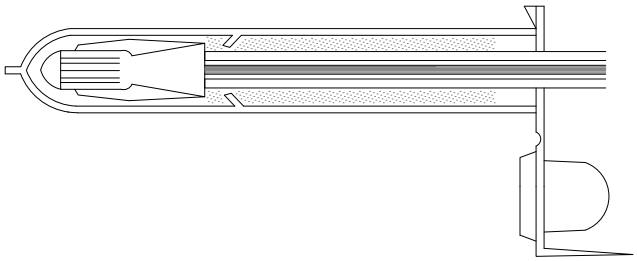

STEP 4: POSITION WIRES IN WIRE CHANNELS AND CLOSE INSULATOR TUBE COVER.

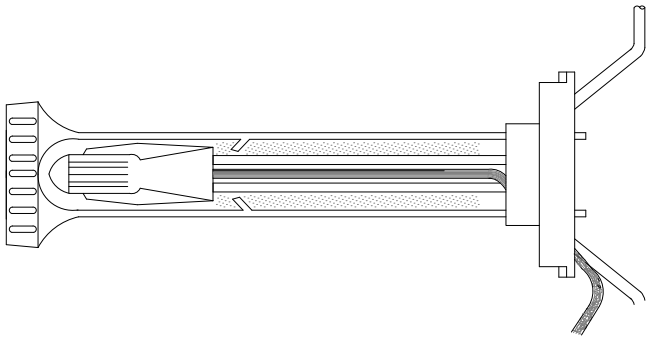

Cottage Grove

Where Pride and Prosperity Meet

# STANDARD DETAILS

WATERPROOF CONNECTOR

COTTAGE GROVE, MINNESOTA

JANUARY 2026

PLATE NO.

IRR-9

48_IRR9.DWG

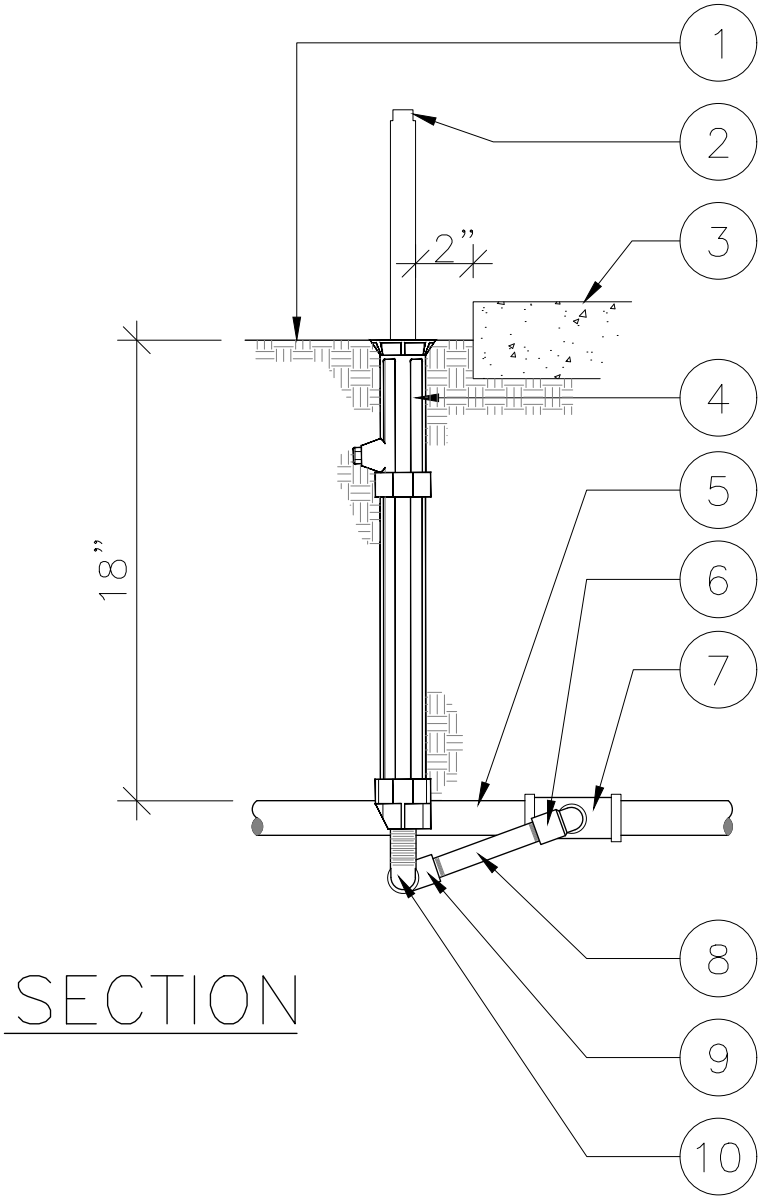


SECTION

1. FINISH GRADE.
2. NOZZLE.
3. CURB, WALK, HEADER OR WALL.
4. POP–UP SPRAY BODY PER IRRIGATION PLAN. SET HEAD FLUSH WITH FINISH GRADE.
5. PVC LATERAL LINE.
6. SCH. 40 PVC STREET 90° ELL.
7. SCH. 40 PVC TEE.
8. SCH. 80 PVC NIPPLE (6" LONG).
9. MARLEX 90° STREET ELL.
10. MARLEX 90° ELL.
11. LOCATE HEAD 2" FROM WALKS, CURBS, PAVING, MOWSTRIPS OR HEADER.
12. USE TEFLON TAPE ON ALL MALE THREADS (EXCEPT MARLEX FITTINGS).

Cottage Grove
Where Pride and Prosperity Meet

## STANDARD DETAILS

POP-UP SPRINKLER

COTTAGE GROVE, MINNESOTA

JANUARY 2026

PLATE NO.
IRR-10

48_IRR10.DWG

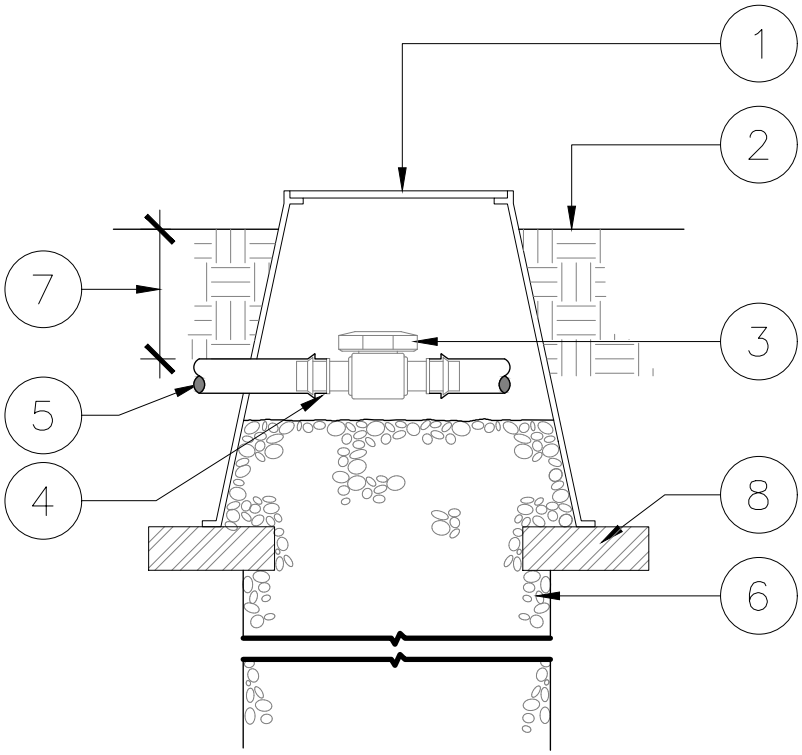


# SECTION

1. 10" ROUND PLASTIC VALVE BOX.
2. FINISH GRADE: HOLD 1" BELOW TOP OF LID.
3. MANUAL FLUSH/SHUT–OFF VALVE.
4. BARB FITTING.
5. DRIP LINE.
6. 8" DIA. x 24" DEEP MIN. ROCK SUMP FILLED W/ 3/4" CRUSHED ROCK.
7. DRIPPER LINE DEPTH.
8. BRICK SUPPORT (TYP. 3 PLACES).

Cottage Grove
Where Pride and Prosperity Meet

STANDARD DETAILS

MANUAL FLUSH VALVE

COTTAGE GROVE, MINNESOTA

JANUARY 2026

PLATE NO.
IRR-11

48_IRR11.DWG

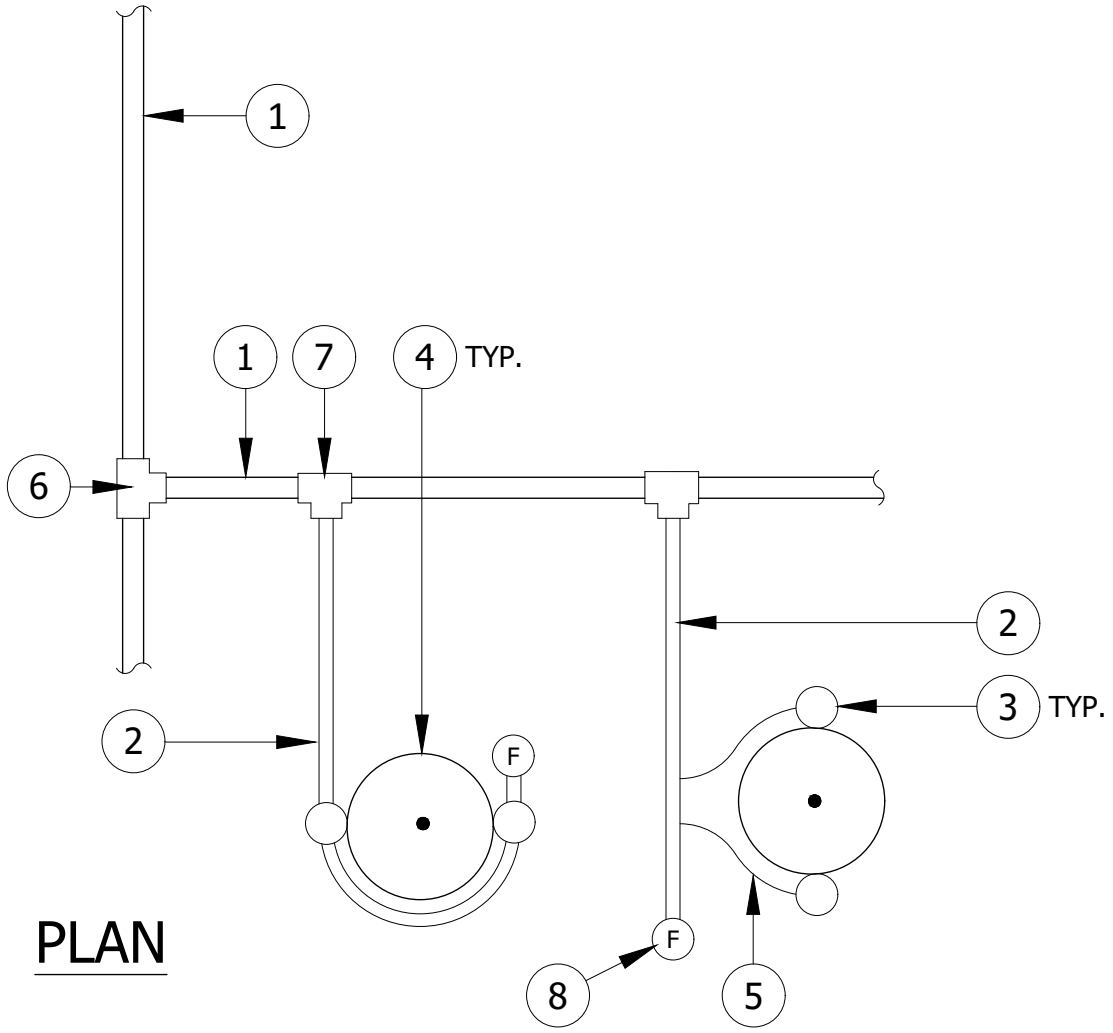


PLAN

KEY NOTES

1. SALCO FLEXIBLE PVC LINE, 3/4" DIA.
2. EMITTER SUB-LATERAL (TYP) PEPCO FLEXIBLE DRIP DISTRIBUTION TUBE, 1/2" DIA., 3'-0" MAXIMUM LENGTH. 150' OR 200 GPH MAXIMUM FROM ANY ONE CONNECTION AT FLEXIBLE PVC.
3. SINGLE-PORT DRIP EMITTER, SEE IRRIGATION LEGEND.
4. SHRUB OR TREE ROOT BALL.
5. 1/4" DISTRIBUTION TUBE CONNECTED WITH TRANSFER BARBS, 3'-0" MAXIMUM LENGTH.
6. PVC TEES, SOLVENT WELD.
7. INSERT NO BARBED CONNECTORS INTO FLEXIBLE PVC LINES, USE PVC TEES AT INDIVIDUAL PLANTS.
8. FLUSHING VALVE IN VALVE BOX, TYPICAL.

GENERAL NOTES

a. EMITTERS SHALL BE EQUALLY SPACED AND LOCATED TO DIRECT WATER FLOW TO THE PERIMETER OF THE PLANT ROOT BALL.
b. LOCATE EMITTERS UPHILL OF PLANT CENTER.
c. USE CONNECTORS SPECIFIED BY TUBE MANUFACTURER.
d. ANCHOR DRIP TUBE TO MAINTAIN EMITTER LOCATION IN RELATION TO PLANT, 8'-0" ON CENTER MAXIMUM.

Cottage Grove
Where Pride and Prosperity Meet

STANDARD DETAILS

DRIP IRRIGATION LAYOUT

COTTAGE GROVE, MINNESOTA

JANUARY 2026

PLATE NO.
IRR-12

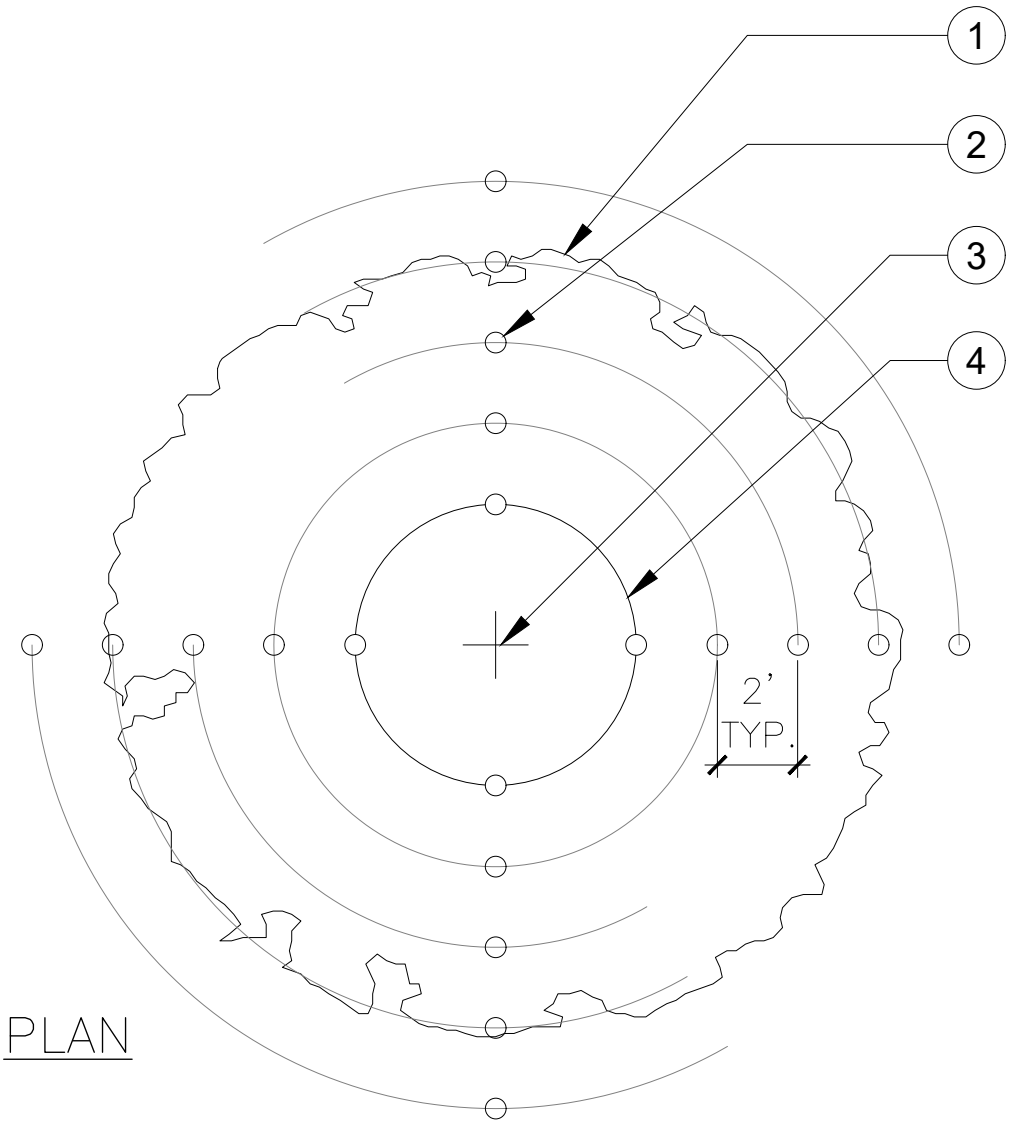


PLAN

NOTES:
1. SHRUB OR TREE CANOPY.
2. DRIP EMITTER, TYP.
3. CENTER OF SHRUB OR TREE.
4. EDGE OF ROOTBALL.
5. THIS IS A SUGGESTED EMITTER LAYOUT PLAN. ACTUAL LAYOUT MAY VARY DEPENDING ON SURROUNDING FEATURES. THE INTENT IS TO PROVIDE WATER FOR FUTURE ROOT GROWTH.
6. ADJACENT TREES AND SHRUBS MAY SHARE THE SAME EMITTER WHERE PATTERNS OVERLAP.
7. BEGIN PLACEMENT OF EMITTERS ADJACENT TO ROOTBALL OF PLANT AND WORK OUTWARD IN ALL DIRECTIONS UNTIL THE REQUIRED NUMBER OF EMITTERS PER PLANT IS OBTAINED. SEE IRRIGATION LEGEND FOR NUMBER OF EMITTERS REQUIRED.
8. KEEP ALL EMITTERS 18" FROM ANY CURB, WALK, OR OTHER PLANTER EDGE AND 36" FROM ANY BUILDING OR STRUCTURE.

Cottage Grove
Where Pride and Prosperity Meet

# STANDARD DETAILS

DRIP EMITTER SPACING

COTTAGE GROVE, MINNESOTA

JANUARY 2026

PLATE NO.
IRR-13

48_IRR13.DWG

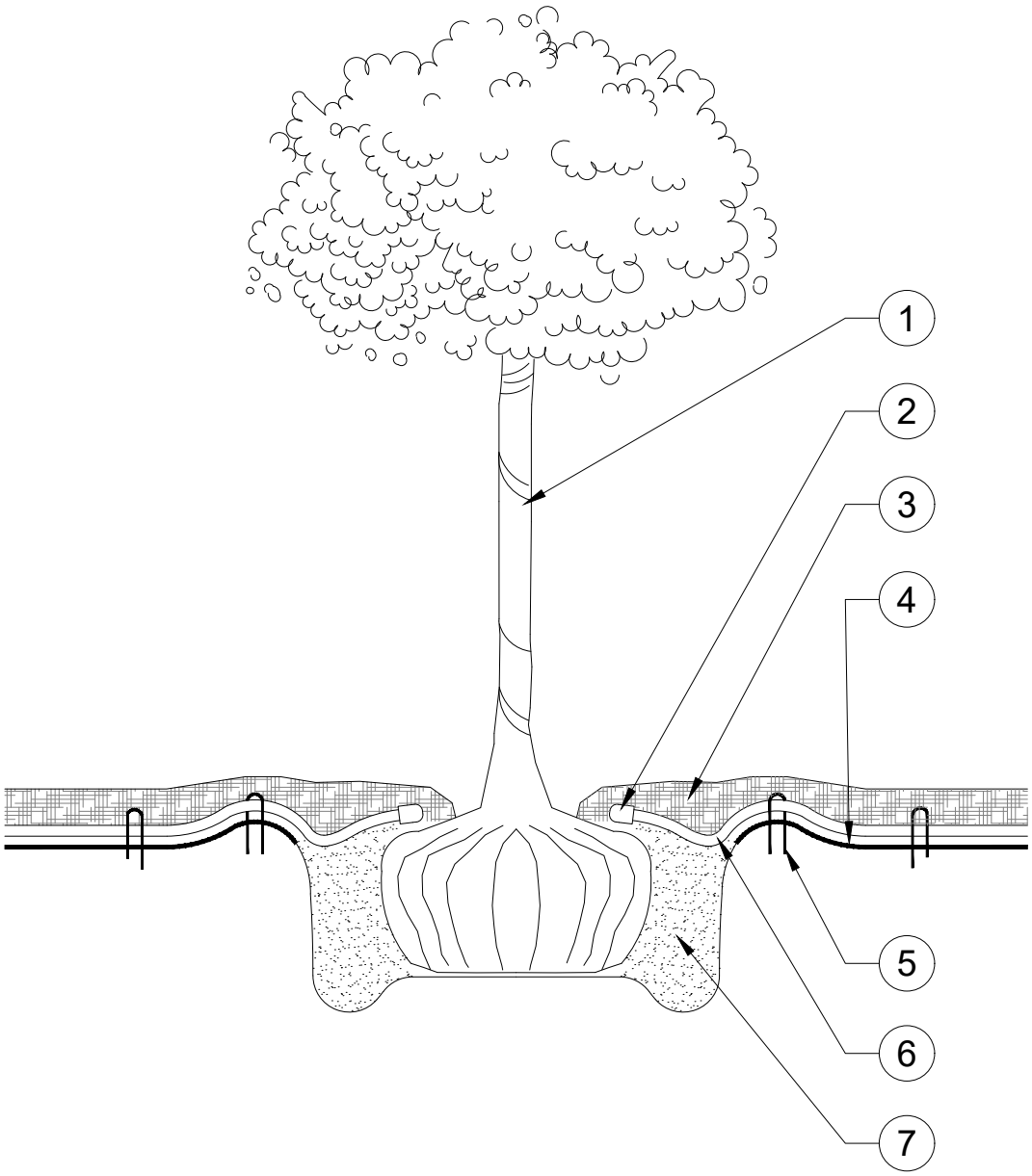


1. TREE OR SHRUB.
2. BUG CAP AT END OF DRIP TUBING, TYP.
3. MULCH, SEE SPECIFICATIONS.
4. FINISH GRADE.
5. 8" STEEL STAKES PLACED AT 5' O.C.
6. 1/4" DRIP TUBING.
7. PLANT PIT.

Cottage Grove
Where Pride and Prosperity Meet

# STANDARD DETAILS

## DRIP EMITTER INSTALLATION

## COTTAGE GROVE, MINNESOTA

JANUARY 2026

PLATE NO.
IRR-14

48_IRR14.DWG

## FRONT VIEW

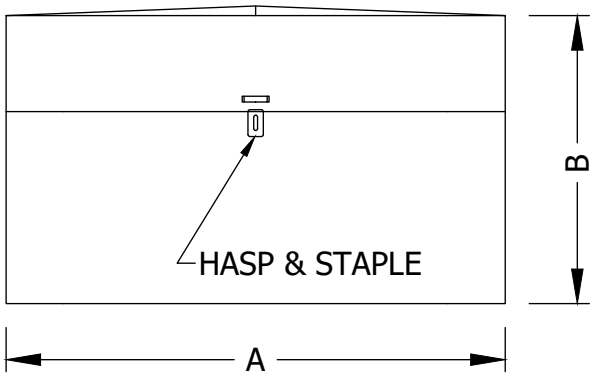


NOTE: FRONT OF BOX ALSO AVAILABLE WITH FULL FACE.

## END VIEW

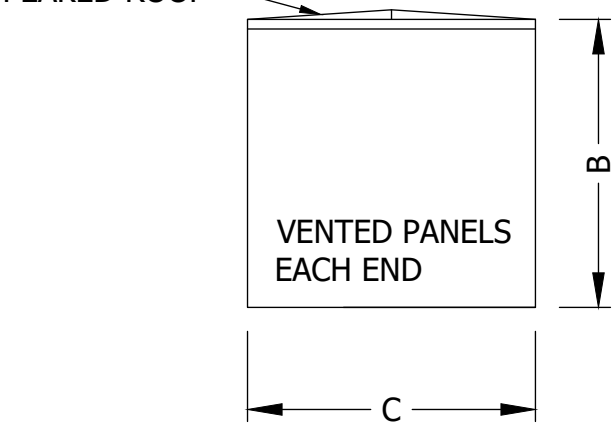


## REAR VIEW

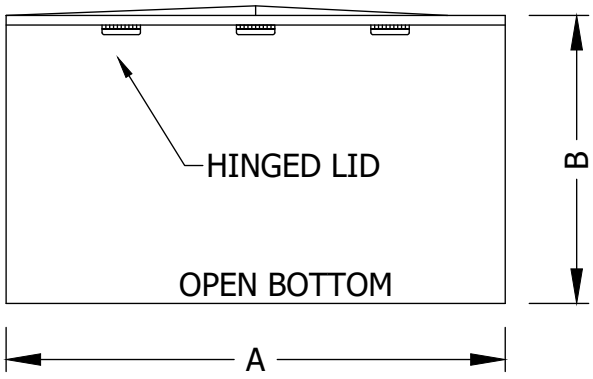


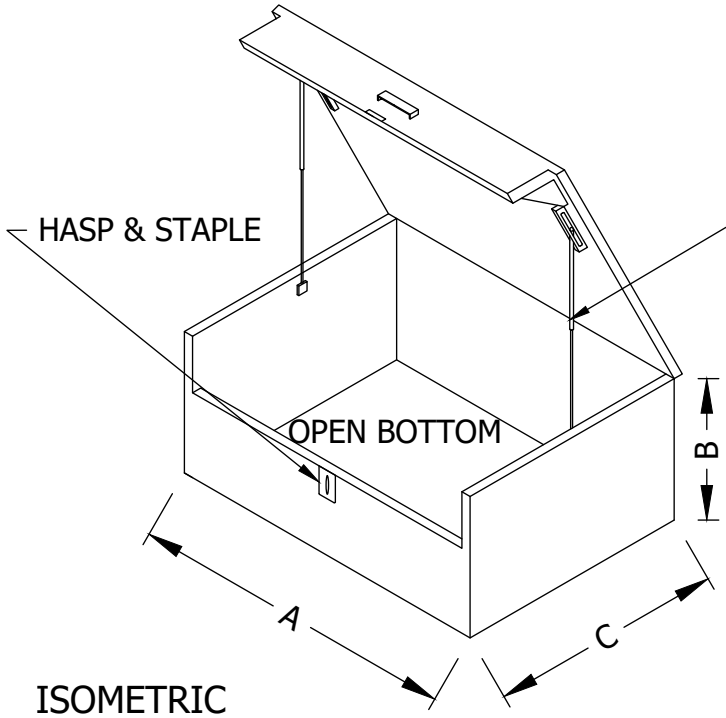


ISOMETRIC

BUILT TO SPECIFICATIONS

| |
|---|
| PAINTED: NON-DIRECTIONAL STL. STL. |
| LENGTH A: SIZE TO FIT |
| LENGTH B: SIZE TO FIT |
| LENGTH C: SIZE TO FIT |

Cottage Grove
Where Pride and Prosperity Meet

STANDARD DETAILS

IRRIGATION CABINET

COTTAGE GROVE, MINNESOTA

JANUARY 2026

PLATE NO.
IRR-15

48_IRR14.DWG

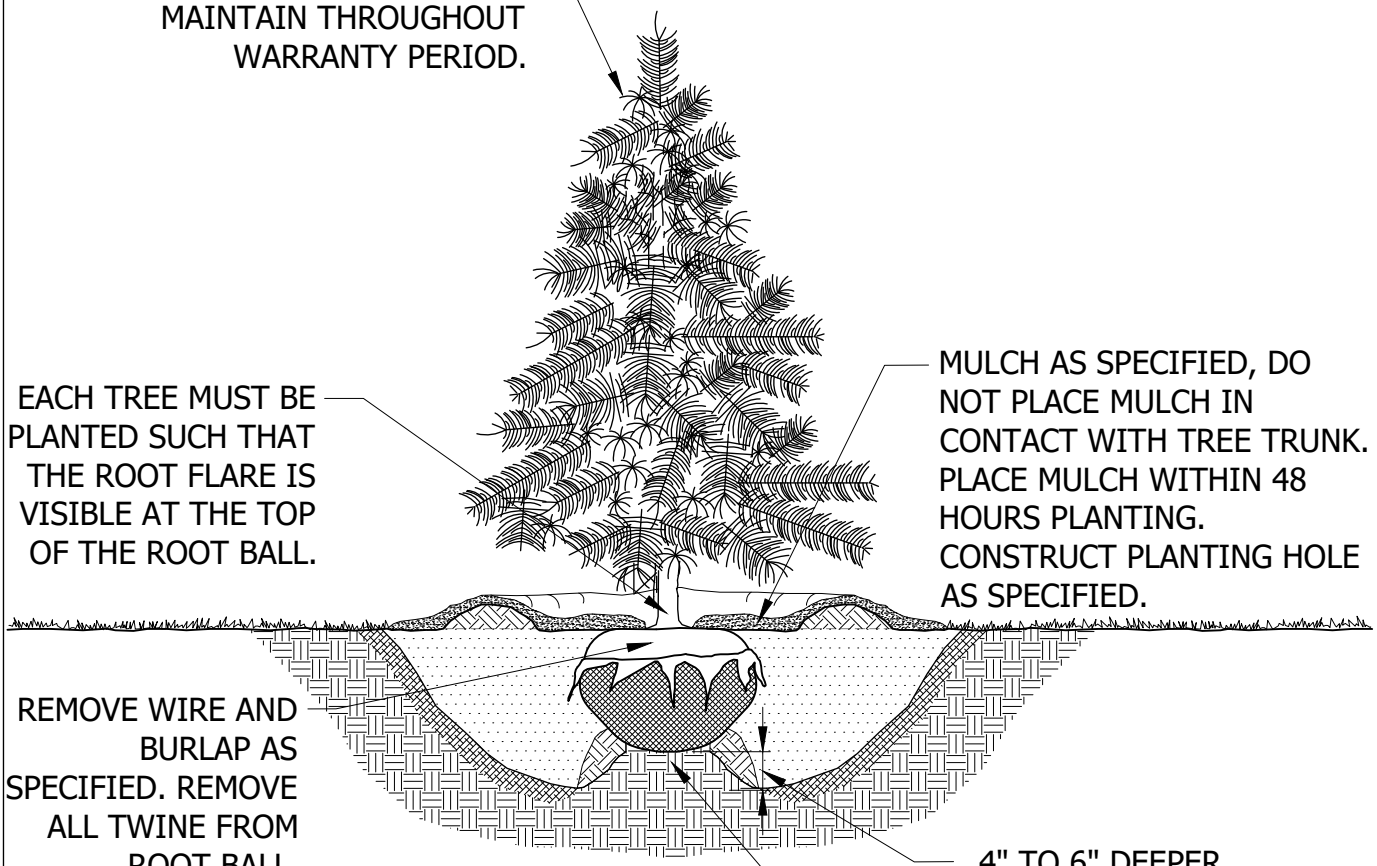


NOTES:

1. STAKE TREES ONLY AS SPECIFIED A THE DIRECTION OF LANDSCAPE ARCHITECT.
2. WRAP TREE TRUNKS ONLY AS SPECIFIED AT THE DIRECTION OF LANDSCAPE ARCHITECT.

Cottage Grove

Where Pride and Prosperity Meet

## STANDARD DETAILS

TYPICAL EVERGREEN TREE PLANTING

COTTAGE GROVE, MINNESOTA

JANUARY 2026

PLATE NO.

LAN-1

48_LAN1.DWG

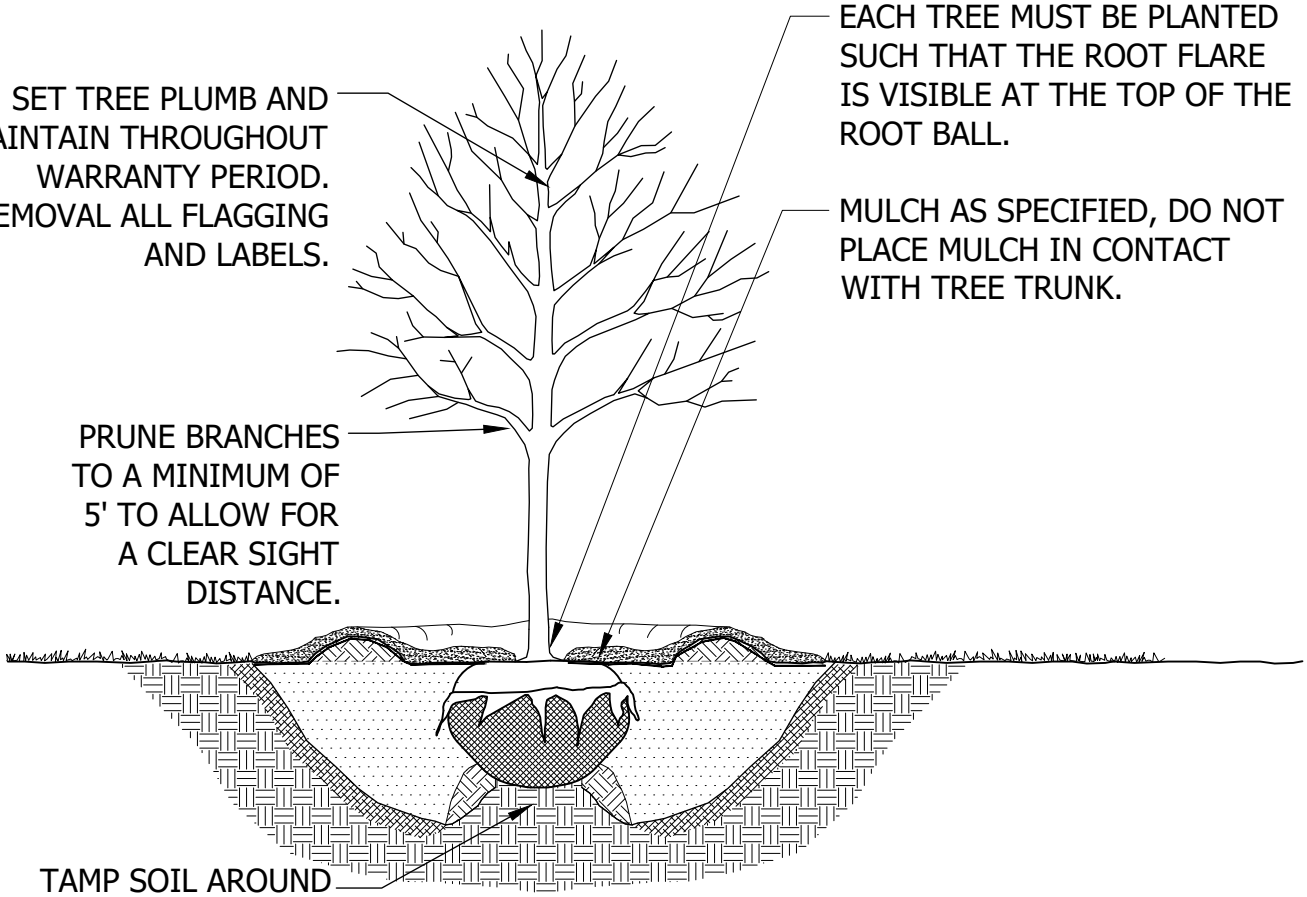


NOTES:

1. STAKE TREES ONLY AS SPECIFIED AT THE DIRECTION OF ENGINEER.
2. SET TOP OF ROOT BALL FLUSH TO GRADE OR 1-2 IN. HIGHER IN SLOWLY DRAINING SOILS.

Cottage Grove

Where Pride and Prosperity Meet

# STANDARD DETAILS

TYPICAL DECIDUOUS TREE PLANTING

COTTAGE GROVE, MINNESOTA

JANUARY 2026

PLATE NO.

LAN-2

48_LAN2.DWG

IF PLANT IS SHIPPED WITH A CONTAINER AROUND THE ROOTBALL, SLICE SIDES OF CONTAINER AND REMOVE COMPLETELY.

MULCH AS SPECIFIED. DO NOT PLACE MULCH IN CONTACT WITH THE PLANT.

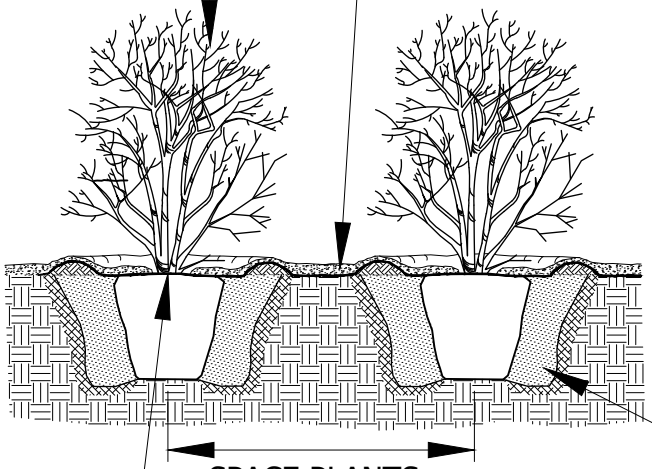

SPACE PLANTS ACCORDING TO PLANS

SET TOP OF ROOT BALL FLUSH TO GRADE .

DIG HOLE FOR PLANTING ROOT BALL.SCARIFY THE SIDES AND BOTTOM OF THE HOLE BEFORE PLACING THE SHRUB IN THE PLANTING HOLE.

Cottage Grove

Where Pride and Prosperity Meet

# STANDARD DETAILS

TYPICAL SHRUB PLANTING
B&B OR CONTAINER GROWN

COTTAGE GROVE, MINNESOTA

JANUARY 2026

PLATE NO.
LAN-3

48_LAN3.DWG

24" HEIGHT HANDHOLE AS SPECIFIED

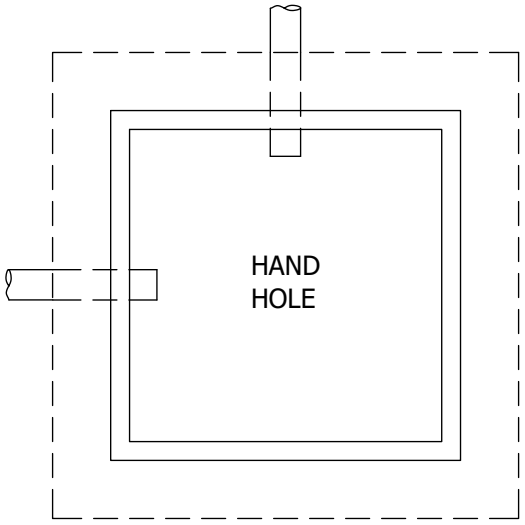


12" HEIGHT HANDHOLE AS SPECIFIED

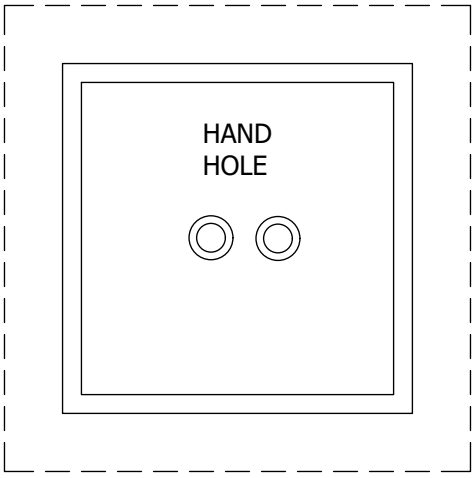


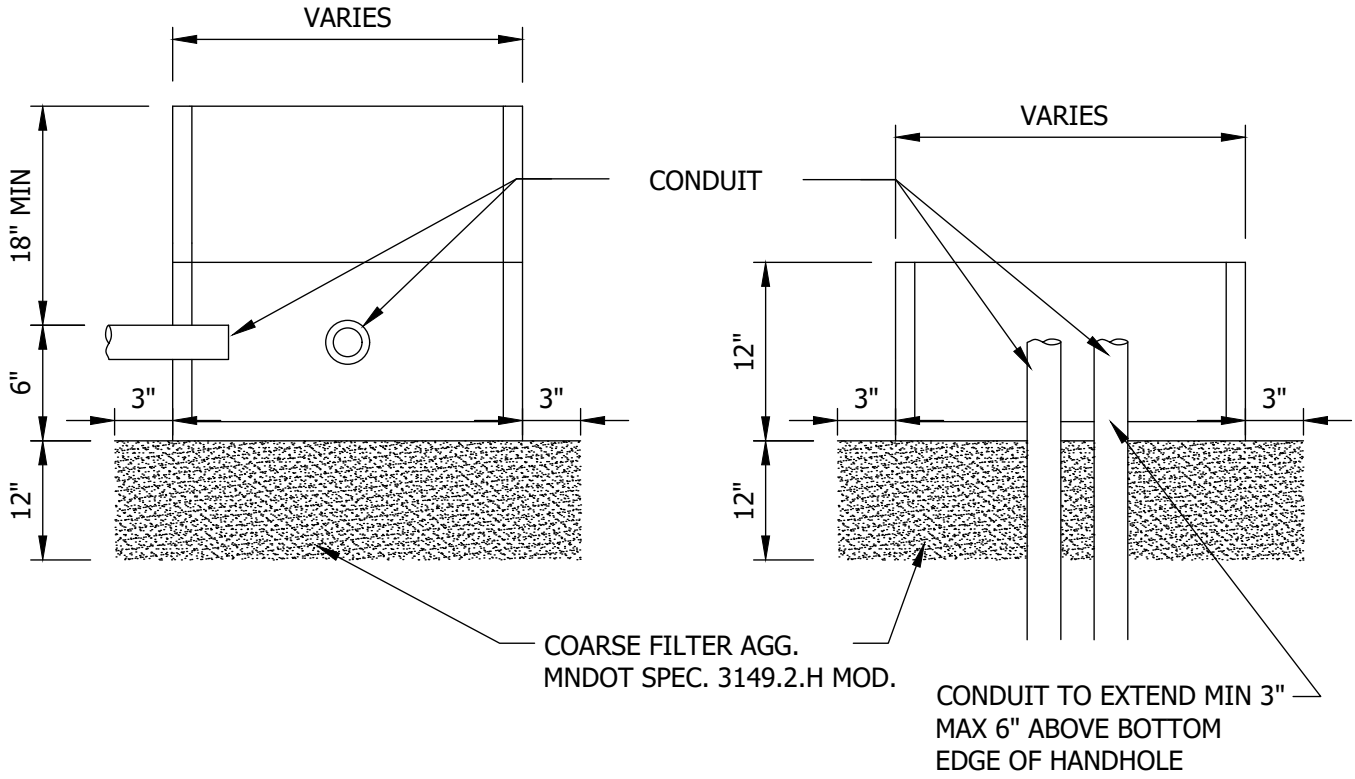


Cottage Grove
Where Pride and Prosperity Meet

# STANDARD DETAILS

LIGHTING HANDHOLE

COTTAGE GROVE, MINNESOTA

JANUARY 2026

PLATE NO.
LGT-1

48_LGT1.DWG

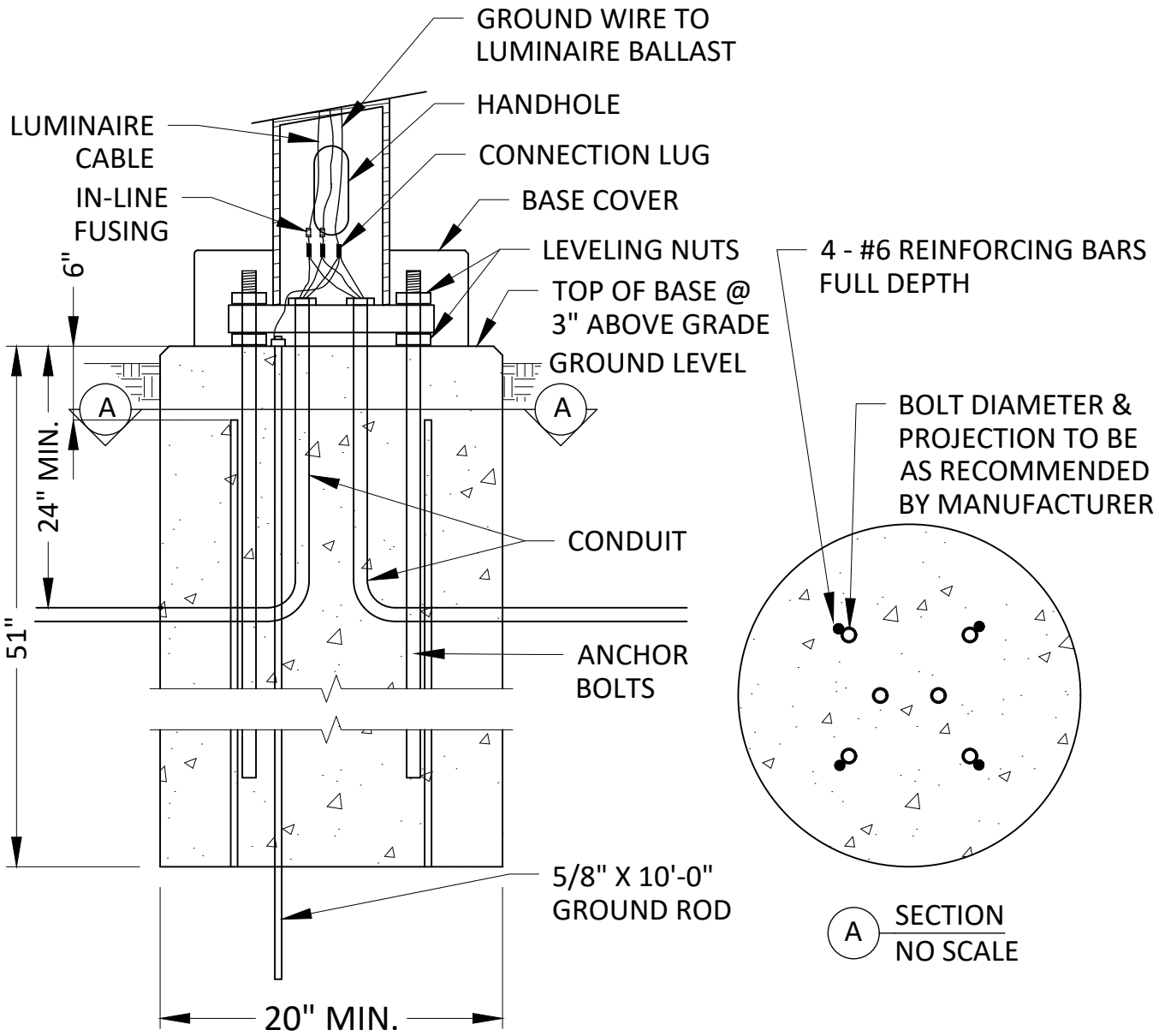


Cottage Grove
Where Pride and Prosperity Meet

STANDARD DETAILS

CONCRETE LIGHT BASE TYPE A

COTTAGE GROVE, MINNESOTA

JANUARY 2026

PLATE NO.
LGT-2

48_LGT2.dwg

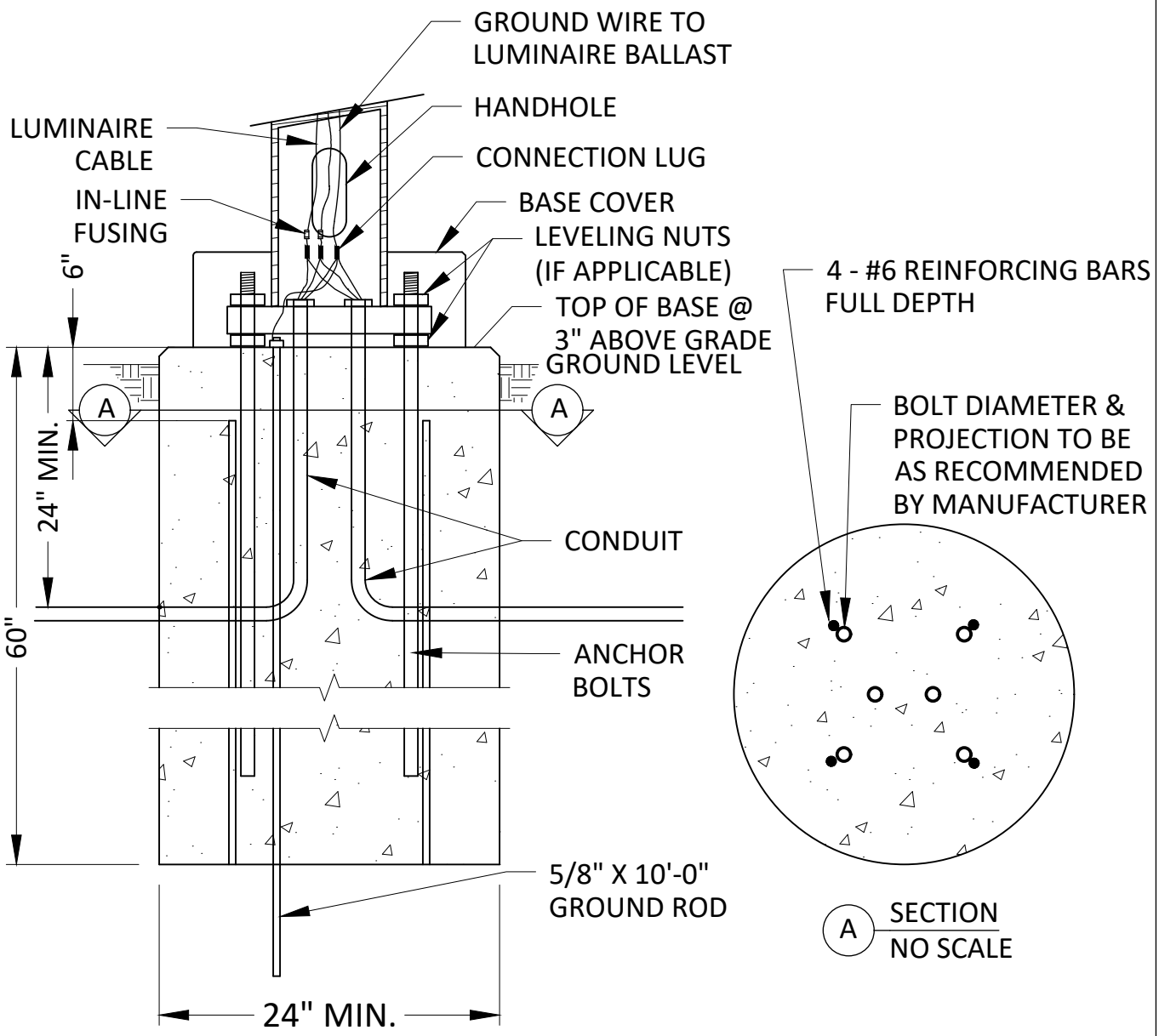


Cottage Grove
Where Pride and Prosperity Meet

STANDARD DETAILS

CONCRETE LIGHT BASE TYPE P

COTTAGE GROVE, MINNESOTA

JANUARY 2026

PLATE NO.
LGT-3

48_LGT3.dwg

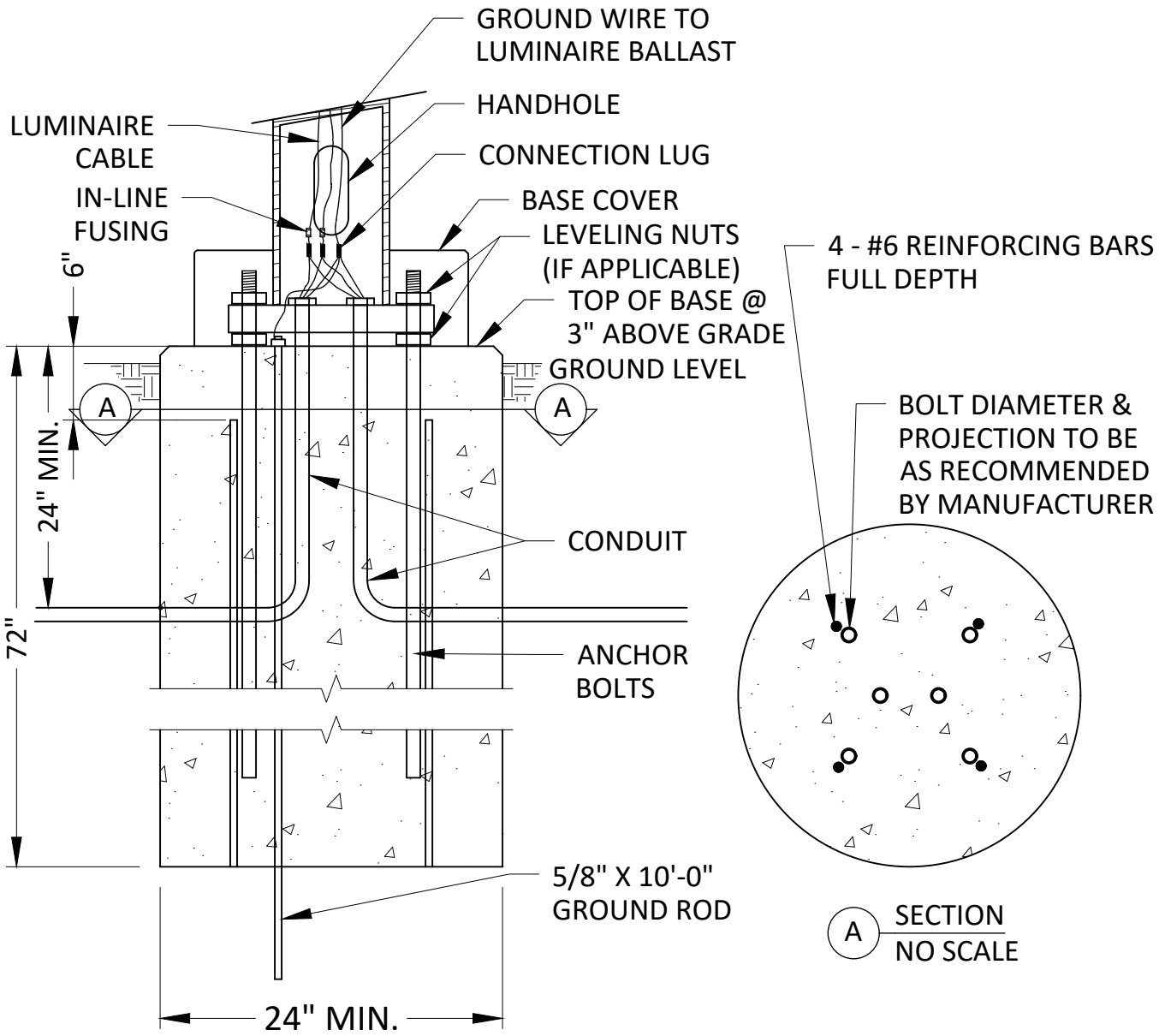


Cottage Grove
Where Pride and Prosperity Meet

STANDARD DETAILS

CONCRETE LIGHT BASE TYPE E

COTTAGE GROVE, MINNESOTA

JANUARY 2026

PLATE NO.
LGT-4

48_LGT4.dwg

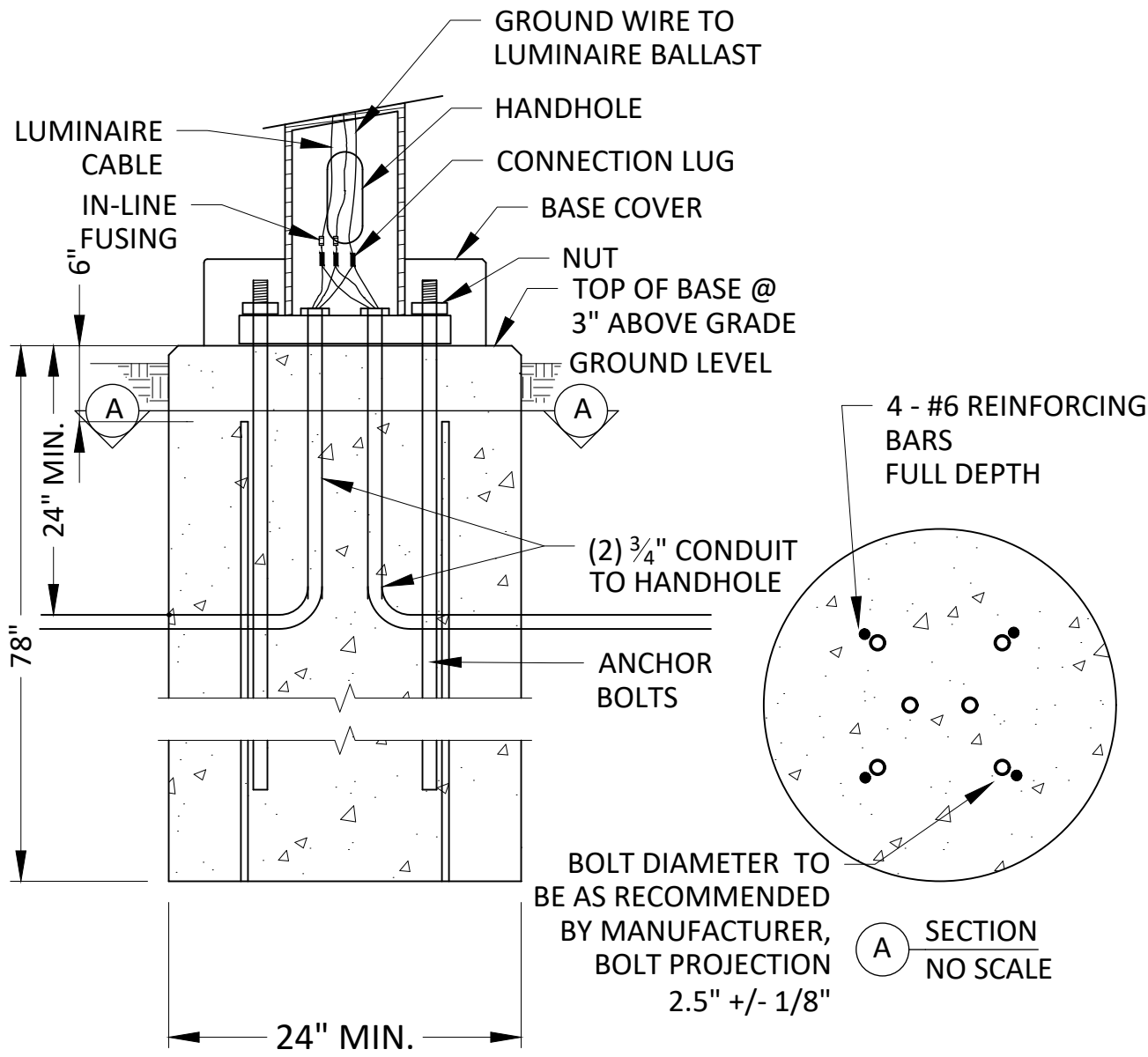


NOTES: 1. ⅝" X 10'-0" GROUND ROD TO BE LOCATED IN HANDHOLE ADJACENT TO BASE.
2. DESIGN F FOUNDATIONS SHALL BE PRECAST

Cottage Grove
Where Pride and Prosperity Meet

STANDARD DETAILS

CONCRETE LIGHT BASE TYPE F

COTTAGE GROVE, MINNESOTA

JANUARY 2026

PLATE NO.
LGT-5

48_LGT5.dwg

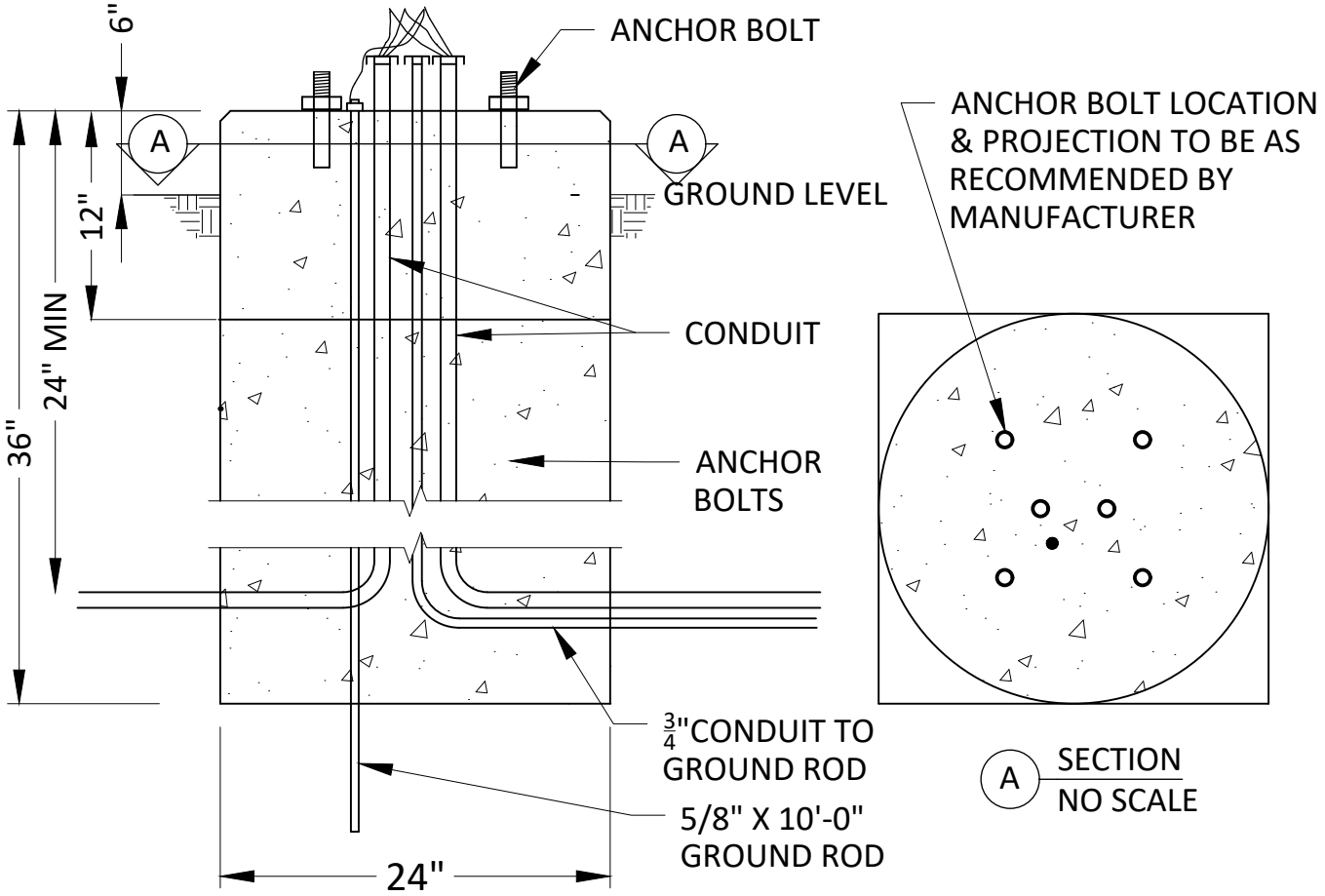


NOTES:
1. TOP 1' OF PAD TO BE 24" X 24" SQUARE
2. BOTTOM 24" OF PAD TO BE 24" CYLINDER FORMED WITH SONA TUBE
3. A SECOND GROUNDING ROD IS TO BE LOCATED 6' AWAY FROM THE BASE WITH A #6 GROUNDING CONDUCTOR RUNNING TO IT WITHIN A ¾" CONDUIT

Cottage Grove
Where Pride and Prosperity Meet

STANDARD DETAILS

LIGHTING EQUIPMENT PAD

COTTAGE GROVE, MINNESOTA

JANUARY 2026

PLATE NO.
LGT-6

48_LGT6.dwg

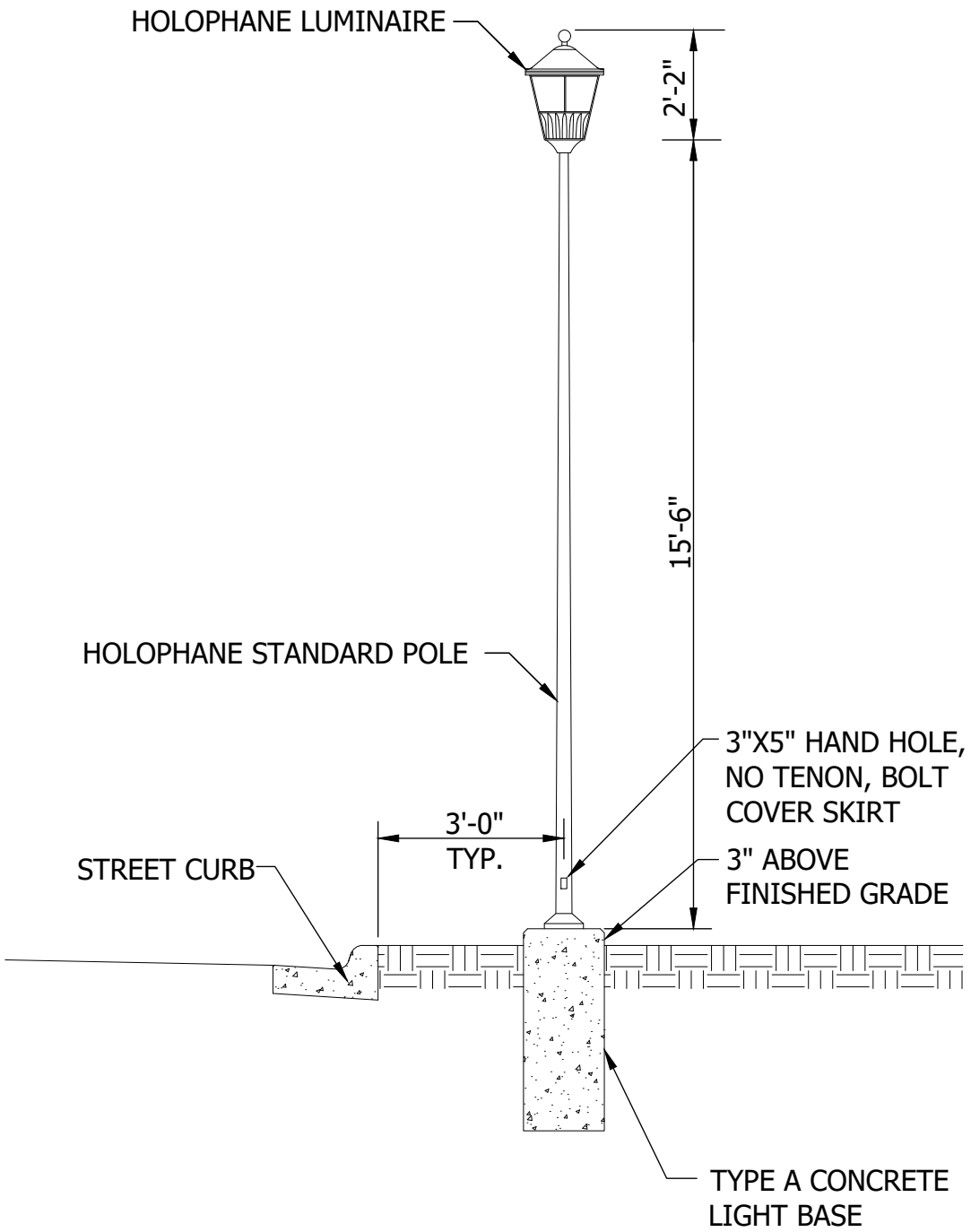


NOTE: POLE ACCESS COVER LOCATED OPPOSITE CURB SIDE OF POLE

Cottage Grove
Where Pride and Prosperity Meet

# STANDARD DETAILS

LIGHT POLE TYPE A
RESIDENTIAL

COTTAGE GROVE, MINNESOTA

JANUARY 2026

PLATE NO.
LGT-7

48_LGT7.DWG

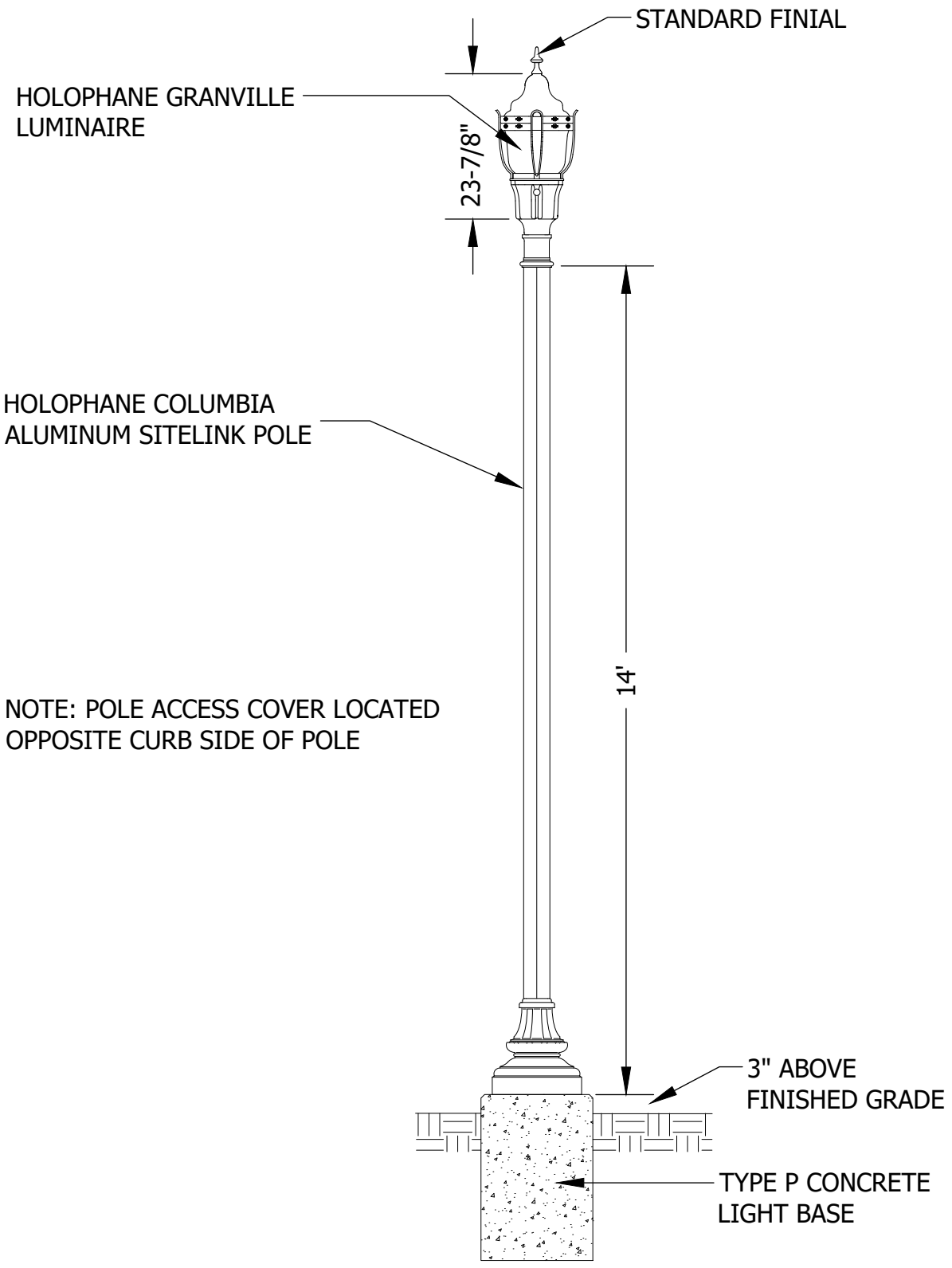


Cottage Grove
Where Pride and Prosperity Meet

# STANDARD DETAILS

LIGHT POLE TYPE P1
RAVINE SINGLE LED FIXTURE 14 FOOT

COTTAGE GROVE, MINNESOTA

JANUARY 2026

PLATE NO.
LGT-8

48_LGT8.DWG

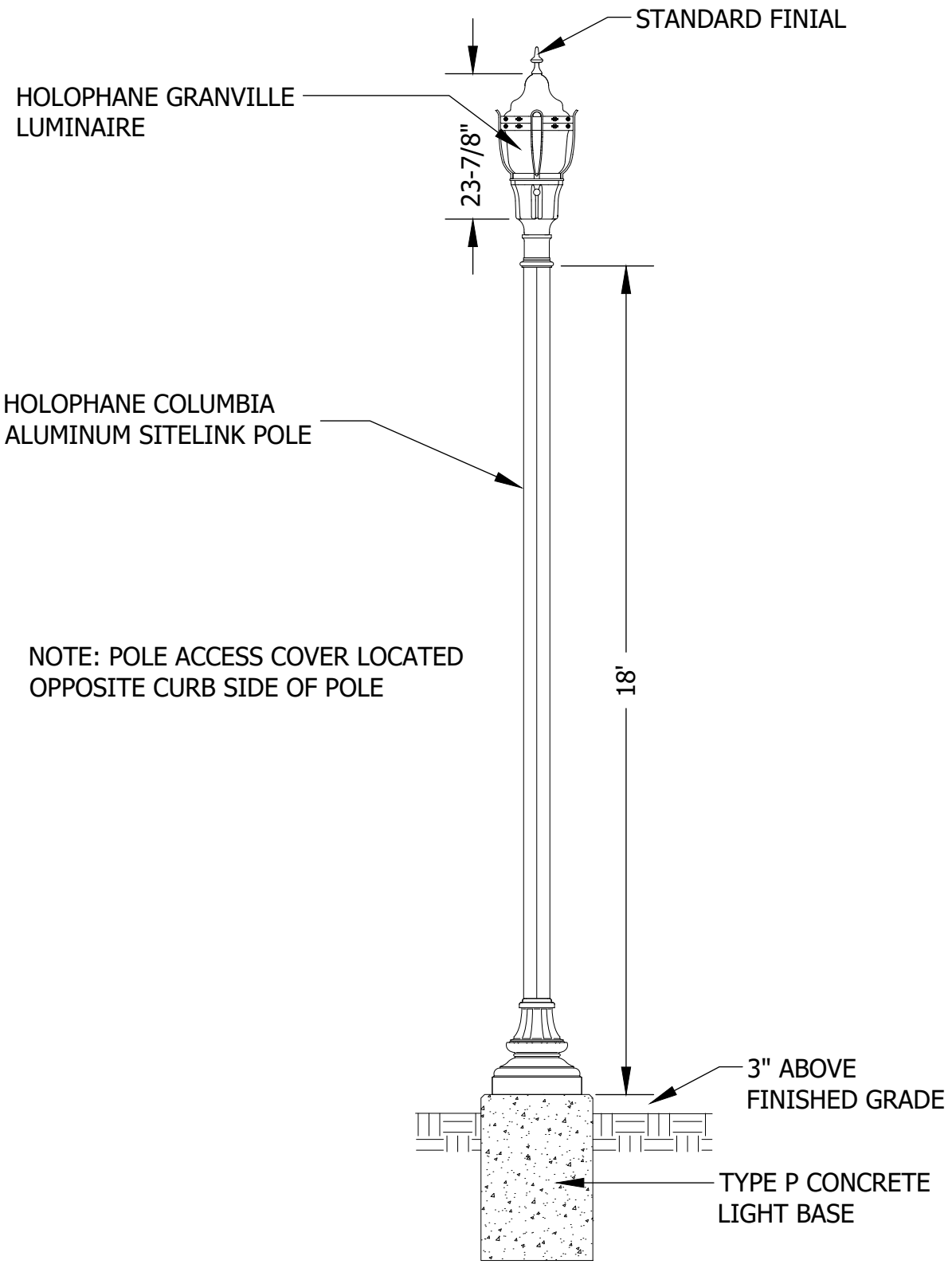


Cottage Grove
Where Pride and Prosperity Meet

# STANDARD DETAILS

LIGHT POLE TYPE P2
RAVINE SINGLE LED FIXTURE 18 FOOT

COTTAGE GROVE, MINNESOTA

JANUARY 2026

PLATE NO.
LGT-9

48_LGT9.DWG

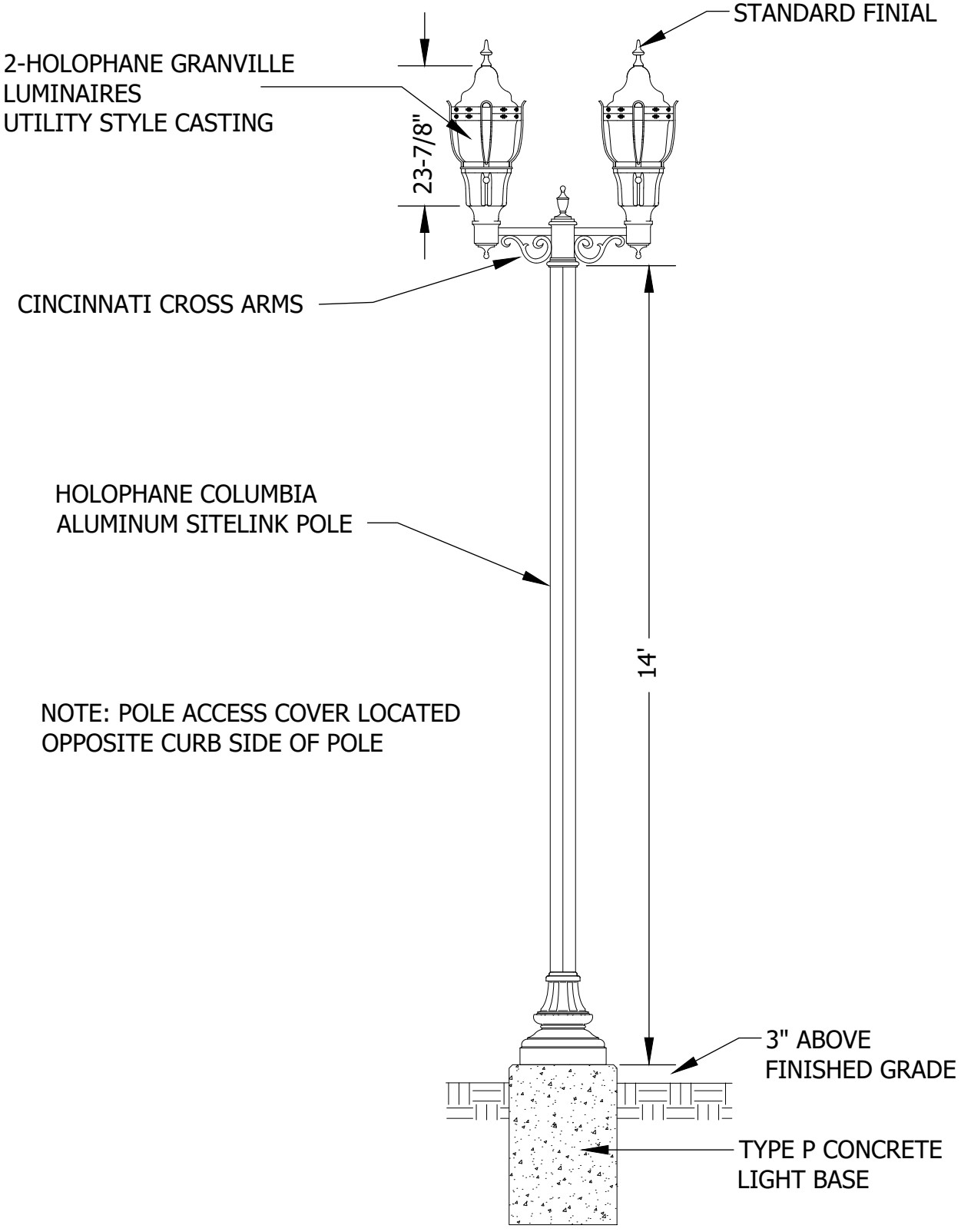


Cottage Grove
Where Pride and Prosperity Meet

# STANDARD DETAILS

LIGHT POLE TYPE P3
RAVINE DOUBLE LED FIXTURE 14 FOOT

COTTAGE GROVE, MINNESOTA

JANUARY 2026

PLATE NO.
LGT-10

48_LGT10.DWG

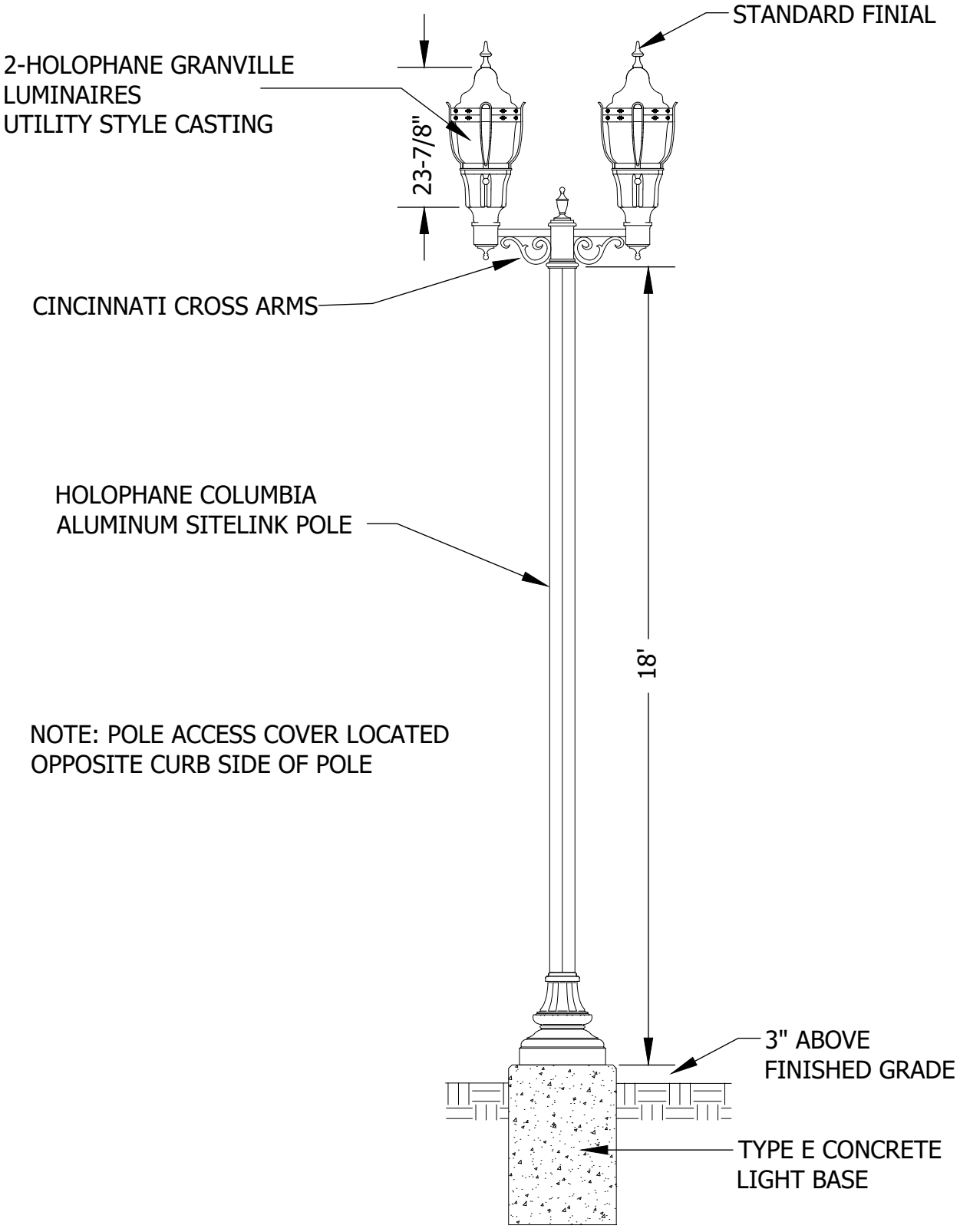


Cottage Grove
Where Pride and Prosperity Meet

# STANDARD DETAILS

LIGHT POLE TYPE E1
RAVINE DOUBLE LED FIXTURE 18 FOOT

COTTAGE GROVE, MINNESOTA

JANUARY 2026

PLATE NO.
LGT-11

48_LGT11.DWG

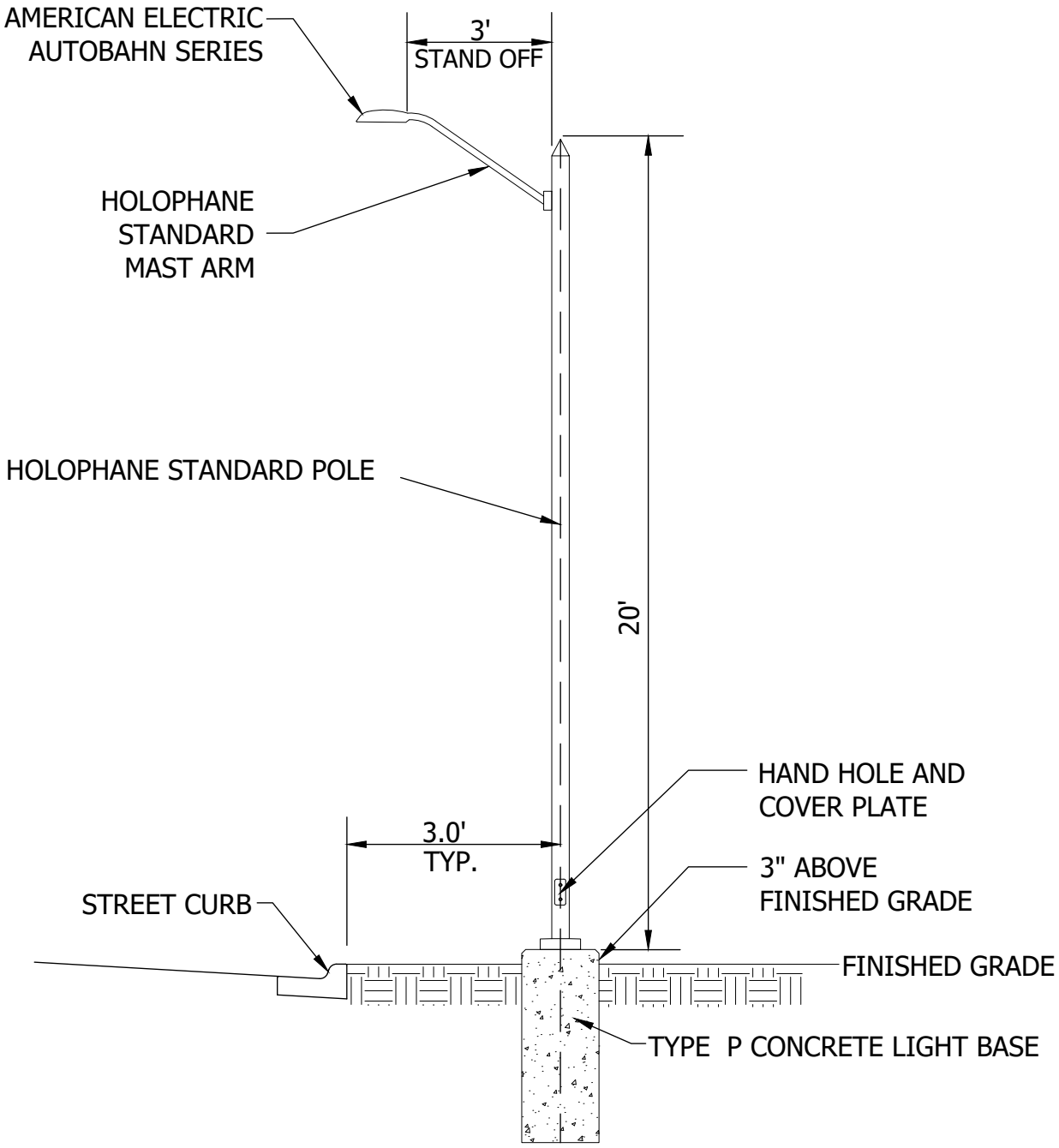


NOTE: POLE ACCESS COVER LOCATED OPPOSITE CURB SIDE OF POLE

Cottage Grove
Where Pride and Prosperity Meet

# STANDARD DETAILS

LIGHT POLE TYPE P4
COBRA HEAD LED FIXTURE 20 FOOT

COTTAGE GROVE, MINNESOTA

JANUARY 2026

PLATE NO.
LGT-12

48_LGT12.DWG

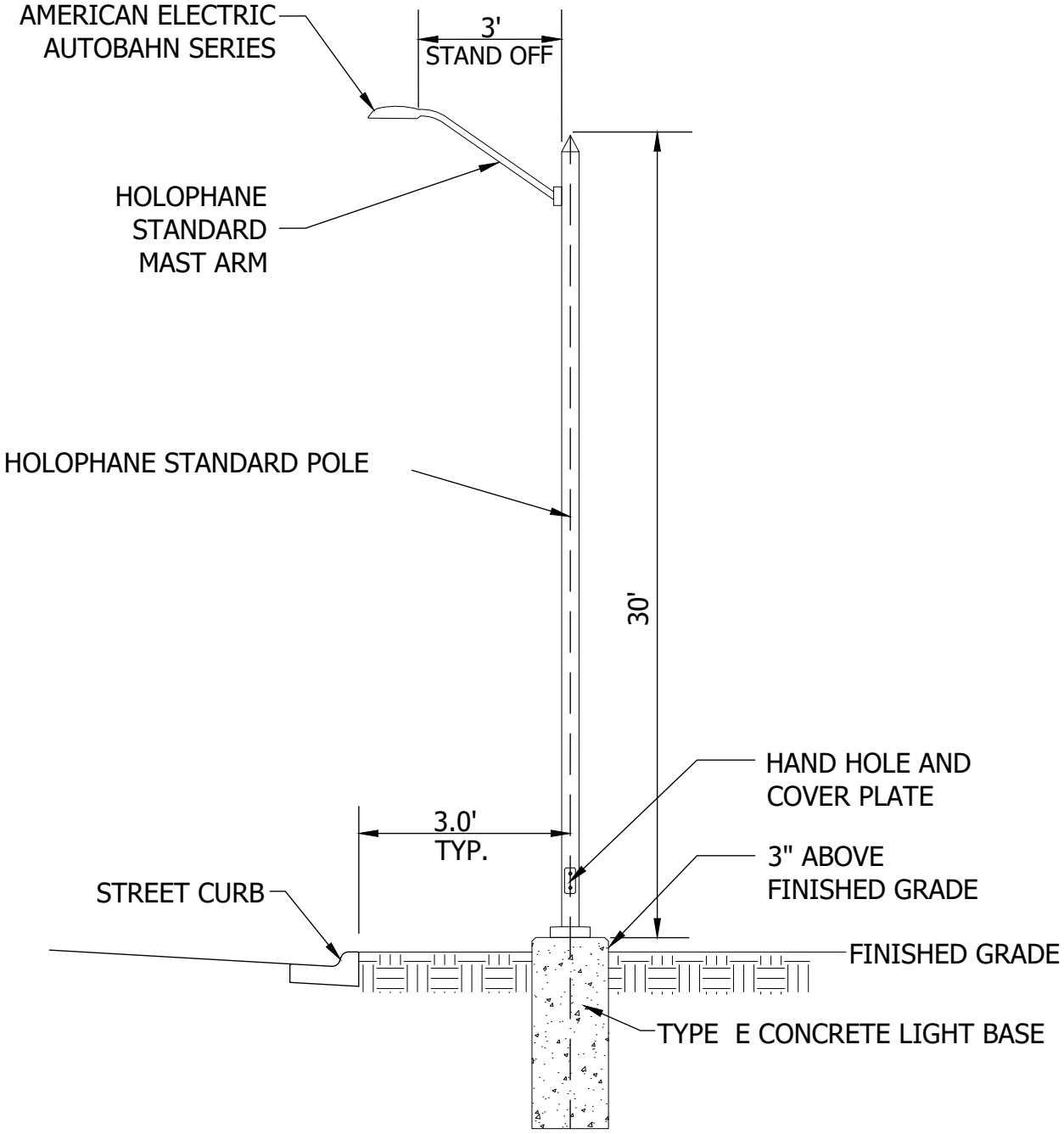


NOTE: POLE ACCESS COVER LOCATED OPPOSITE CURB SIDE OF POLE

Cottage Grove
Where Pride and Prosperity Meet

# STANDARD DETAILS

LIGHT POLE TYPE E2
COBRA HEAD LED FIXTURE 30 FOOT

## COTTAGE GROVE, MINNESOTA

JANUARY 2026

PLATE NO.
LGT-13

48_LGT13.DWG

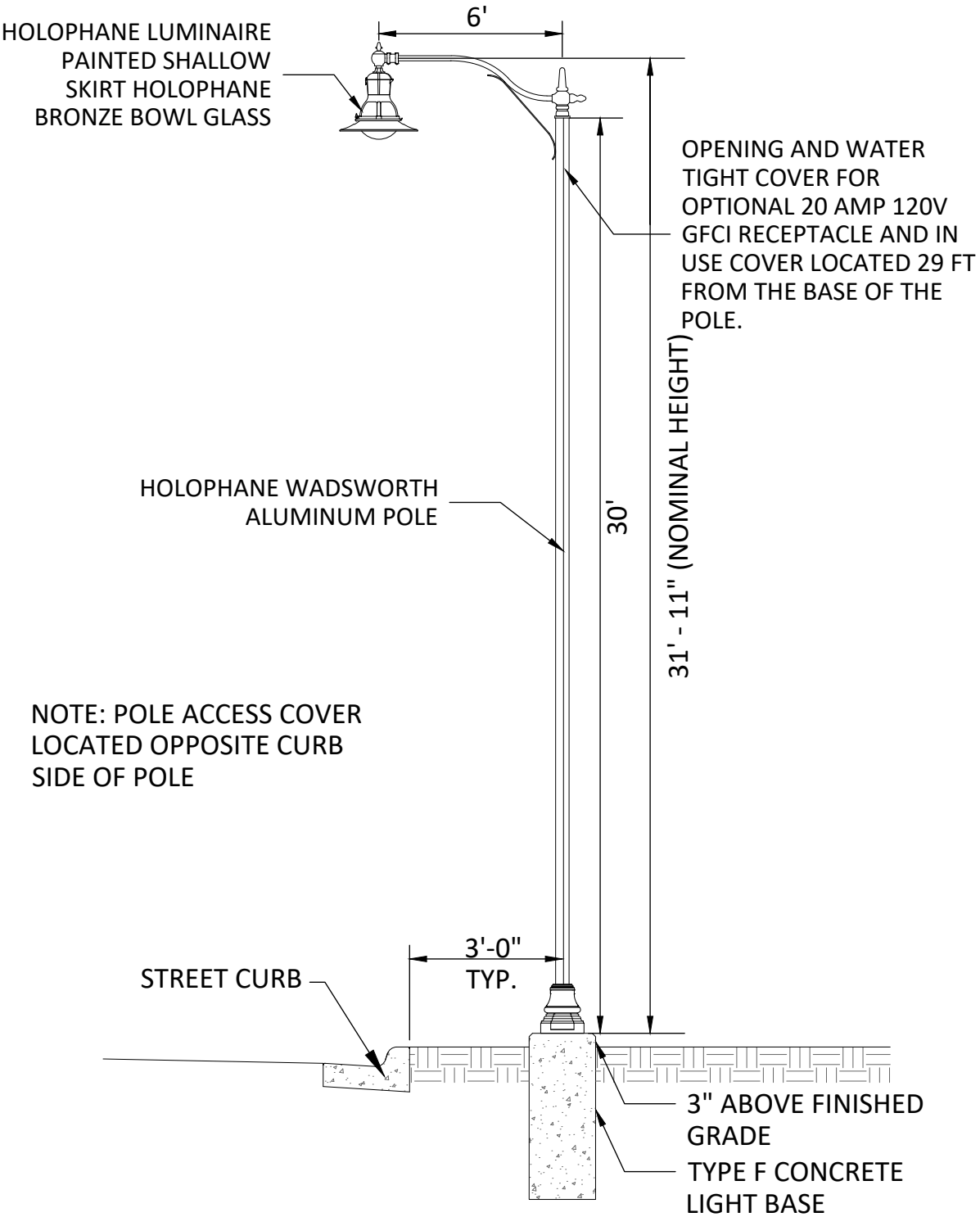


Cottage Grove
Where Pride and Prosperity Meet

# STANDARD DETAILS

LIGHT POLE TYPE F1
LED LIGHTING UNIT 31 FOOT - 11 INCH

COTTAGE GROVE, MINNESOTA

JANUARY 2026

PLATE NO.
LGT-14

48_LGT14.DWG

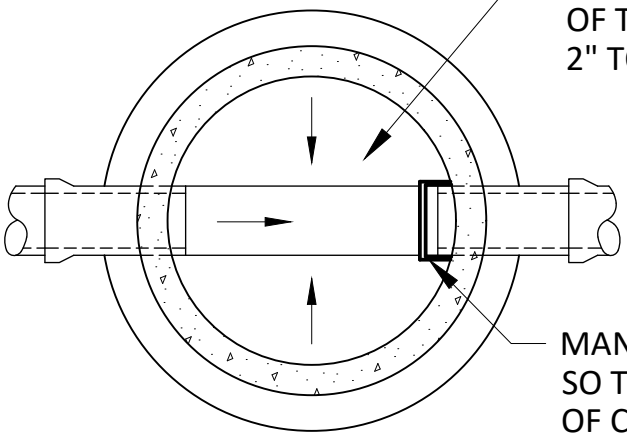

PRECAST INVERT MUST BE 1/2 DIAMETER OF THE PIPE AND BENCHES SLOPED 2" TOWARD THE INVERT.

MANHOLE STEPS SHALL BE PLACED SO THAT OFFSET VERTICAL PORTION OF CONE IS FACING DOWNSTREAM.

PLAN

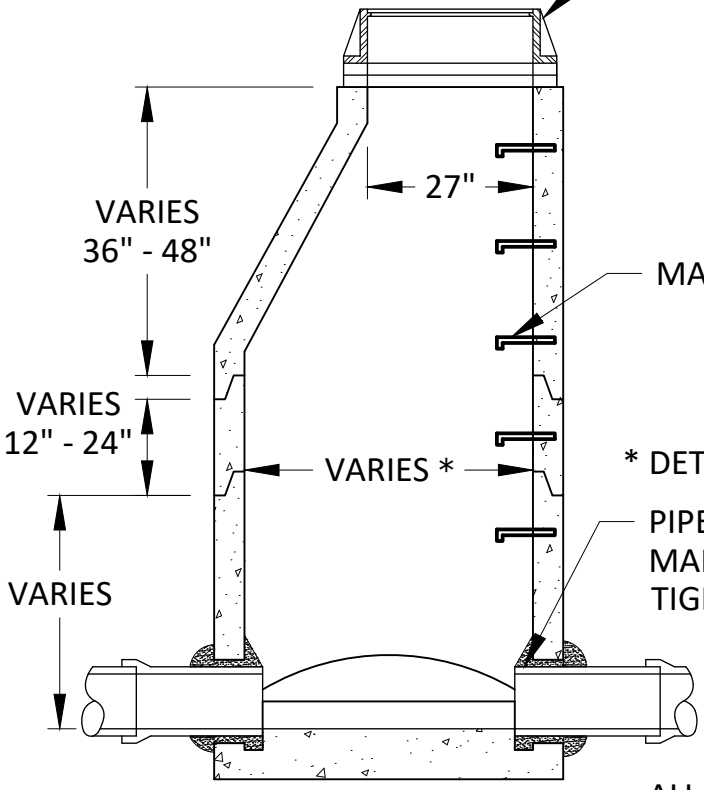


CASTING AND ADJUSTMENT RINGS AS SPECIFIED. PER DETAIL PLATE STR-23.

MANHOLE STEPS 16" MAX ON CENTER.

* DETERMINED BY PIPE SIZE

PIPE SHALL BE CUT TO BE 2"-4" INSIDE MANHOLE WALL AND HAVE A WATER TIGHT SEAL. SEE SPECIFICATION.

ALL DOG HOUSES SHALL BE MORTARED ON INSIDE AND OUTSIDE.

SECTION

Cottage Grove

Where Pride and Prosperity Meet

STANDARD DETAILS

SANITARY SEWER MANHOLE

COTTAGE GROVE, MINNESOTA

JANUARY 2026

PLATE NO.

SAN-1

48_SAN1.DWG

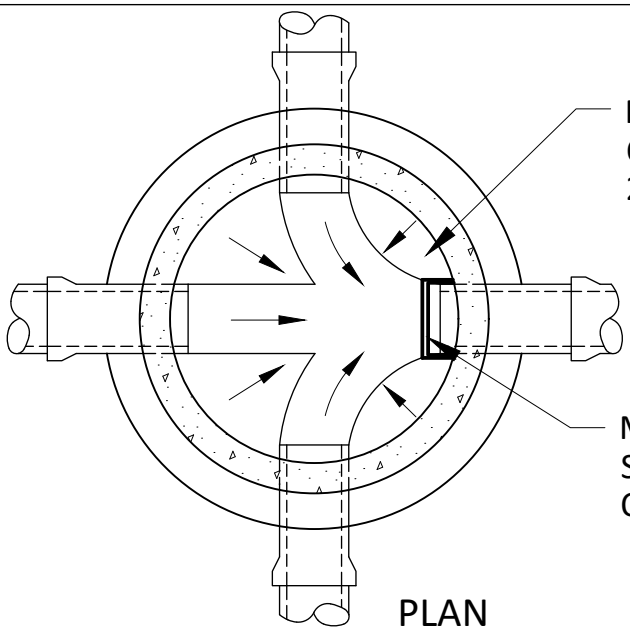

PRECAST INVERT MUST BE 1/2 DIAMETER OF THE PIPE AND BENCHES SLOPED 2" TOWARD THE INVERT.

MANHOLE STEPS SHALL BE PLACED SO THAT OFFSET VERTICAL PORTION OF CONE IS FACING DOWNSTREAM.

PLAN

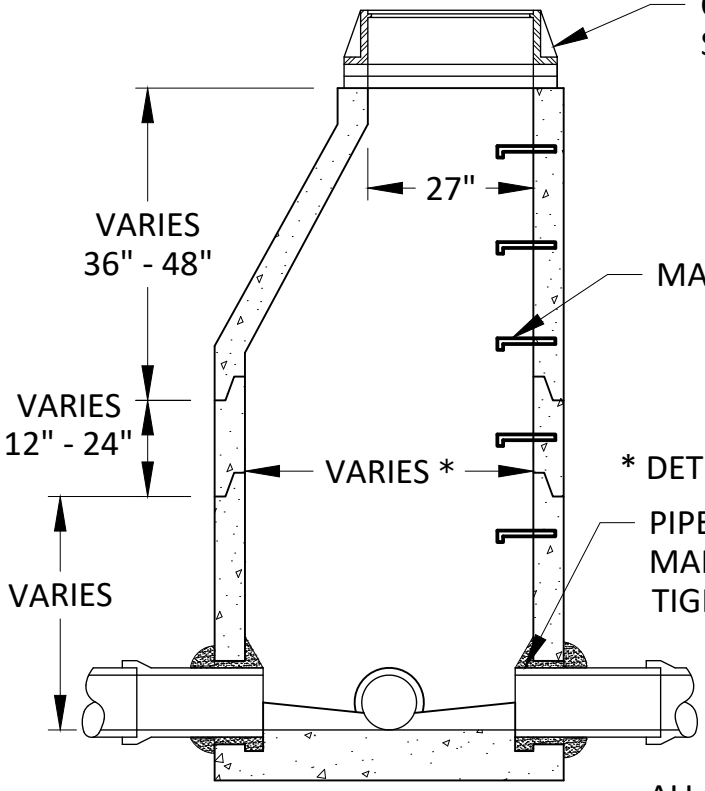


CASTING AND ADJUSTMENT RINGS AS SPECIFIED. PER DETAIL PLATE STR-23.

MANHOLE STEPS 16" MAX ON CENTER.

* DETERMINED BY PIPE SIZE

PIPE SHALL BE CUT TO BE 2"-4" INSIDE MANHOLE WALL AND HAVE A WATER TIGHT SEAL. SEE SPECIFICATION.

ALL DOG HOUSES SHALL BE MORTARED ON INSIDE AND OUTSIDE.

SECTION

Cottage Grove
Where Pride and Prosperity Meet

# STANDARD DETAILS

## SANITARY SEWER
## JUNCTION MANHOLE
## COTTAGE GROVE, MINNESOTA

JANUARY 2026

PLATE NO.
SAN-2

48_SAN2.DWG

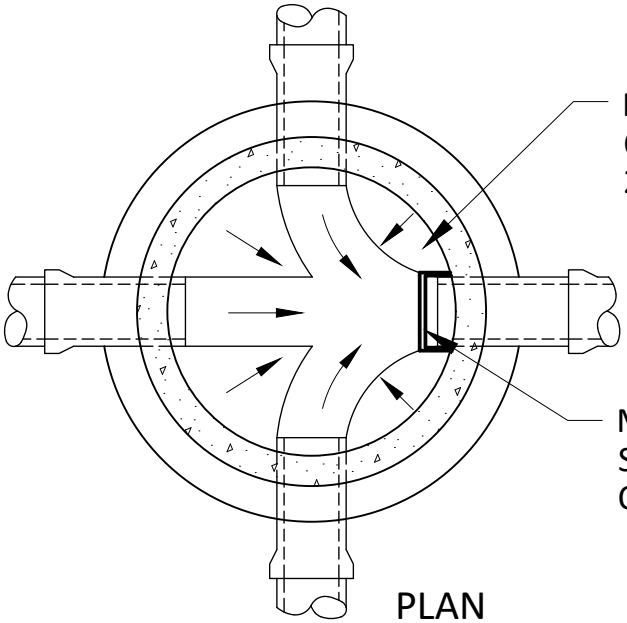

PRECAST INVERT MUST BE 1/2 DIAMETER OF THE PIPE AND BENCHES SLOPED 2" TOWARD THE INVERT.

MANHOLE STEPS SHALL BE PLACED SO THAT OFFSET VERTICAL PORTION OF CONE IS FACING DOWNSTREAM.

PLAN

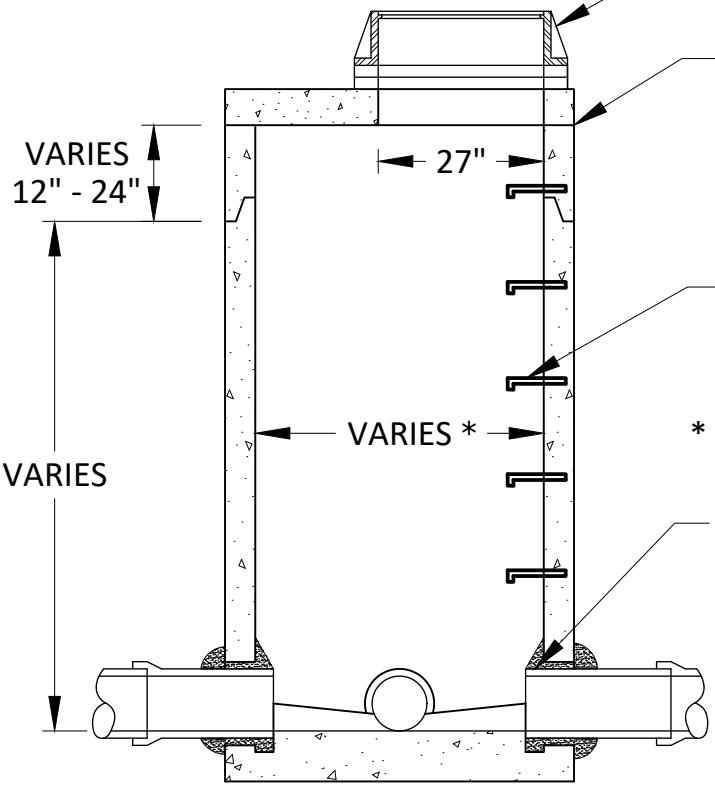


CASTING AND ADJUSTMENT RINGS AS SPECIFIED. PER DETAIL PLATE STR-23.

TOP OF BARREL SECTION BELOW TOP SLAB TO HAVE FLAT TOP EDGE SEALED WITH 2 BEADS OF RAMNEK OR EQUAL.

MANHOLE STEPS 16" MAX ON CENTER.

* DETERMINED BY PIPE SIZE

PIPE SHALL BE CUT TO BE 2"-4" INSIDE MANHOLE WALL AND HAVE A WATER TIGHT SEAL. SEE SPECIFICATION.

ALL DOG HOUSES SHALL BE MORTARED ON INSIDE AND OUTSIDE.

SECTION

Cottage Grove
Where Pride and Prosperity Meet

STANDARD DETAILS

SANITARY SEWER JUNCTION MANHOLE WITH REINFORCED TOP SLAB

COTTAGE GROVE, MINNESOTA

JANUARY 2026

PLATE NO.
SAN-3

48_SAN3.DWG

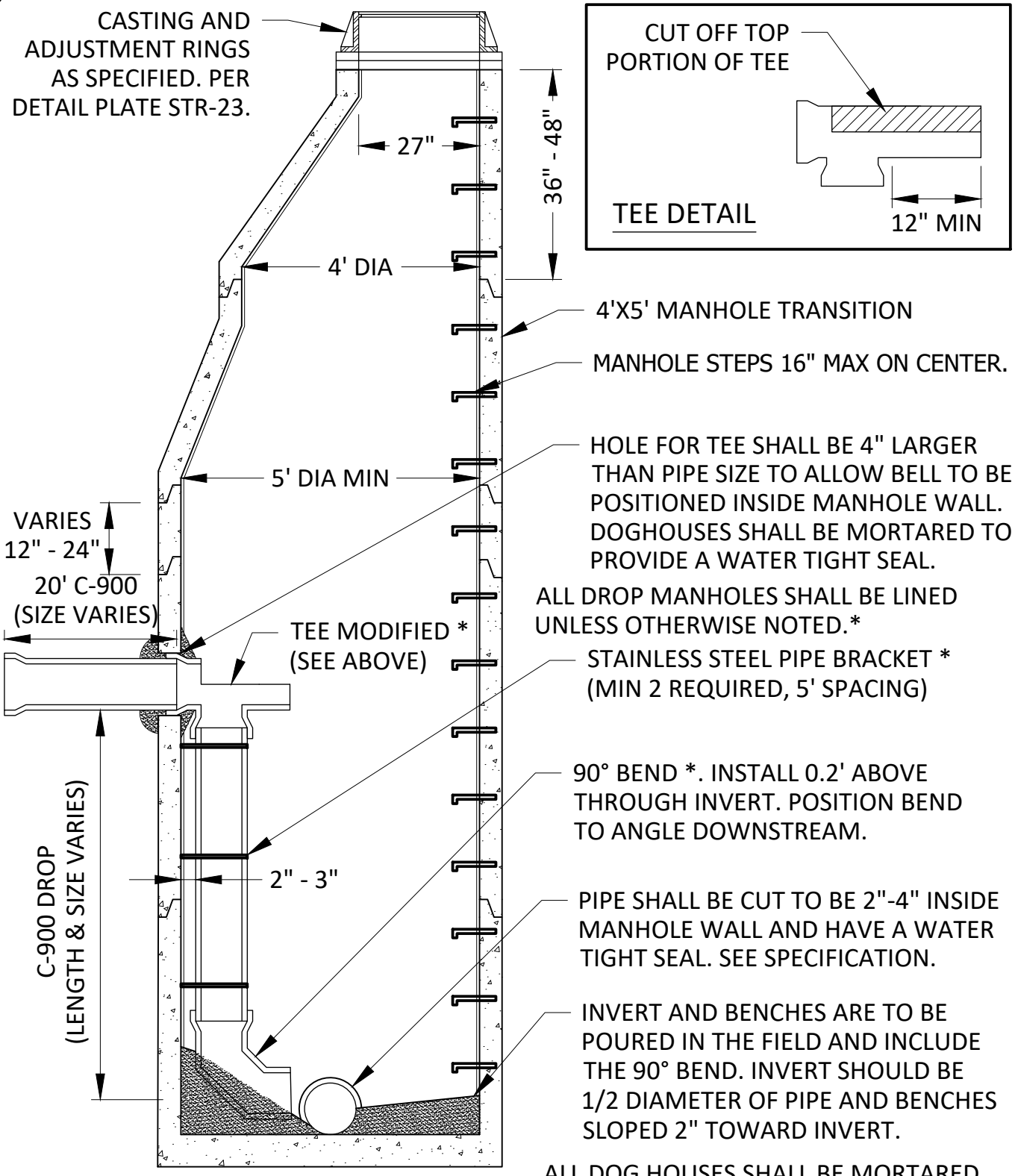


Cottage Grove
Where Pride and Prosperity Meet

STANDARD DETAILS

SANITARY SEWER
DROP INLET MANHOLE
COTTAGE GROVE, MINNESOTA

JANUARY 2026

PLATE NO.
SAN-4

48_SAN4.DWG

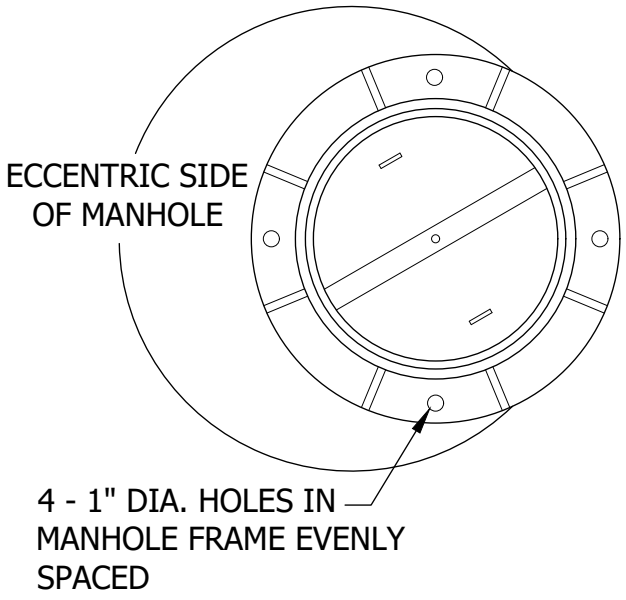


PLAN VIEW TOP
COVER REMOVED

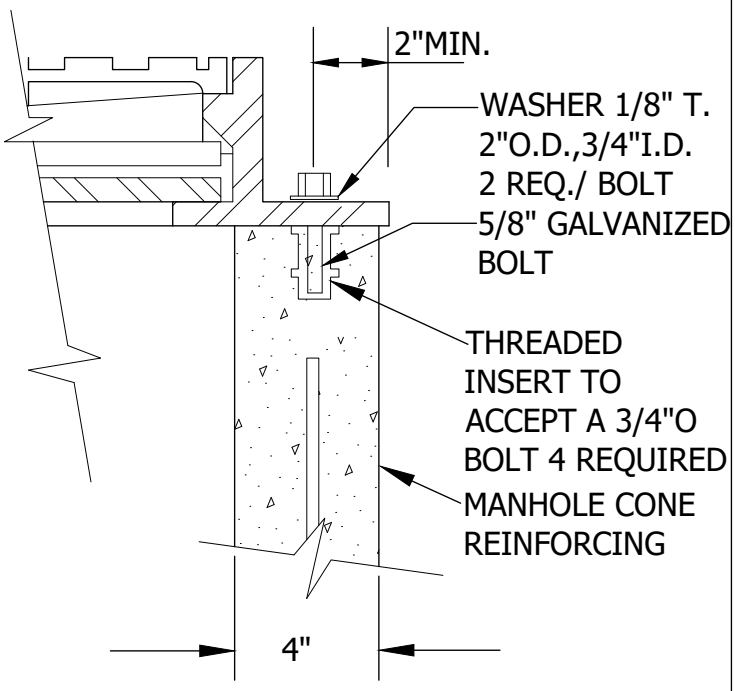


TIE DOWN DETAIL

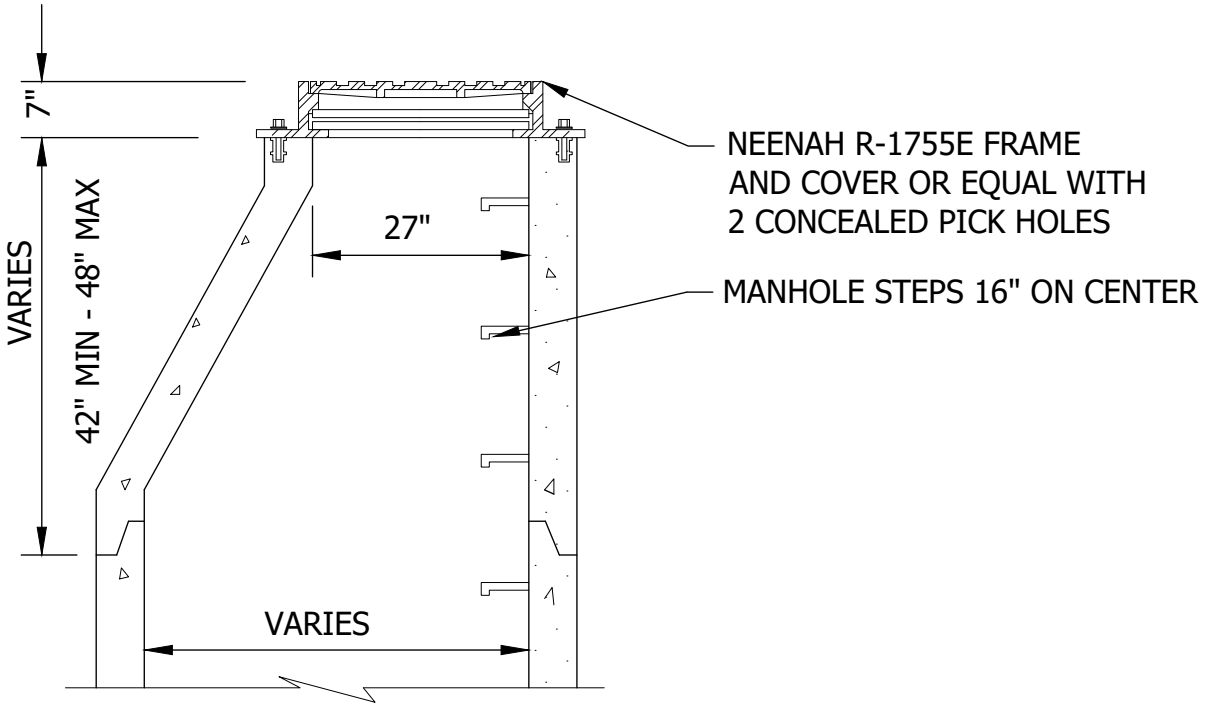


ECCENTRIC
WATERTIGHT MANHOLE

Cottage Grove
Where Pride and Prosperity Meet

STANDARD DETAILS

WATERTIGHT CASTING FOR
SANITARY SEWER MANHOLE

COTTAGE GROVE, MINNESOTA

JANUARY 2026

PLATE NO.
SAN-5

48_SAN5.DWG

NOTES:

① REF. SER-11 FOR CURB STOP AND BOX THAT FALL WITHIN BITUMINOUS OR CONCRETE.

② *EXTEND CURB STOP 1' BEYOND R/W WHEN SIDEWALK IS PRESENT.

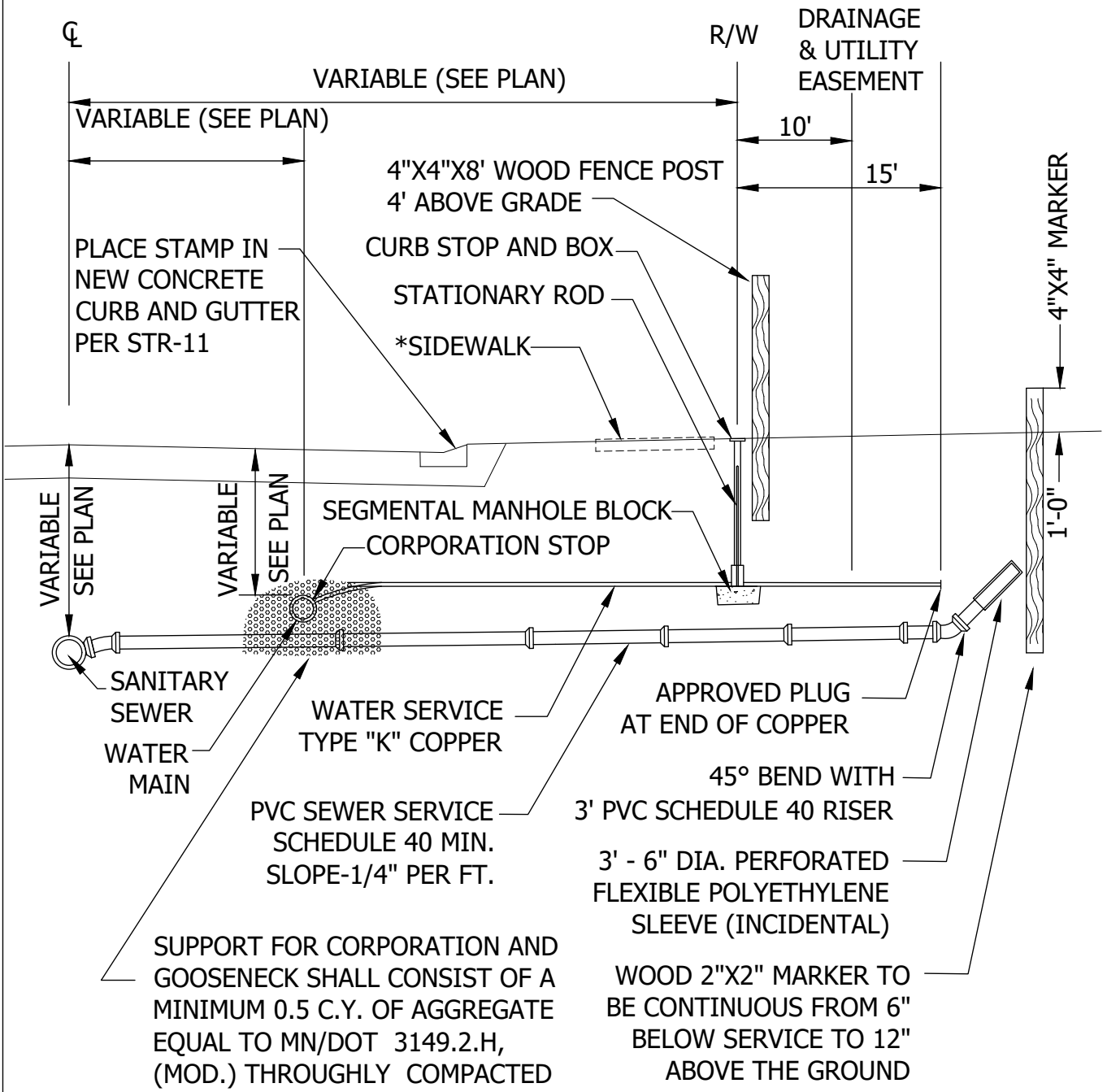


Cottage Grove

Where Pride and Prosperity Meet

## STANDARD DETAILS

RESIDENTIAL SEWER AND WATER SERVICE CONNECTIONS

COTTAGE GROVE, MINNESOTA

JANUARY 2026

PLATE NO.

SER-1

48_SER1.DWG

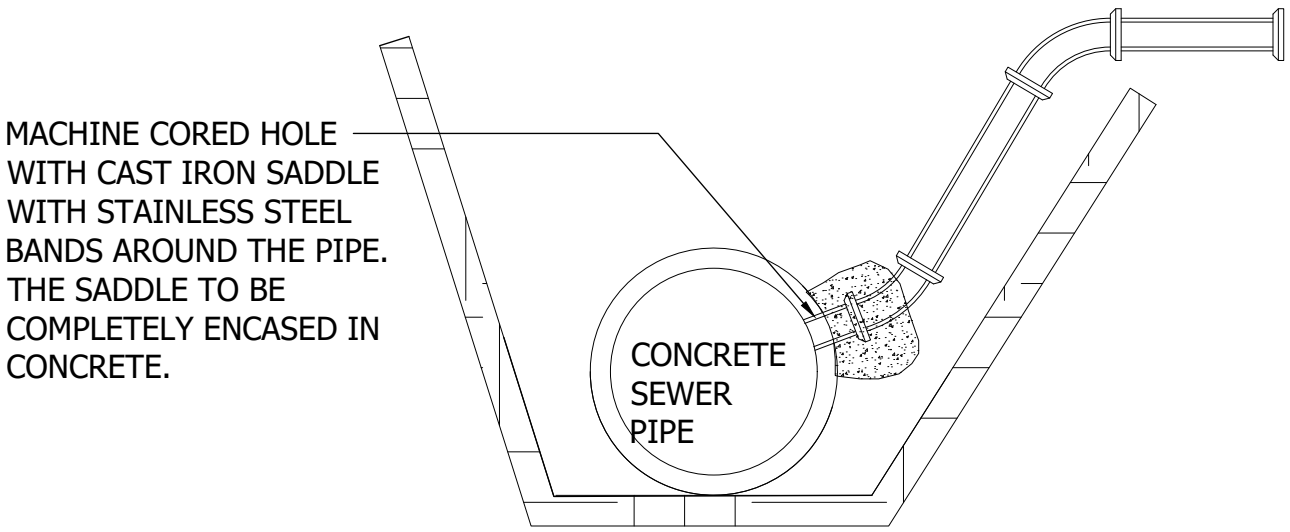


## CONCRETE SANITARY OR STORM SEWER

NOTE: SERVICE CONNECTIONS TO BE AT 2 O'CLOCK OR 10 O'CLOCK POSITION.

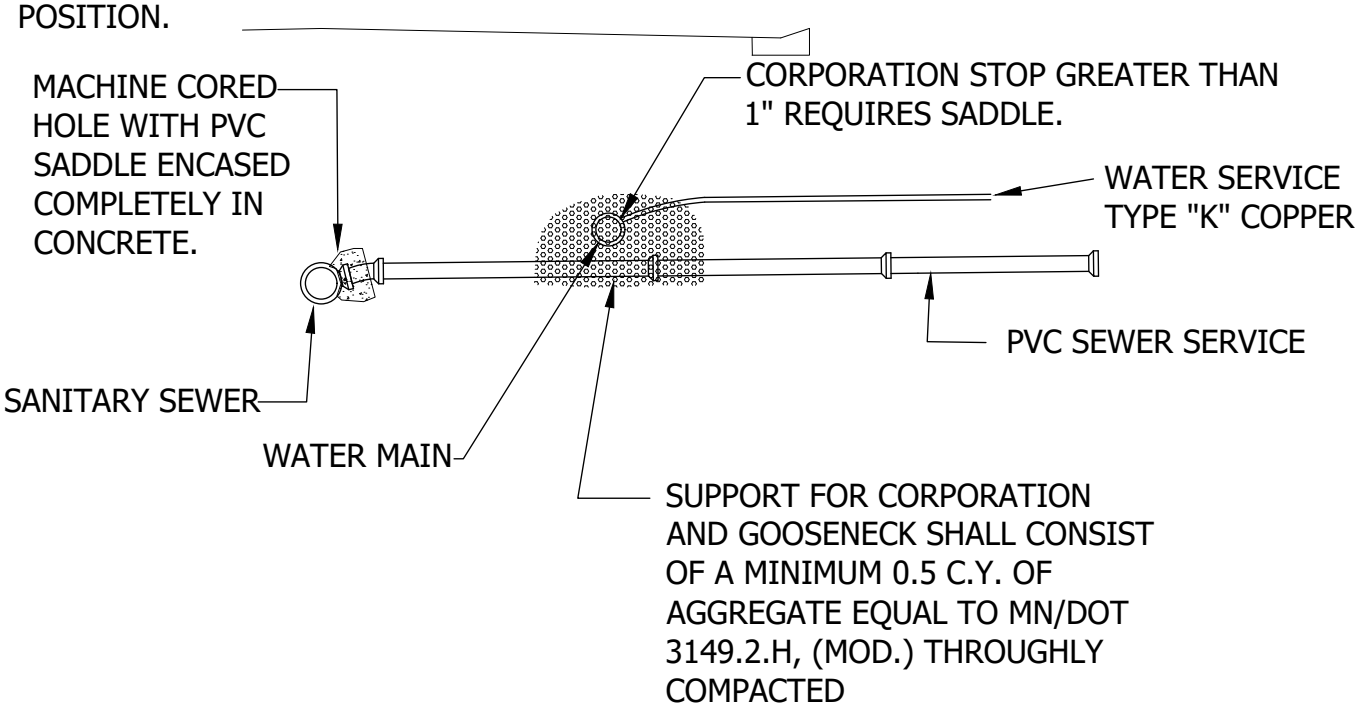


## WATER AND PVC SANITARY SEWER

Cottage Grove
Where Pride and Prosperity Meet

STANDARD DETAILS

PRIVATE CONNECTIONS TO PUBLIC UTILITIES

COTTAGE GROVE, MINNESOTA

JANUARY 2026

PLATE NO.
SER-2

48_SER2.DWG

CONTRACTOR TO PROVIDE THE FOLLOWING DIMENSIONS:

① CURB STOP TO SANITARY SEWER PIPE (PERPENDICULAR TO COPPER).
② SANITARY SEWER PIPE TO COPPER WATER LINE (PERPENDICULAR TO COPPER ALONG SANITARY SEWER MAIN) OR CORPORATION STOP TO SANITARY SEWER SERVICE LINE (PERPENDICULAR TO COPPER WATER LINE).
③ EXTEND CURB STOP 1' BEYOND R/W WHEN SIDEWALK IS PRESENT.

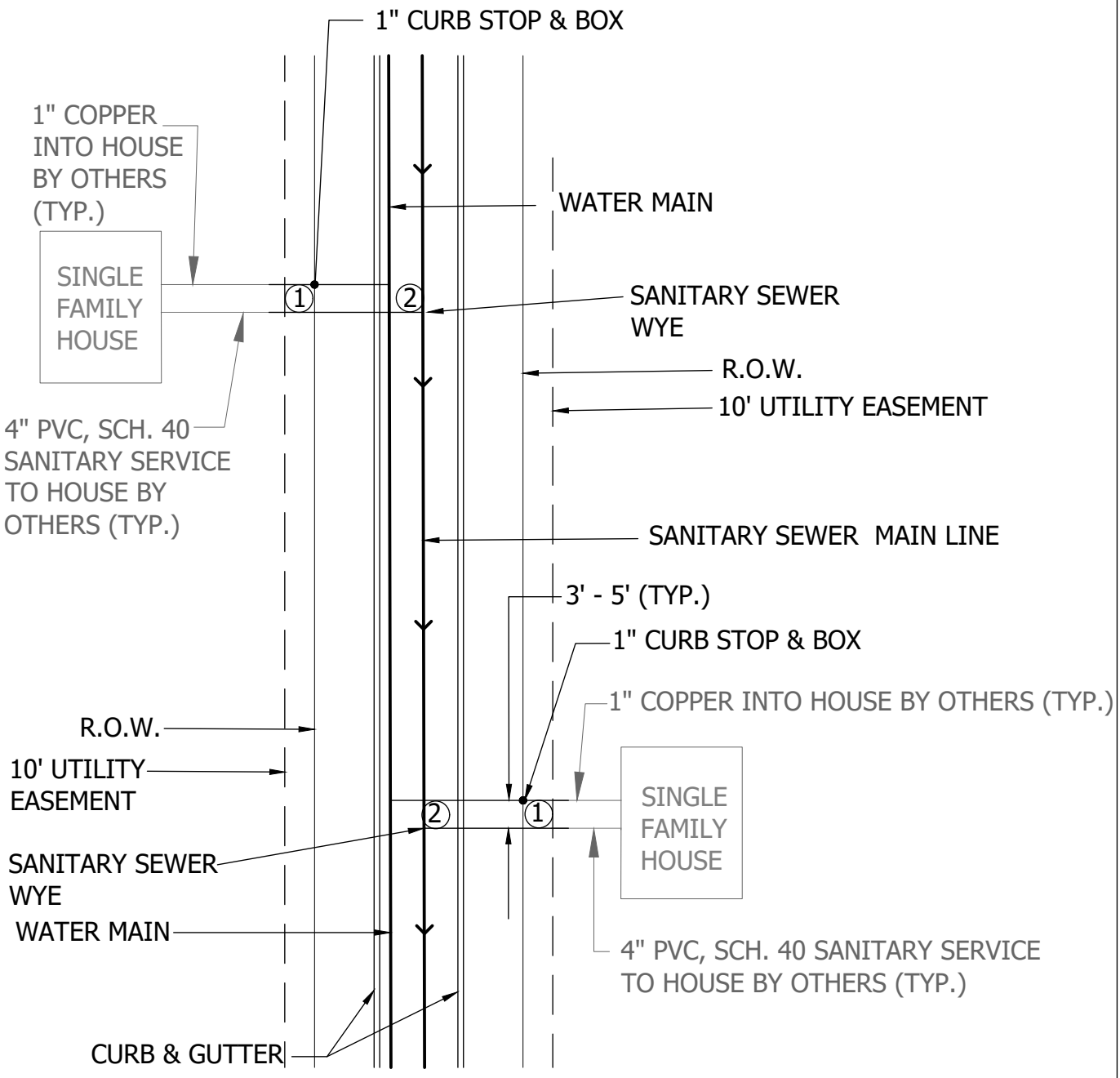


Cottage Grove
Where Pride and Prosperity Meet

## STANDARD DETAILS

LOCATING REQUIREMENTS FOR SINGLE FAMILY HOUSES

COTTAGE GROVE, MINNESOTA

JANUARY 2026

PLATE NO.
SER-5

48_SER5.DWG

CONTRACTOR TO PROVIDE THE FOLLOWING DIMENSIONS:

① WATER LINE PLUG TO SANITARY SEWER PLUG (PERPENDICULAR TO WATER LINE).

② SANITARY SEWER PIPE TO WATER LINE (PERPENDICULAR TO WATER LINE ALONG SANITARY SEWER MAIN) OR WATER MAIN TEE TO SANITARY SEWER LINE (PERPENDICULAR TO WATER LINE).

③ EXTEND CURB STOP 1' BEYOND R/W WHEN SIDEWALK IS PRESENT.

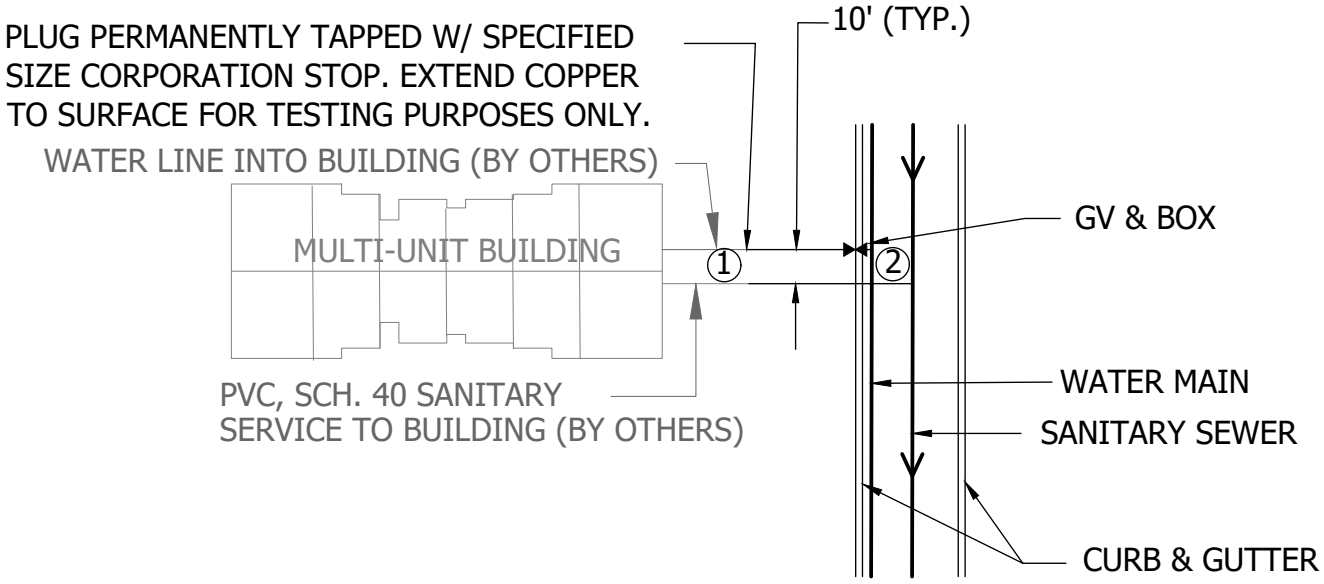


Cottage Grove
Where Pride and Prosperity Meet

# STANDARD DETAILS

LOCATING REQUIREMENTS FOR
MULTI-UNIT AND COMMERCIAL BUILDINGS

COTTAGE GROVE, MINNESOTA

JANUARY 2026

PLATE NO.
SER-6

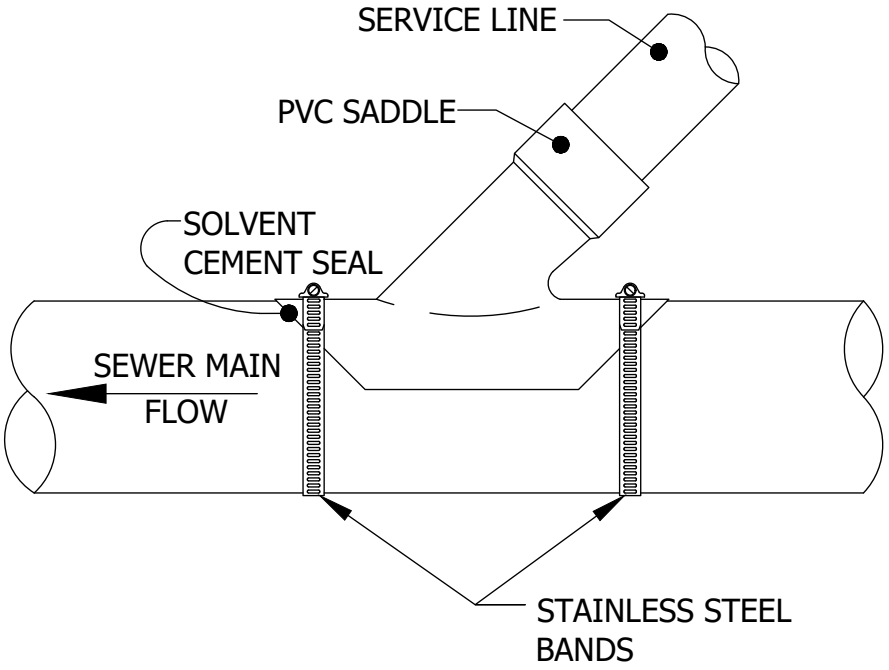


PVC MAIN

NOTES:
1. PVC SOLVENT CEMENT SHALL BE USED FOR PVC SADDLES.

Cottage Grove
Where Pride and Prosperity Meet

STANDARD DETAILS

PVC SANITARY SERVICE SADDLE CONNECTION

COTTAGE GROVE, MINNESOTA

JANUARY 2026

PLATE NO.
SER-7

48_SER7.DWG

NOTE:
SERVICE CONNECTIONS
TO BE AT 2 O'CLOCK OR 10 O'CLOCK

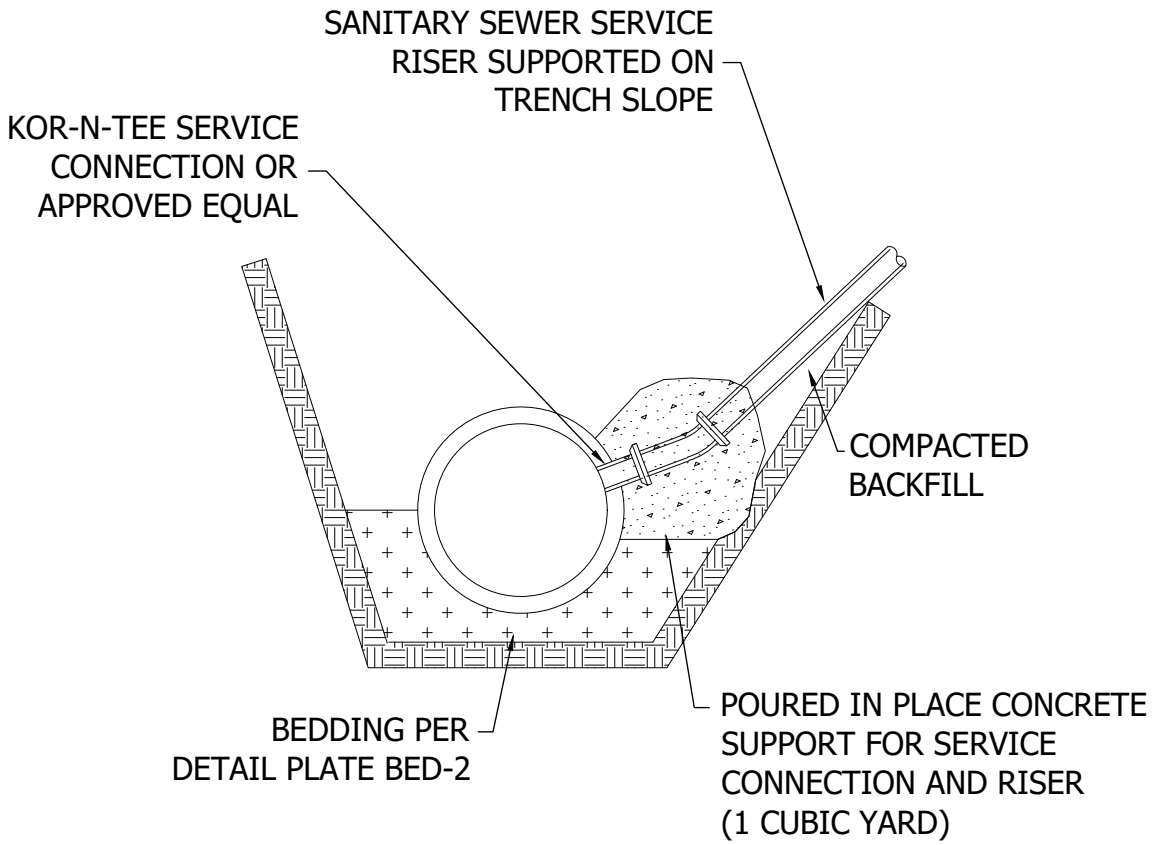


Cottage Grove
Where Pride and Prosperity Meet

STANDARD DETAILS

SERVICE CONNECTION TO RCP

COTTAGE GROVE, MINNESOTA

JANUARY 2026

PLATE NO.
SER-8

48_SER8.DWG

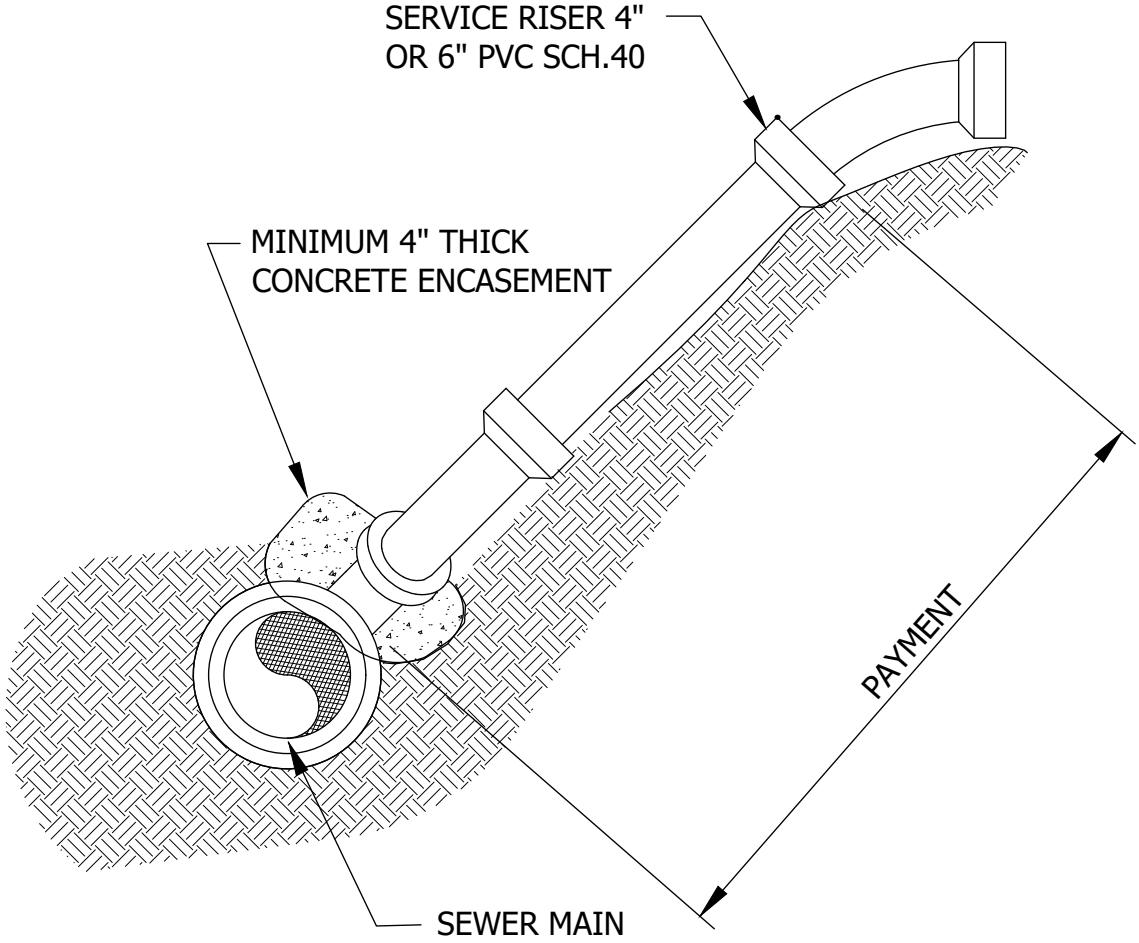


Cottage Grove
Where Pride and Prosperity Meet

STANDARD DETAILS

SERVICE RISER

COTTAGE GROVE, MINNESOTA

JANUARY 2026

PLATE NO.
SER-9

48_SER9.DWG

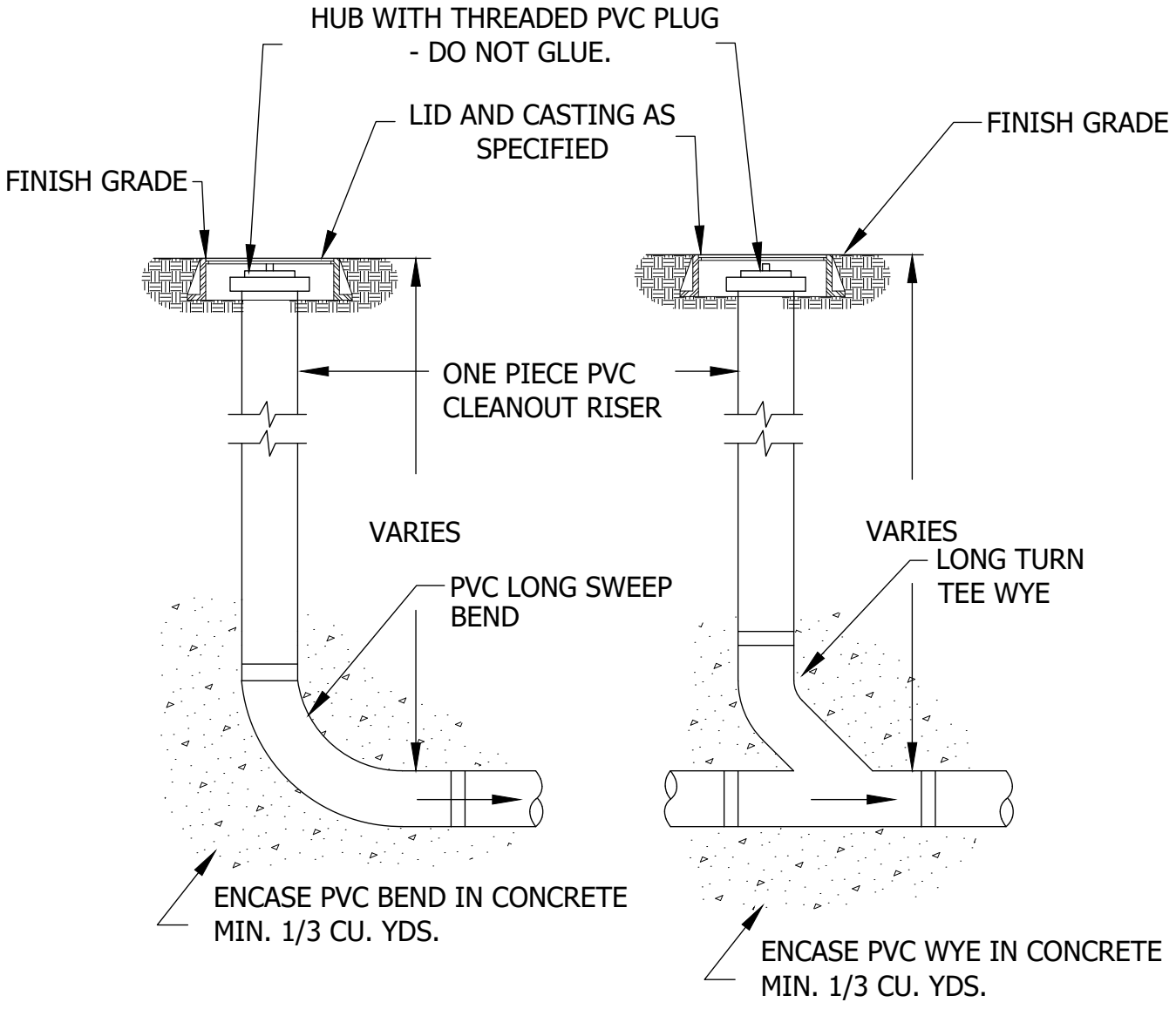


END OF LINE CLEANOUT

IN LINE CLEANOUT

Cottage Grove

Where Pride and Prosperity Meet

STANDARD DETAILS

PVC SERVICE LINE CLEANOUTS

COTTAGE GROVE, MINNESOTA

JANUARY 2026

PLATE NO.

SER-10

48_SER10.DWG

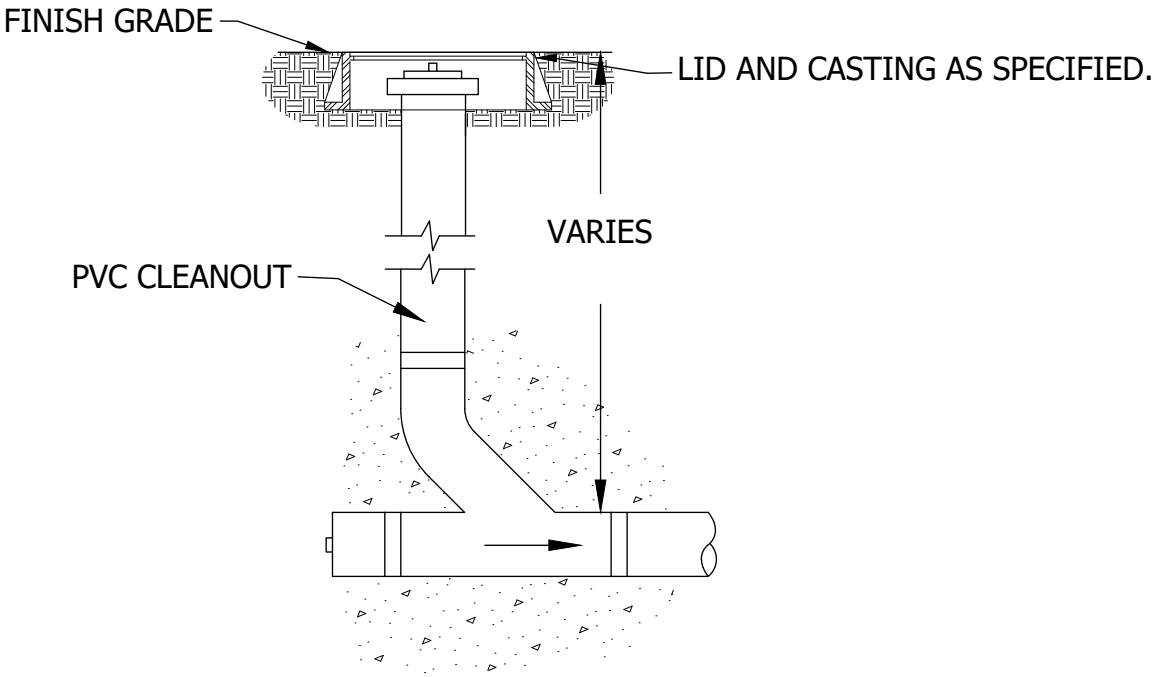


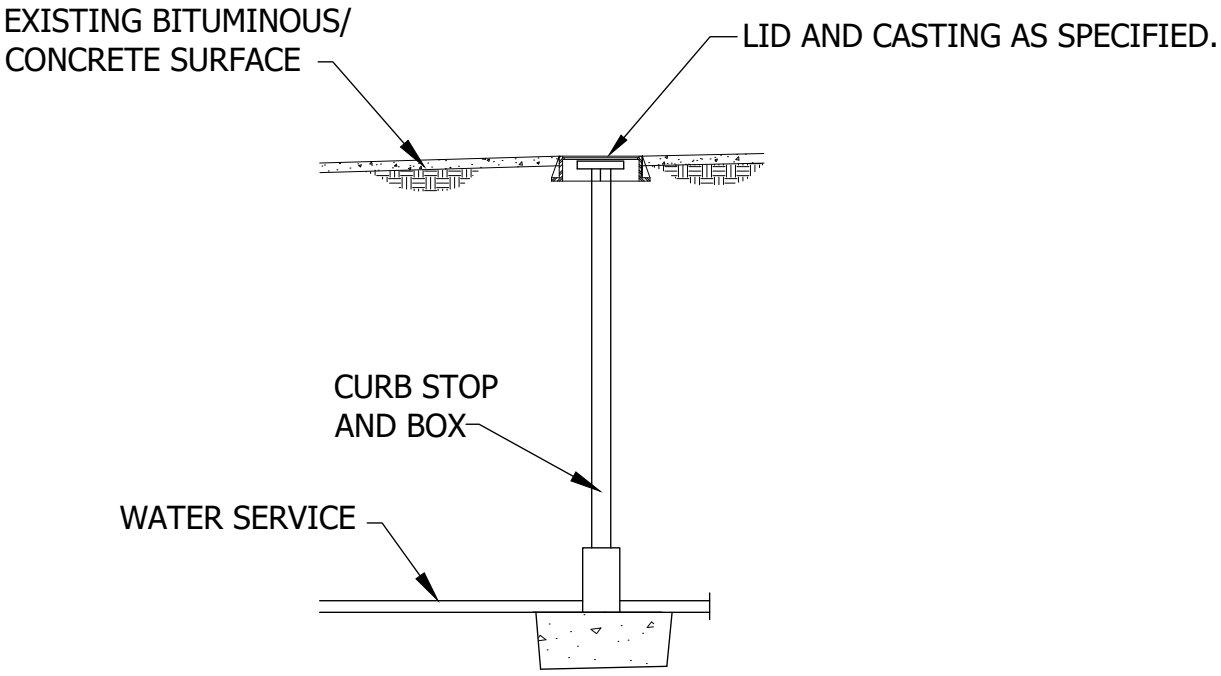


Cottage Grove

Where Pride and Prosperity Meet

# STANDARD DETAILS

CASTING PROTECTION AT CLEANOUT
CASTING PROTECTION AT CURB BOX

COTTAGE GROVE, MINNESOTA

JANUARY 2026

PLATE NO.
SER-11

48_SER11.DWG

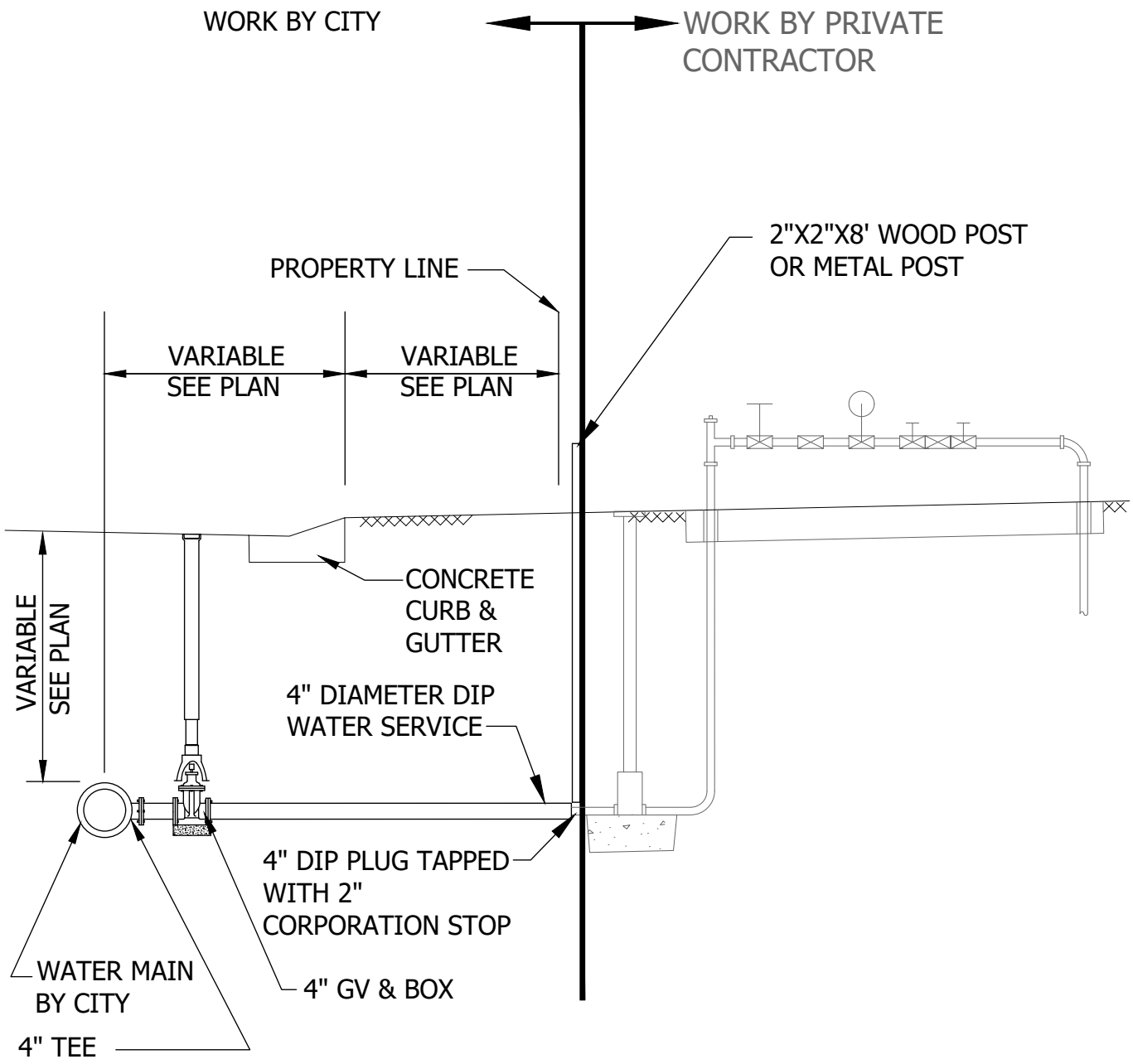


Cottage Grove
Where Pride and Prosperity Meet

STANDARD DETAILS

IRRIGATION SERVICE

COTTAGE GROVE, MINNESOTA

JANUARY 2026

PLATE NO.
SER-12

48_SER12.DWG

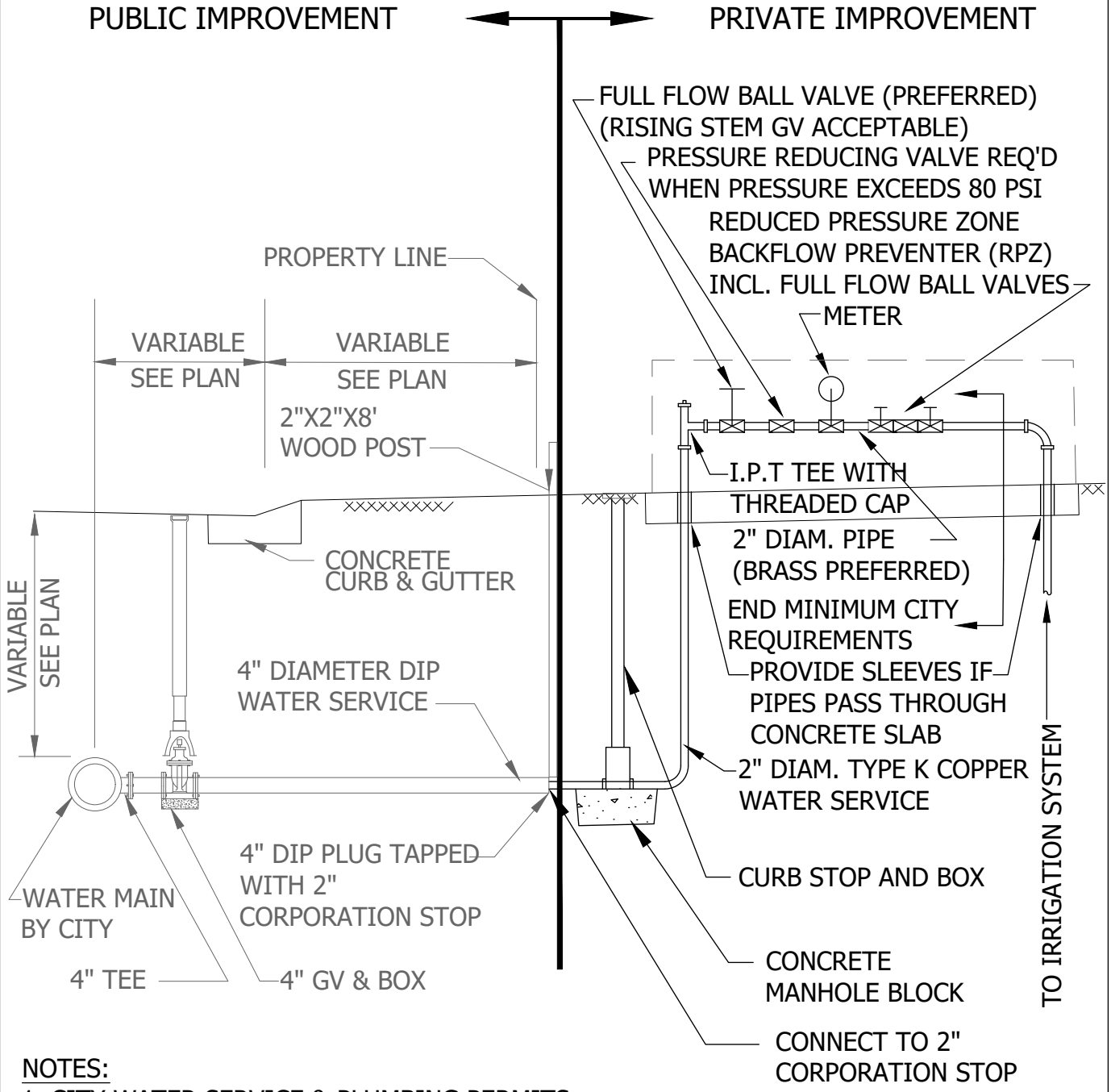


NOTES:

1. CITY WATER SERVICE & PLUMBING PERMITS REQUIRED FOR WORK BY PRIVATE CONTRACTORS.
2. ANNUAL TESTING OF RPZ REQUIRED
3. REQUIRED EQUIPMENT MUST BE ENCLOSED AND SUPPORTED.
4. 2" DIAMETER SIZE IS STANDARD. OTHER SIZES ALLOWED ONLY BY APPROVAL OF CITY.
5. SLEEVES FOR PIPES IN CONCRETE SLABS SHALL BE 4" DIAMETER PVC OR SIMILAR.

Cottage Grove
Where Pride and Prosperity Meet

## STANDARD DETAILS

IRRIGATION SERVICE BY
PRIVATE CONTRACTOR

COTTAGE GROVE, MINNESOTA

JANUARY 2026

PLATE NO.
SER-13

48_SER13.DWG

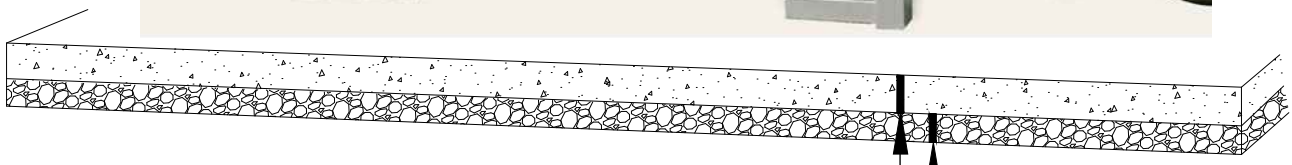


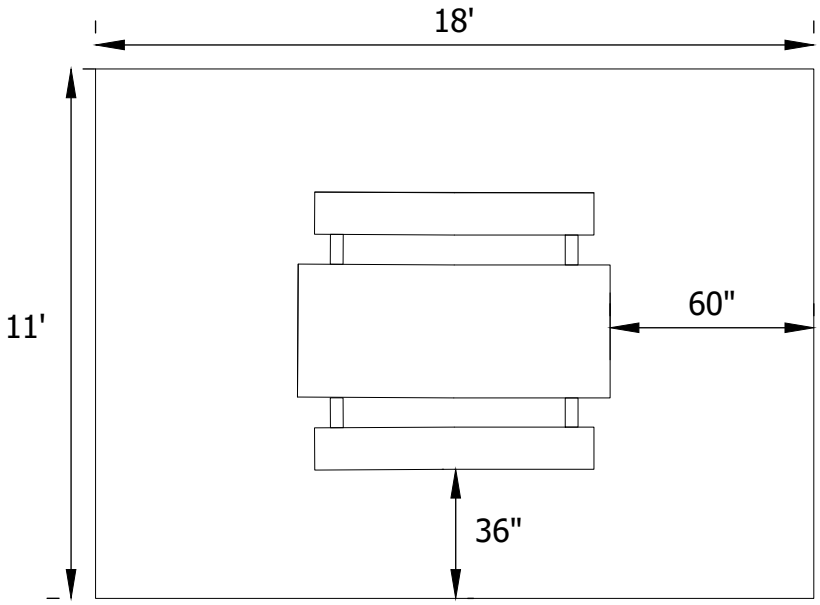


TOP VIEW

| DESCRIPTION | PATTERN |
|---|---|
| 8' TWIN PEDESTAL ADA TABLE WITH SQUARE FRAME | DIAMOND (V) |

Cottage Grove
Where Pride and Prosperity Meet

# STANDARD DETAILS

PICNIC TABLE

COTTAGE GROVE, MINNESOTA

JANUARY 2026

PLATE NO.
SPECIAL-1

48_SPECIAL1.DWG

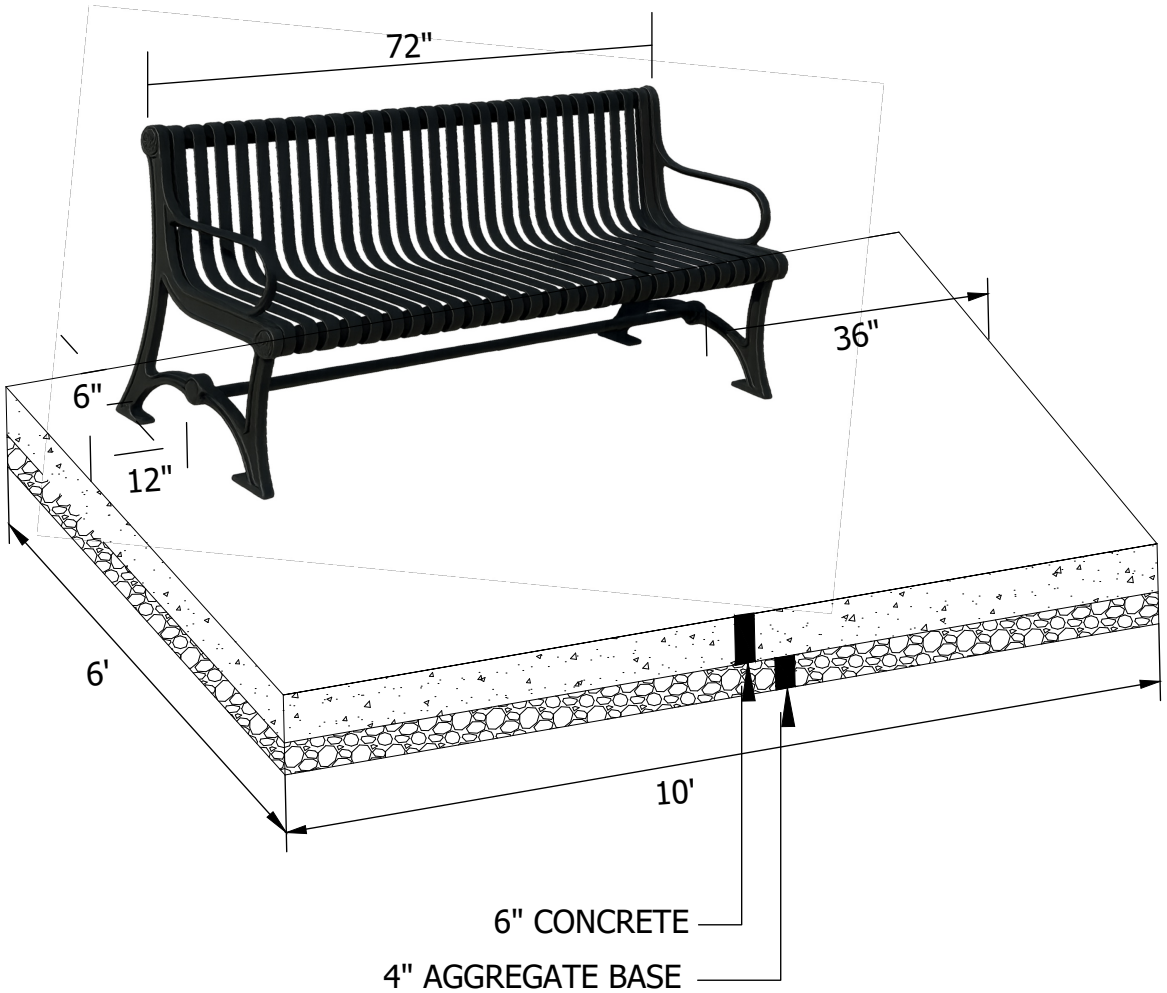


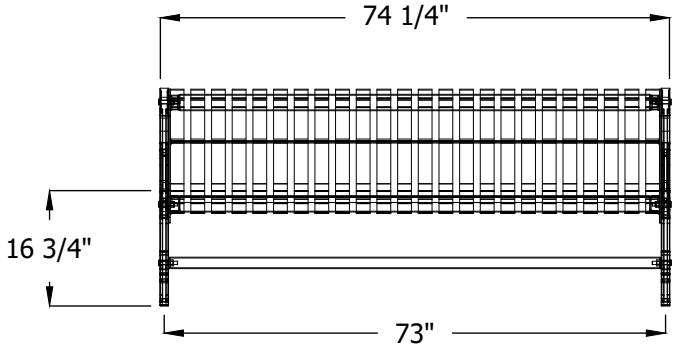


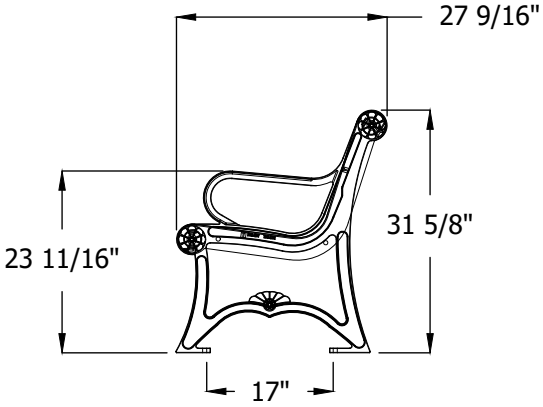


| Description | Pattern | Concrete |
|---|---|---|
| 6' Bench with back | Steel Strap (SS) | 6' x 10' |

Cottage Grove
Where Pride and Prosperity Meet

# STANDARD DETAILS

PARK BENCH

COTTAGE GROVE, MINNESOTA

JANUARY 2026

PLATE NO.
SPECIAL-2

48_SPECIAL2.DWG

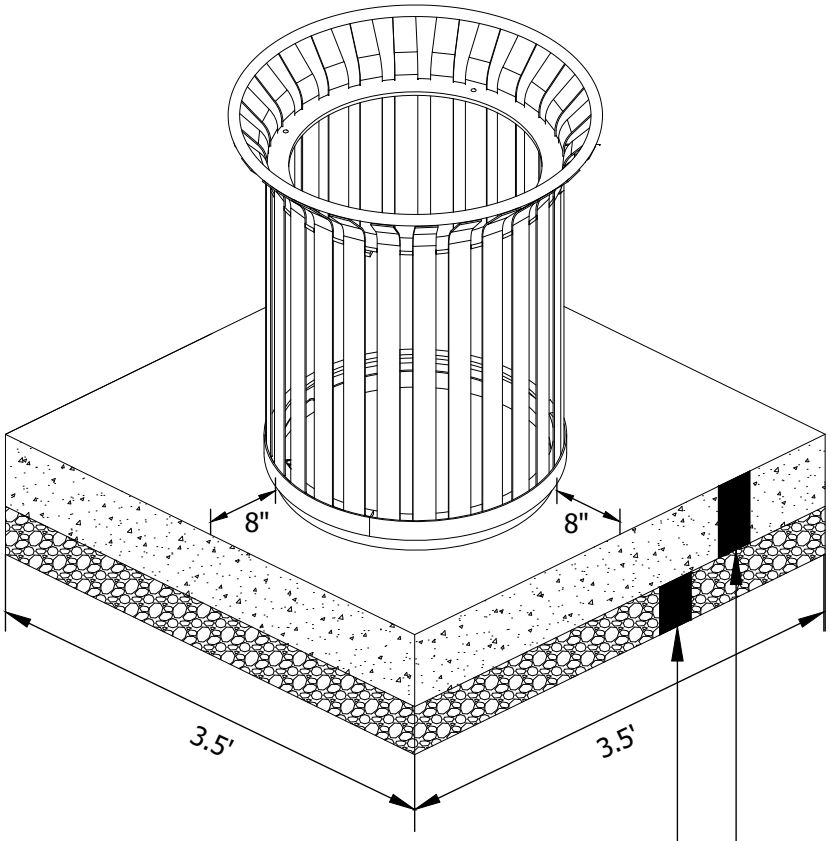


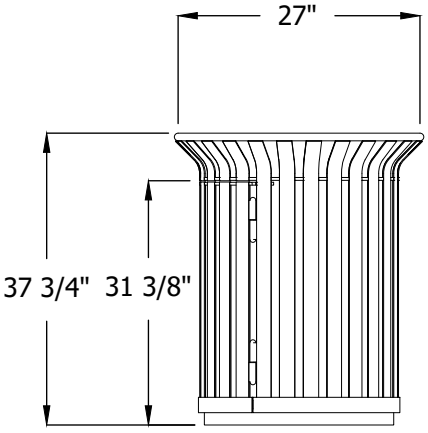


| Description | Pattern | Concrete |
|---|---|---|
| 36-Gallon Flat Top Lid | Steel Strap (SS) | 3.5' x 3.5' |

Cottage Grove
Where Pride and Prosperity Meet

# STANDARD DETAILS

TRASH CAN

COTTAGE GROVE, MINNESOTA

JANUARY 2026

PLATE NO.
SPECIAL-3

48_SPECIAL3.DWG

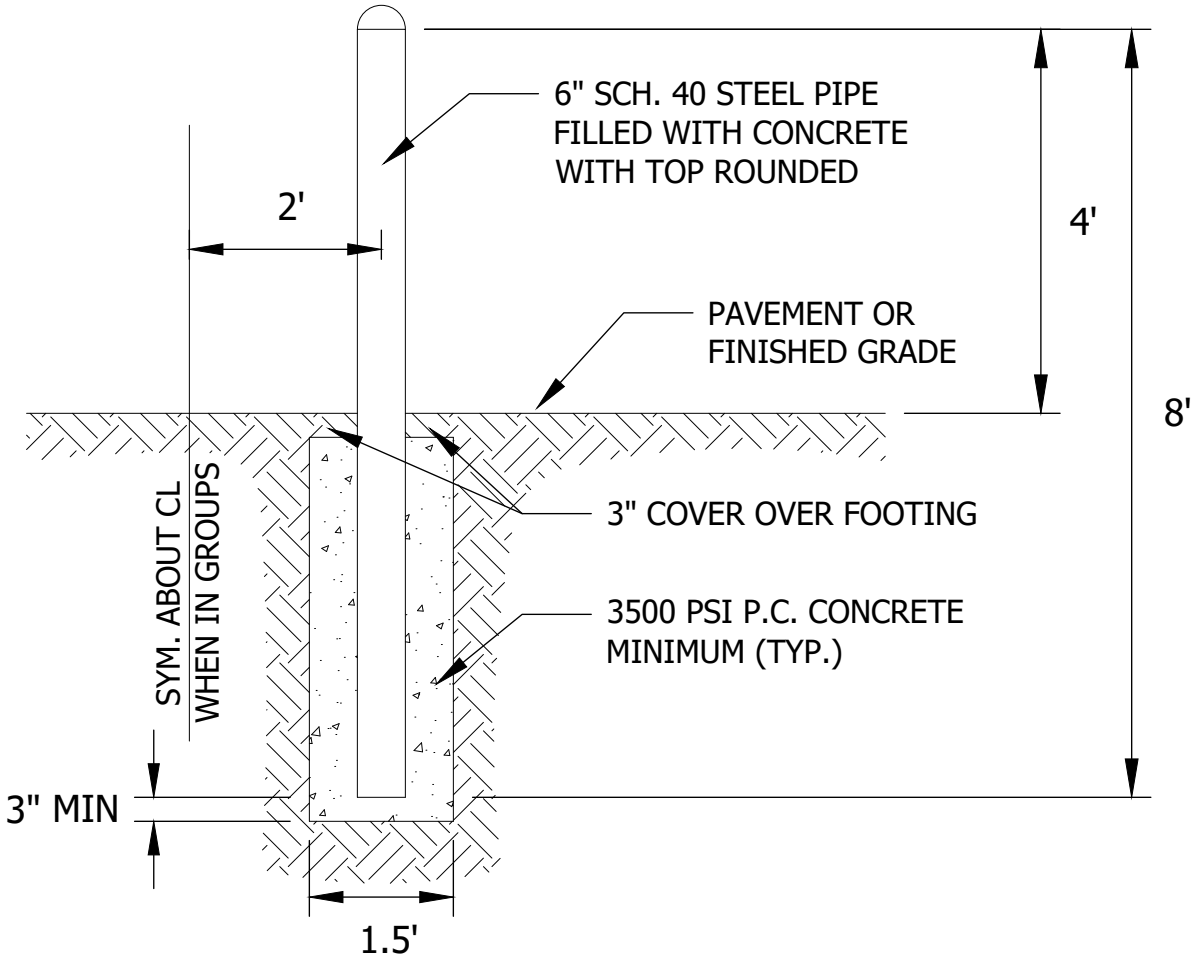


Cottage Grove
Where Pride and Prosperity Meet

STANDARD DETAILS

BOLLARD

COTTAGE GROVE, MINNESOTA

JANUARY 2026

PLATE NO.
SPECIAL-4

48_SPECIAL4.DWG

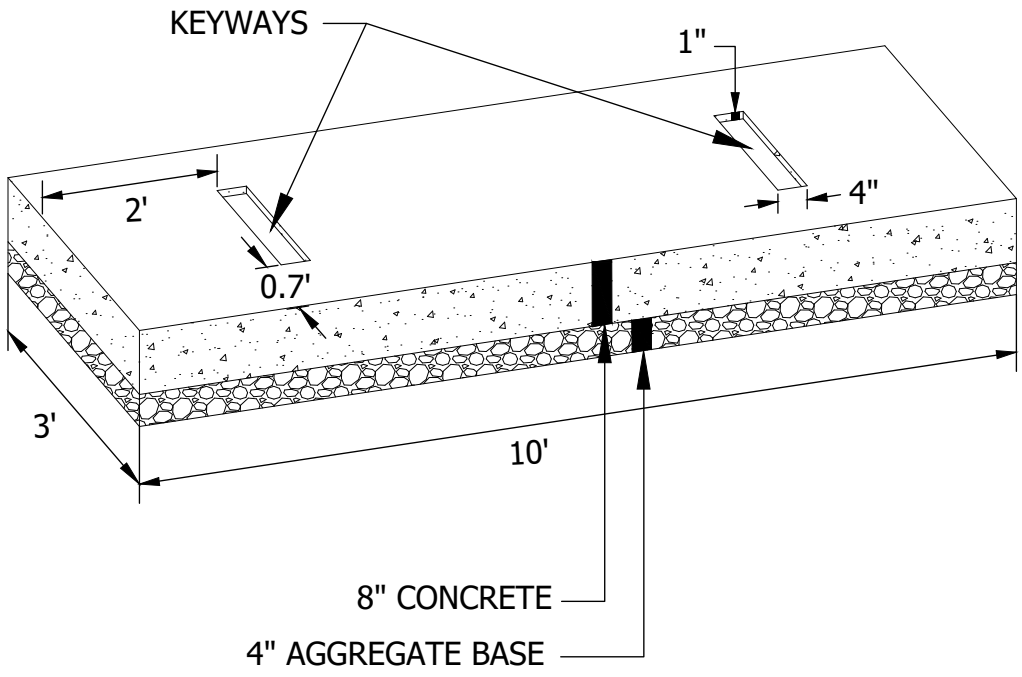


Cottage Grove
Where Pride and Prosperity Meet

# STANDARD DETAILS

PARK MONUMENT SIGN
CONCRETE SLAB

## COTTAGE GROVE, MINNESOTA

JANUARY 2026

PLATE NO.
SPECIAL-5

48_SPECIAL5.DWG

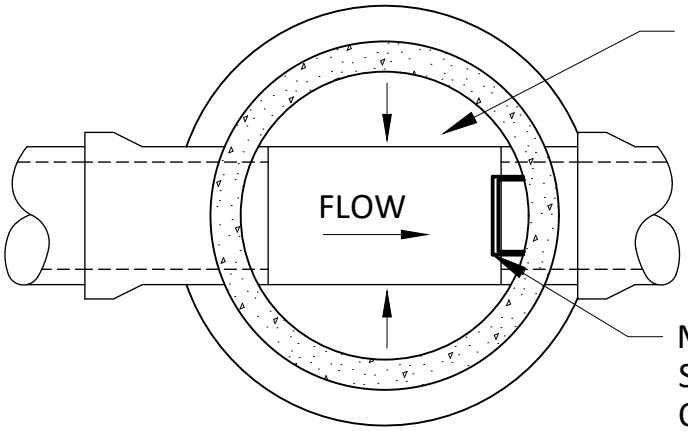


MORTAR BOTTOM OF MANHOLE TO 1/2 DIAMETER AT PIPE AND SLOPE MORTAR 2" TOWARD INVERT.

MANHOLE STEPS SHALL BE PLACED SO THAT OFFSET VERTICAL PORTION OF CONE IS FACING DOWNSTREAM.

PLAN

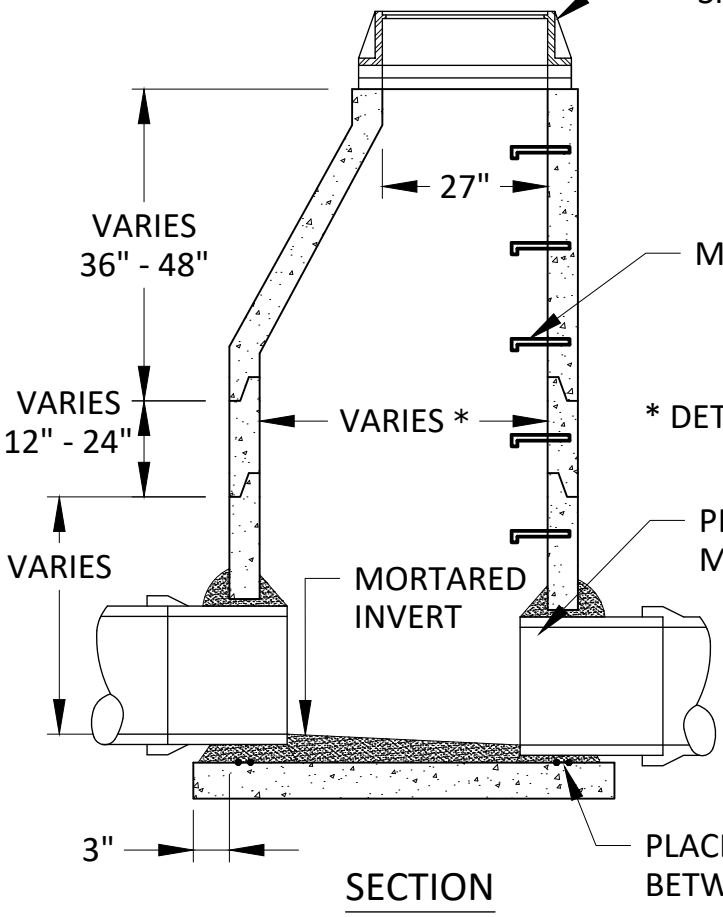


CASTING AND ADJUSTMENT RINGS AS SPECIFIED. PER DETAIL PLATE STR-23.

MANHOLE STEPS 16" MAX ON CENTER.

* DETERMINED BY PIPE SIZE

PIPE SHALL BE CUT TO BE 2"-4" INSIDE MANHOLE WALL.

DOGHOUSES SHALL BE MORTARED BOTH INSIDE AND OUTSIDE OF MANHOLE. WATERSTOP GASKET REQUIRED FOR POLYPROPYLENE PIPE.

PLACE 2 BEADS OF RAMNEK OR EQUAL, BETWEEN BOTTOM SLAB AND BARREL SECTION

SECTION

Cottage Grove

Where Pride and Prosperity Meet

STANDARD DETAILS

STORM SEWER MANHOLE

COTTAGE GROVE, MINNESOTA

JANUARY 2026

PLATE NO.

STO-1

48_STO1.DWG

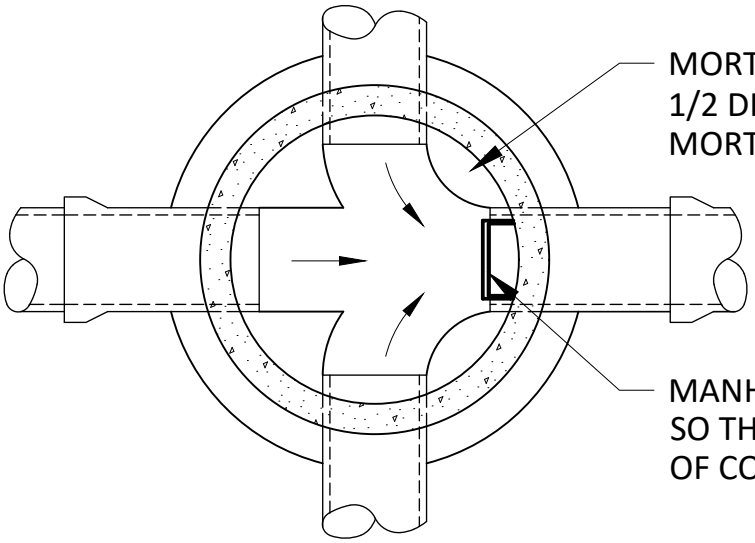

MORTAR BOTTOM OF MANHOLE TO 1/2 DIAMETER AT PIPE AND SLOPE MORTAR 2" TOWARD INVERT.

MANHOLE STEPS SHALL BE PLACED SO THAT OFFSET VERTICAL PORTION OF CONE IS FACING DOWNSTREAM.

PLAN

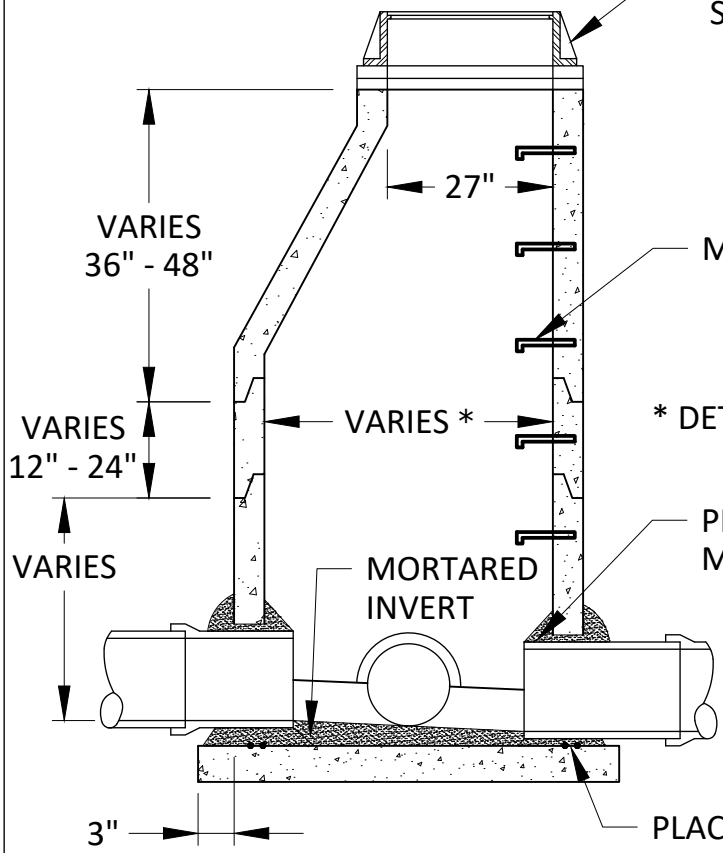


CASTING AND ADJUSTMENT RINGS AS SPECIFIED. PER DETAIL PLATE STR-23.

MANHOLE STEPS 16" MAX ON CENTER.

* DETERMINED BY PIPE SIZE

PIPE SHALL BE CUT TO BE 2"-4" INSIDE MANHOLE WALL.

DOGHOUSES SHALL BE MORTARED BOTH INSIDE AND OUTSIDE OF MANHOLE. WATERSTOP GASKET REQUIRED FOR POLYPROPYLENE PIPE.

PLACE 2 BEADS OF RAMNEK OR EQUAL, BETWEEN BOTTOM SLAB AND BARREL SECTION

SECTION

Cottage Grove
Where Pride and Prosperity Meet

STANDARD DETAILS

STORM SEWER
JUNCTION MANHOLE
COTTAGE GROVE, MINNESOTA

JANUARY 2026

PLATE NO.
STO-2

48_STO2.DWG

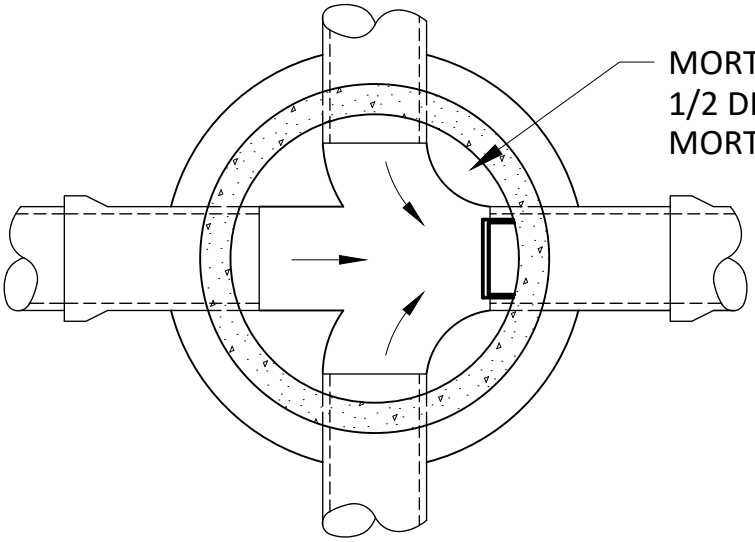

MORTAR BOTTOM OF MANHOLE TO 1/2 DIAMETER AT PIPE AND SLOPE MORTAR 2" TOWARD INVERT.

PLAN

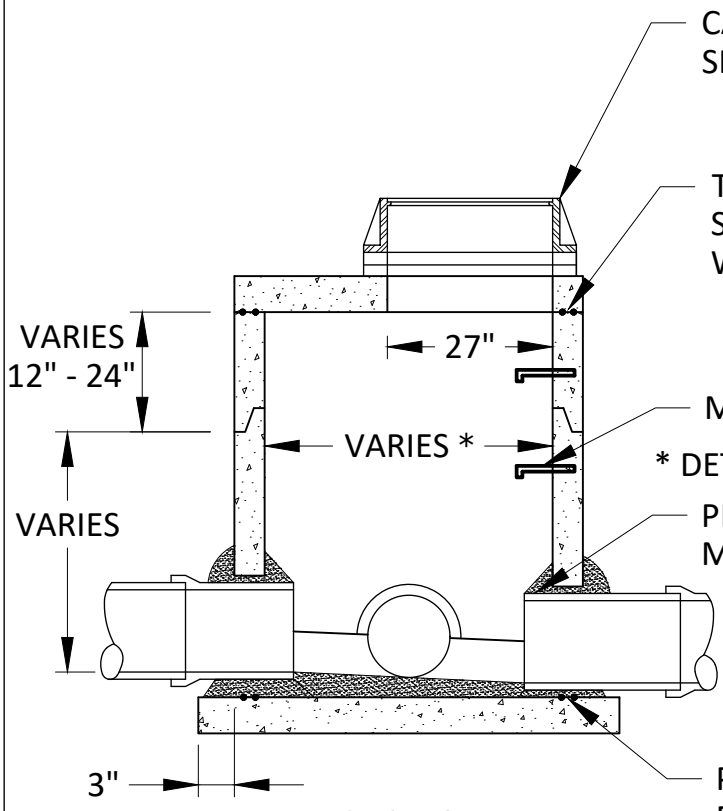


CASTING AND ADJUSTMENT RINGS AS SPECIFIED. PER DETAIL PLATE STR-23.

TOP OF BARREL SECTION BELOW TOP SLAB TO HAVE FLAT TOP EDGE SEALED WITH 2 BEADS OF RAMNEK OR EQUAL.

MANHOLE STEPS 16" MAX ON CENTER.

* DETERMINED BY PIPE SIZE

PIPE SHALL BE CUT TO BE 2"-4" INSIDE MANHOLE WALL.

DOGHOUSES SHALL BE MORTARED BOTH INSIDE AND OUTSIDE OF MANHOLE. WATERSTOP GASKET REQUIRED FOR POLYPROPYLENE PIPE.

PLACE 2 BEADS OF RAMNEK OR EQUAL BETWEEN BOTTOM SLAB AND BARREL SECTION.

SECTION

Cottage Grove

Where Pride and Prosperity Meet

STANDARD DETAILS

# STORM SEWER JUNCTION MANHOLE WITH REINFORCED TOP SLAB

## COTTAGE GROVE, MINNESOTA

JANUARY 2026

PLATE NO.

STO-3

48_STO3.DWG

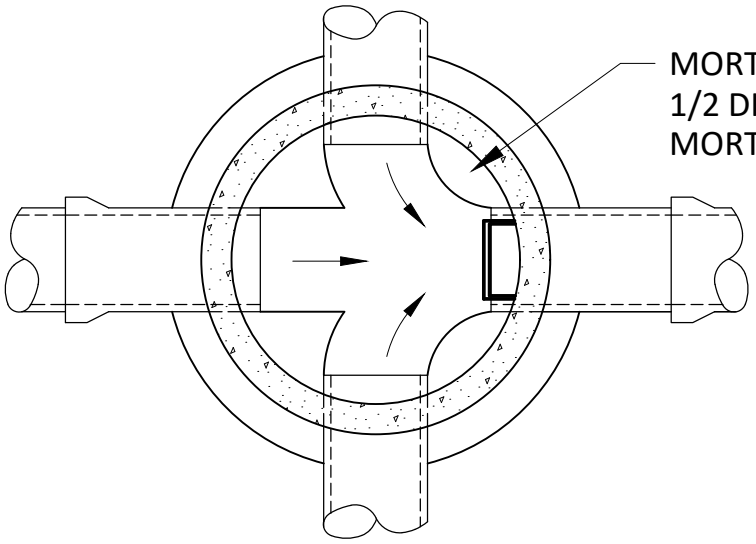

MORTAR BOTTOM OF MANHOLE TO 1/2 DIAMETER AT PIPE AND SLOPE MORTAR 2" TOWARD INVERT.

PLAN

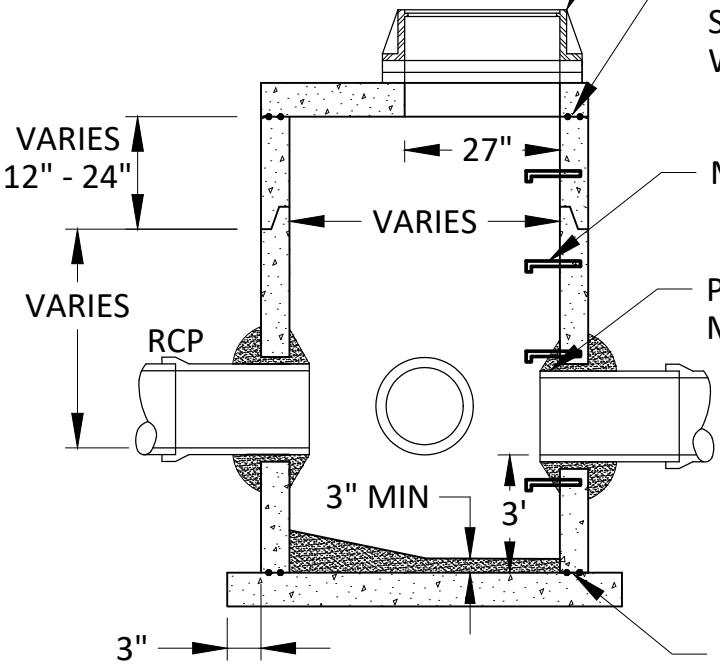


CASTING AND ADJUSTMENT RINGS AS SPECIFIED. PER DETAIL PLATE STR-23.

TOP OF BARREL SECTION BELOW TOP SLAB TO HAVE FLAT TOP EDGE SEALED WITH 2 BEADS OF RAMNEK OR EQUAL.

MANHOLE STEPS 16" MAX ON CENTER.

PIPE SHALL BE CUT TO BE 2"-4" INSIDE MANHOLE WALL.

DOGHOUSES SHALL BE MORTARED BOTH INSIDE AND OUTSIDE OF MANHOLE. WATERSTOP GASKET REQUIRED FOR POLYPROPYLENE PIPE.

PLACE 2 BEADS OF RAMNEK OR EQUAL BETWEEN BOTTOM SLAB AND BARREL SECTION.

SECTION

Cottage Grove
Where Pride and Prosperity Meet

STANDARD DETAILS

# STORM SEWER JUNCTION MANHOLE WITH REINFORCED TOP SLAB AND SUMP

COTTAGE GROVE, MINNESOTA

JANUARY 2026

PLATE NO.
STO-4

48_STO4.DWG

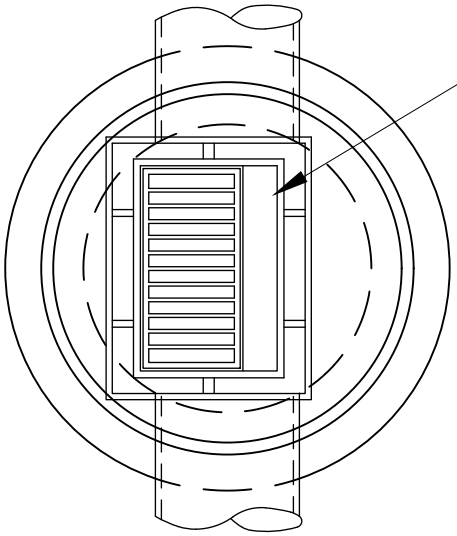

24"X36" SLAB OPENING FOR CASTING SPECIFIED

DIMENSION FROM BACK OF CURB TO CENTER OF PIPE:
4' DIA. MH - 9" IN FROM BACK OF CURB
5' DIA. MH - 3" IN FROM BACK OF CURB
6' DIA. MH - 3" BEHIND BACK OF CURB
7' DIA. MH - 9" BEHIND BACK OF CURB
8' DIA. MH - 15" BEHIND BACK OF CURB

PLAN

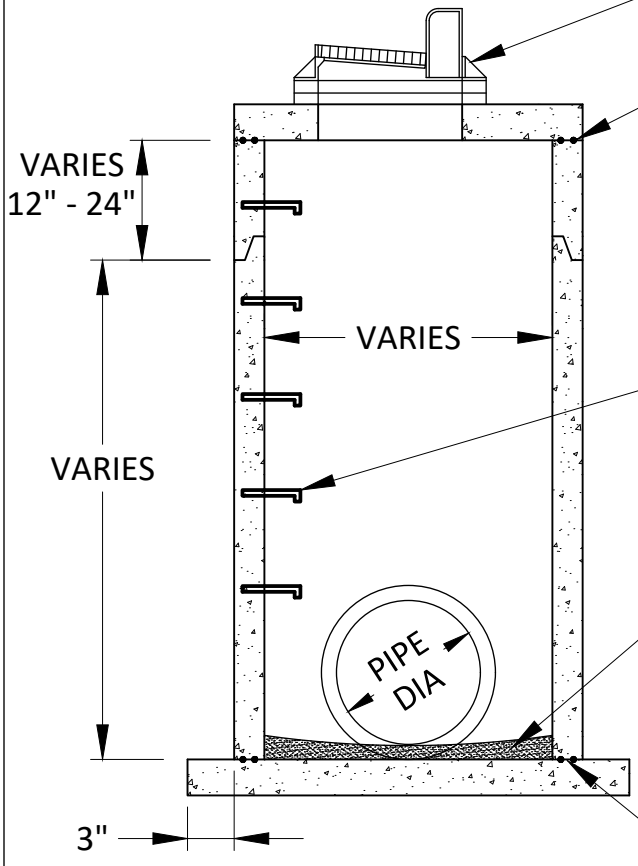


CASTING AND ADJUSTMENT RINGS AS SPECIFIED. PER DETAIL PLATE STR-23.

TOP OF BARREL SECTION BELOW TOP SLAB TO HAVE FLAT TOP EDGE SEALED WITH 2 BEADS OF RAMNEK OR EQUAL.

MANHOLE STEPS 16" MAX ON CENTER.

MORTAR BOTTOM
DOGHOUSES SHALL BE MORTARED BOTH INSIDE AND OUTSIDE OF MANHOLE. WATERSTOP GASKET REQUIRED FOR POLYPROPYLENE PIPE.

PLACE 2 BEADS OF RAMNEK OR EQUAL BETWEEN BOTTOM SLAB AND BARREL SECTION.

SECTION

Cottage Grove
Where Pride and Prosperity Meet

STANDARD DETAILS

CATCH BASIN MANHOLE

COTTAGE GROVE, MINNESOTA

JANUARY 2026

PLATE NO.
STO-5

48_STO5.DWG

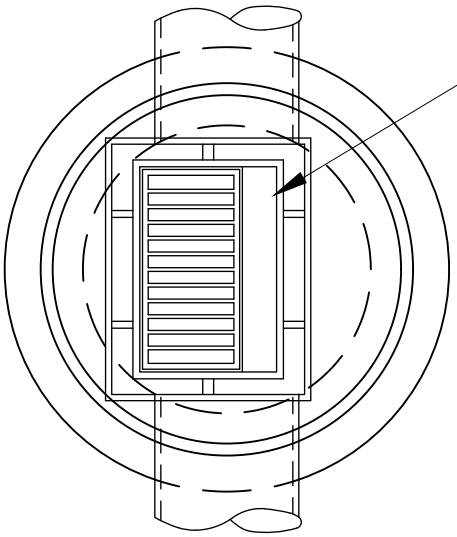

PLAN

24"X36" SLAB OPENING FOR CASTING SPECIFIED

DIMENSION FROM BACK OF CURB TO CENTER OF PIPE:
4' DIA. MH - 9" IN FROM BACK OF CURB
5' DIA. MH - 3" IN FROM BACK OF CURB
6' DIA. MH - 3" BEHIND BACK OF CURB
7' DIA. MH - 9" BEHIND BACK OF CURB
8' DIA. MH - 15" BEHIND BACK OF CURB

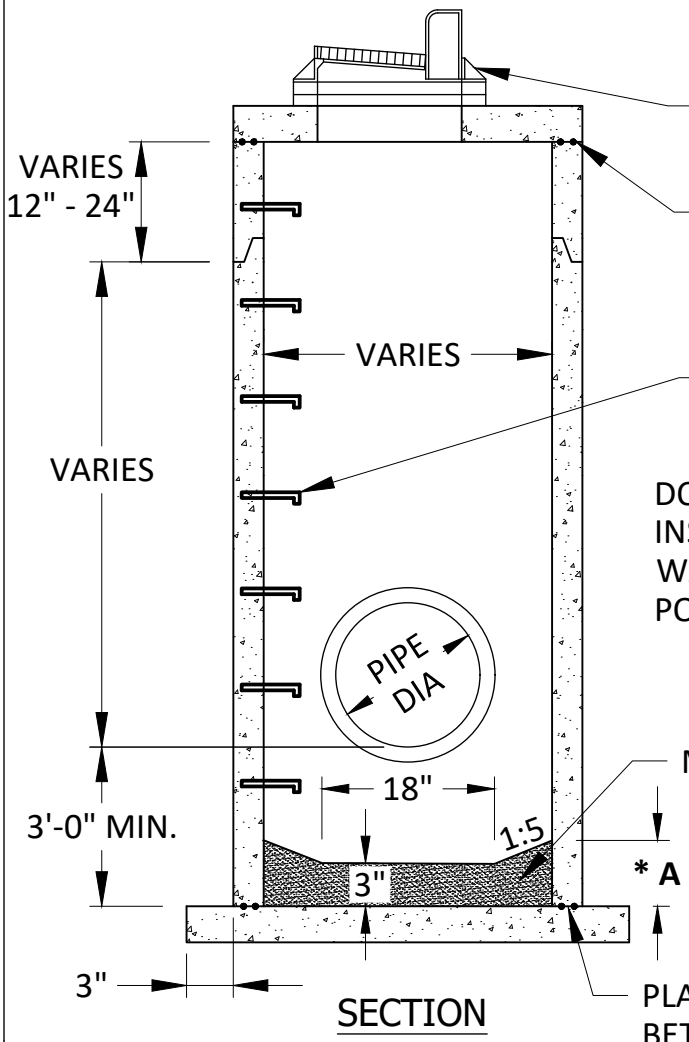


SECTION

CASTING AND ADJUSTMENT RINGS AS SPECIFIED. PER DETAIL PLATE STR-23.

TOP OF BARREL SECTION BELOW TOP SLAB TO HAVE FLAT TOP EDGE SEALED WITH 2 BEADS OF RAMNEK OR EQUAL.

MANHOLE STEPS 16" MAX ON CENTER.

DOGHOUSES SHALL BE MORTARED BOTH INSIDE AND OUTSIDE OF MANHOLE. WATERSTOP GASKET REQUIRED FOR POLYPROPYLENE PIPE.

MORTAR BOTTOM

| | * A |
|---|---|
| 4' DIA. STRUCTURE | 6" |
| 5' DIA. STRUCTURE | 8" |
| 6' DIA. STRUCTURE | 9" |

PLACE 2 BEADS OF RAMNEK OR EQUAL BETWEEN BOTTOM SLAB AND BARREL SECTION.

Cottage Grove
Where Pride and Prosperity Meet

STANDARD DETAILS

CATCH BASIN MANHOLE WITH SUMP

COTTAGE GROVE, MINNESOTA

JANUARY 2026

PLATE NO.
STO-6

48_STO6.DWG

NOTE: VANE GRATE SHOWN

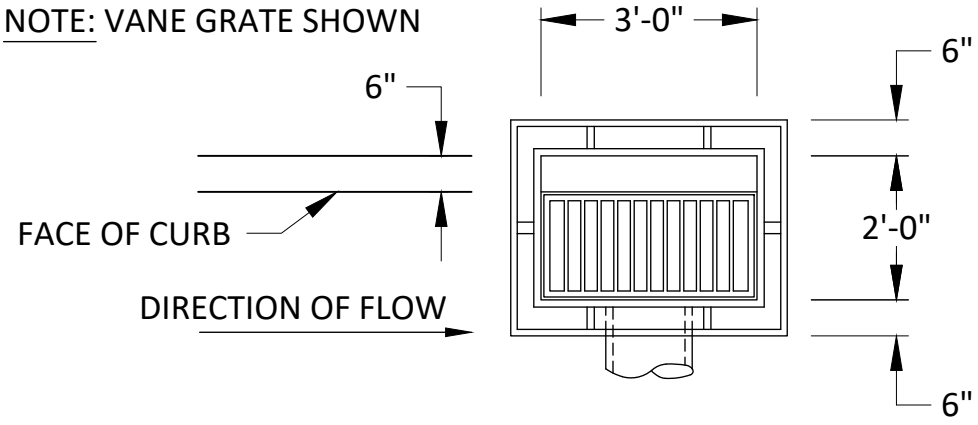


PLAN

CASTING AND ADJUSTMENT RINGS AS SPECIFIED. PER DETAIL PLATE STR-23.

DOGHOUSES SHALL BE MORTARED BOTH INSIDE AND OUTSIDE OF MANHOLE. WATERSTOP GASKET REQUIRED FOR POLYPROPYLENE PIPE.

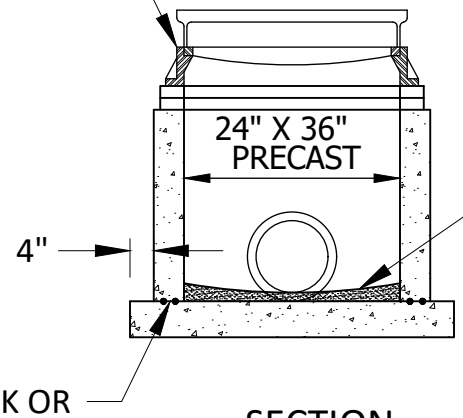


PLACE 2 BEADS OF RAMNEK OR EQUAL BETWEEN BOTTOM SLAB AND BARREL SECTION.

SECTION

Cottage Grove
Where Pride and Prosperity Meet

STANDARD DETAILS

CATCH BASIN

COTTAGE GROVE, MINNESOTA

JANUARY 2026

PLATE NO.
STO-7

48_STO7.DWG

NOTE: VANE GRATE SHOWN

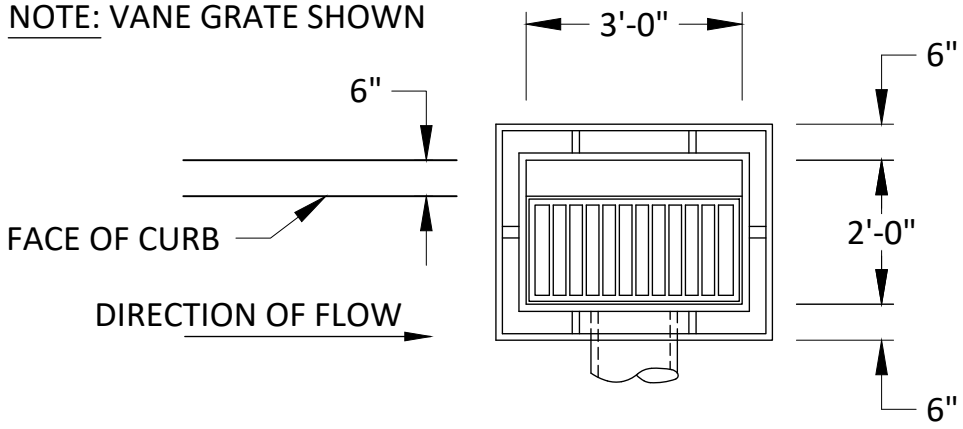


PLAN

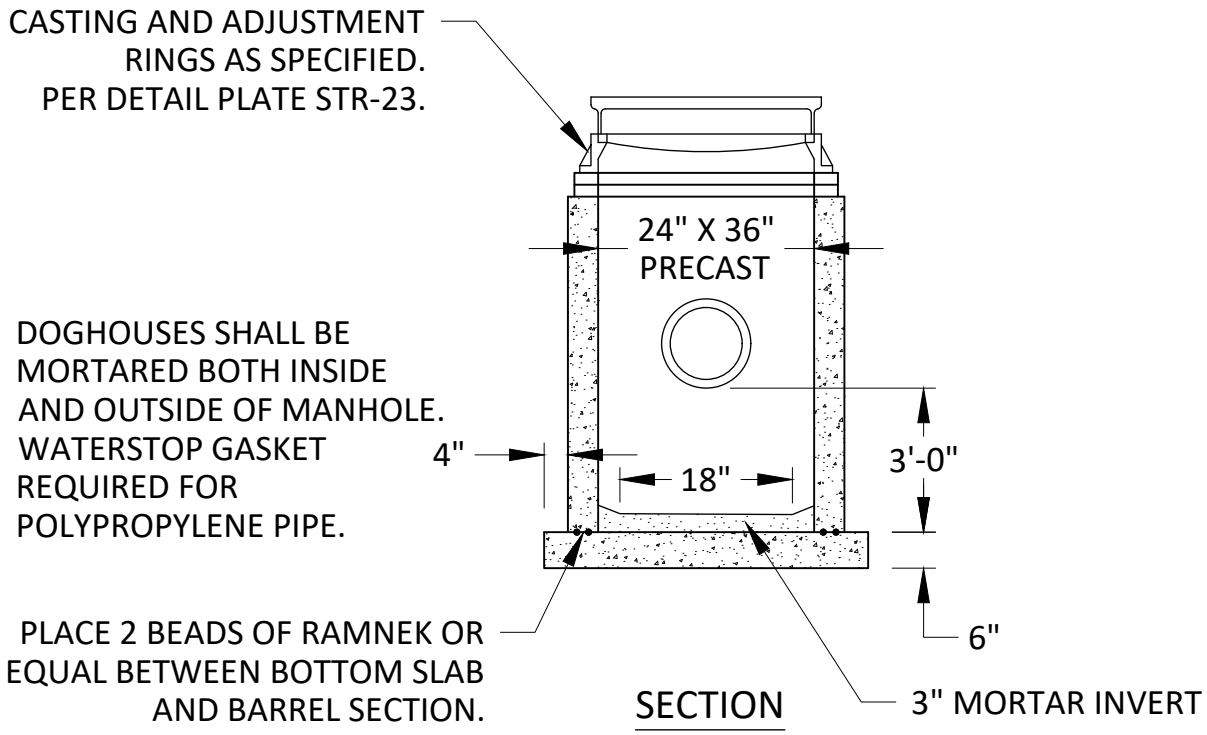


SECTION

Cottage Grove
Where Pride and Prosperity Meet

STANDARD DETAILS

CATCH BASIN WITH SUMP

COTTAGE GROVE, MINNESOTA

JANUARY 2026

PLATE NO.
STO-8

48_STO8.DWG

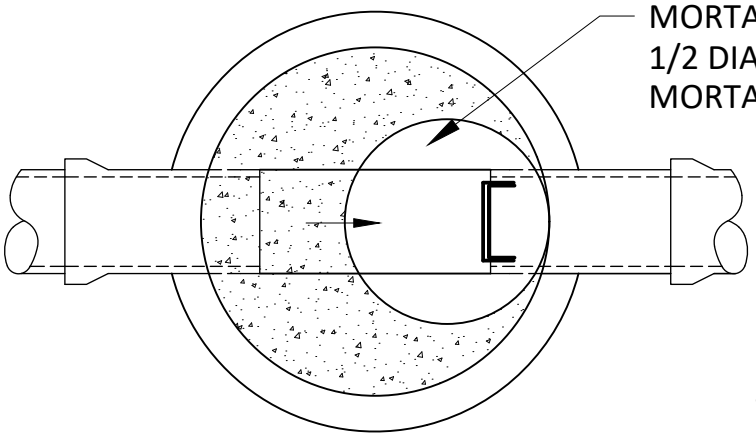


PLAN

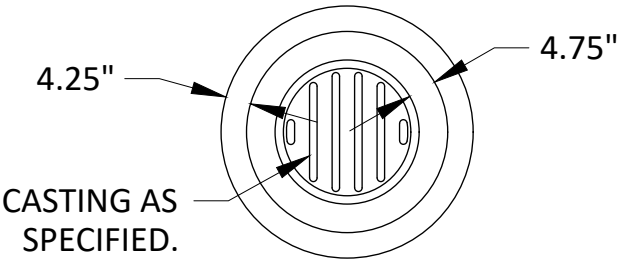


TOP VIEW - GRATE FRAME

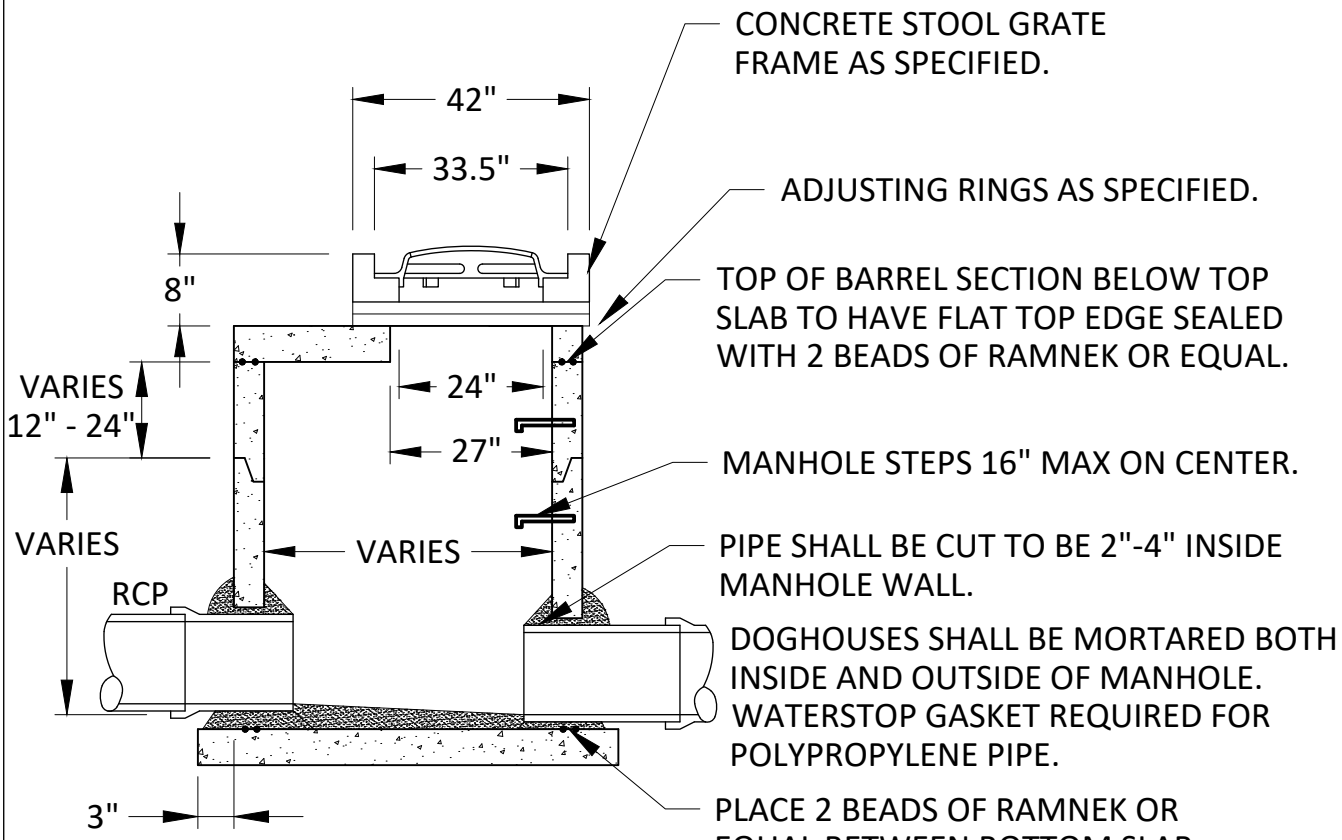


SECTION

Cottage Grove
Where Pride and Prosperity Meet

# STANDARD DETAILS

OFF STREET CATCH BASIN
WITH CONCRETE STOOL GRATE FRAME

COTTAGE GROVE, MINNESOTA

JANUARY 2026

PLATE NO.
STO-9

48_STO9.DWG

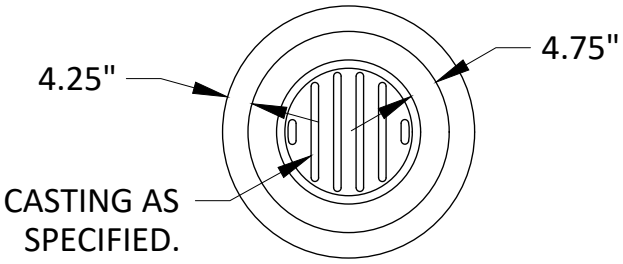


TOP VIEW - GRATE FRAME

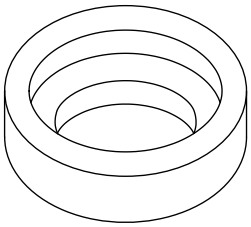

ISOMETRIC

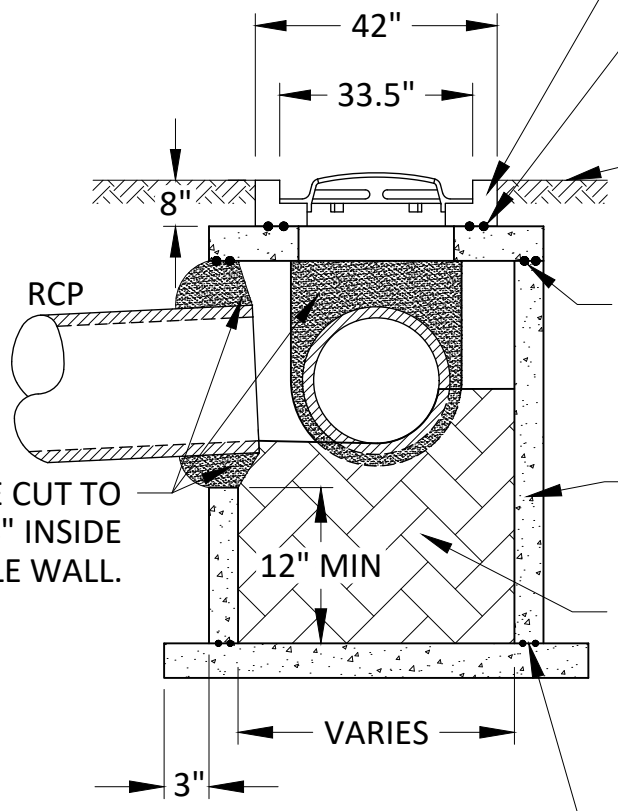


CONCRETE STOOL GRATE FRAME AS SPECIFIED.

RAMNEK SEAL OR EQUAL, CONTINUOUS. ADJUSTING RINGS AS SPECIFIED.

FINISHED SOD ELEVATION FLUSH WITH CONCRETE STOOL GRATE FRAME (TYP).

TOP OF BARREL SECTION BELOW TOP SLAB TO HAVE FLAT TOP EDGE SEALED WITH 2 BEADS OF RAMNEK OR EQUAL.

PRECAST STORM SEWER STRUCTURE UNIT

FILL ENTIRE SUMP WITH MORTAR, AND COMPLETE INVERT UNLESS NOTED AS SUMP STRUCTURE.

PLACE 2 BEADS OF RAMNEK OR EQUAL BETWEEN BOTTOM SLAB AND BARREL SECTION.

DOGHOUSES SHALL BE MORTARED BOTH INSIDE AND OUTSIDE OF MANHOLE. WATERSTOP GASKET REQUIRED FOR POLYPROPYLENE PIPE.

SECTION

Cottage Grove

Where Pride and Prosperity Meet

STANDARD DETAILS

# SHALLOW OFF STREET CATCH BASIN WITH CONCRETE STOOL GRATE FRAME

## COTTAGE GROVE, MINNESOTA

JANUARY 2026

PLATE NO.

STO-10

48_STO10.DWG

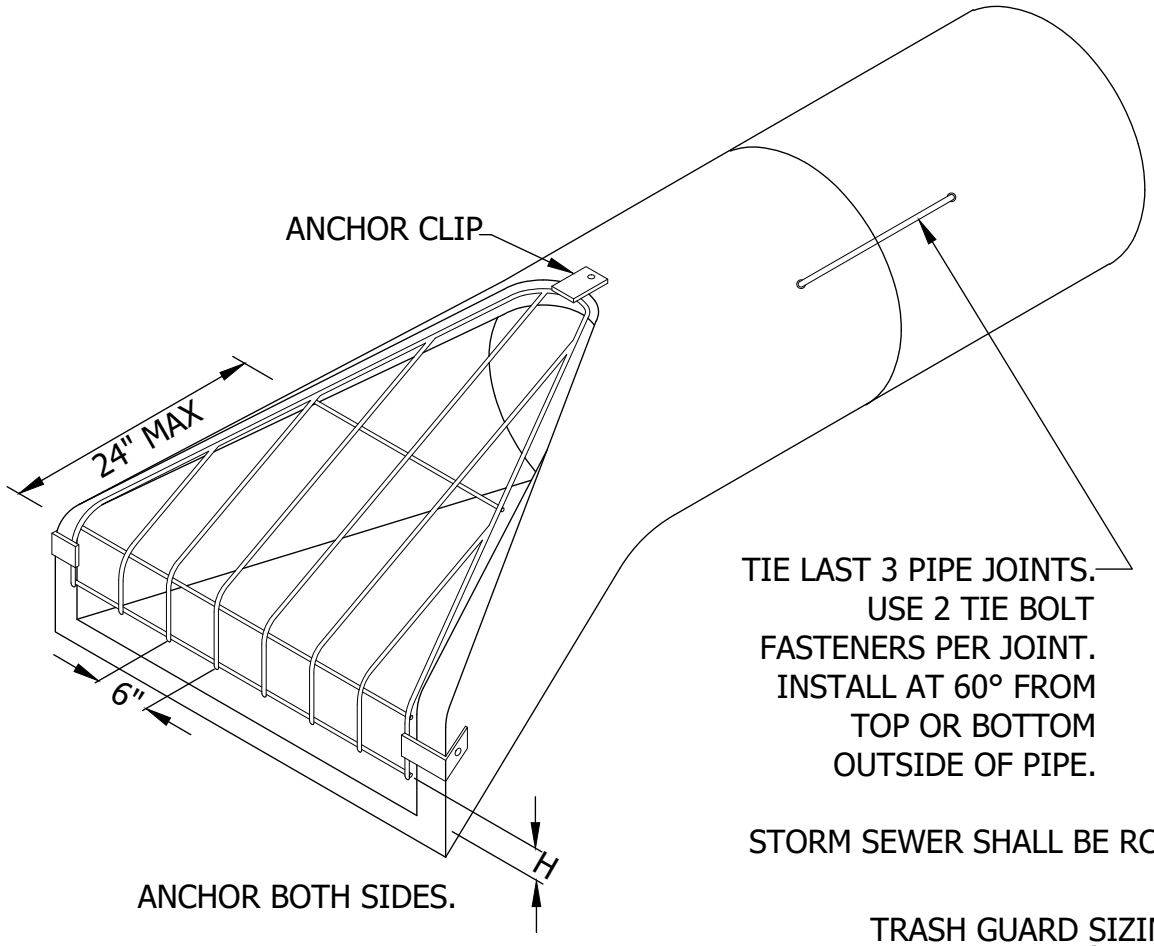


ANCHOR BOTH SIDES.

ISOMETRIC

STORM SEWER SHALL BE RCP.

TRASH GUARD SIZING

| PIPE SIZE | BARS | `H' | BOLTS |
|---|---|---|---|
| 12"-18" | 3/4"Ø | 3"-4" | 5/8" |
| 21"-42" | 1"Ø | 4"-6" | 3/4" |
| 48"-72" | 1 1/4"Ø | 6"-8" | 1" |

SEE CITY PLATE NO. STO-12 AND STO-13 FOR RIPRAP PLACEMENT.

Cottage Grove
Where Pride and Prosperity Meet

STANDARD DETAILS

FLARED END SECTION AND
TRASH GAURD

COTTAGE GROVE, MINNESOTA

JANUARY 2026

PLATE NO.
STO-11

48_STO11.DWG

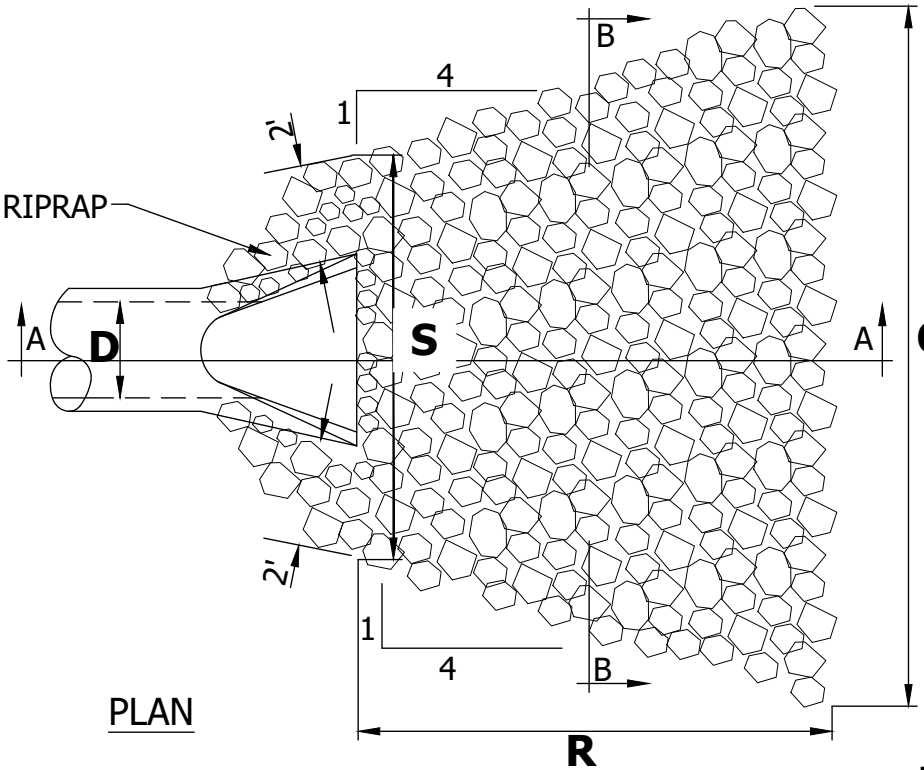


PLAN

**RIPRAP AREA SIZES**

| D | Q | R | S |
|---|---|---|---|
| 12" | 11' | 15' | 7' |
| 24" | 15' | 15' | 9' |
| 36" | 19' | 15' | 11' |
| 48" | 20' | 16' | 12' |
| 54" | 25' | 22' | 13' |

**RIPRAP REQUIREMENTS**

| D | CY | CLASS | DEPTH |
|---|---|---|---|
| 12" TO 24" | 15 TO 20 | CL.3 | 3' |
| 27" TO 33" | 20 TO 25 | CL.3 | 3' |
| 36" TO 48" | 25 TO 38 | CL.3 | 3' |
| 54" AND UP | 72 AND UP | CL.4 | 4' |

(ONE CUBIC YARD IS APPROX. 2,800 LBS.)

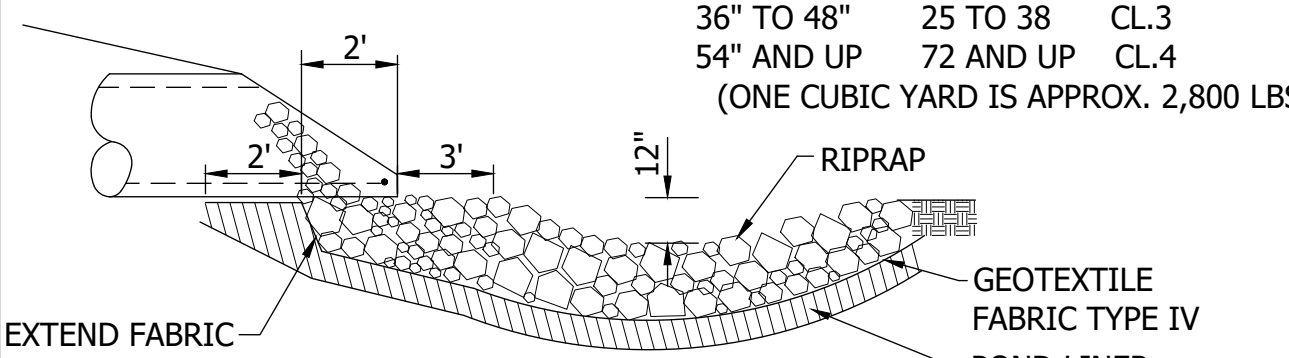


SECTION A-A

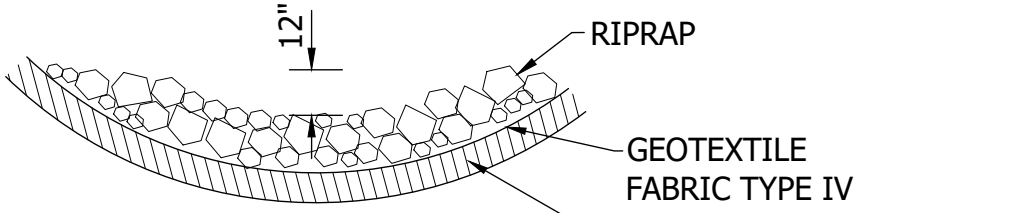


SECTION B-B

Cottage Grove
Where Pride and Prosperity Meet

STANDARD DETAILS

RIPRAP AT FLARED END SECTION

COTTAGE GROVE, MINNESOTA

JANUARY 2026

PLATE NO.
STO-12

48_STO12.DWG

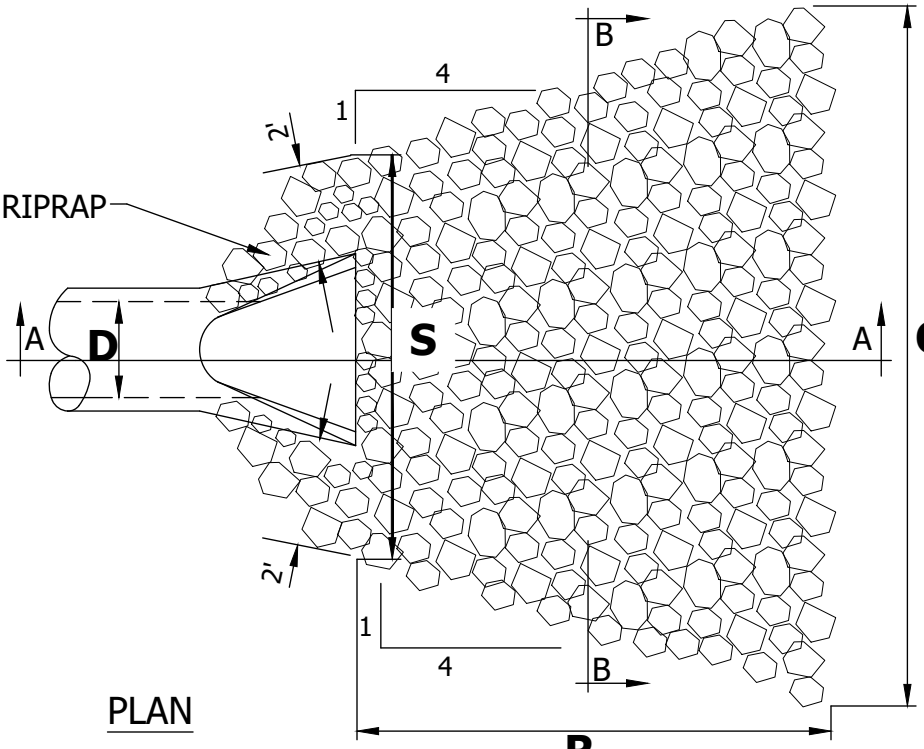


PLAN

**RIPRAP AREA SIZES**

| D | Q | R | S |
|---|---|---|---|
| 12" | 11' | 15' | 7' |
| 24" | 15' | 15' | 9' |
| 36" | 19' | 15' | 11' |
| 48" | 20' | 16' | 12' |
| 54" | 25' | 22' | 13' |

**RIPRAP REQUIREMENTS**

| D | CY | CLASS | DEPTH |
|---|---|---|---|
| 12" TO 24" | 15 TO 20 | CL.3 | 3' |
| 27" TO 33" | 20 TO 25 | CL.3 | 3' |
| 36" TO 48" | 25 TO 38 | CL.3 | 3' |
| 54" AND UP | 72 AND UP | CL.4 | 4' |

(ONE CUBIC YARD IS APPROX. 2,800 LBS.)

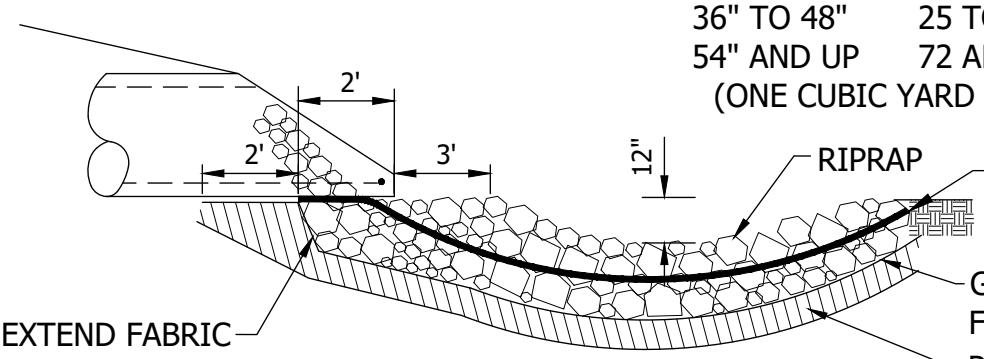


SECTION A-A

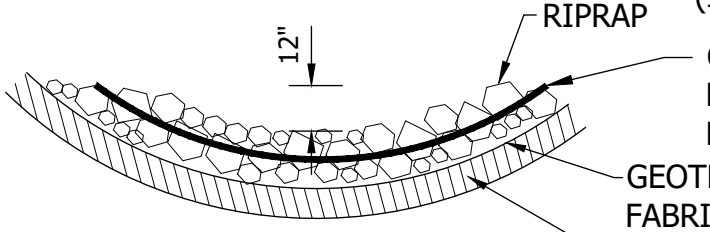


SECTION B-B

Cottage Grove
Where Pride and Prosperity Meet

STANDARD DETAILS

GROUTED RIPRAP AT FLARED END SECTION

COTTAGE GROVE, MINNESOTA

JANUARY 2026

PLATE NO.
STO-13

48_STO13.DWG

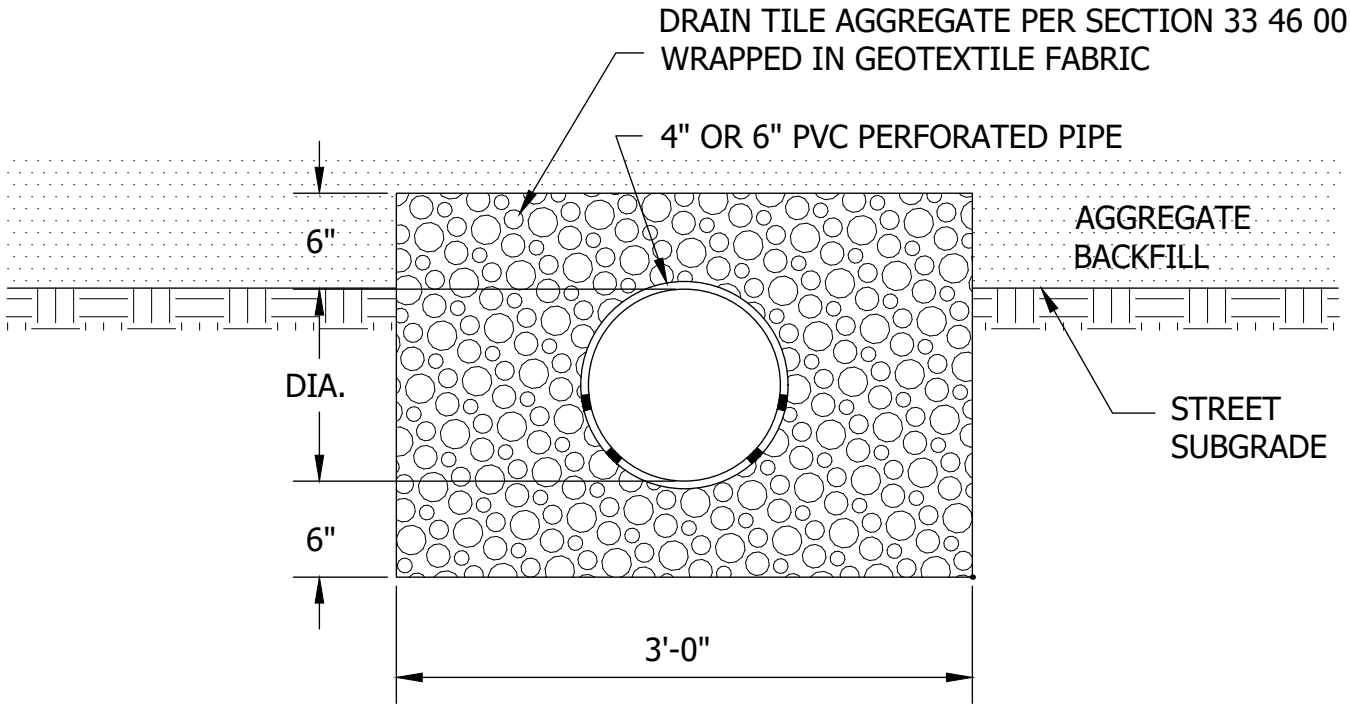


TRENCH DETAIL

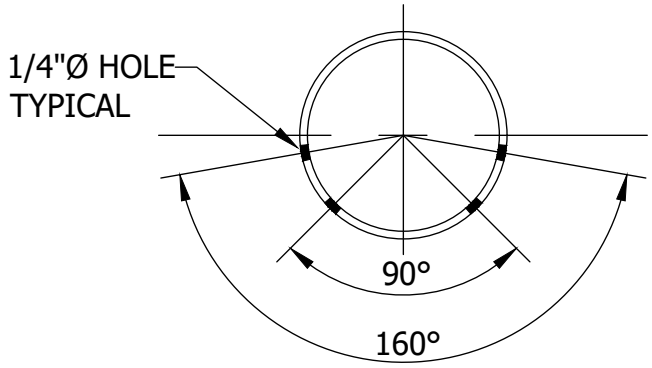


PIPE DETAIL

Cottage Grove
Where Pride and Prosperity Meet

STANDARD DETAILS

PVC PERFORATED PIPE

COTTAGE GROVE, MINNESOTA

JANUARY 2026

PLATE NO.
STO-14

48_STO14.DWG

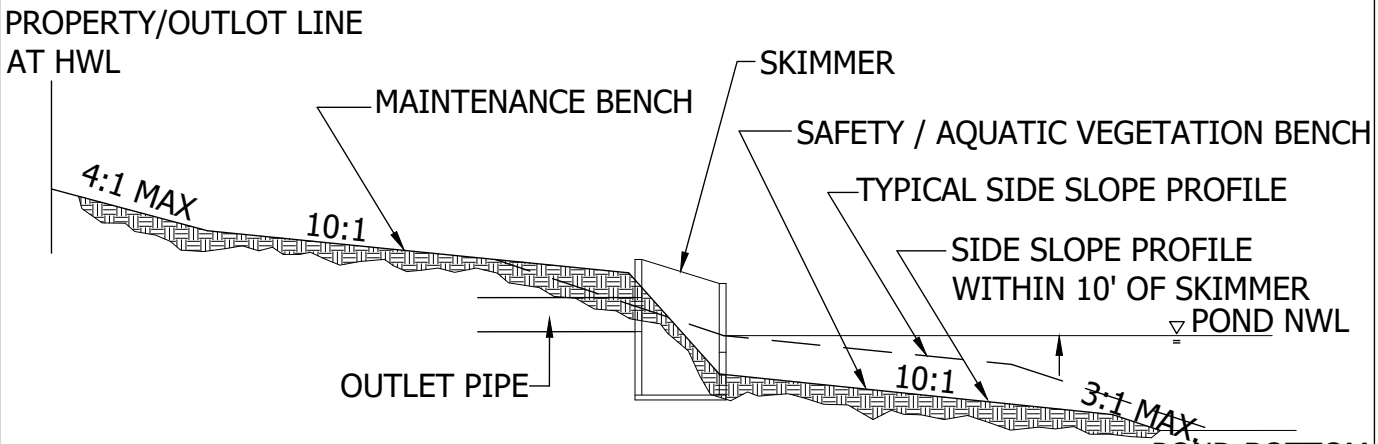


TYPICAL BENCH DETAIL WITHIN
10' OF SKIMMER OUTLET

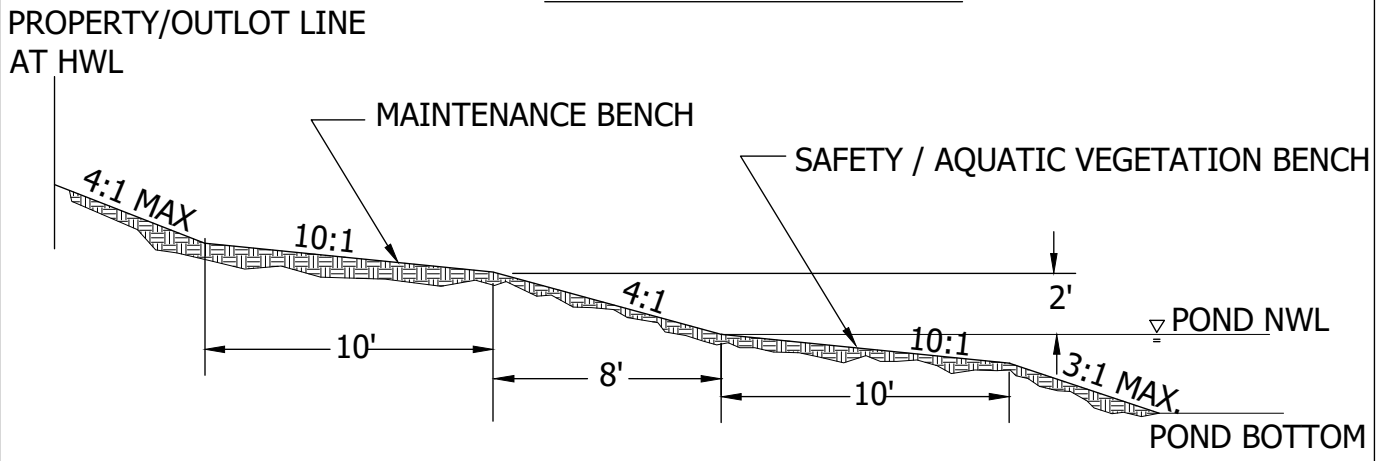


TYPICAL BENCH DETAIL

Cottage Grove
Where Pride and Prosperity Meet

STANDARD DETAILS

TYPICAL BENCH DETAIL

COTTAGE GROVE, MINNESOTA

JANUARY 2026

PLATE NO.
STO-15

48_STO15.DWG

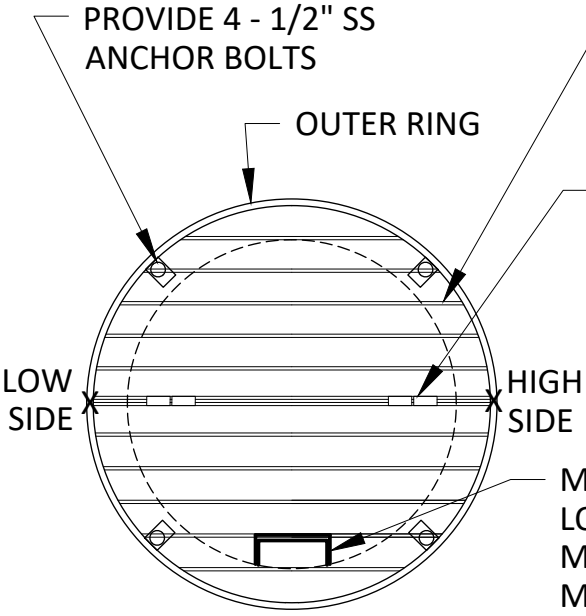


GRATE DETAIL

| MANHOLE DIAMETER | SKIMMER OPENING |
|---|---|
| 4' | 3'x1.5' |
| 5' | 4.5'x1.5' |
| 6' | 6'x1.5' |

| DIAMETER | * **D** (TOP OF STRUCTURE SLOPE) |
|---|---|
| 48" DIA | 9" OR 18" |
| >48" DIA | 12" OR 24" |

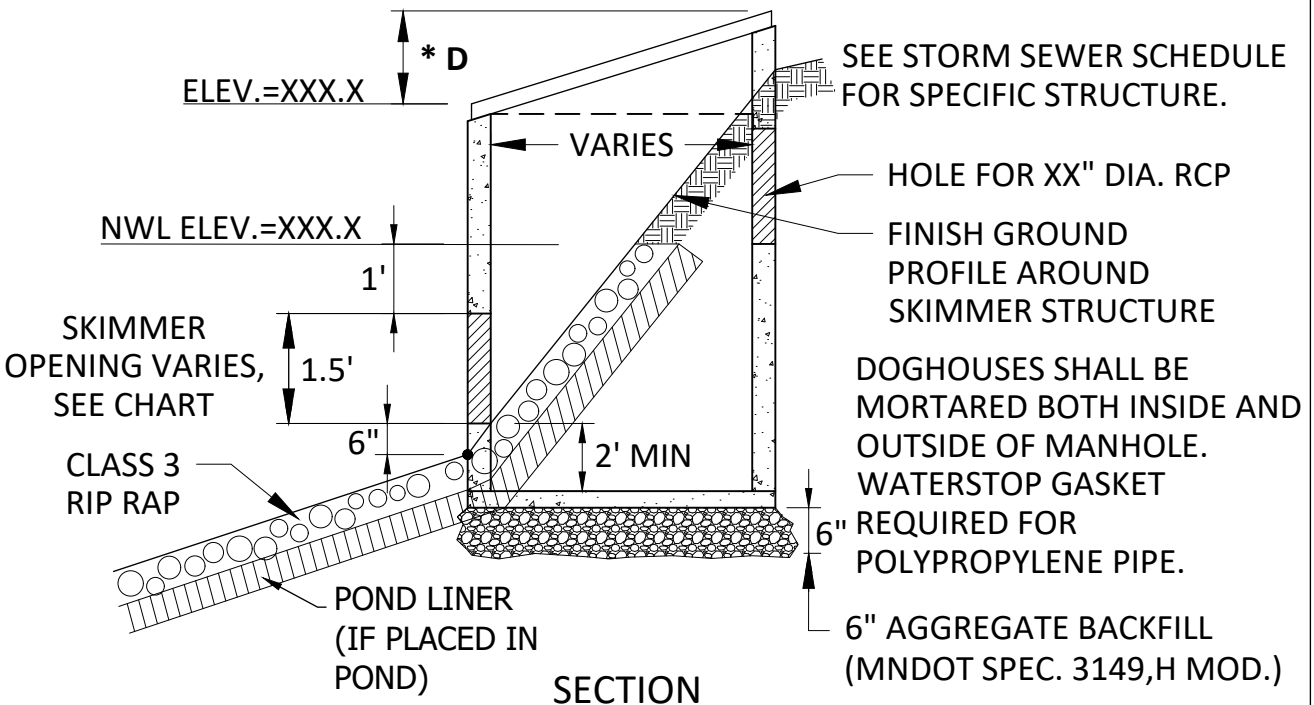


SECTION

Cottage Grove
Where Pride and Prosperity Meet

STANDARD DETAILS

STANDARD SKIMMER STRUCTURE

COTTAGE GROVE, MINNESOTA

JANUARY 2026

PLATE NO.
STO-16

48_STO16.DWG

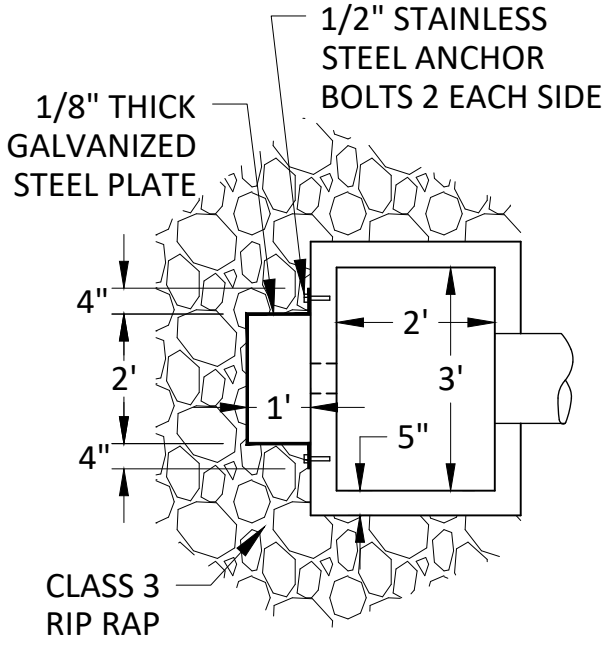


SKIMMER DETAIL

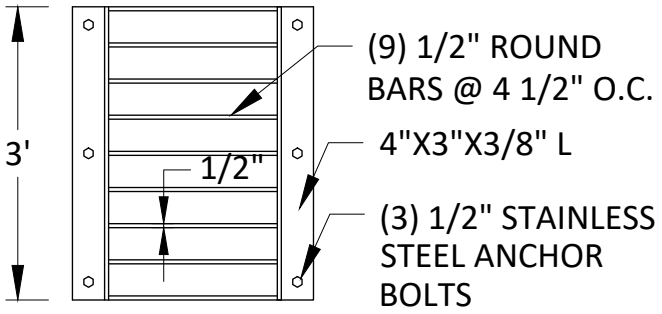


PLAN

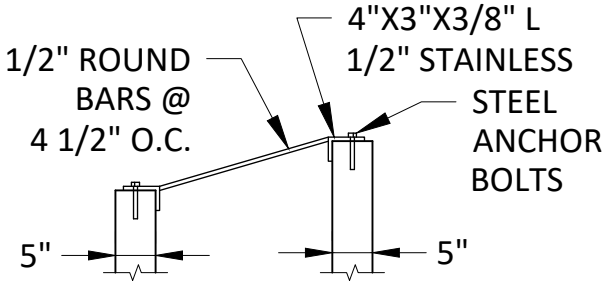


GRATE DETAIL

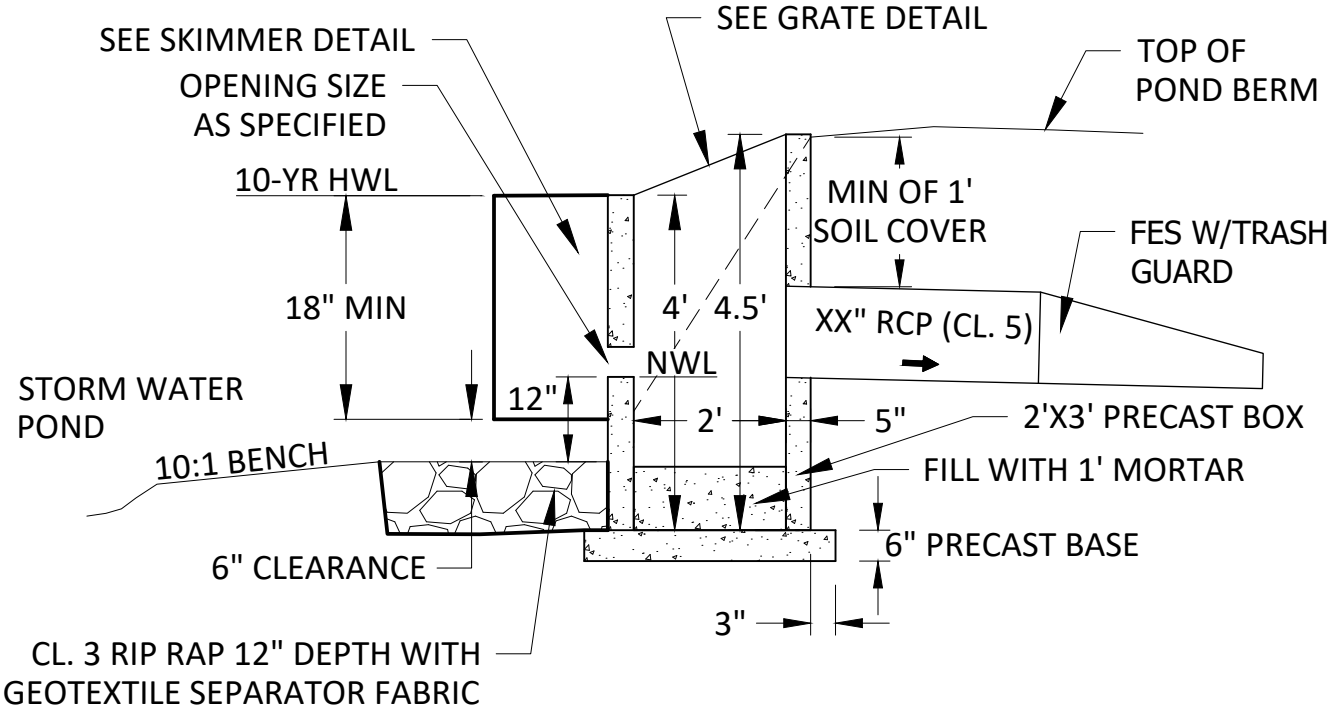


SECTION

Cottage Grove
Where Pride and Prosperity Meet

STANDARD DETAILS

POND OUTLET SKIMMER STRUCTURE

COTTAGE GROVE, MINNESOTA

JANUARY 2026

PLATE NO.
STO-17

48_STO17.DWG

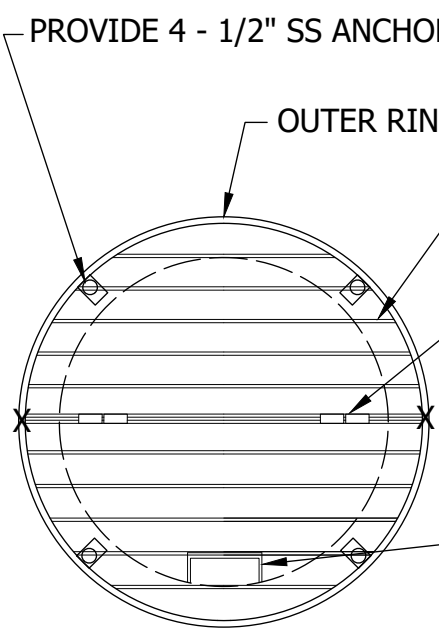


GRATE DETAIL

FLAT STEEL BATS @ 4" O.C.
NO PERPENDICULAR SUPPORT BARS ALLOWED FOR STRUCTURES LESS THAN 84" DIA.

HOT-DIPPED GALVANIZED GRATE IN 2 SECTIONS WITH HEAVY DUTY HINGES ABLE TO SUPPORT 250 LBS/SF AND BE ABLE TO REMOVE ONE SECTION FOR ACCESS TO STEPS BY REMOVING NUTS FROM TWO ANCHOR BOLTS. SUBMIT SHOP DRAWINGS TO ENGINEER FOR REVIEW PRIOR TO FABRICATION.

MANHOLE STEPS SHALL BE PLACED SO THAT LOCATION IS PERPENDICULAR TO THE BARS. MANHOLE STEPS, NEENAH R1981J OR EQUAL, 16" ON CENTER. ALUMINUM STEPS APPROVED.

| DIAMETER | TOP OF STRUCTURE SLOPE (D) |
|---|---|
| 48" DIA. | 9" OR 18" |
| >48" DIA. | 12" OR 24" |

SEE STORM SEWER SCHEDULE FOR SPECIFIC STRUCTURE.

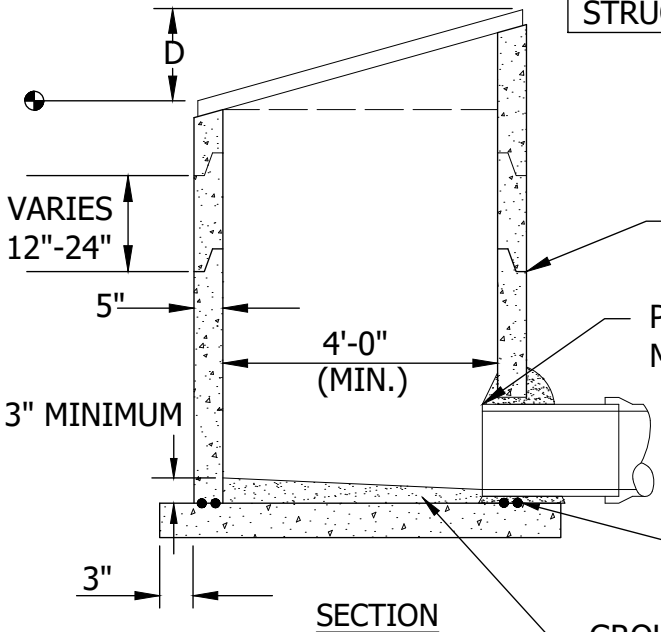


SECTION

NO BLOCK STRUCTURES ARE ALLOWED.

ALL JOINTS IN MANHOLE TO HAVE RUBBER GASKETS.

PIPE SHALL BE CUT TO BE 2"-4" INSIDE MANHOLE WALL.

DOGHOUSES SHALL BE MORTARED BOTH INSIDE AND OUTSIDE OF MANHOLE. WATERSTOP GASKET REQUIRED FOR POLYPROPYLENE PIPE.

PLACE 2 BEADS OF RAMNEK OR EQUAL, BETWEEN BOTTOM SLAB AND BARREL SECTION.

GROUTED INVERT

Cottage Grove
Where Pride and Prosperity Meet

# STANDARD DETAILS

STANDARD OVERFLOW STRUCTURE

COTTAGE GROVE, MINNESOTA

JANUARY 2026

PLATE NO.
STO-18

48_STO18.DWG

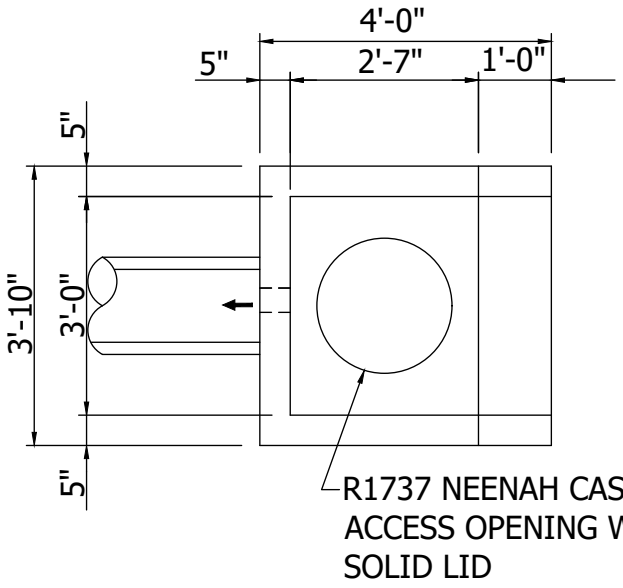


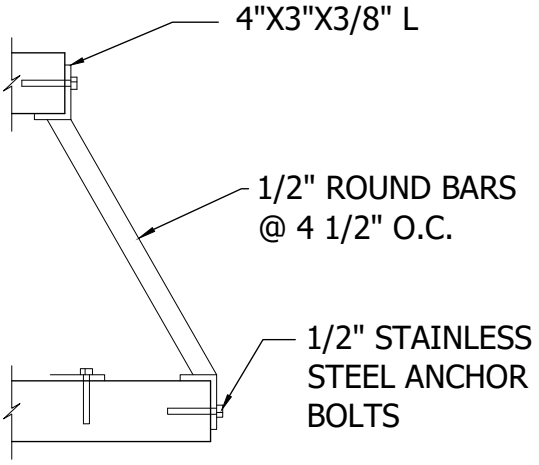


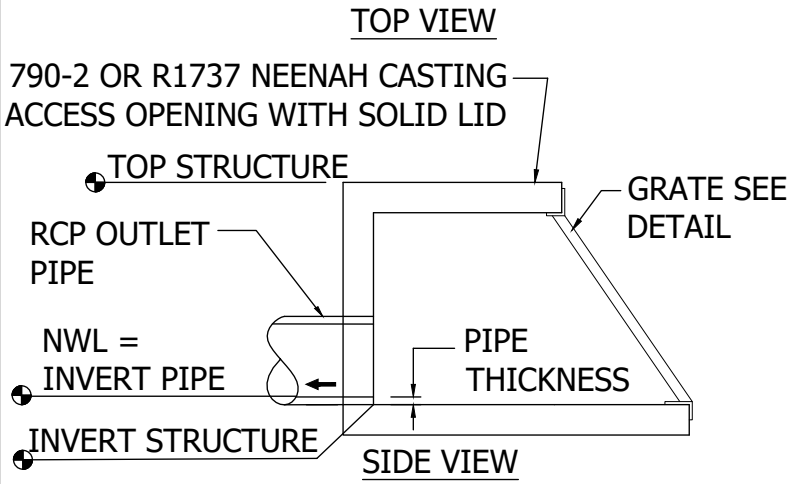


OUTLET STRUCTURE NOTES:

1. OUTLET STRUCTURE SHALL BE REINFORCED PRECAST CONCRETE.
2. GRATING SHALL BE HOT DIPPED GALVANIZED AFTER FABRICATION.
3. ALL ANCHOR BOLTS SHALL BE 1/2"ø S.S. EXP. ANCHORS W/ 4" MIN. EMBEDMENT.
4. MAXIMUM SIZE OULET PIPE TO BE 15".

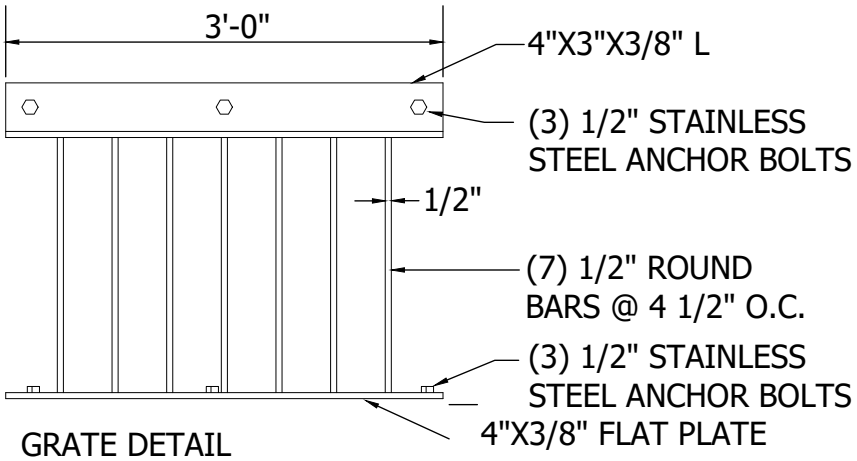


GRATE DETAIL

Cottage Grove
Where Pride and Prosperity Meet

# STANDARD DETAILS

OUTLET STRUCTURE

COTTAGE GROVE, MINNESOTA

JANUARY 2026

PLATE NO.
STO-19

48_STO19.DWG

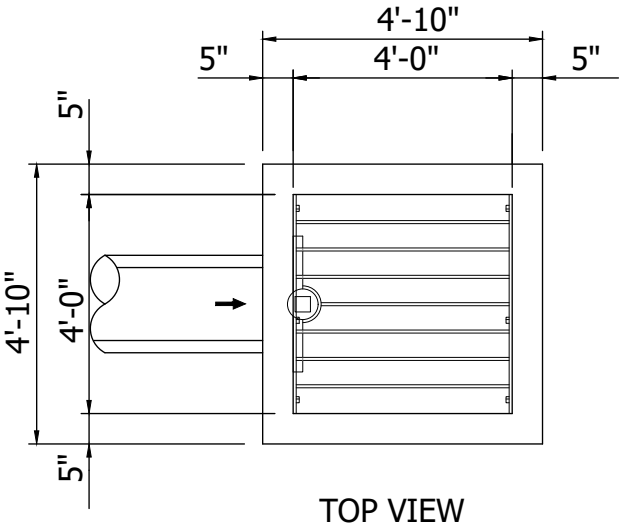


TOP VIEW

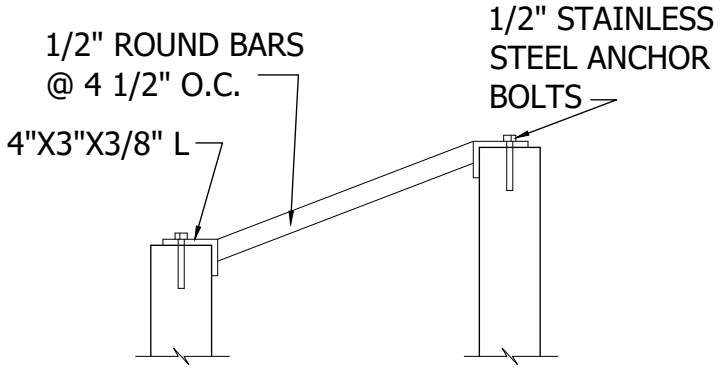


MANHOLE STEPS, NEENAH R1981J OR EQUAL, 16" ON CENTER. ALUMINUM STEPS APPROVED

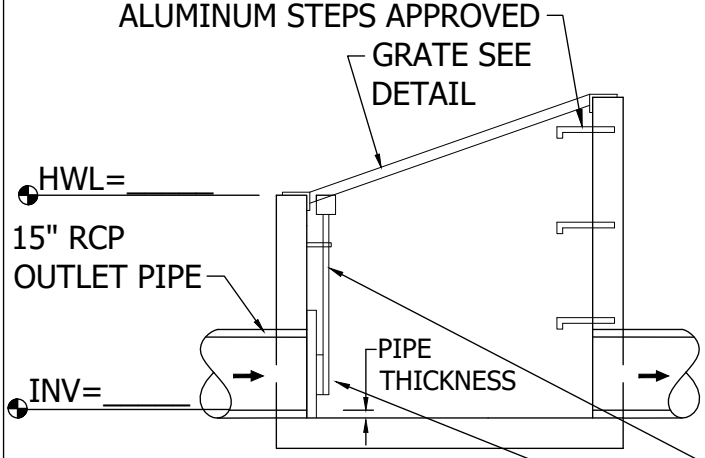


SIDE VIEW

OUTLET STRUCTURE NOTES:

1. OUTLET STRUCTURE SHALL BE REINFORCED PRECAST CONCRETE.
2. GRATING SHALL BE HOT DIPPED GALVANIZED AFTER FABRICATION.
3. ALL ANCHOR BOLTS SHALL BE 1/2"ø S.S. EXP. ANCHORS W/ 4" MIN. EMBEDMENT.
4. MAXIMUM SIZE OUTLET PIPE TO BE 15".
5. FOR STRUCTURES CAST IN 2 SECTIONS, MASTIC SHALL BE USED TO PROVIDE A WATERTIGHT SEAL AND SECTIONS SHALL BE SECURED USING WELD PLATES.
6. GRATE MAY BE VARIED WITH APPROVAL FROM ENGINEER
7. ENGINEER TO REVIEW SHOP DRAWINGS BEFORE CONSTRUCTION

SLUICE GATE OPERATING NUT & ROD SECURE TO WALL W/MOUNTING BRACKET

SLUICE GATE W/ SPECIFIED ORIFICE
- 12" OPENING N.R. STEM
- 2" SQUARE OPERATING NUT
- 4 1/2" ORIFICE AS SPECIFIED

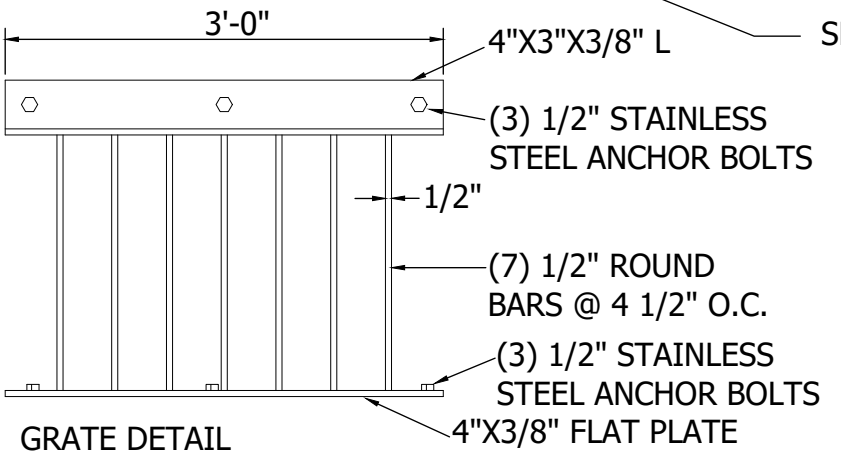


GRATE DETAIL

Cottage Grove
Where Pride and Prosperity Meet

# STANDARD DETAILS

OVERFLOW STRUCTURE WITH SLUICE GATE WITH ORIFICE

COTTAGE GROVE, MINNESOTA

JANUARY 2026

PLATE NO.
STO-20

48_STO20.DWG

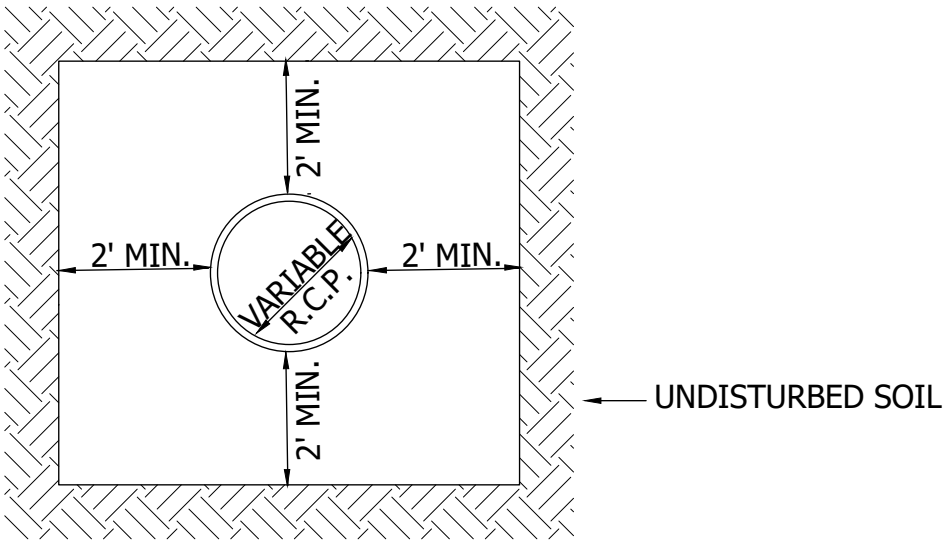


SECTION A-A

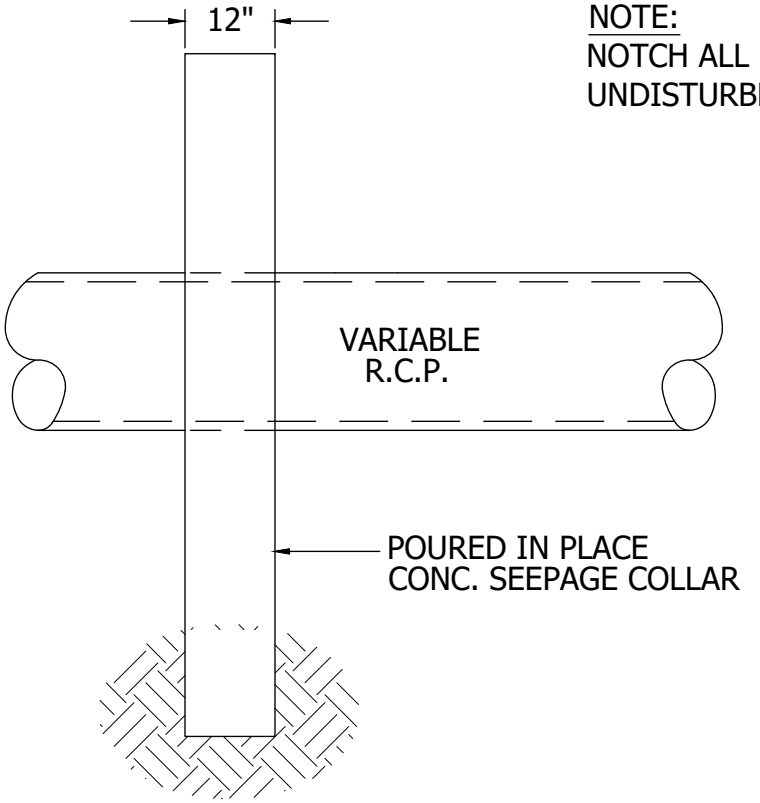


NOTE:
NOTCH ALL SIDES INTO
UNDISTURBED SOIL

Cottage Grove
Where Pride and Prosperity Meet

STANDARD DETAILS

SEEPAGE COLLAR

COTTAGE GROVE, MINNESOTA

JANUARY 2026

PLATE NO.
STO-21

48_STO21.DWG

NOTE:
SERVICE CONNECTIONS TO BE
AT 2 O'CLOCK OR 10 O'CLOCK

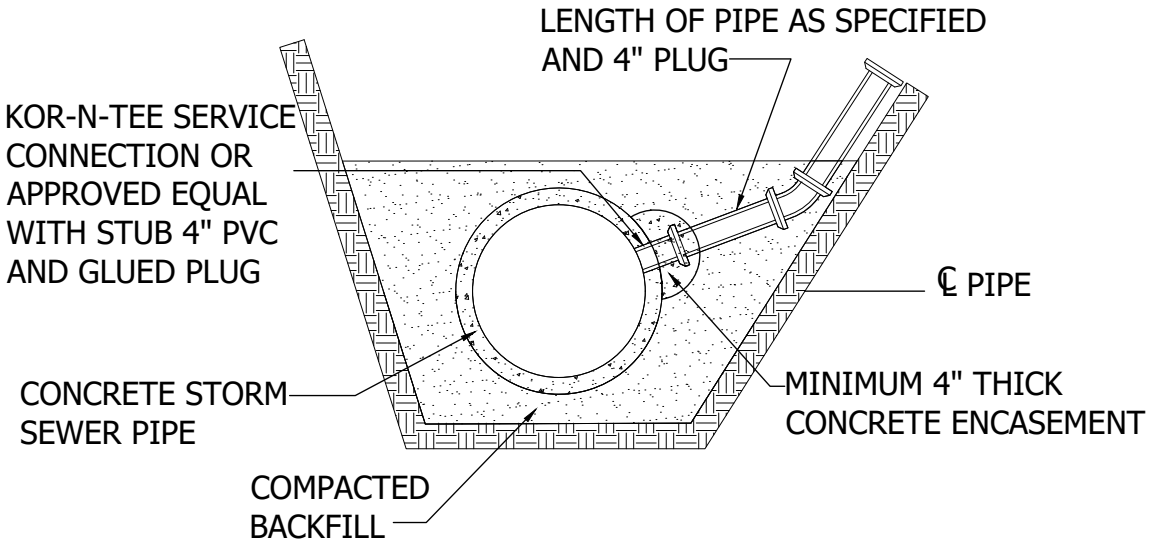


Cottage Grove
Where Pride and Prosperity Meet

STANDARD DETAILS

STORM SEWER SERVICE
CONNECTION TO RCP

COTTAGE GROVE, MINNESOTA

JANUARY 2026

PLATE NO.
STO-22

48_STO22.DWG

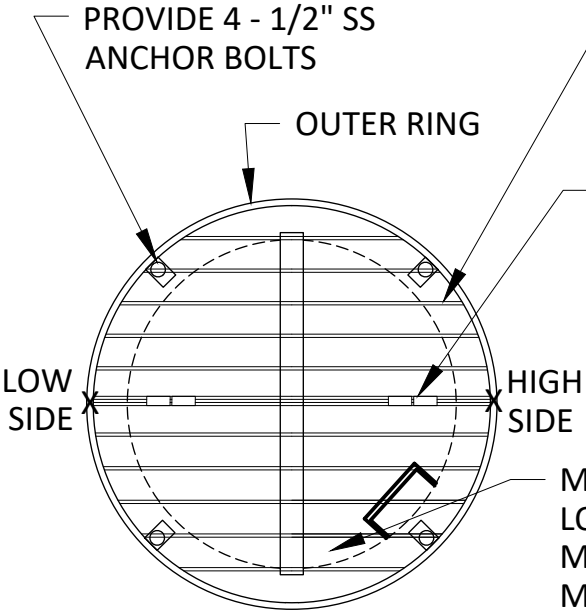


GRATE DETAIL

SEE STORM SEWER SCHEDULE FOR SPECIFIC WEIR WALL. SEE STORM SEWER SHEETS FOR SPECIFIC STRUCTURE ELEVATIONS.

| MANHOLE DIAMETER | SKIMMER OPENING |
|---|---|
| 5' | 4.5'x1.5' |
| 6' | 6'x1.5' |

| DIAMETER | * **D** (TOP OF STRUCTURE SLOPE) |
|---|---|
| >48" DIA | 12" OR 24" |

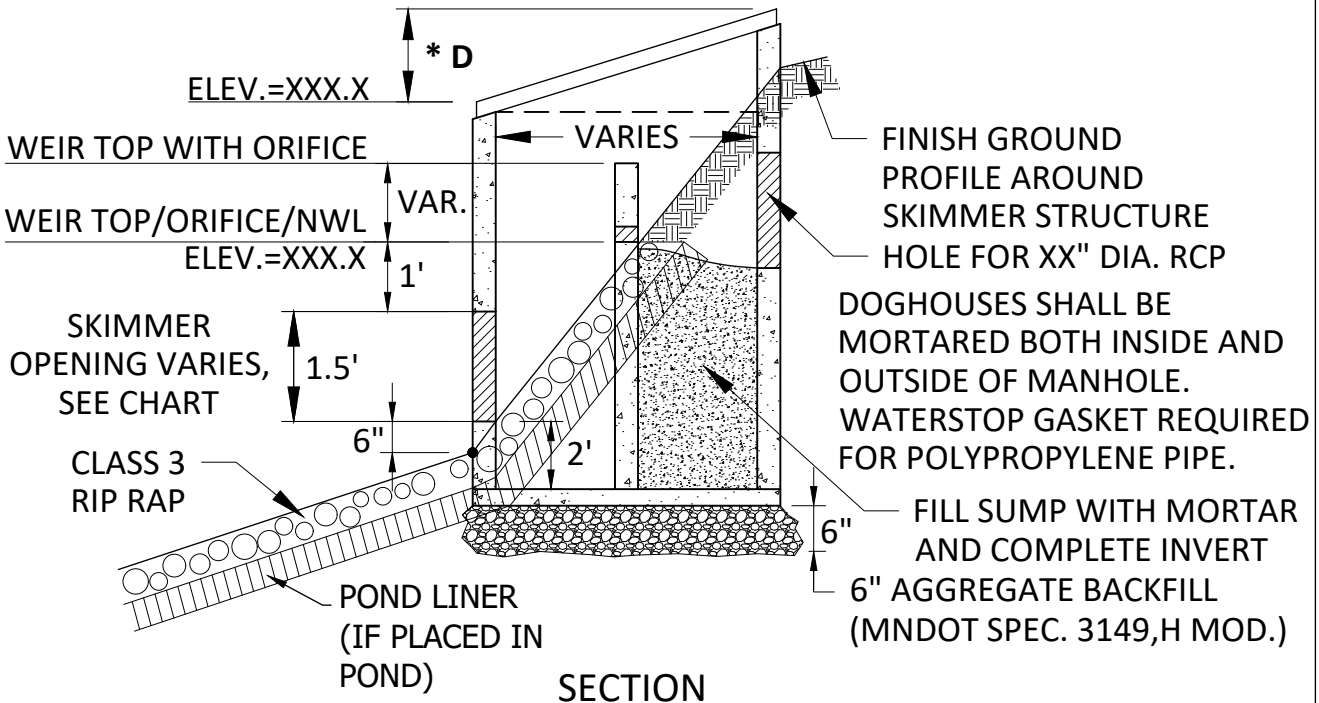


SECTION

Cottage Grove
Where Pride and Prosperity Meet

STANDARD DETAILS

STANDARD SKIMMER STRUCTURE WITH WEIR WALL

COTTAGE GROVE, MINNESOTA

JANUARY 2026

PLATE NO.
STO-23

48_STO23.DWG

## RESIDENTIAL (28' F-F)

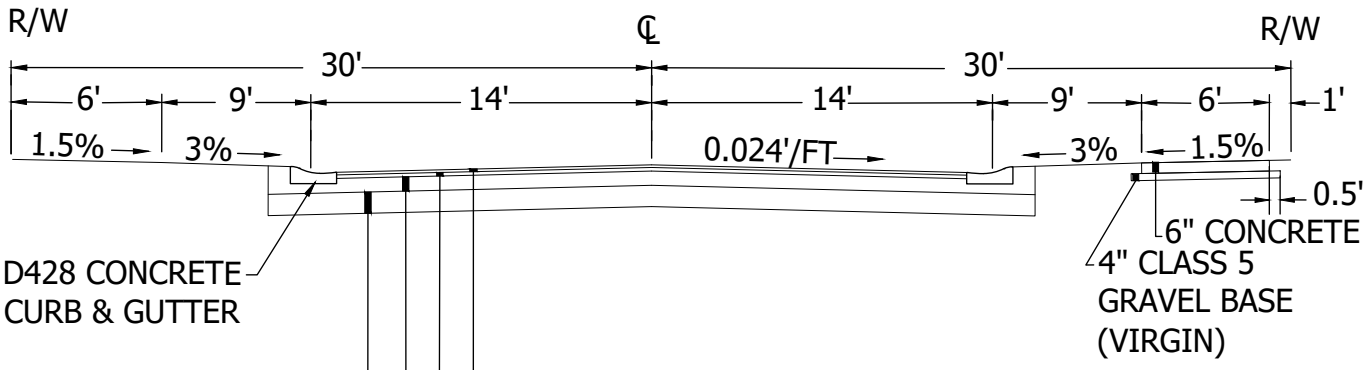


1.5" TYPE SP 9.5 WEARING COURSE MIXTURE (3, C) [SPWEA330C]

2.0" TYPE SP 9.5 WEARING COURSE MIXTURE (3, C) [SPWEA330C]

8" CLASS 5 AGGREGATE BASE (VIRGIN)

SUBGRADE EXCAVATION AND AGGREGATE BACKFILL AS DIRECTED BY THE ENGINEER (IF NECESSARY, 12"MIN. THICKNESS REQUIRED)

NOTES:

1. TOP OF D428 CURB IS 0.03 BELOW DESIGN CL GRADE.
2. R.O.W. TO BE 0.30' ABOVE DESIGN CL ELEVATION.

Cottage Grove
Where Pride and Prosperity Meet

STANDARD DETAILS

TYPICAL PUBLIC STREET SECTION
RESIDENTIAL (28' F-F)

COTTAGE GROVE, MINNESOTA

JANUARY 2026

PLATE NO.
STR-1

48_STR1.DWG

## RESIDENTIAL (32' F-F)

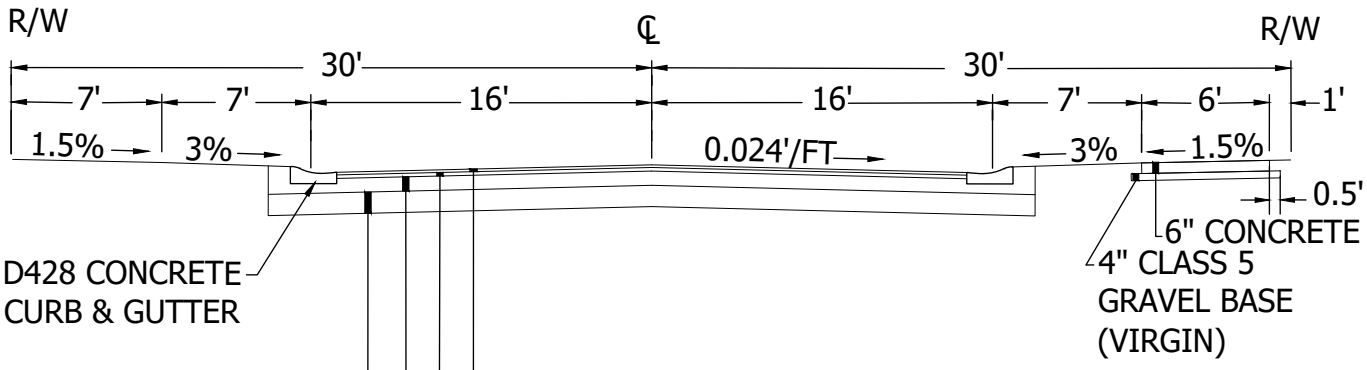


1.5" TYPE SP 9.5 WEARING COURSE MIXTURE (3, C) [SPWEA330C]

2.0" TYPE SP 9.5 WEARING COURSE MIXTURE (3, C) [SPWEA330C]

8" CLASS 5 AGGREGATE BASE (VIRGIN)

SUBGRADE EXCAVATION AND AGGREGATE BACKFILL AS DIRECTED BY THE ENGINEER (IF NECESSARY, 12"MIN. THICKNESS REQUIRED)

NOTES:

1. TOP OF D428 CURB IS 0.08 BELOW DESIGN CL GRADE.
2. R.O.W. TO BE 0.19' ABOVE DESIGN CL ELEVATION.

Cottage Grove
Where Pride and Prosperity Meet

STANDARD DETAILS

TYPICAL PUBLIC STREET SECTION
RESIDENTIAL (32' F-F)

COTTAGE GROVE, MINNESOTA

JANUARY 2026

PLATE NO.
STR-2

48_STR2.DWG

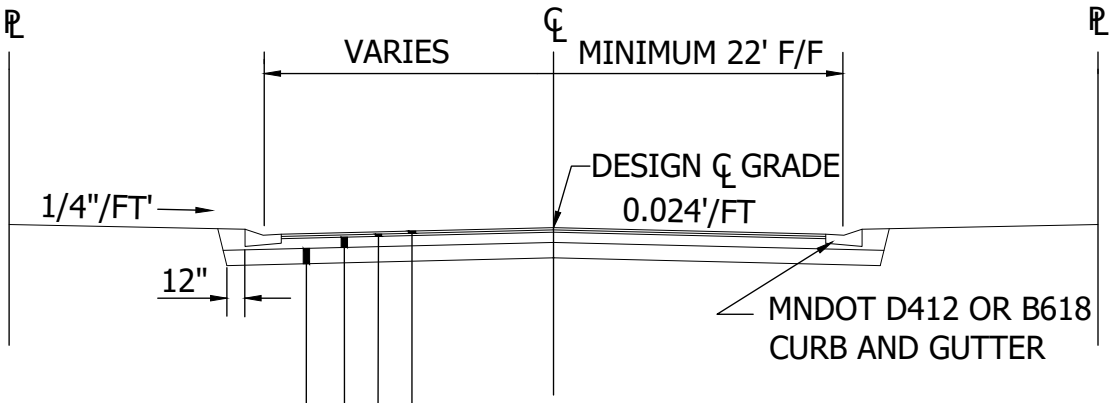


1.5" TYPE SP 9.5 WEARING COURSE MIXTURE (3, C)
[SPWEA330C]

2.0" TYPE SP 9.5 WEARING COURSE MIXTURE (3, C)
[SPWEA330C]

8" CLASS 5 GRAVEL BASE (VIRGIN)

SUBGRADE EXCAVATION AND AGGREGATE BACKFILL
AS DIRECTED BY THE ENGINEER.
(IF NECESSARY, 12" MIN. THICKNESS REQUIRED)

Cottage Grove
Where Pride and Prosperity Meet

# STANDARD DETAILS

TYPICAL PRIVATE STREET
SECTION URBAN

COTTAGE GROVE, MINNESOTA

JANUARY 2026

PLATE NO.
STR-3

48_STR3.DWG

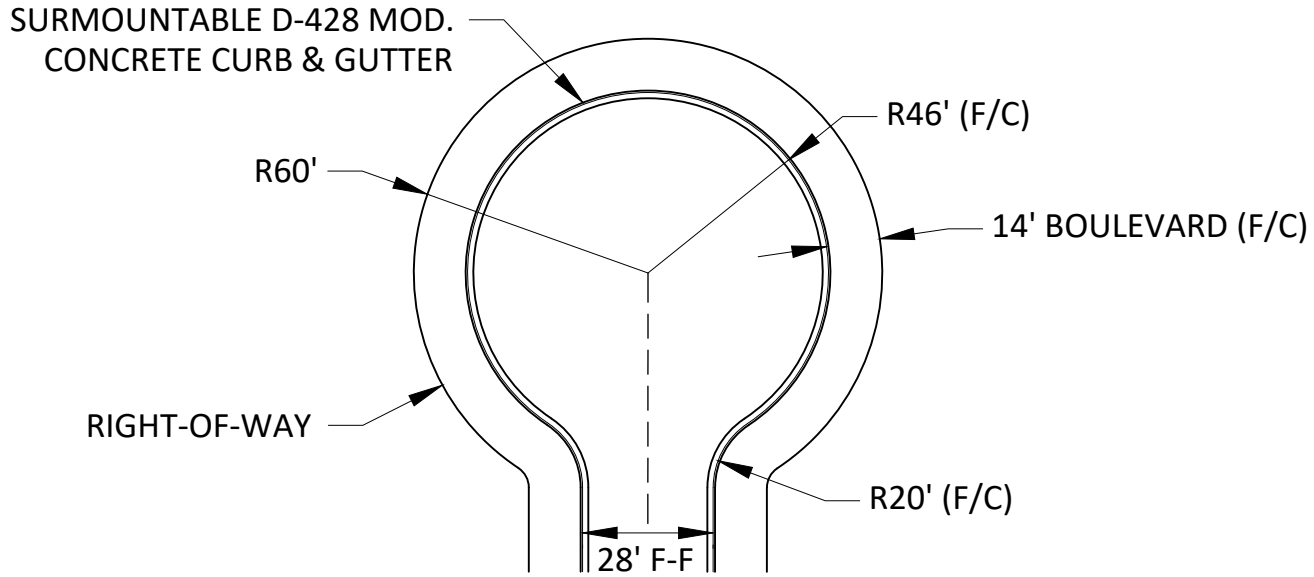


STANDARD CUL-DE-SAC

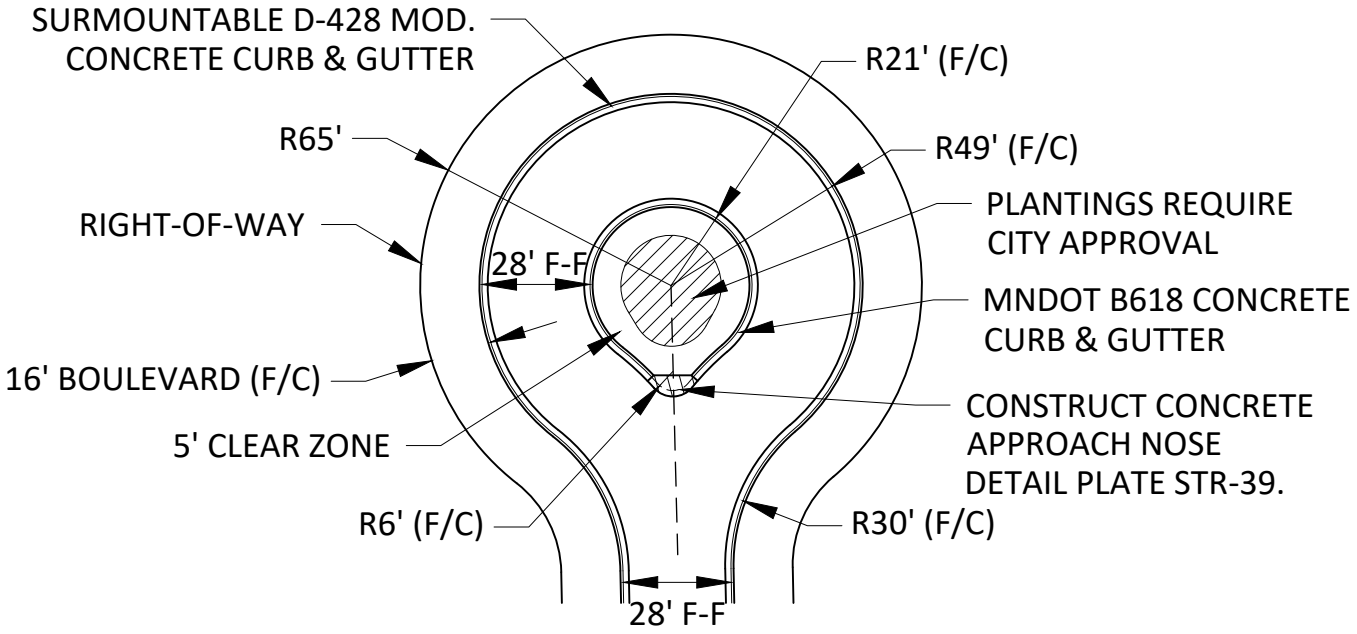


NOTE:
CURB AND GUTTER TO BE B618 (GUTTER OUT).

ISLAND CUL-DE-SAC

Cottage Grove
Where Pride and Prosperity Meet

STANDARD DETAILS

TYPICAL CUL-DE-SAC SECTIONS
RESIDENTIAL (28' F-F)
COTTAGE GROVE, MINNESOTA

JANUARY 2026

PLATE NO.
STR-4

48_STR4.DWG

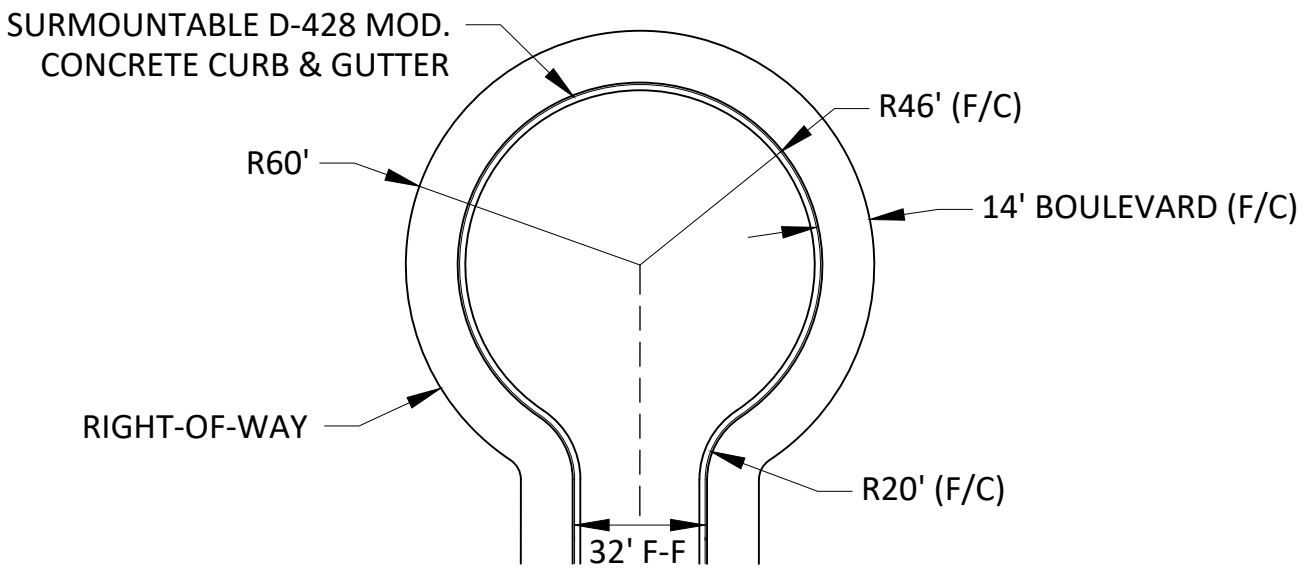


STANDARD CUL-DE-SAC

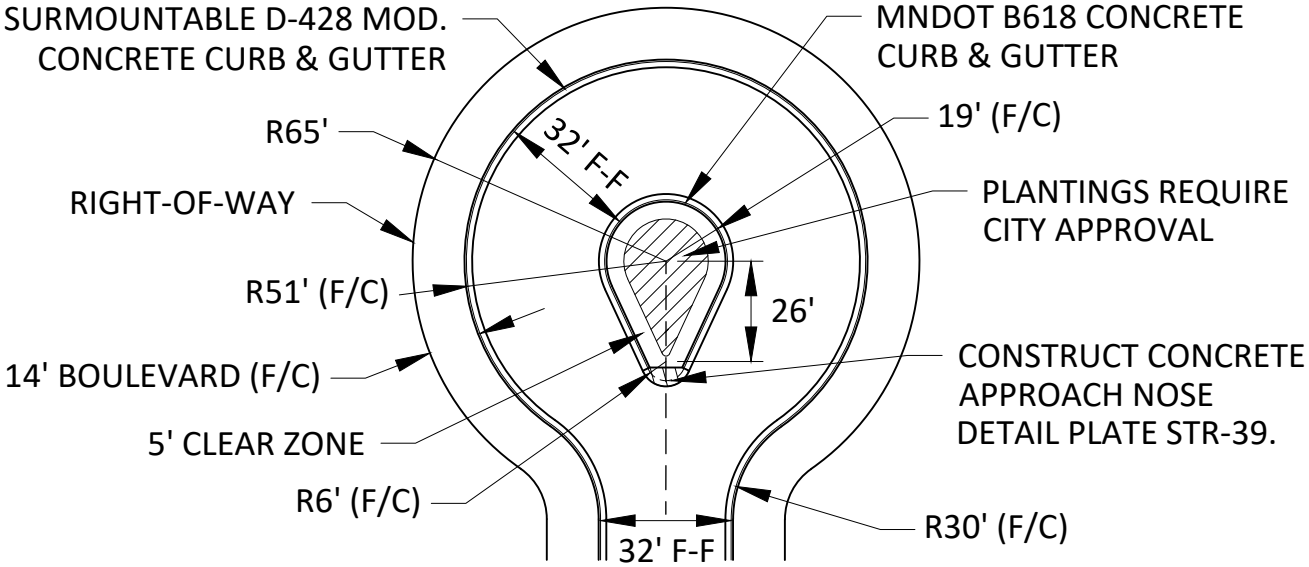


NOTE:
CURB AND GUTTER TO BE B618 (GUTTER OUT).

ISLAND CUL-DE-SAC

Cottage Grove
Where Pride and Prosperity Meet

STANDARD DETAILS

TYPICAL CUL-DE-SAC SECTIONS
RESIDENTIAL (32' F-F)
COTTAGE GROVE, MINNESOTA

JANUARY 2026

PLATE NO.
STR-5

48_STR5.DWG

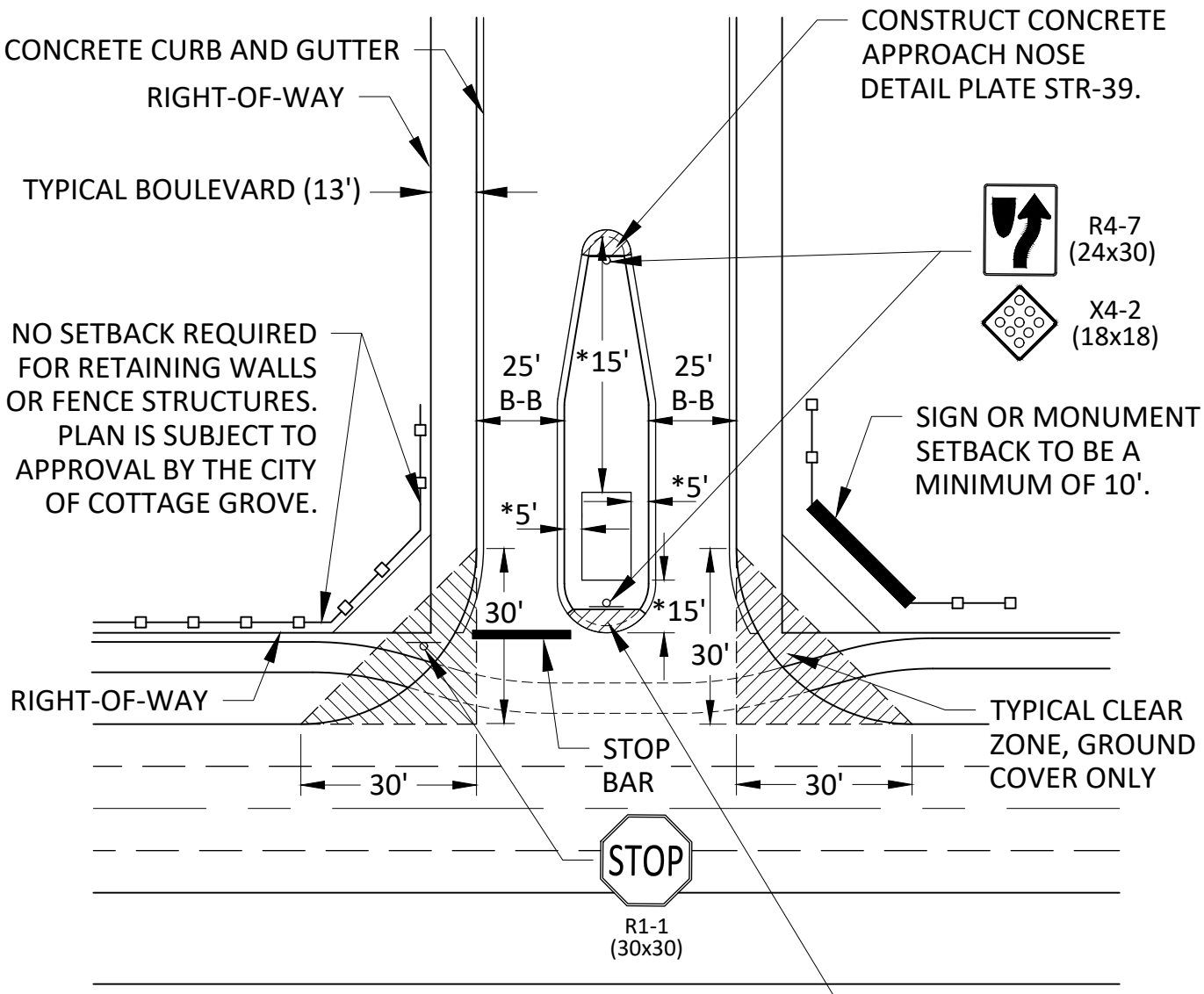


* DISTANCES INDICATED ARE MINIMUM HORIZONTAL DISTANCE FROM ANY ISLAND STRUCTURE (MONUMENT) TO BACK OF CURB AND GUTTER

Cottage Grove
Where Pride and Prosperity Meet

STANDARD DETAILS

ENTRANCE DETAIL

COTTAGE GROVE, MINNESOTA

JANUARY 2026

PLATE NO.
STR-6

48_STR6.DWG

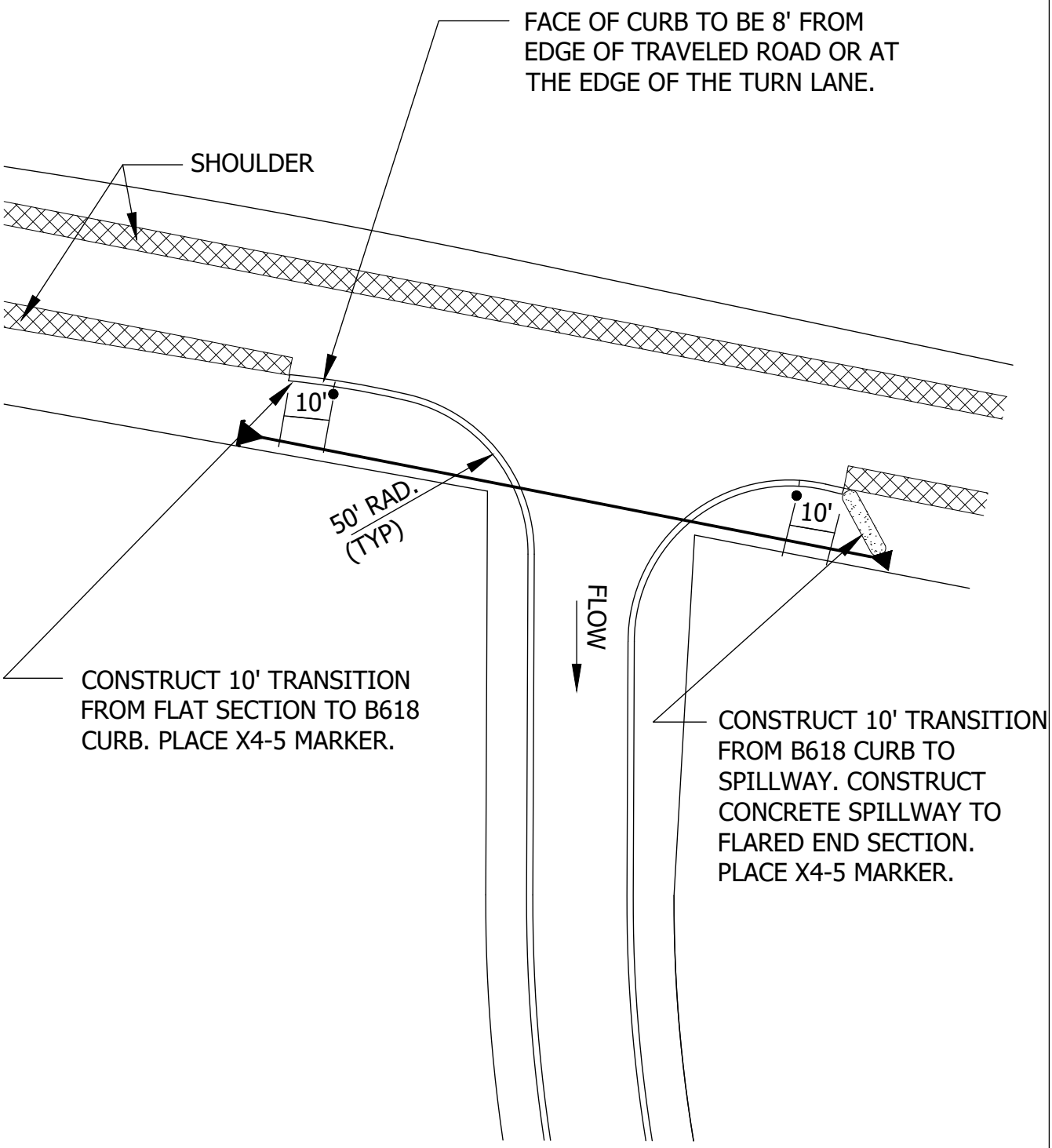


Cottage Grove

Where Pride and Prosperity Meet

# STANDARD DETAILS

RURAL ROADWAY STREET ENTRANCE

COTTAGE GROVE, MINNESOTA

JANUARY 2026

PLATE NO.

STR-7

48_STR7.DWG

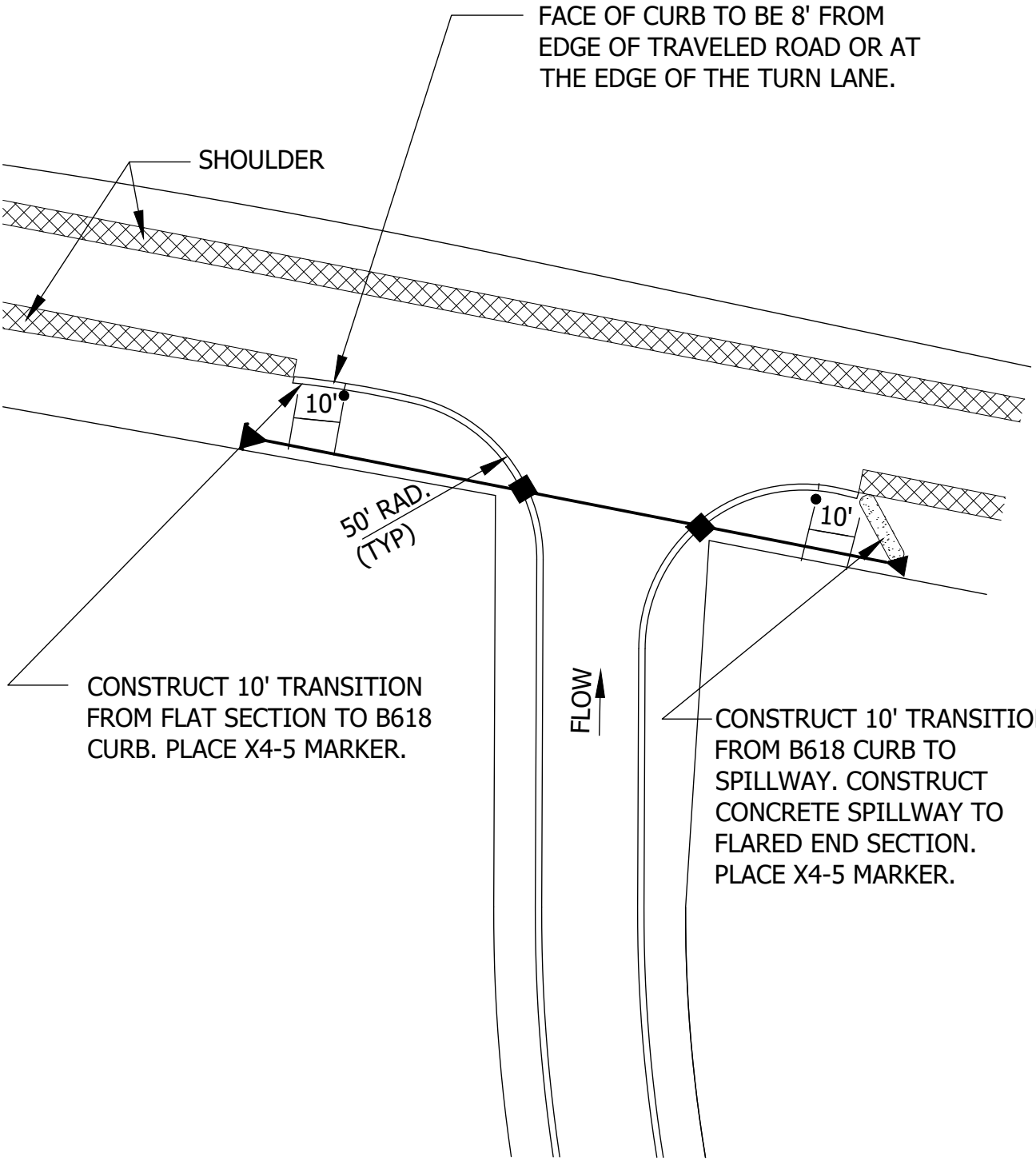


NOTE:
IF CATCHBASINS ARE NOT REQUIRED,
THEN CONCRETE SPILLWAY WILL BE REQUIRED

Cottage Grove
Where Pride and Prosperity Meet

# STANDARD DETAILS

RURAL ROADWAY STREET
ENTRANCE WITH CATCHBASINS

COTTAGE GROVE, MINNESOTA

JANUARY 2026

PLATE NO.
STR-8

48_STR8.DWG

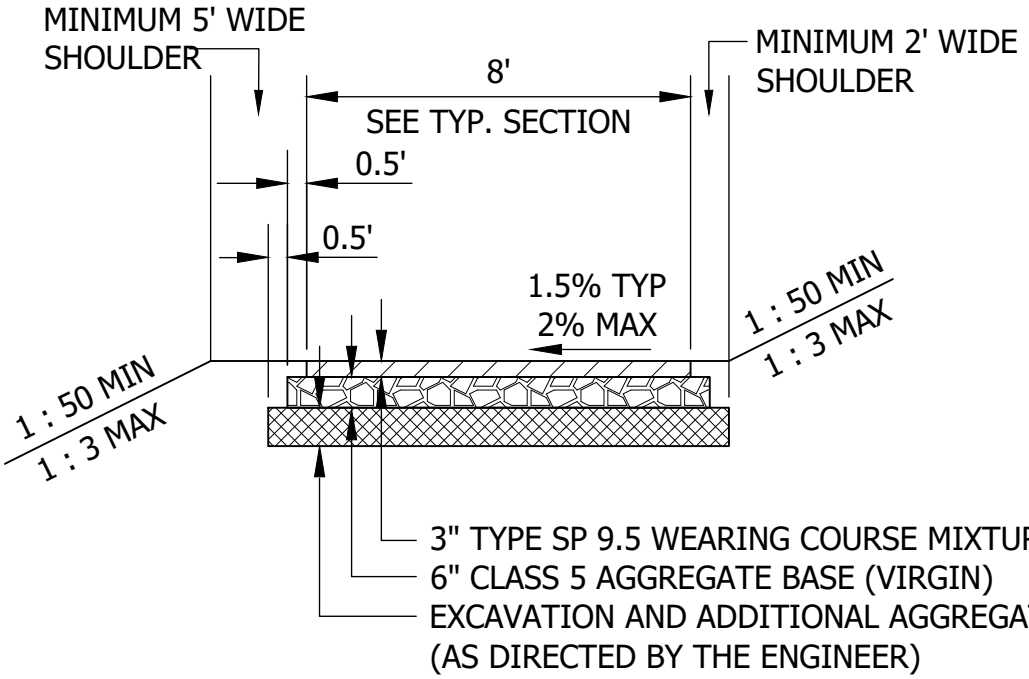


## BITUMINOUS TRAIL

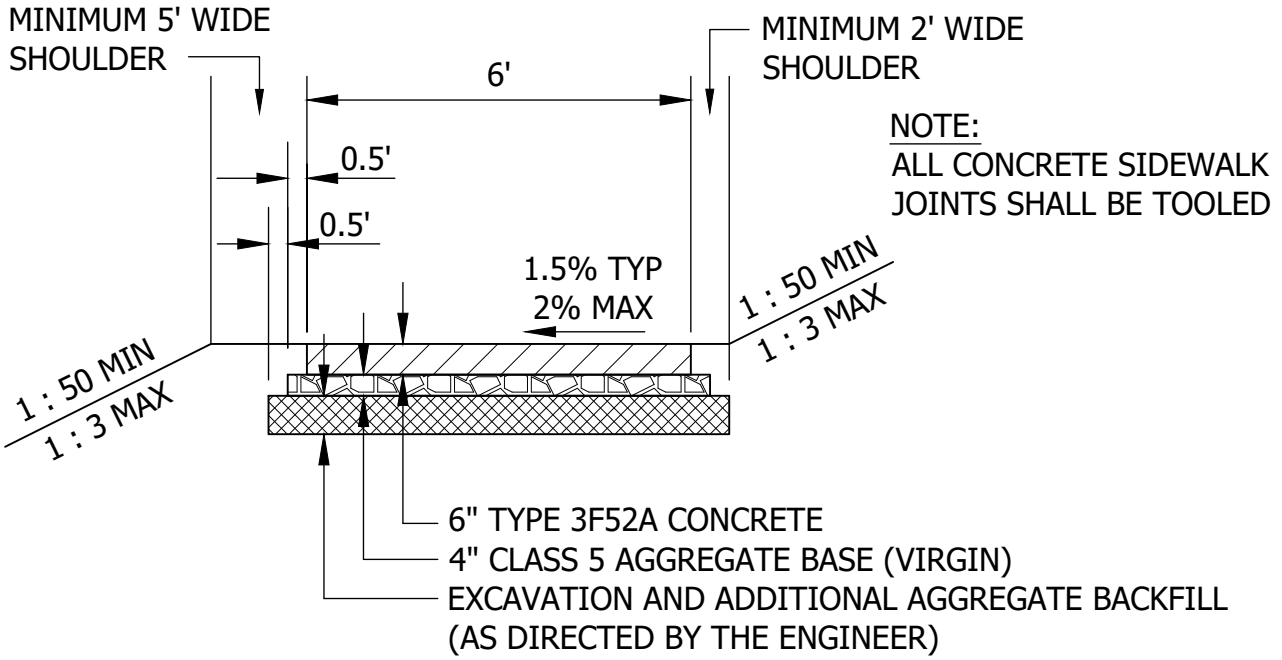


## CONCRETE SIDEWALK

Cottage Grove
Where Pride and Prosperity Meet

# STANDARD DETAILS

TYPICAL BITUMINOUS TRAIL AND
CONCRETE SIDEWALK SECTIONS

COTTAGE GROVE, MINNESOTA

JANUARY 2026

PLATE NO.
STR-9

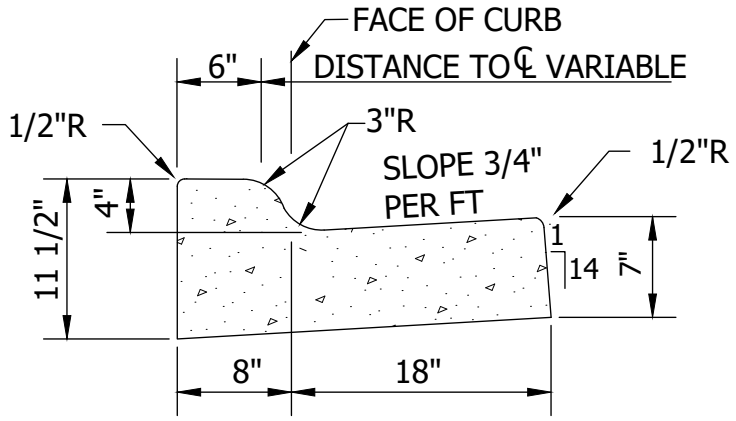


MNDOT B418 MOD

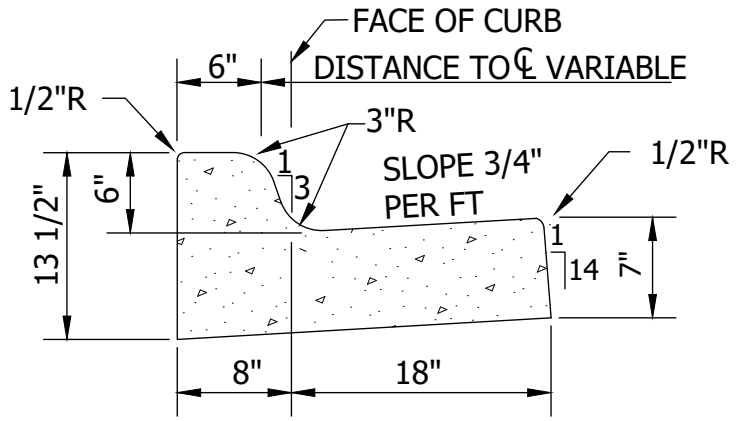


MNDOT B618 MOD

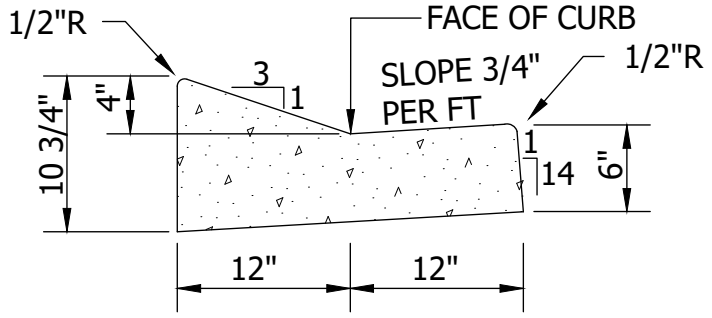


SURMOUNTABLE
D-412 MOD

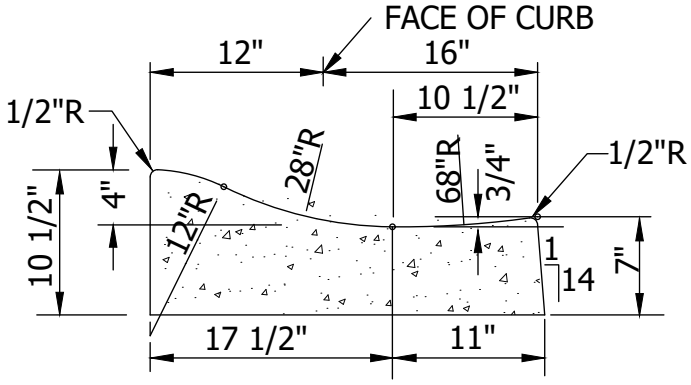


SURMOUNTABLE
D-428 MOD

Cottage Grove
Where Pride and Prosperity Meet

STANDARD DETAILS

CURB AND GUTTER

COTTAGE GROVE, MINNESOTA

JANUARY 2026

PLATE NO.
STR-10

48_STR10.DWG

NOTES:

1. ALL NEW AND EXISTING WATER AND SEWER SERVICE LOCATIONS SHALL BE MARKED IN CURB AS SHOWN. STAMPING OF SERVICE LOCATIONS SHALL BE CONSIDERED INCIDENTAL TO THE PRICE OF CURB.
2. CONCRETE CURB PANELS WITH W'S AND S'S NOT PLACED BY SPECIFIED STAMP WILL NOT BE ACCEPTED.

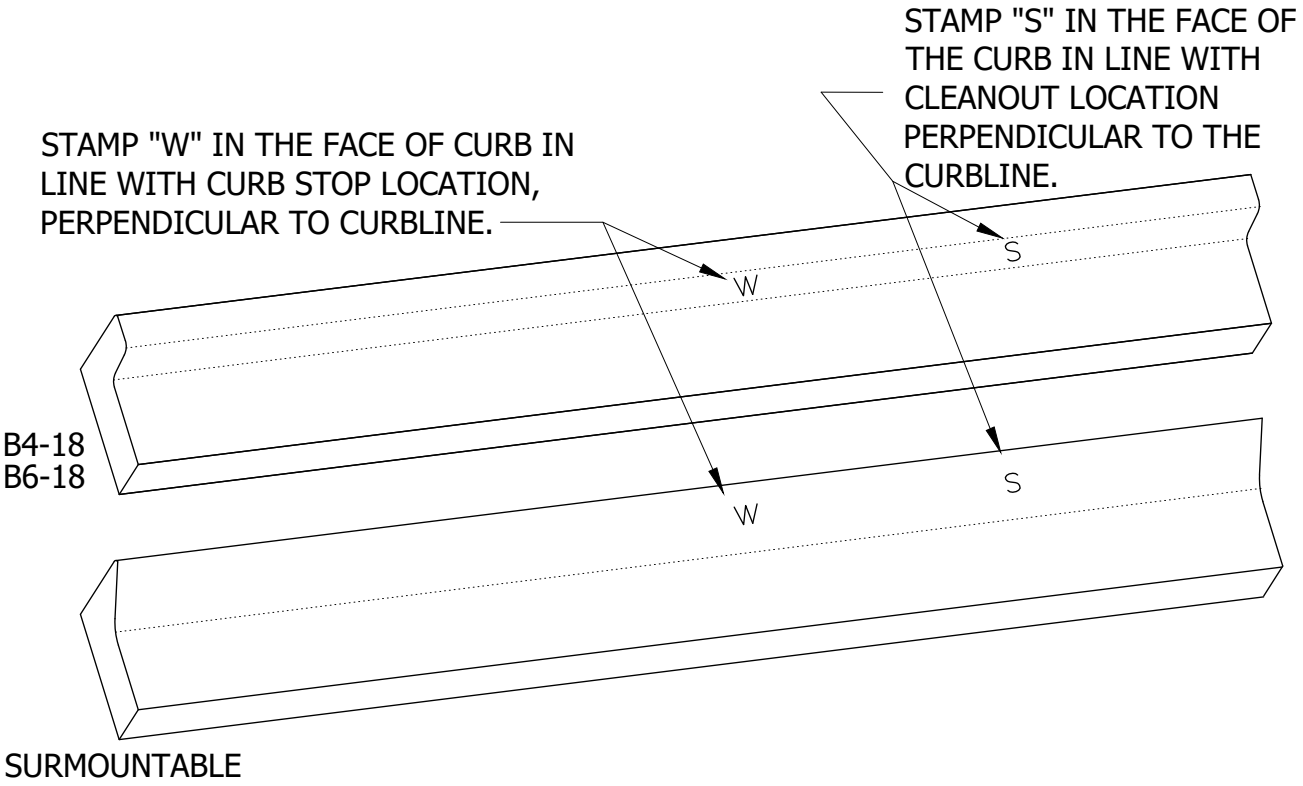


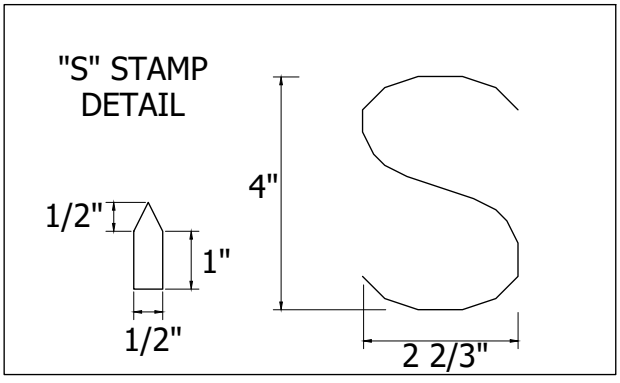


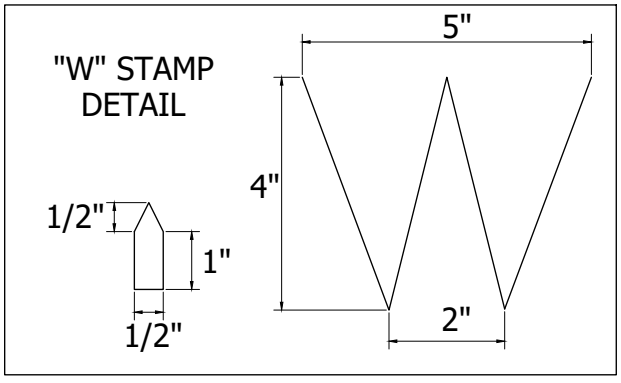


Cottage Grove
Where Pride and Prosperity Meet

## STANDARD DETAILS

WATER AND SEWER SERVICE LOCATION STAMP IN CURB

COTTAGE GROVE, MINNESOTA

JANUARY 2026

PLATE NO.
STR-11

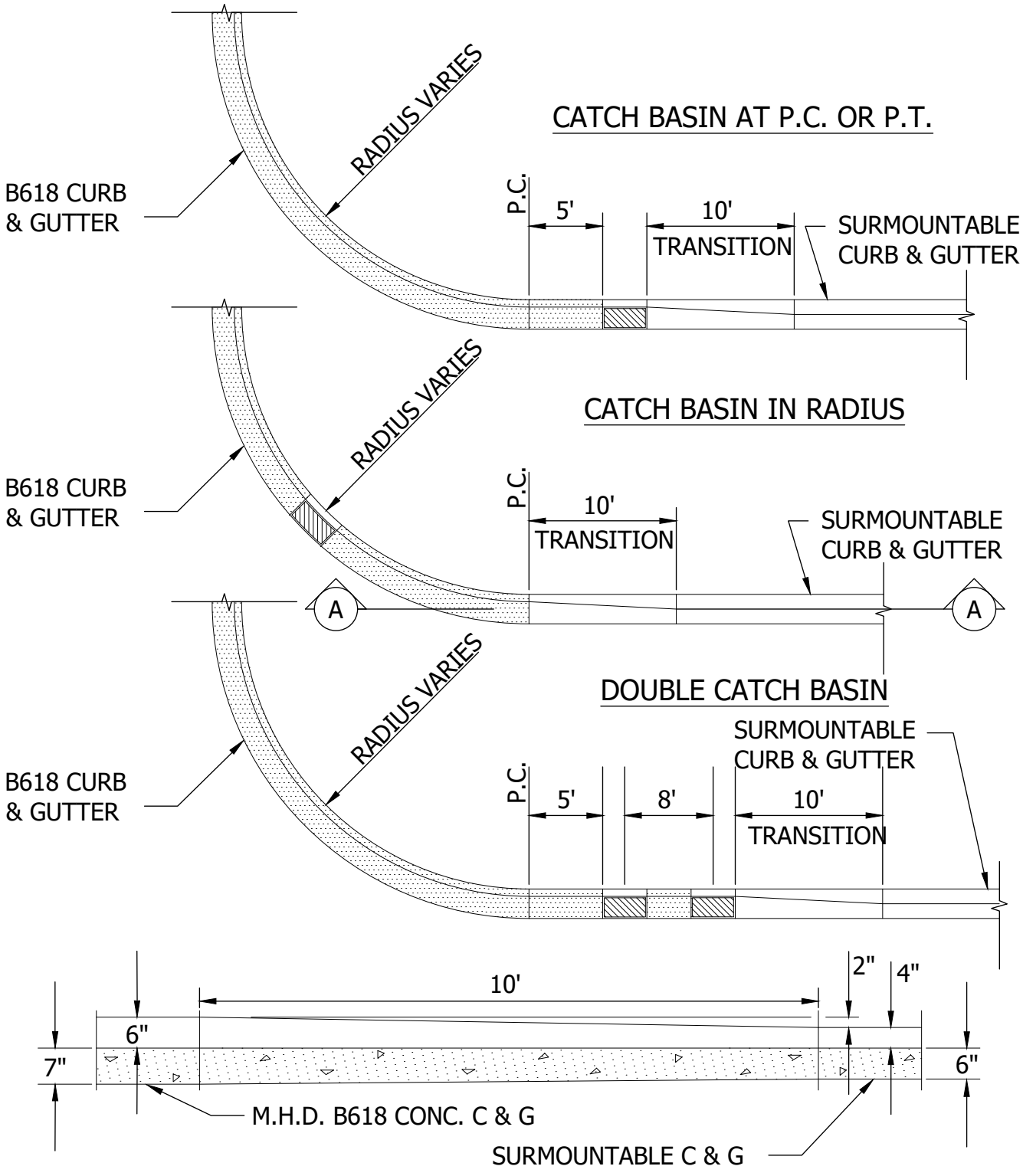


SECTION A-A

Cottage Grove
Where Pride and Prosperity Meet

STANDARD DETAILS

CONCRETE CURB AND GUTTER
TRANSITION

COTTAGE GROVE, MINNESOTA

JANUARY 2026

PLATE NO.
STR-12

48_STR12.DWG

NOTE:
SURMOUNTABLE CURB & GUTTER TO BE FORMED INTO A B618 TYPE AT CATCHBASIN.

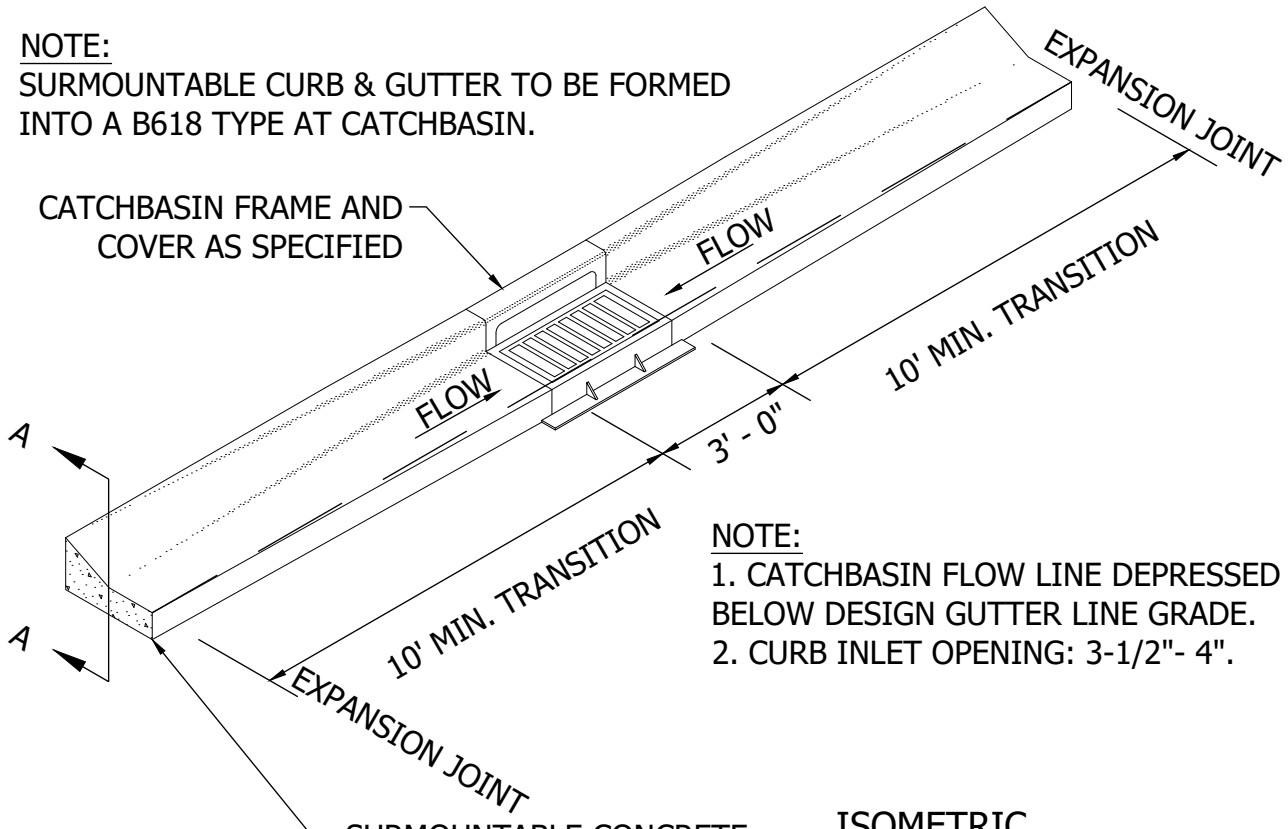


ISOMETRIC

NOTE:
1. CATCHBASIN FLOW LINE DEPRESSED 1" BELOW DESIGN GUTTER LINE GRADE.
2. CURB INLET OPENING: 3-1/2"- 4".

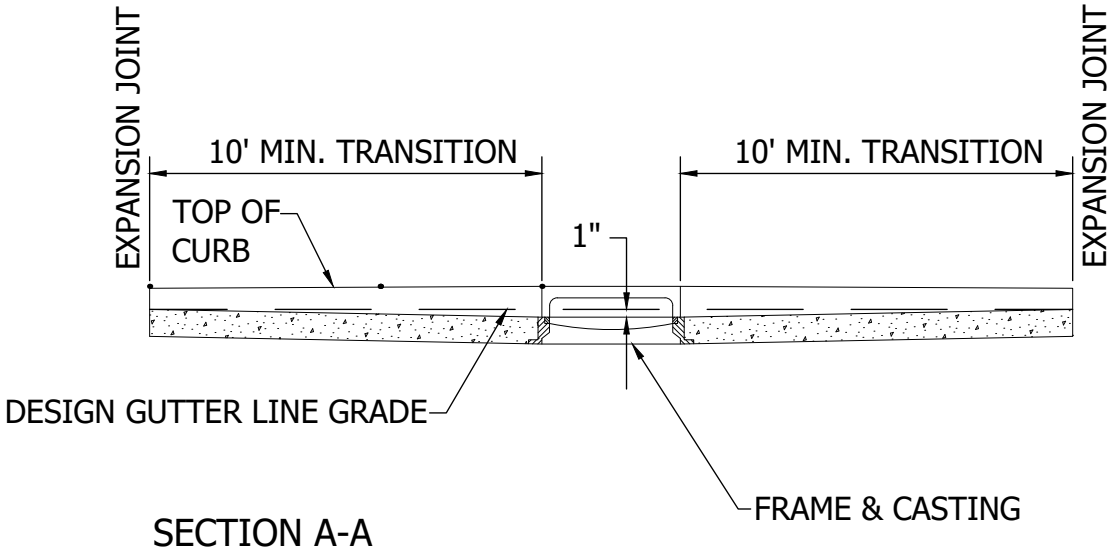


SECTION A-A

Cottage Grove
Where Pride and Prosperity Meet

# STANDARD DETAILS

SURMOUNTABLE CURB AND GUTTER CONSTRUCTION AT CATCHBASIN

COTTAGE GROVE, MINNESOTA

JANUARY 2026

PLATE NO.
STR-13

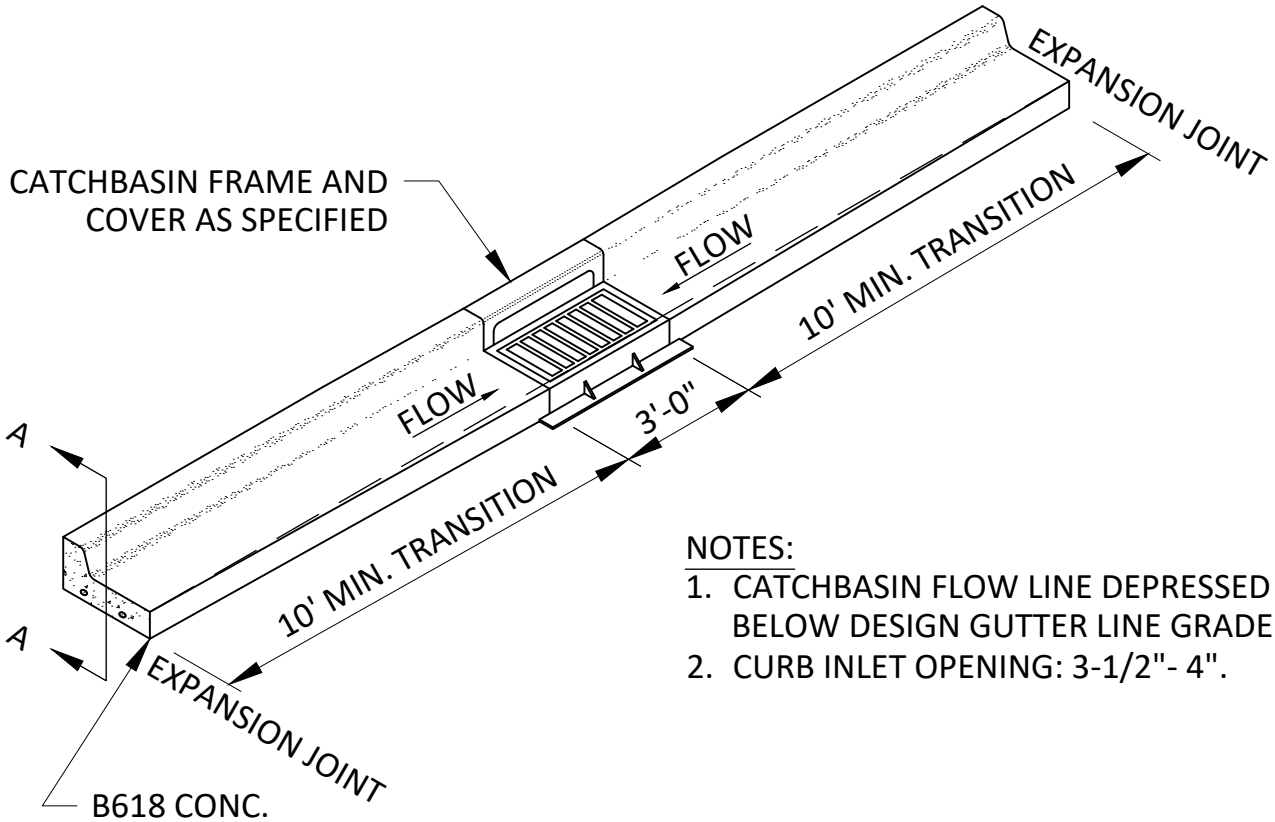


NOTES:

1. CATCHBASIN FLOW LINE DEPRESSED 1" BELOW DESIGN GUTTER LINE GRADE.
2. CURB INLET OPENING: 3-1/2"- 4".

ISOMETRIC

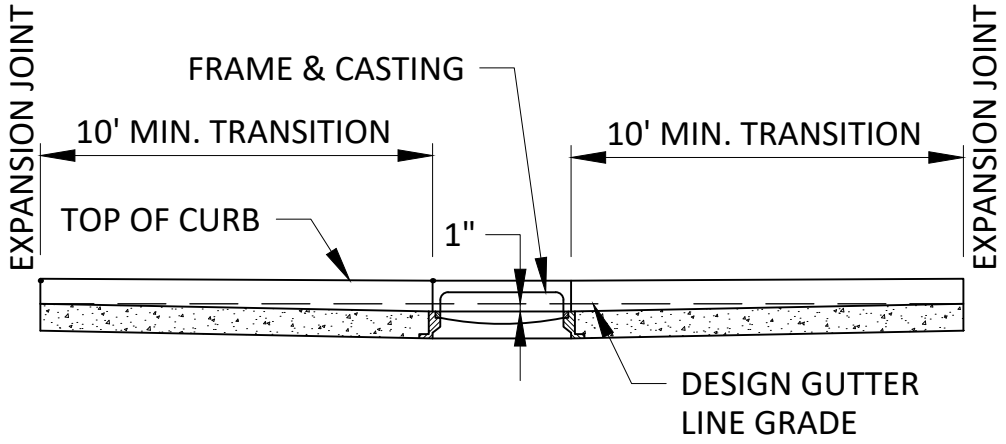


SECTION A-A

Cottage Grove
Where Pride and Prosperity Meet

STANDARD DETAILS

B618 CURB AND GUTTER
CONSTRUCTION AT CATCHBASIN
COTTAGE GROVE, MINNESOTA

JANUARY 2026

PLATE NO.
STR-14

48_STR14.DWG

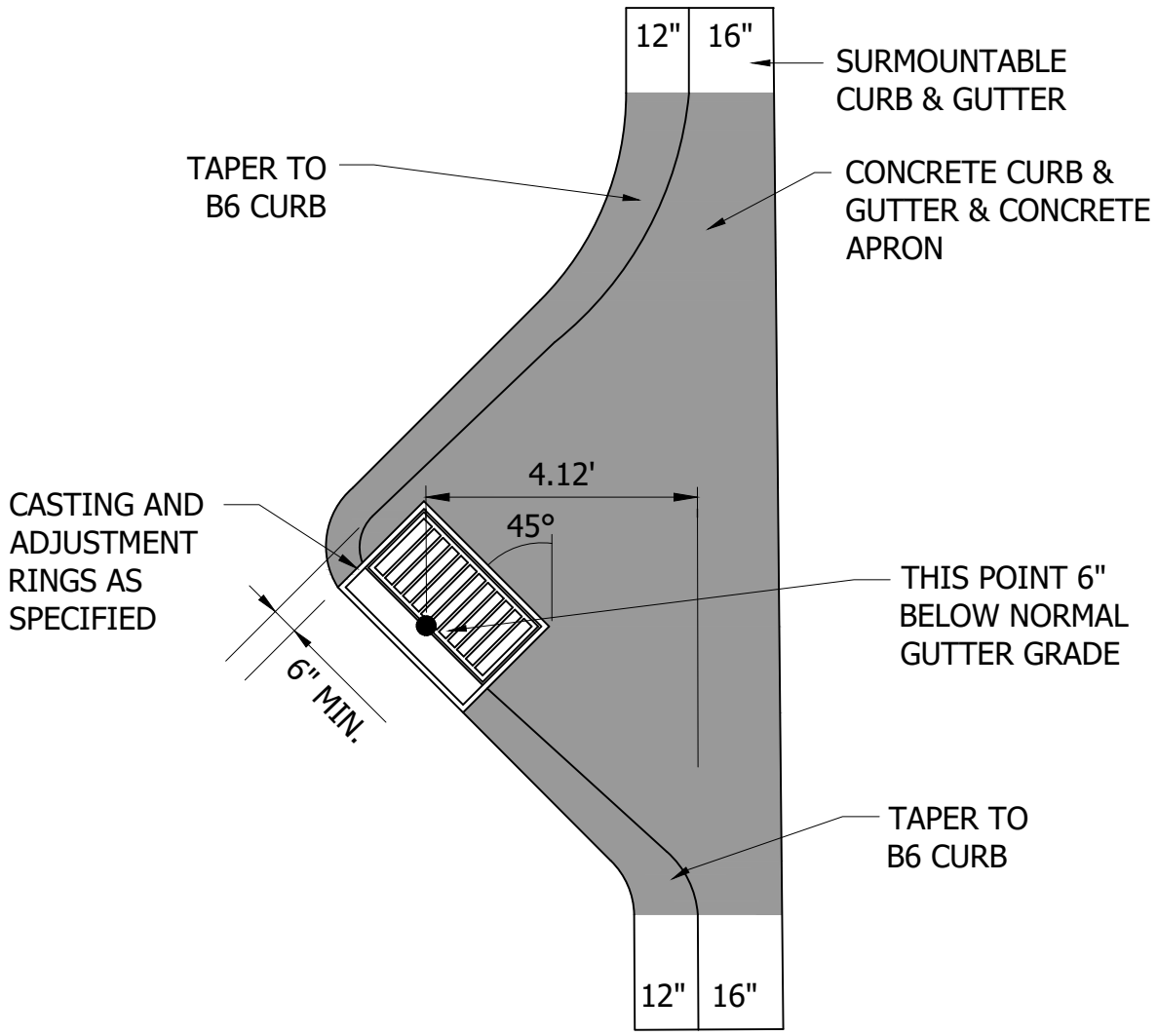


NOTE:
APRON PAYMENT IS FOR SHADED AREA ONLY.

Cottage Grove
Where Pride and Prosperity Meet

# STANDARD DETAILS

4' DIA. HIGH CAPACITY
CATCH BASIN B618 CURB

COTTAGE GROVE, MINNESOTA

JANUARY 2026

PLATE NO.
STR-15

48_STR15.DWG

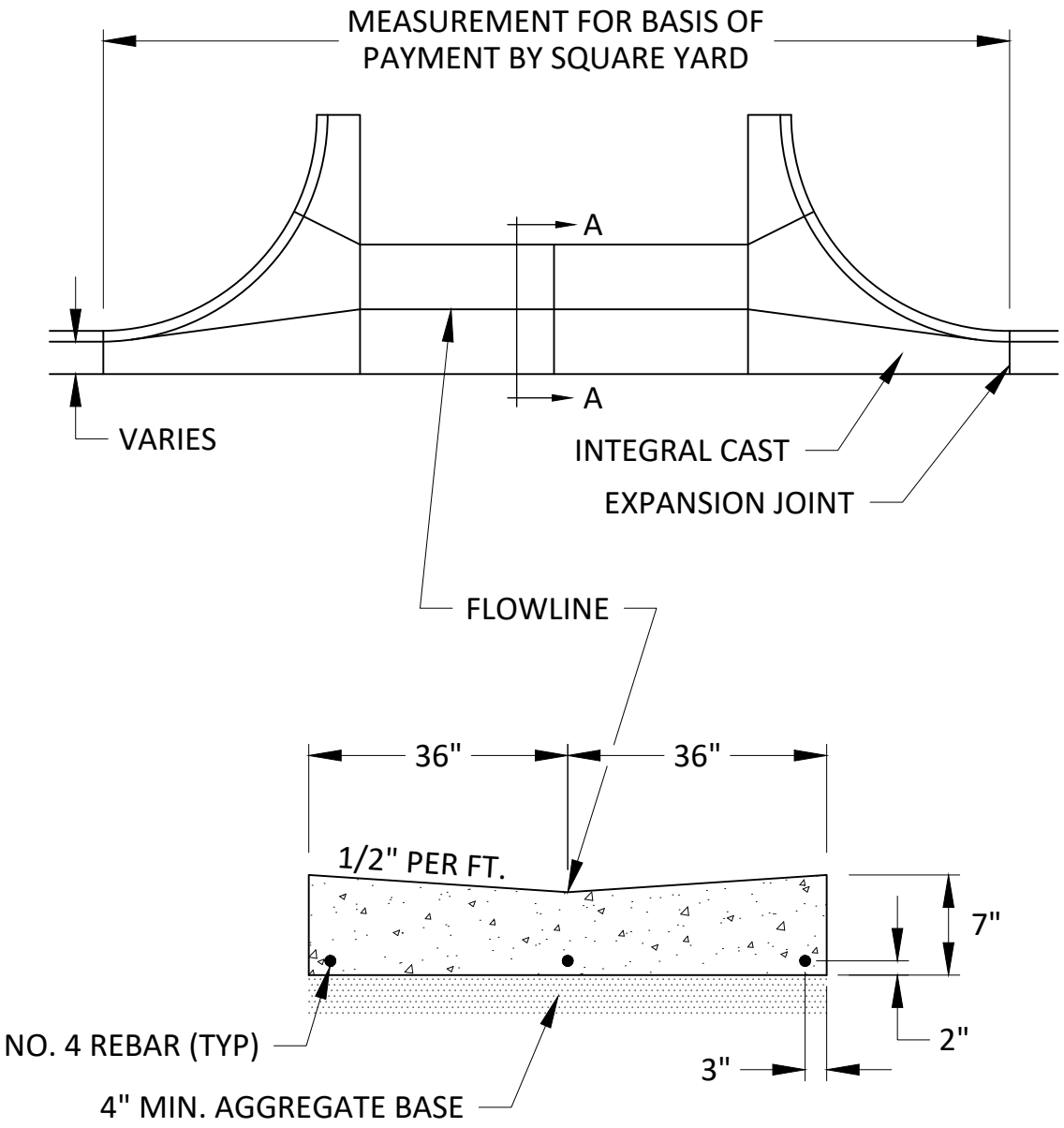


SECTION A-A

THRU CONCRETE GUTTER

Cottage Grove

Where Pride and Prosperity Meet

STANDARD DETAILS

CONCRETE VALLEY GUTTER

COTTAGE GROVE, MINNESOTA

JANUARY 2026

PLATE NO.

STR-16

48_STR16.DWG

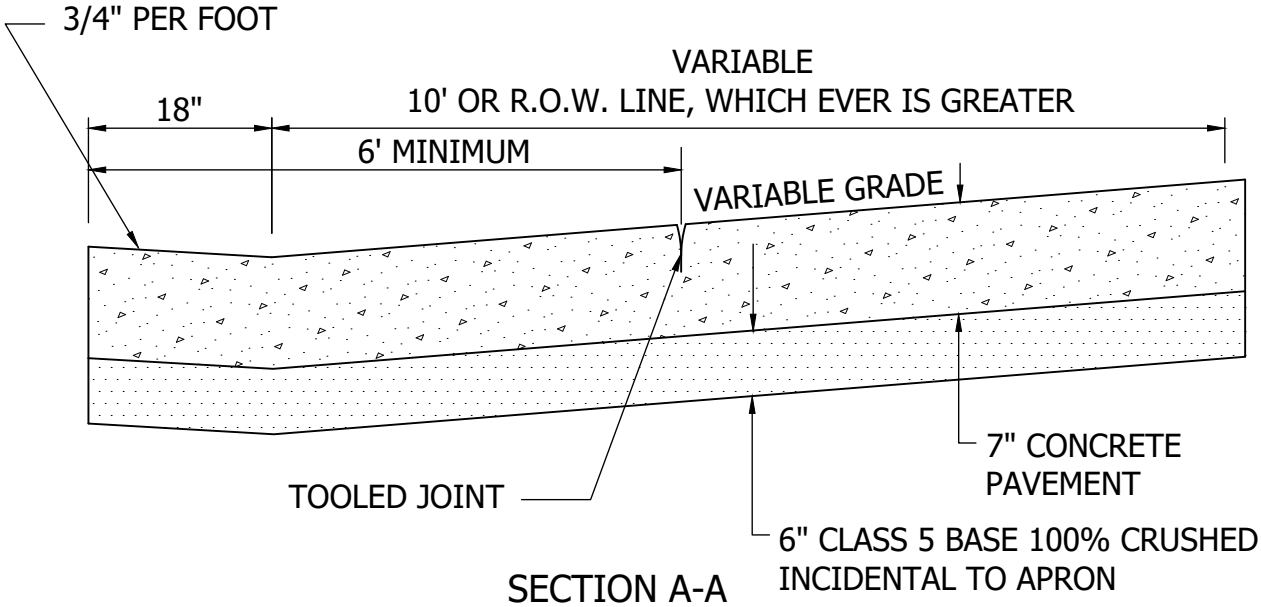


SECTION A-A

NO SCALE

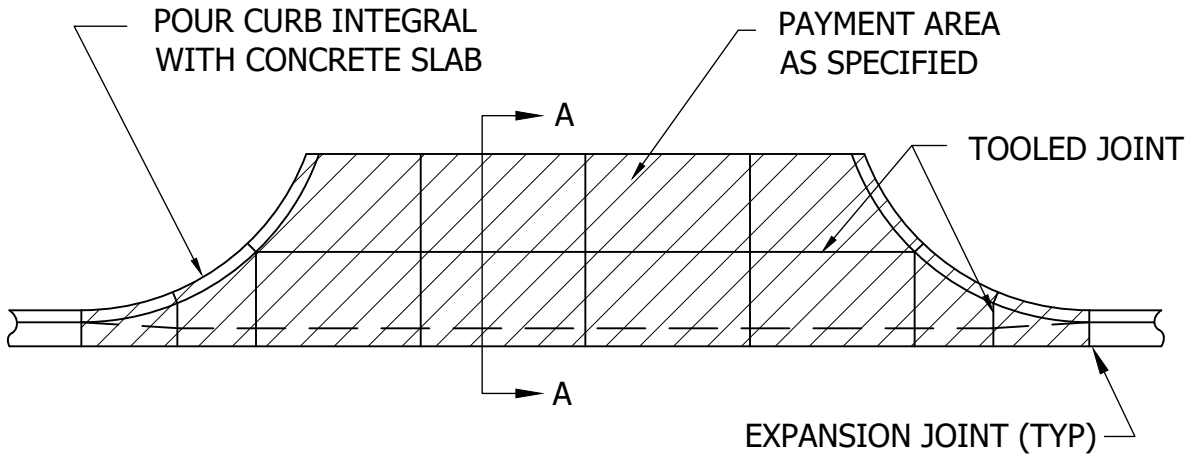


PLAN

NO SCALE

Cottage Grove

Where Pride and Prosperity Meet

STANDARD DETAILS

CONCRETE DRIVEWAY APRON
COMMERCIAL

COTTAGE GROVE, MINNESOTA

JANUARY 2026

PLATE NO.
STR-17

48_STR17.DWG

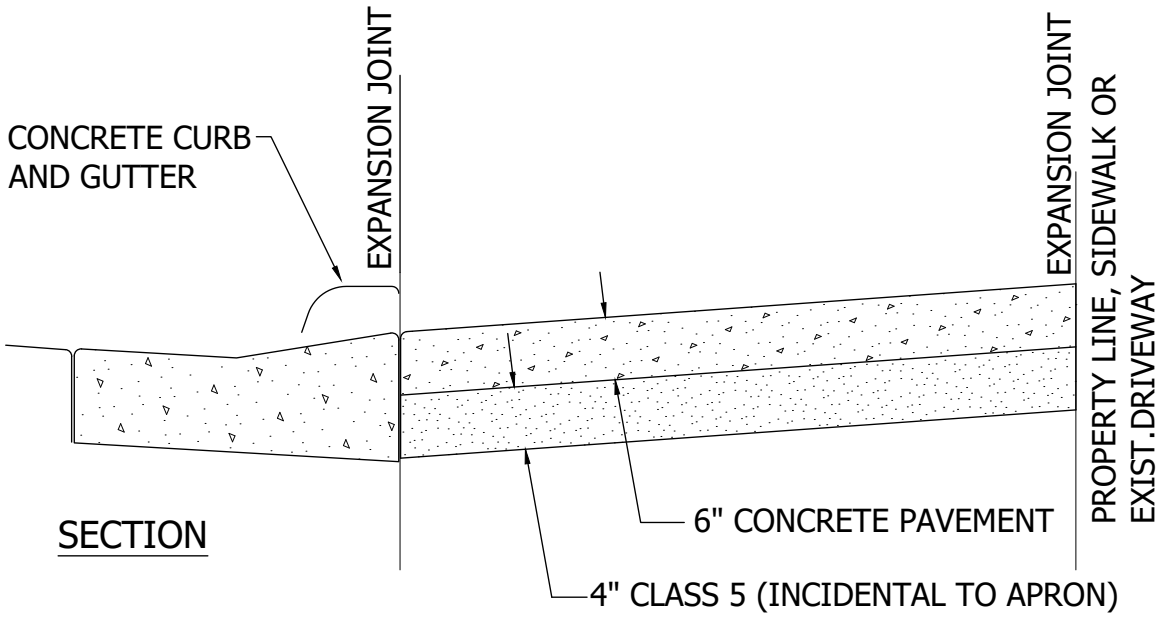


SECTION

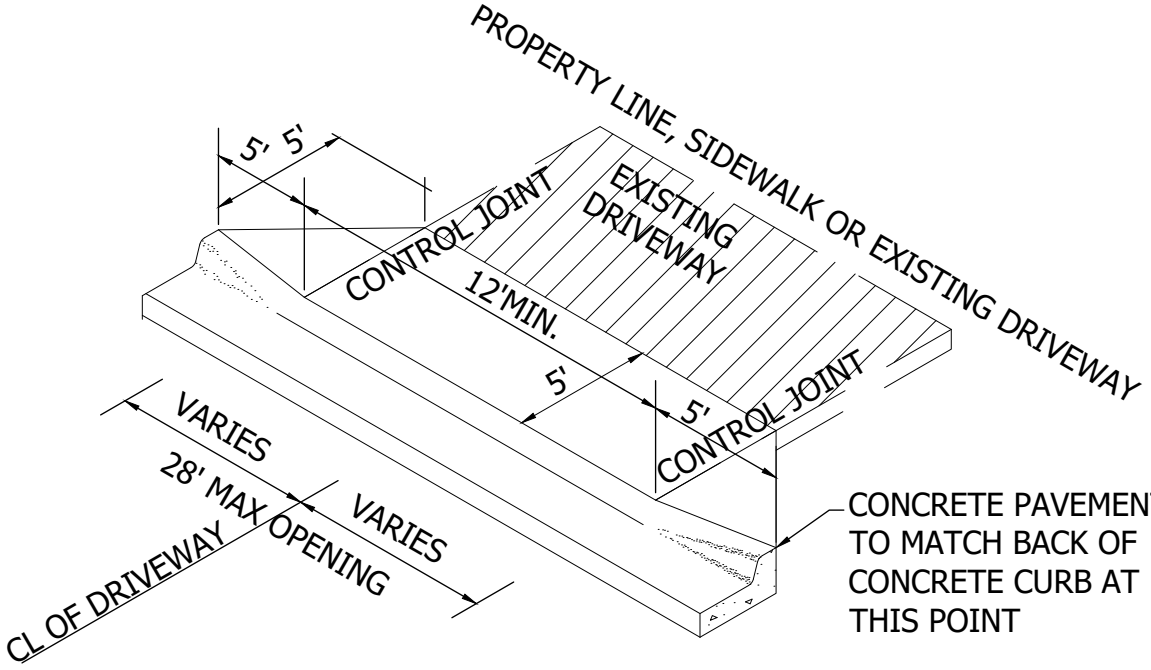


ISOMETRIC

NOTE:
CONTROL JOINTS IN CONCRETE CURB NOT TO EXCEED 10' SPACING THROUGH DRIVEWAY SECTION.

Cottage Grove
Where Pride and Prosperity Meet

STANDARD DETAILS

CONCRETE DRIVEWAY APRON
RESIDENTIAL

COTTAGE GROVE, MINNESOTA

JANUARY 2026

PLATE NO.
STR-18

48_STR18.DWG

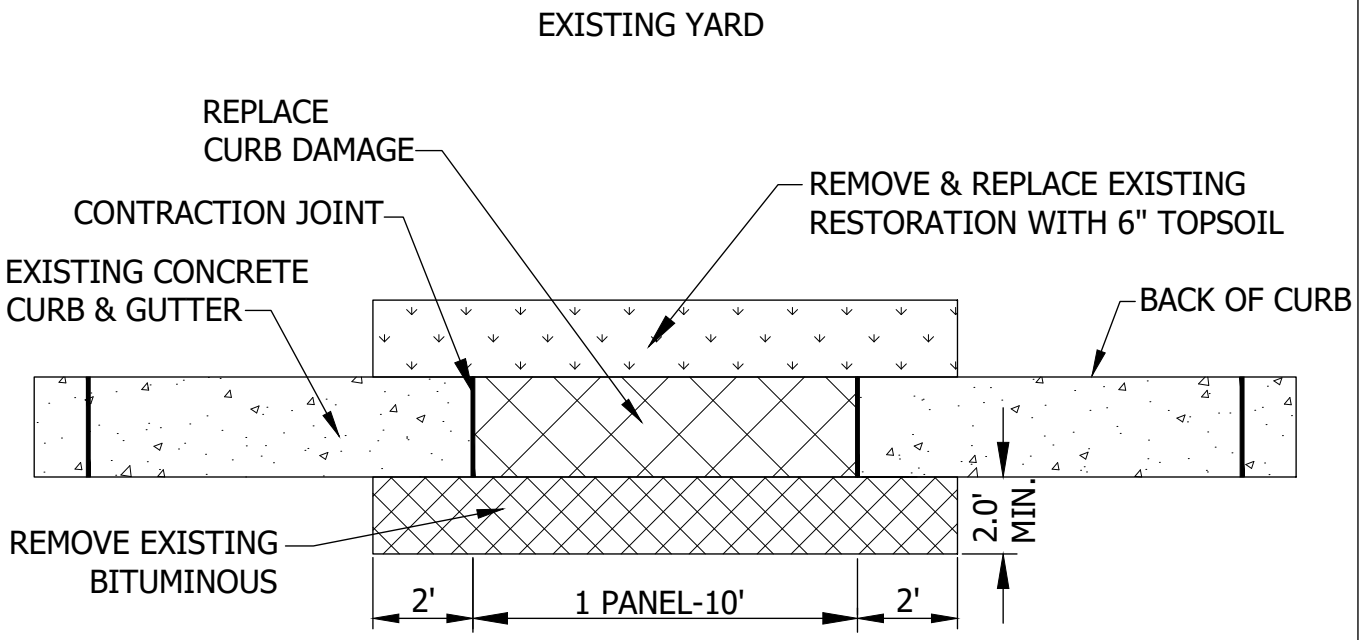


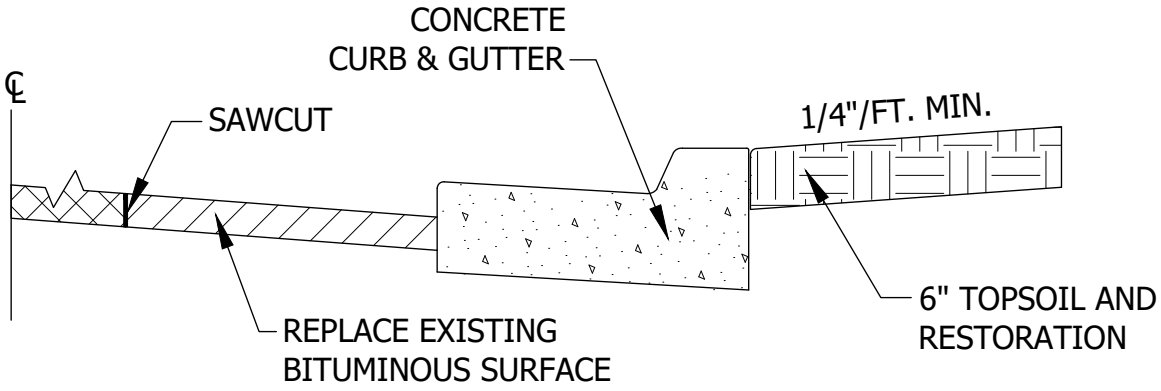


SECTION

Cottage Grove
Where Pride and Prosperity Meet

STANDARD DETAILS

CONCRETE CURB REPLACEMENT

COTTAGE GROVE, MINNESOTA

JANUARY 2026

PLATE NO.
STR-19

48_STR19.DWG

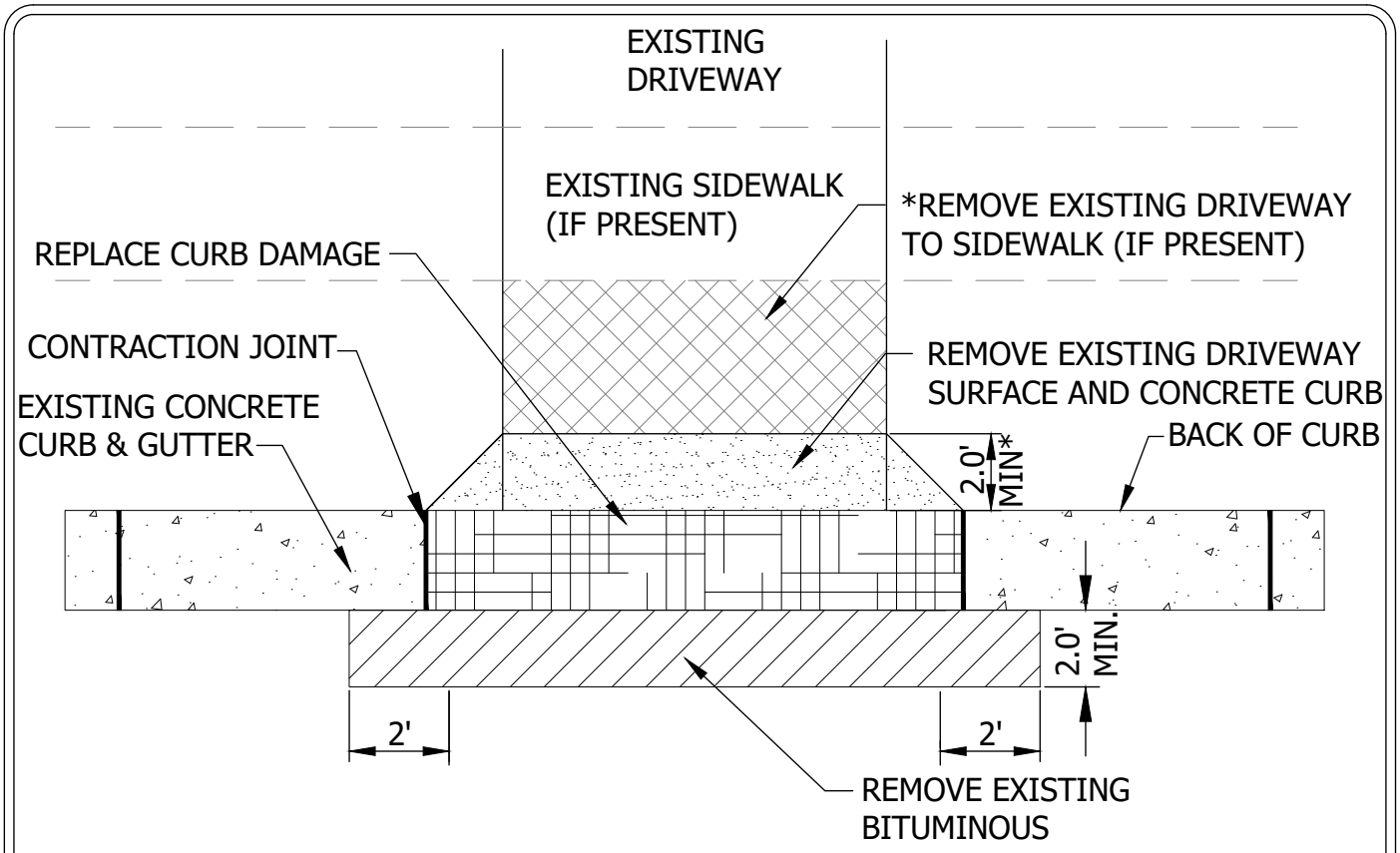


EXISTING BITUMINOUS SURFACE

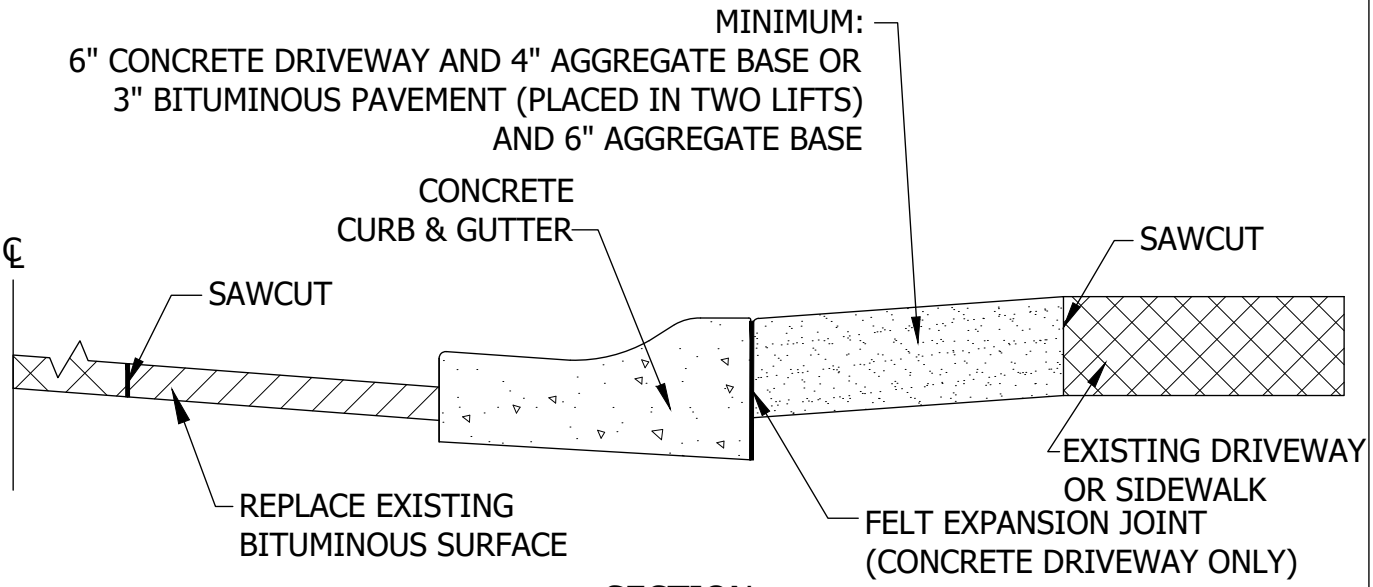


SECTION

Cottage Grove
Where Pride and Prosperity Meet

# STANDARD DETAILS

CONCRETE CURB REPLACEMENT AT
DRIVEWAY LOCATION

COTTAGE GROVE, MINNESOTA

JANUARY 2026

PLATE NO.
STR-20

48_STR20.DWG

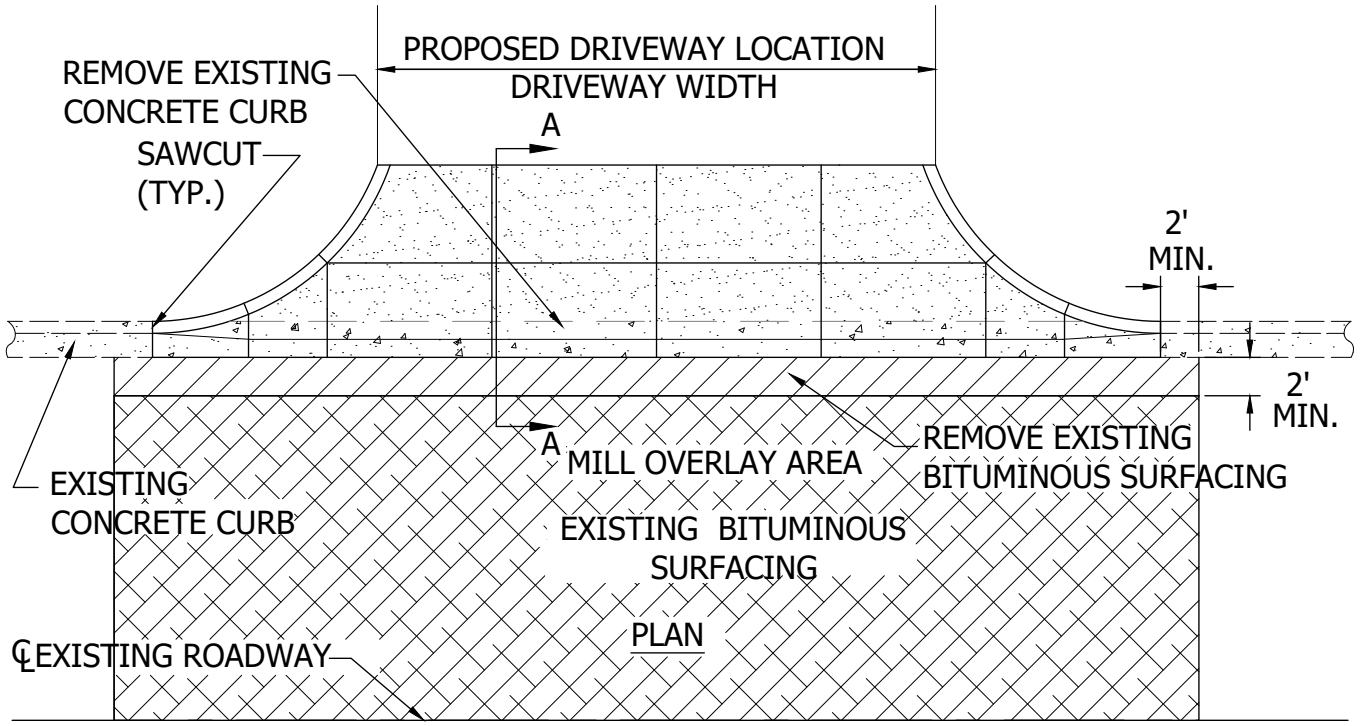


SEE DETAIL PLATE STR-17 FOR CONCRETE DRIVEWAY APRON COMMERCIAL DETAILS

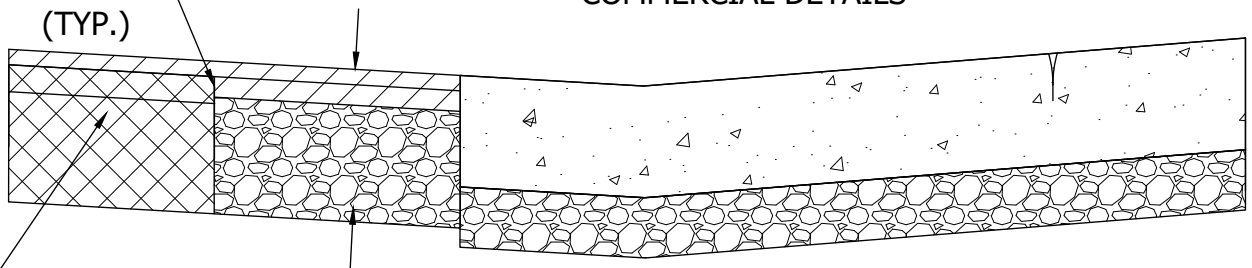


SECTION A-A

NOTES:

1. CITY RIGHT-OF-WAY PERMIT IS REQUIRED PRIOR TO CONSTRUCTION.
2. FOR MATERIAL SPECIFICATION, REFER TO RIGHT-OF-WAY PERMIT.

Cottage Grove
Where Pride and Prosperity Meet

# STANDARD DETAILS

CONCRETE COMMERCIAL DRIVEWAY APRON OR CURB AND GUTTER CONNECT TO EXISTING STREET

COTTAGE GROVE, MINNESOTA

JANUARY 2026

PLATE NO.
STR-21

48_STR21.DWG

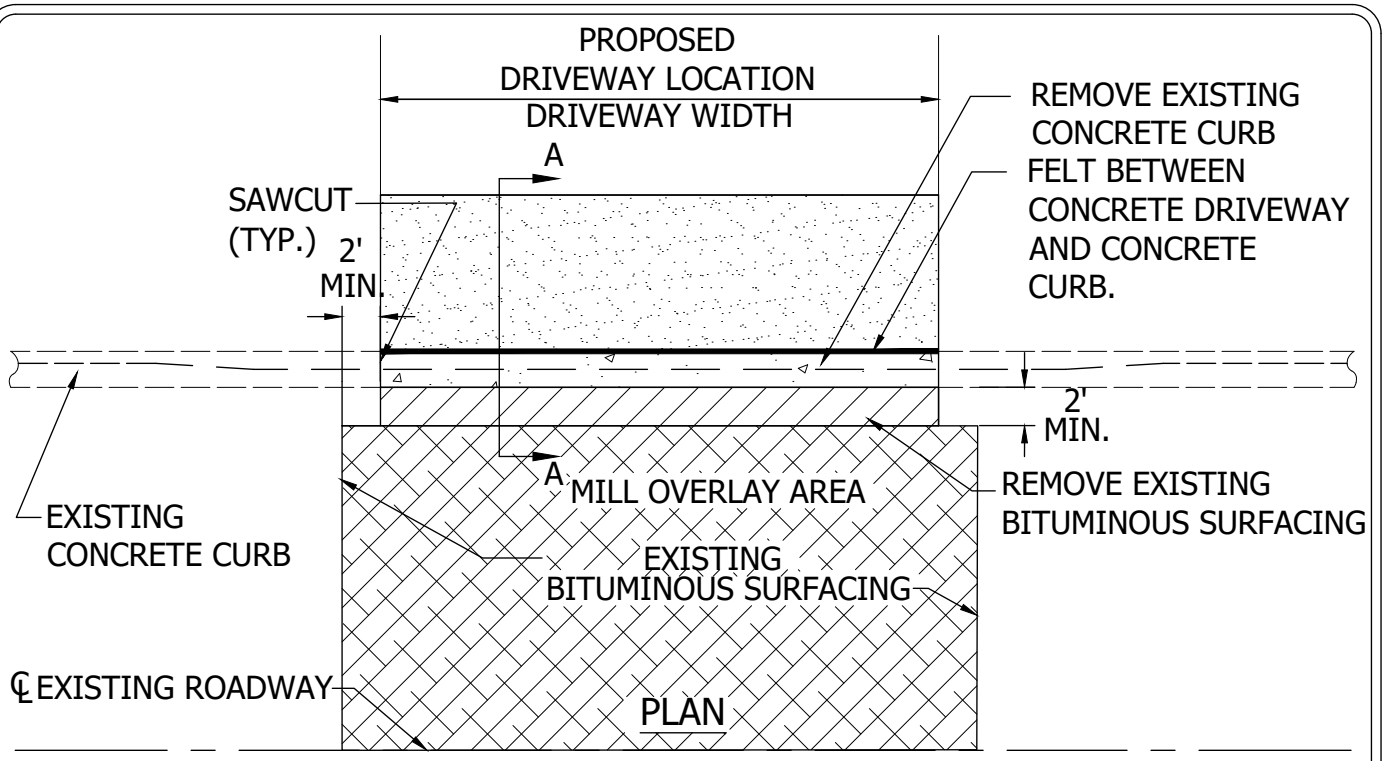


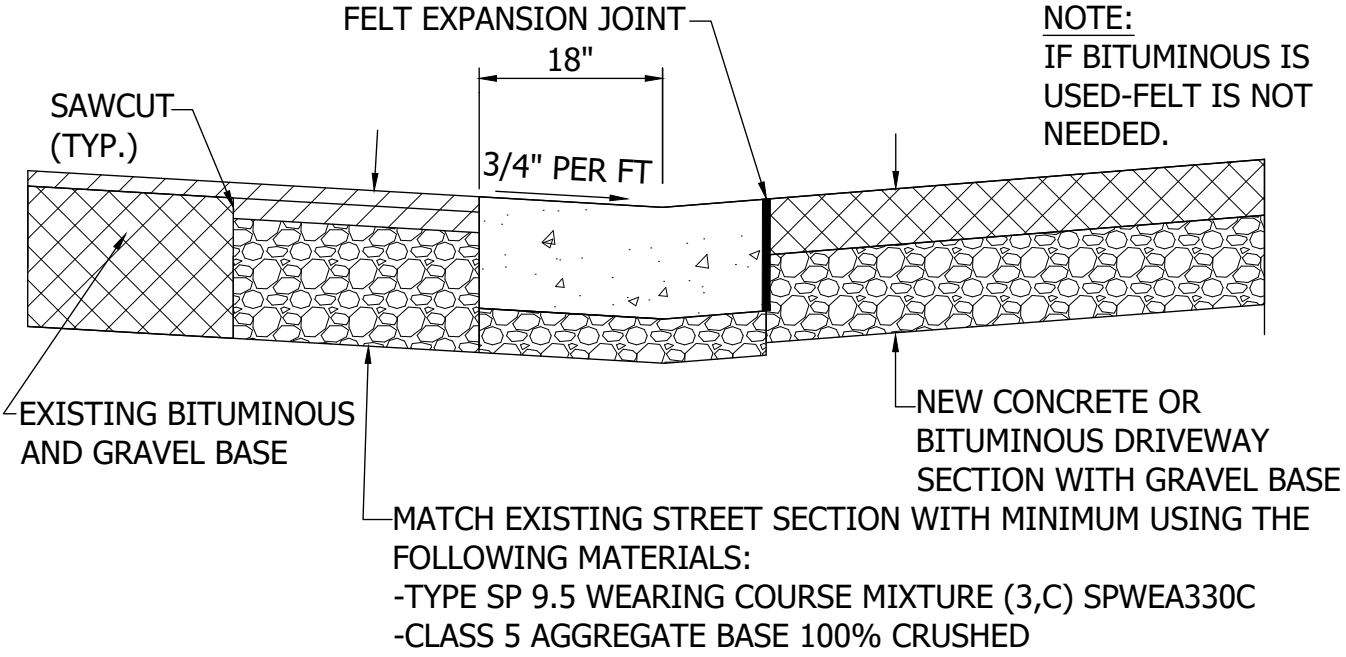


MATCH EXISTING STREET SECTION WITH MINIMUM USING THE FOLLOWING MATERIALS:
-TYPE SP 9.5 WEARING COURSE MIXTURE (3,C) SPWEA330C
-CLASS 5 AGGREGATE BASE 100% CRUSHED

## SECTION A-A

NOTES:
1. CITY RIGHT-OF-WAY PERMIT IS REQUIRED PRIOR TO CONSTRUCTION.
2. FOR MATERIAL SPECIFICATION, REFER TO RIGHT-OF-WAY PERMIT.

Cottage Grove
Where Pride and Prosperity Meet

# STANDARD DETAILS

RESIDENTIAL DRIVEWAY
CONNECT TO EXISTING STREET

COTTAGE GROVE, MINNESOTA

JANUARY 2026

PLATE NO.
STR-22

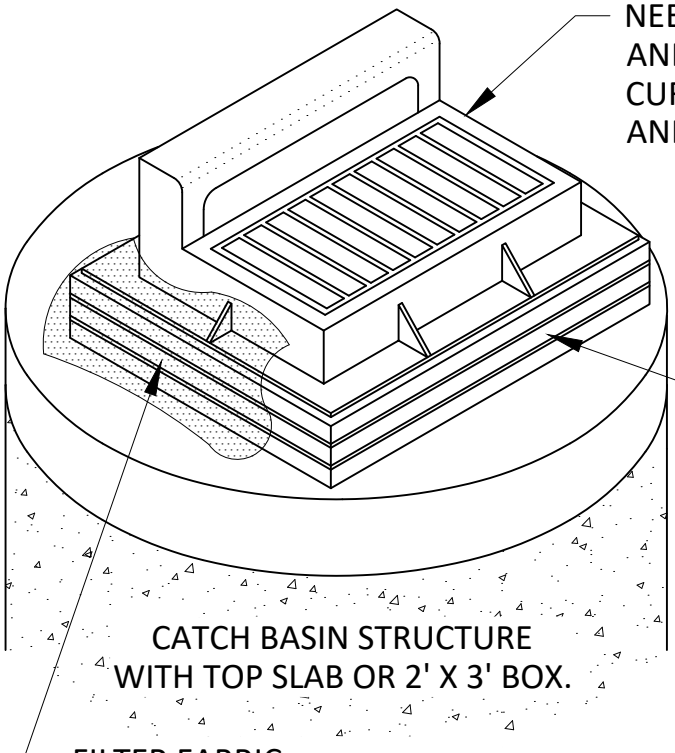

NEENAH R-3067-VB CATCH BASIN FRAME AND GRATE. SHALL BE FURNISHED WITH CURB INLET BOX AND 3" DIA FRONT FACE AND 4" MAX OPENING.

HIGH DENSITY POLYETHYLENE (HDPE) ADJUSTMENT RINGS. MIN HEIGHT 3", MAX HEIGHT 12".

CATCH BASIN STRUCTURE
WITH TOP SLAB OR 2' X 3' BOX.

FILTER FABRIC

NEENAH R1642B MANHOLE FRAME AND COVER. SHALL BE FURNISHED WITH 2 CONCEALED PICK HOLES AND STAMPED "SANITARY SEWER" OR "STORM SEWER".

HIGH DENSITY POLYETHYLENE (HDPE) ADJUSTMENT RINGS. MIN HEIGHT 3", MAX HEIGHT 12".

MANHOLE STRUCTURE
WITH TOP SLAB OR CONE SECTION.

Cottage Grove
Where Pride and Prosperity Meet

STANDARD DETAILS

CATCHBASIN AND MANHOLE ADJUSTMENT

COTTAGE GROVE, MINNESOTA

JANUARY 2026

PLATE NO.
STR-23

48_STR23.DWG

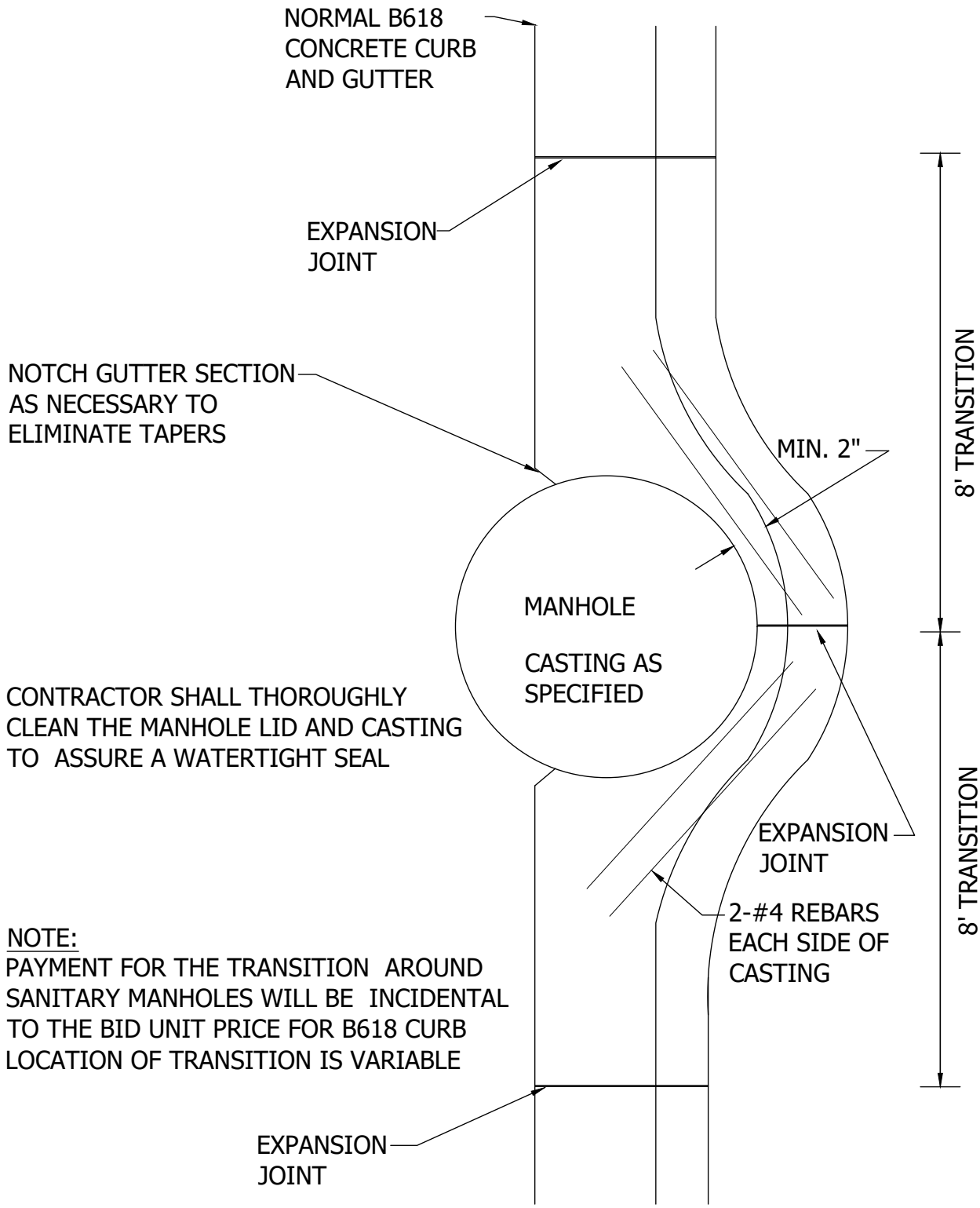


Cottage Grove
Where Pride and Prosperity Meet

# STANDARD DETAILS

MANHOLE CASTING IN B618
CURB AND GUTTER

COTTAGE GROVE, MINNESOTA

JANUARY 2026

PLATE NO.
STR-24

48_STR24.DWG

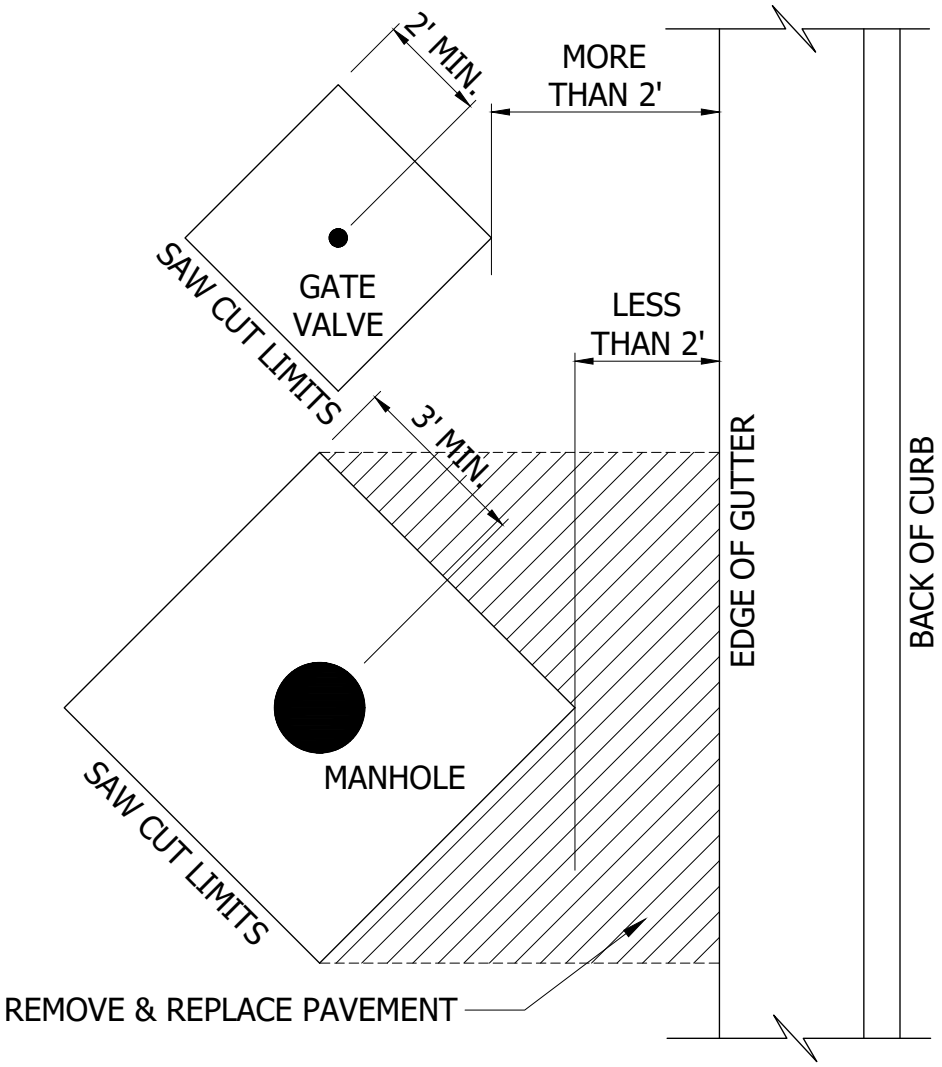


Cottage Grove
Where Pride and Prosperity Meet

# STANDARD DETAILS

STRUCTURE ADJUSTMENT PATCH
(BITUMINOUS OR CONCRETE)

COTTAGE GROVE, MINNESOTA

JANUARY 2026

PLATE NO.
STR-25

48_STR25.DWG

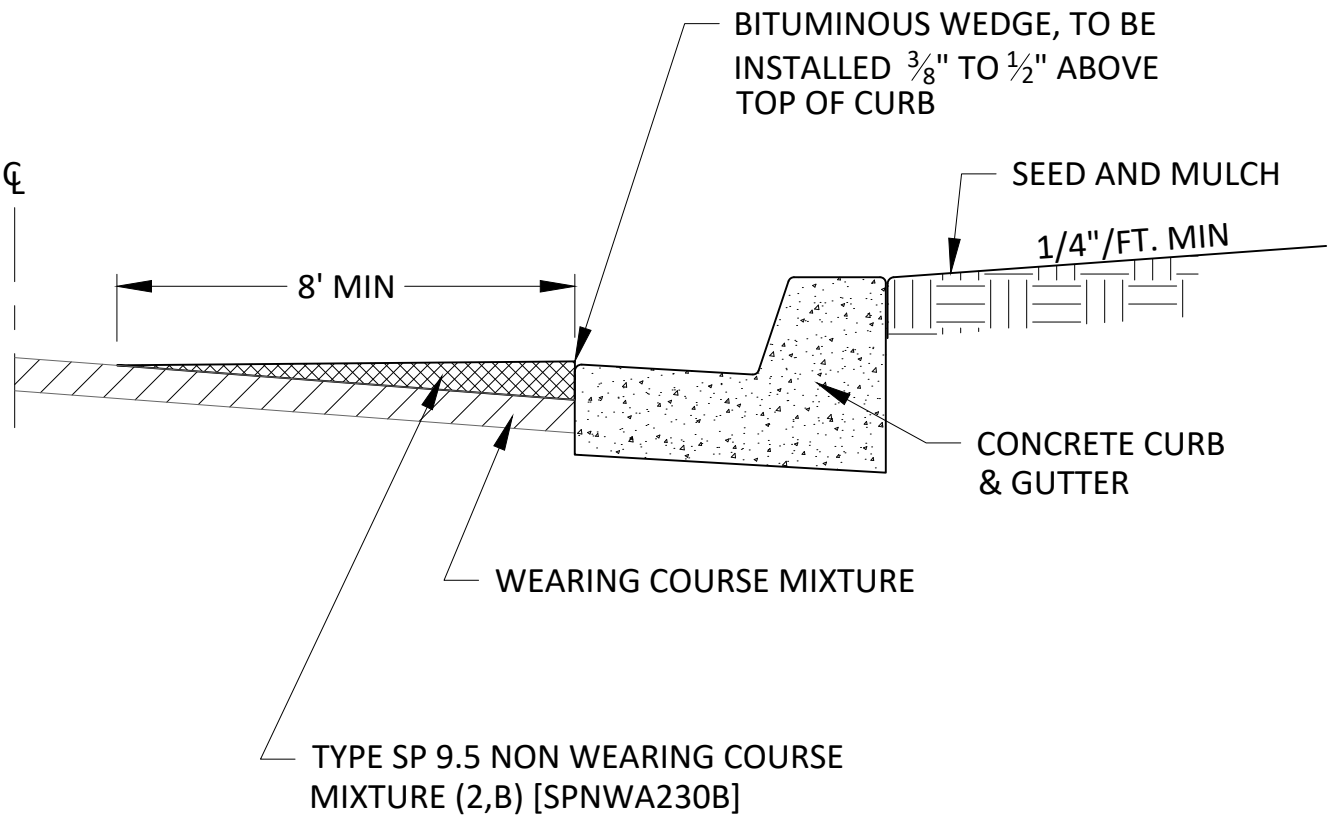


Cottage Grove
Where Pride and Prosperity Meet

STANDARD DETAILS

CONCRETE CURB PROTECTION
BITUMINOUS WEDGE
COTTAGE GROVE, MINNESOTA

JANUARY 2026

PLATE NO.
STR-26

48_STR26.DWG

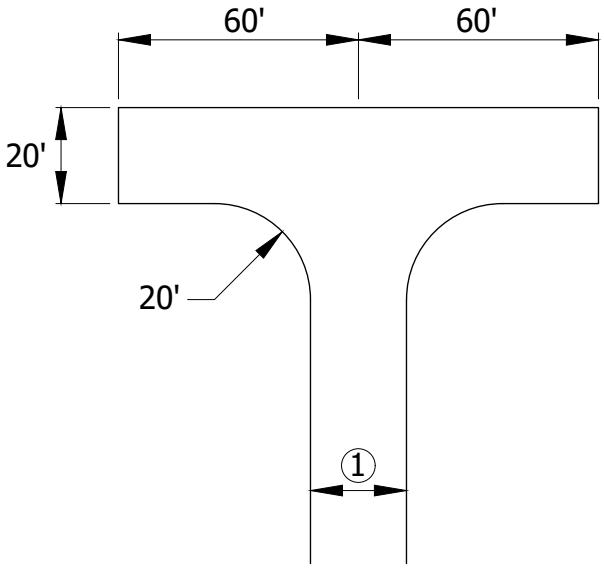


"T" TYPE

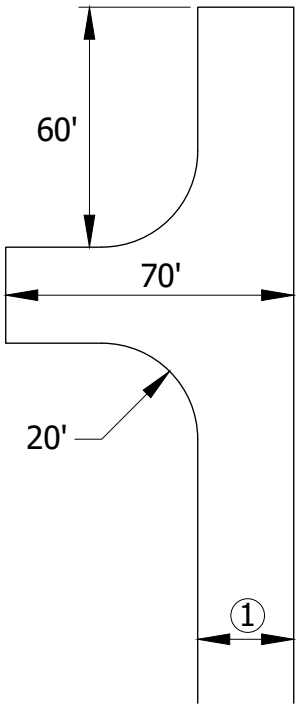


HAMMERHEAD
OR BRANCH
TYPE

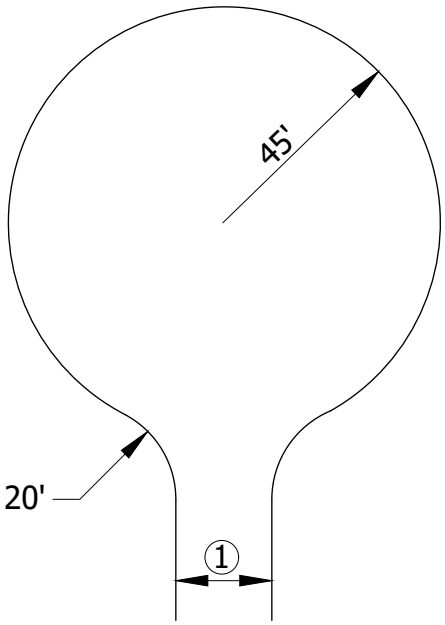


CUL-DE-SAC

NOTE:
① MATCH EXISTING STREET WIDTH.

Cottage Grove
Where Pride and Prosperity Meet

STANDARD DETAILS

TEMPORARY TURNAROUND

COTTAGE GROVE, MINNESOTA

JANUARY 2026

PLATE NO.
STR-27

48_STR27.DWG

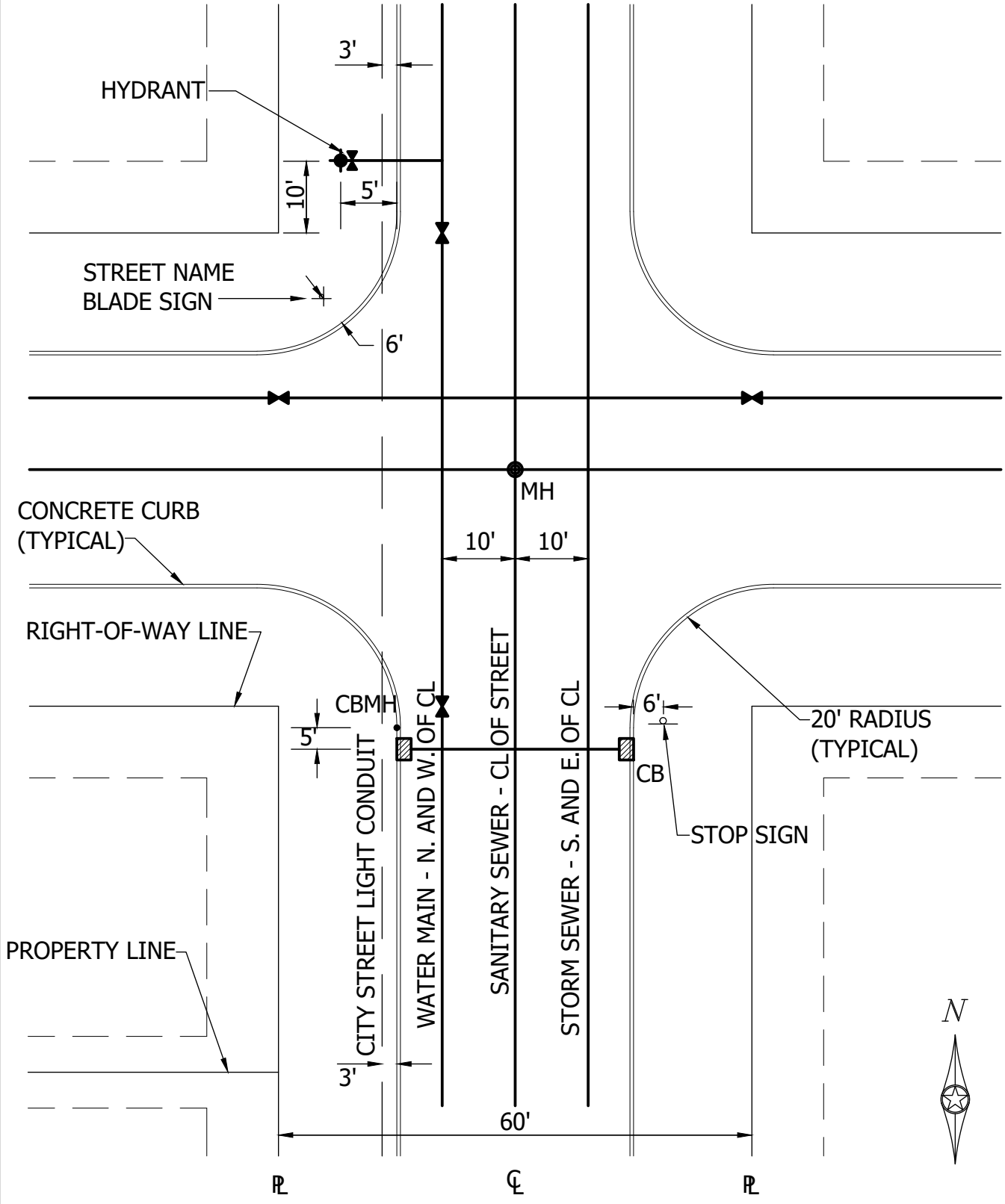


Cottage Grove
Where Pride and Prosperity Meet

# STANDARD DETAILS

TYPICAL UTILITY LOCATIONS

COTTAGE GROVE, MINNESOTA

JANUARY 2026

PLATE NO.
STR-28

48_STR28.DWG

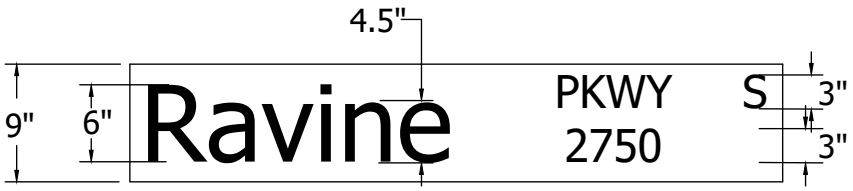


PUBLIC - THROUGH STREET

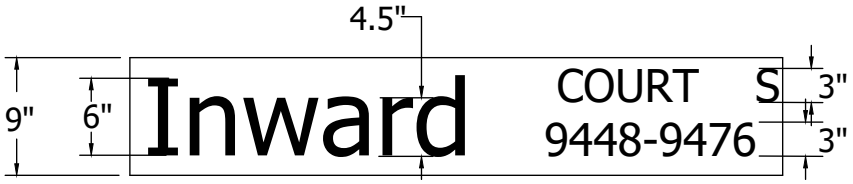


PUBLIC - CUL-DE-SAC

STANDARD CONSTRUCTION NOTES FOR STREET NAME SIGNS

1. ALL STREET SIGNS SHALL BE 3M DIAMOND GRADE DG3 DOUBLE-FACED EXTRUDED BLADES.
2. FIRST LETTER OF SUFFIX SHALL BE UPPERCASE WITH ALL REMAINING LETTERS TO BE LOWERCASE
3. ADDRESS NUMBERS FOR STREET NAME BLADES WILL BE PROVIDED AT A LATER DATE.
4. ALL PUBLIC STEET NAME BLADES SHALL BE "GREEN" IN COLOR. LETTERING ON ALL STREET NAME BLADES SHALL BE HIGH INTENSITY, "WHITE" IN COLOR.

Cottage Grove
Where Pride and Prosperity Meet

STANDARD DETAILS

STREET NAME BLADE SIGNS
PUBLIC STREETS

COTTAGE GROVE, MINNESOTA

JANUARY 2026

PLATE NO.
STR-29

48_STR29.DWG

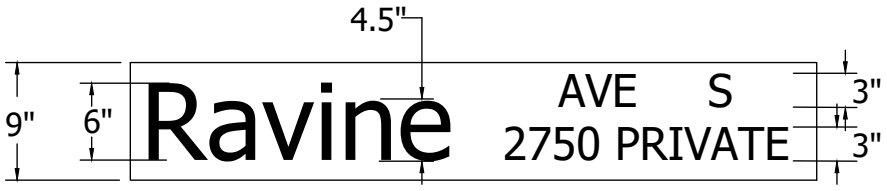


PRIVATE - THROUGH STREET

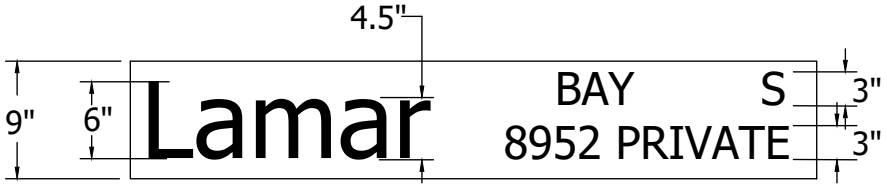


PRIVATE - CUL-DE-SAC

STANDARD CONSTRUCTION NOTES FOR STREET NAME SIGNS

1. ALL STREET SIGNS SHALL BE 3M DIAMOND GRADE DG3 DOUBLE-FACED EXTRUDED BLADES.
2. FIRST LETTER OF SUFFIX SHALL BE UPPERCASE WITH ALL REMAINING LETTERS TO BE LOWERCASE
3. ADDRESS NUMBERS FOR STREET NAME BLADES WILL BE PROVIDED AT A LATER DATE.
4. ALL PRIVATE STEET NAME BLADES SHALL BE "BLUE" IN COLOR. LETTERING ON ALL STREET NAME BLADES SHALL BE HIGH INTENSITY, "WHITE" IN COLOR.

Cottage Grove
Where Pride and Prosperity Meet

STANDARD DETAILS

STREET NAME BLADE SIGNS
PRIVATE STREETS

COTTAGE GROVE, MINNESOTA

JANUARY 2026

PLATE NO.
STR-30

48_STR30.DWG

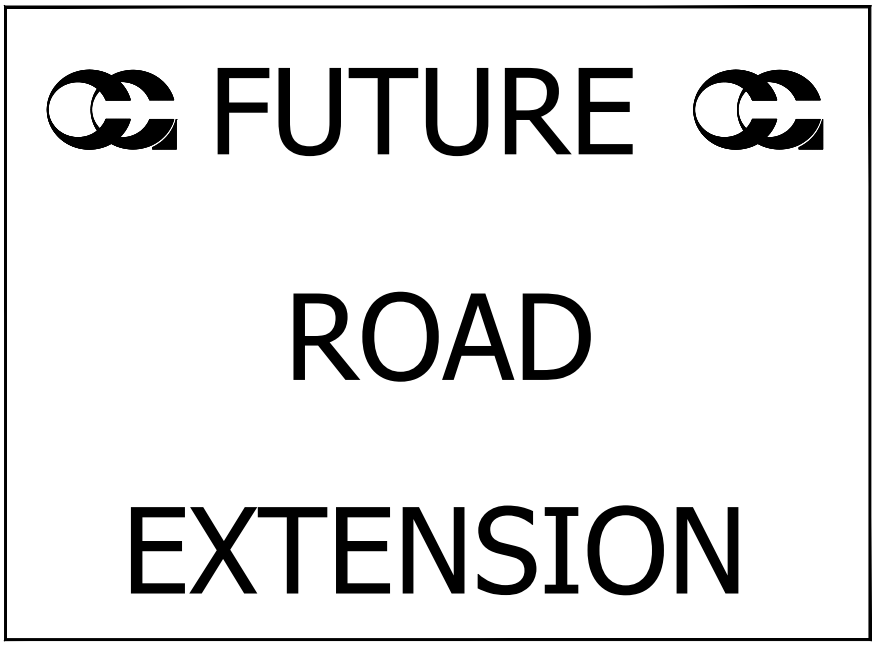


NOTES:
1. SIGN SIZE SHALL BE 18"X24".
2. LETTERS TO BE BLACK ON A WHITE BACKGROUND.
3. THE SIGN IS TO BE MOUNTED ON THE PERMANENT BARRICADES.
4. THE TEXT HEIGHT SHALL BE 4"

Cottage Grove
Where Pride and Prosperity Meet

STANDARD DETAILS

FUTURE ROAD EXTENSION SIGN

COTTAGE GROVE, MINNESOTA

JANUARY 2026

PLATE NO.
STR-31

48_STR31.DWG

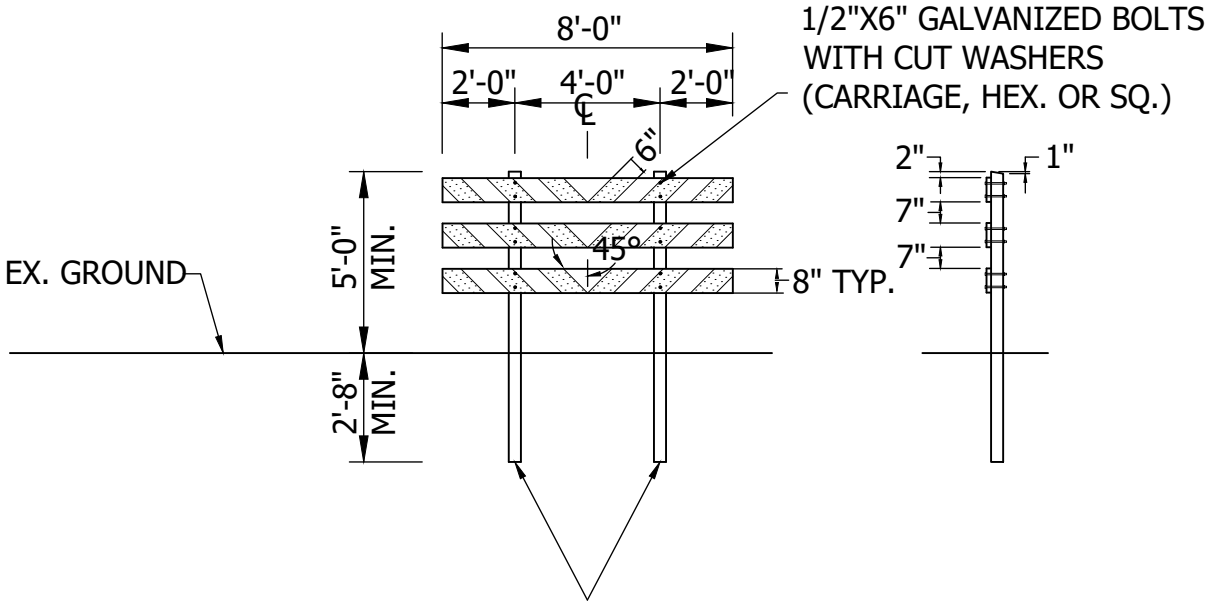


NOTES:

1. THE PLACEMENT OF THE BARRICADE SHALL BE 10'-0" FROM THE END OF THE BITUMINOUS ROAD WITH THE BARRICADE CENTERED ON THE ROADWAY FACING THE FLOW OF TRAFFIC. BARRICADES SHALL BE PLACED WITH MAXIMUM 6' SPACING AND SHALL SPAN ENTIRE ROADWAY WIDTH.
2. ONLY ONE "END OF ROAD MARKER" REQUIRED PER STREET.

Cottage Grove
Where Pride and Prosperity Meet

STANDARD DETAILS

PERMANENT BARRICADE

COTTAGE GROVE, MINNESOTA

JANUARY 2026

PLATE NO.
STR-32

48_STR32.DWG

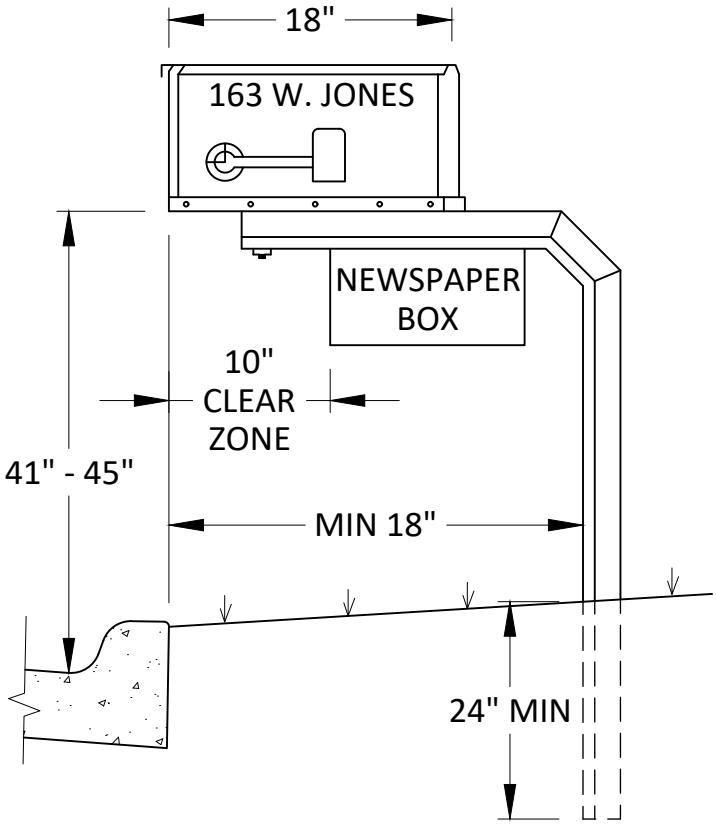


URBAN STREET

NOTES:
DIMENSIONS AS PER U.S. POSTAL SERVICE

ADDRESS MUST BE ON SIDE OF BOX FROM WHICH CARRIER APPROACHES IN LETTERS ABOUT ONE INCH HIGH (OR ON FRONT WHERE BOXES ARE GROUPED).

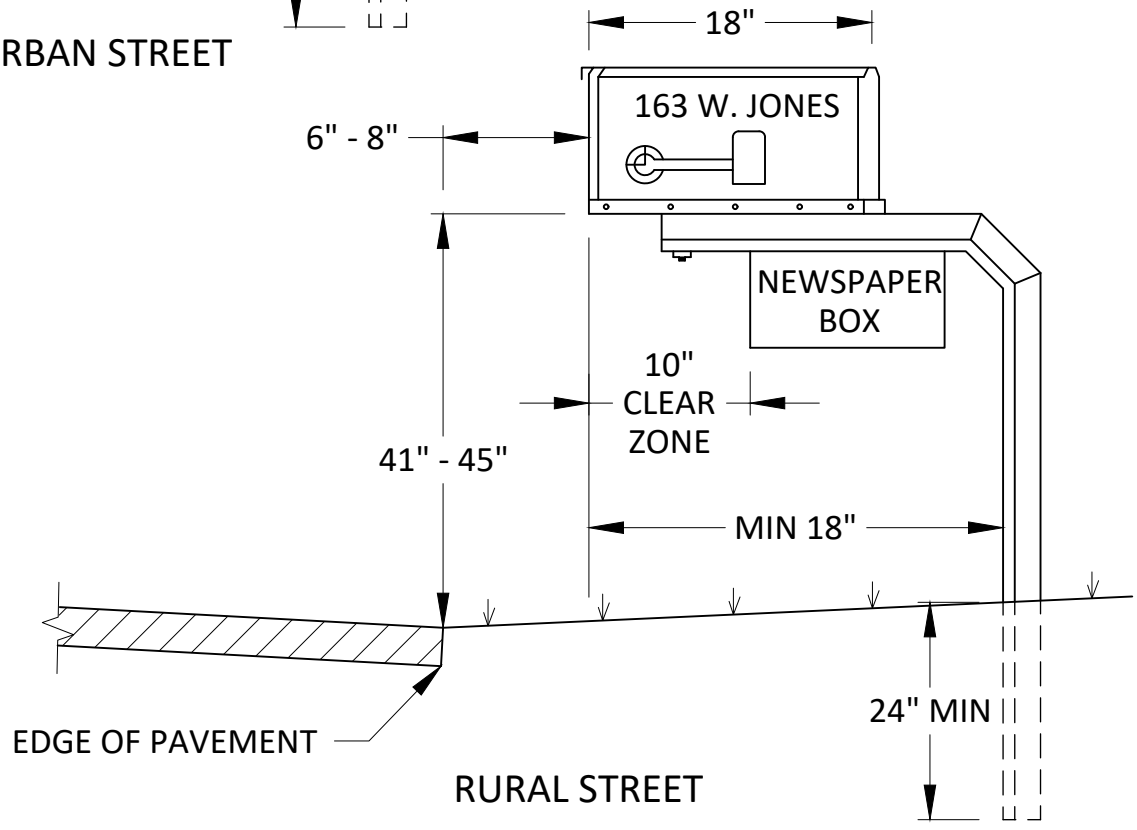


RURAL STREET

Cottage Grove
Where Pride and Prosperity Meet

STANDARD DETAILS

MAIL BOX INSTALLATION

COTTAGE GROVE, MINNESOTA

JANUARY 2026

PLATE NO.
STR-33

48_STR33.DWG

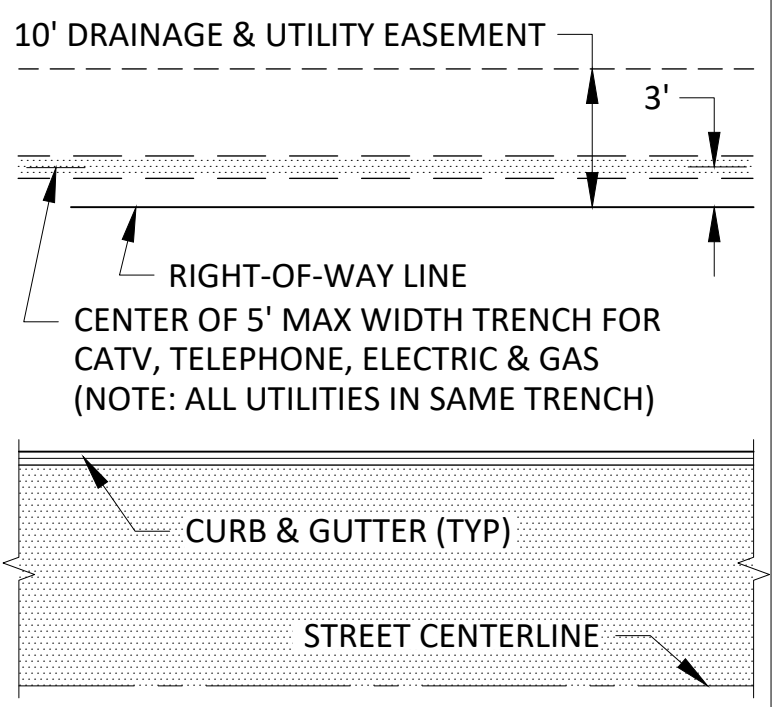


TYPICAL PRIVATE UTILITY PLACEMENT

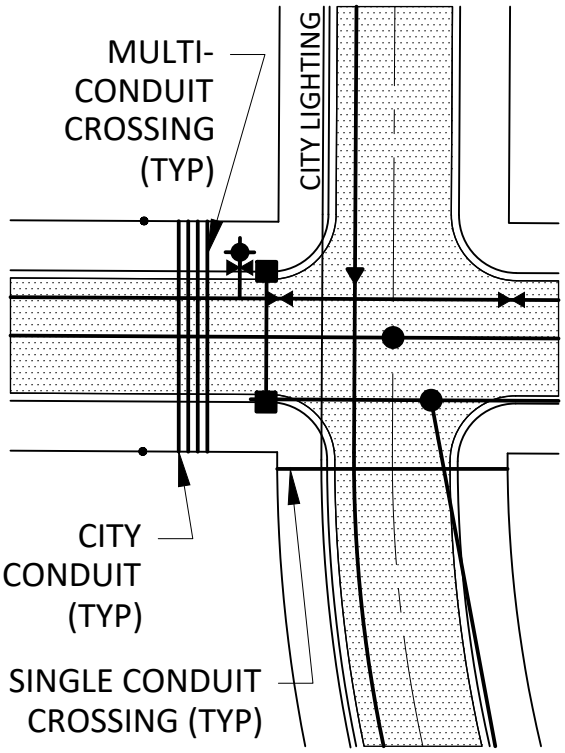


PLAN VIEW

NOTE: ABOVE GROUND UTILITY BOXES SHALL BE LOCATED TO ALLOW FOR 3.0' CLEAR ZONE FOR SIDEWALKS AND TRAILS

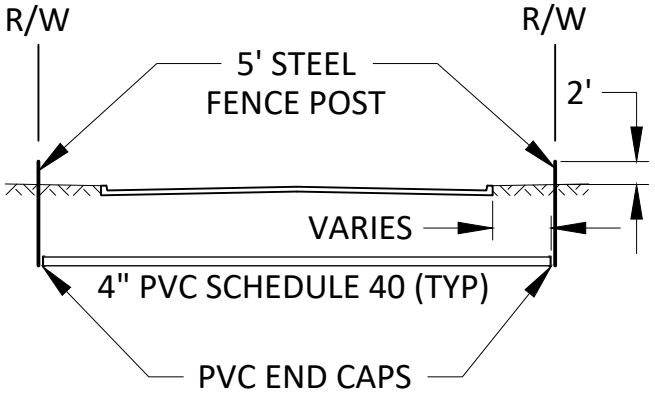


CROSS SECTION

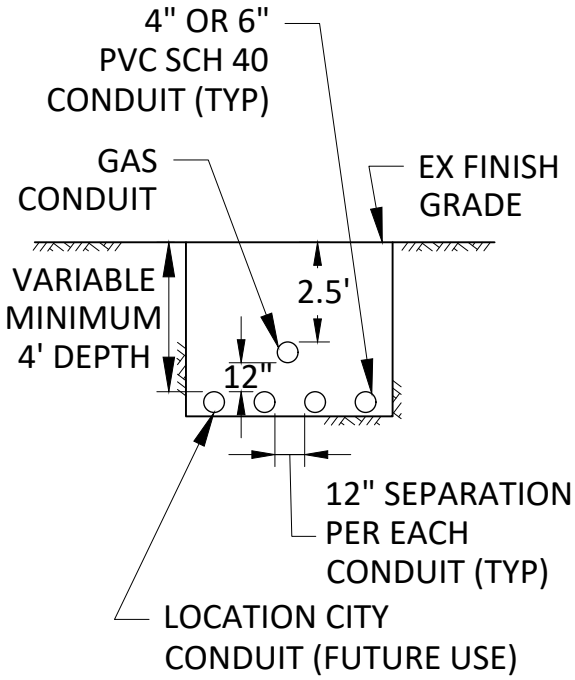


TRENCH CROSS SECTION AT CONDUIT CROSSING

Cottage Grove
Where Pride and Prosperity Meet

STANDARD DETAILS

PRIVATE UTILITY CONDUIT CROSSING

COTTAGE GROVE, MINNESOTA

JANUARY 2026

PLATE NO.
STR-34

48_STR34.DWG

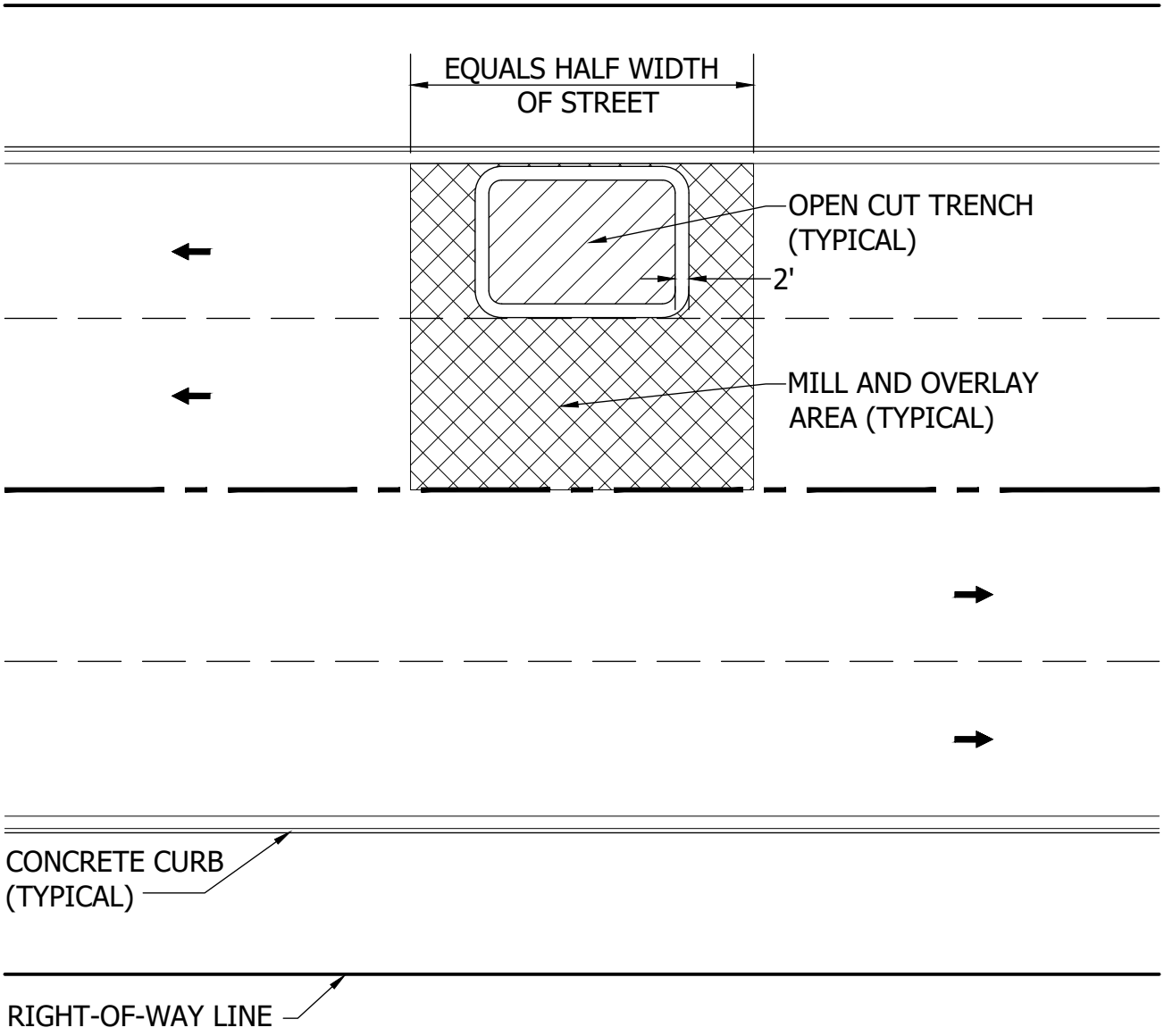


NOTES:

1. REMOVE AND REPLACE EXISTING STREET SECTION 2' WIDER THAN EXCAVATION.
2. MATCH EXISTING DEPTH OF MATERIALS.

Cottage Grove
Where Pride and Prosperity Meet

# STANDARD DETAILS

BITUMINOUS REMOVAL LIMITS

COTTAGE GROVE, MINNESOTA

JANUARY 2026

PLATE NO.
STR-35

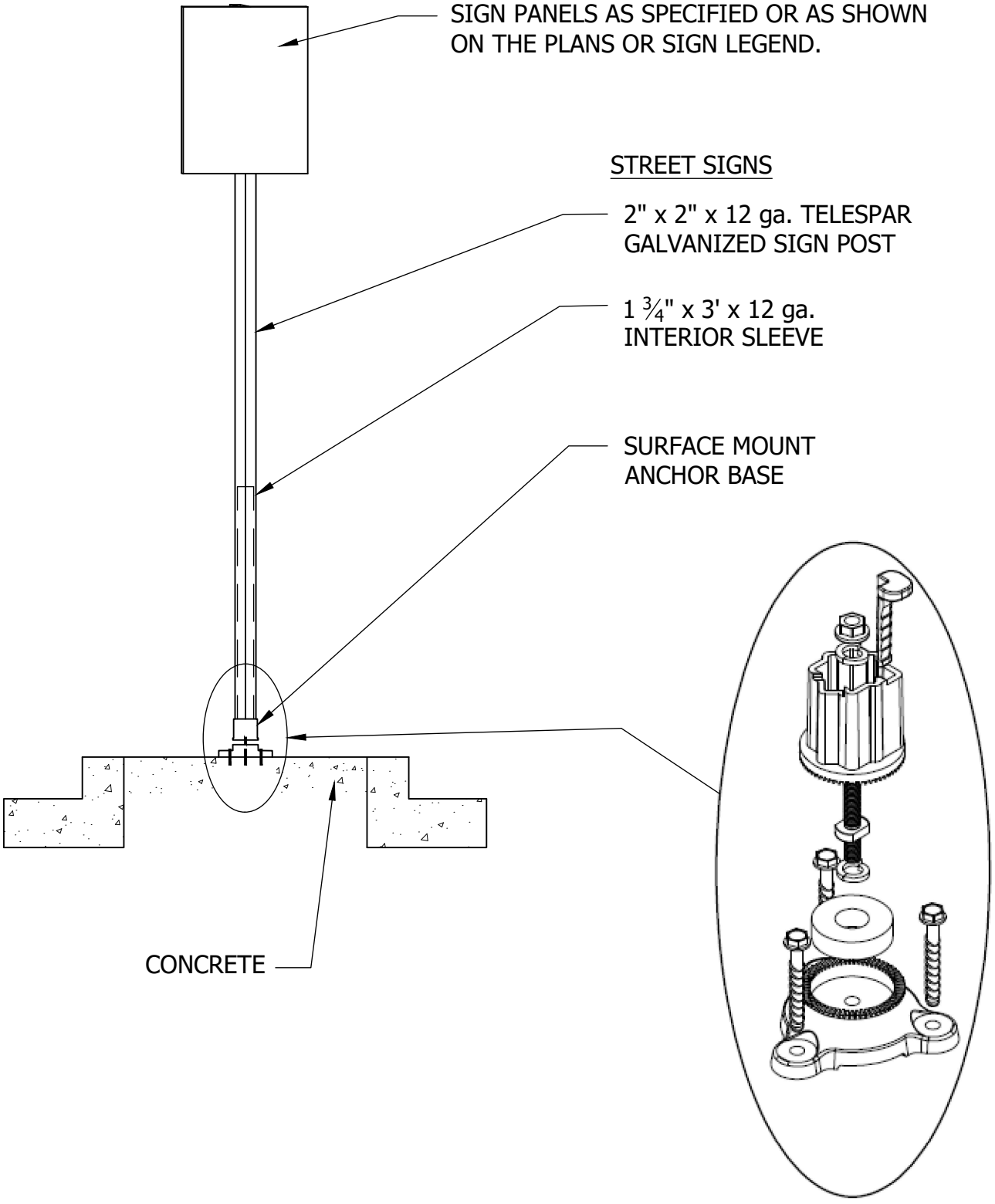


Cottage Grove
Where Pride and Prosperity Meet

# STANDARD DETAILS

TYPICAL TRAFFIC SIGN INSTALLATION MEDIAN

COTTAGE GROVE, MINNESOTA

JANUARY 2026

PLATE NO.
STR-36

48_STR36.DWG

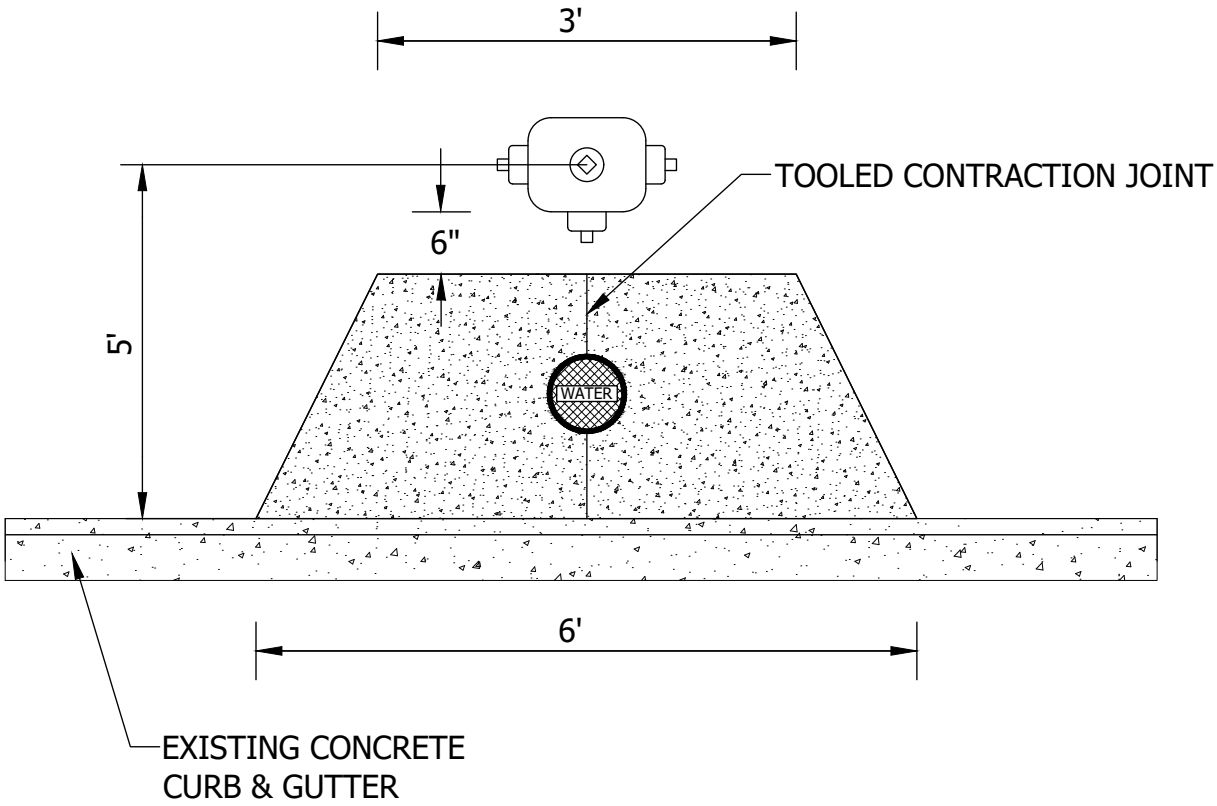


NOTE:
CONCRETE PAD SURFACE SHALL
HAVE BROOMED FINISH

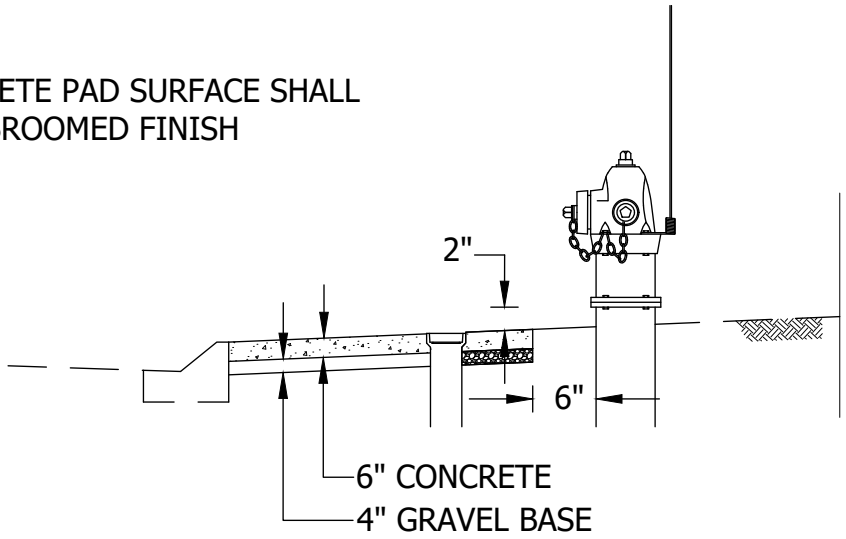


Cottage Grove
Where Pride and Prosperity Meet

STANDARD DETAILS

CONCRETE HYDRANT PAD

COTTAGE GROVE, MINNESOTA

JANUARY 2026

PLATE NO.
STR-37

48_STR37.DWG

NOTE:
IRRIGATION CONDUIT TRENCH
SEPARATE FROM ALL PRIVATE UTILITIES.

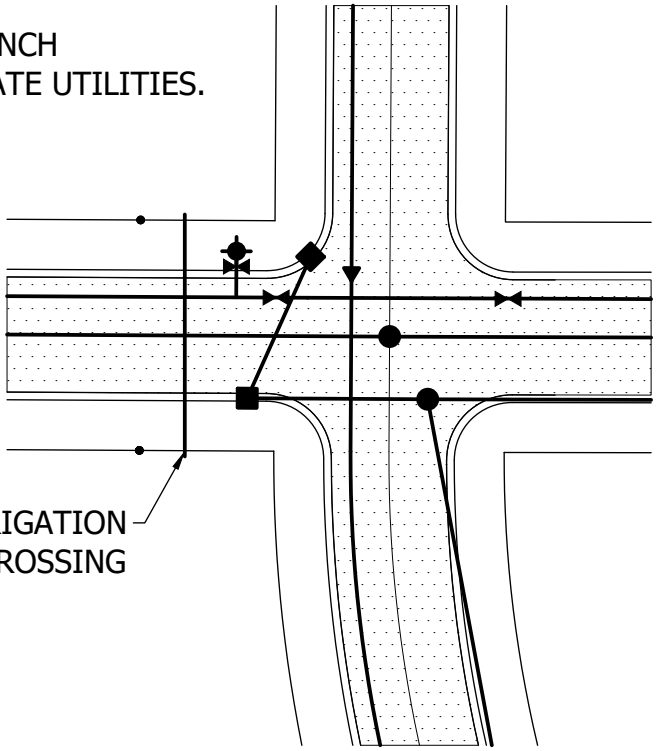


PLAN VIEW

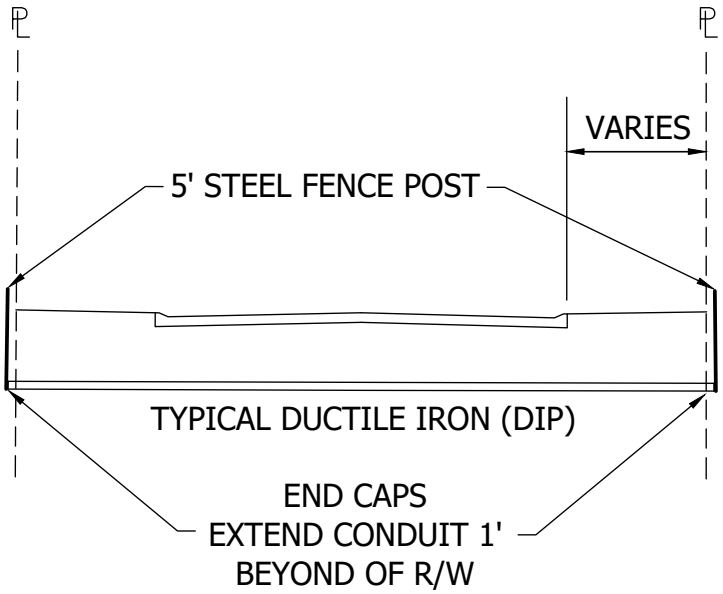


CROSS SECTION

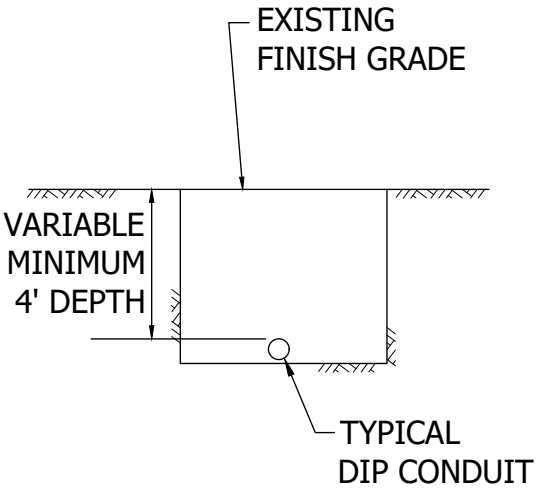


TRENCH CROSS SECTION
AT CONDUIT CROSSING

Cottage Grove
Where Pride and Prosperity Meet

# STANDARD DETAILS

DIP IRRIGATION CONDUIT CROSSING

COTTAGE GROVE, MINNESOTA

JANUARY 2026

PLATE NO.
STR-38

48_STR38.DWG

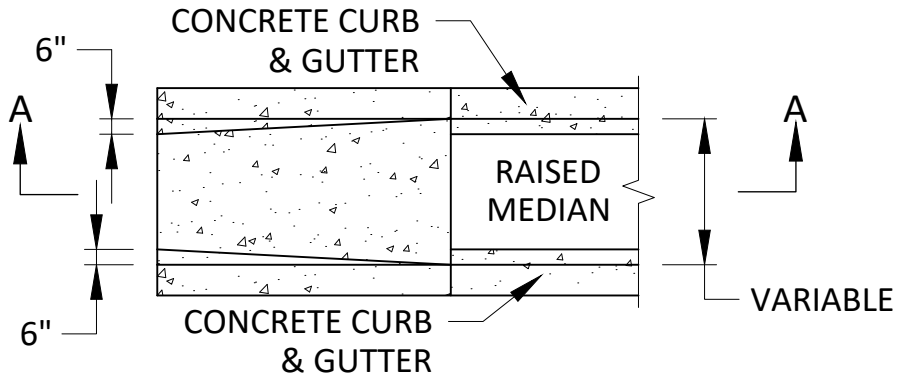


PLAN

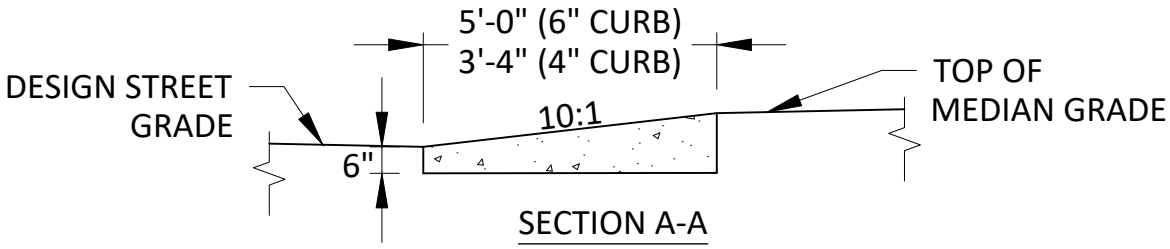


SECTION A-A

## NARROW NOSE

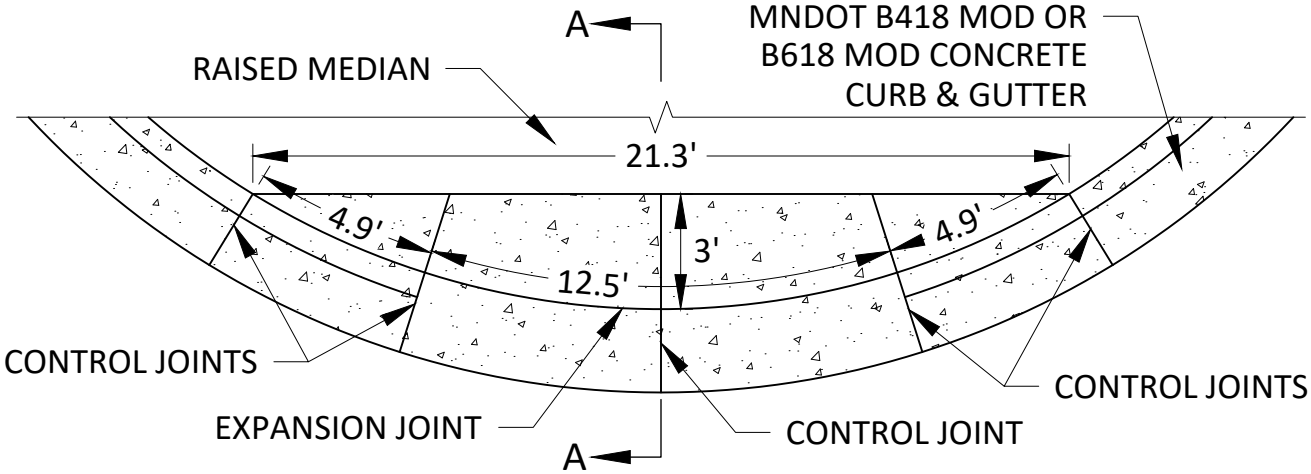


PLAN

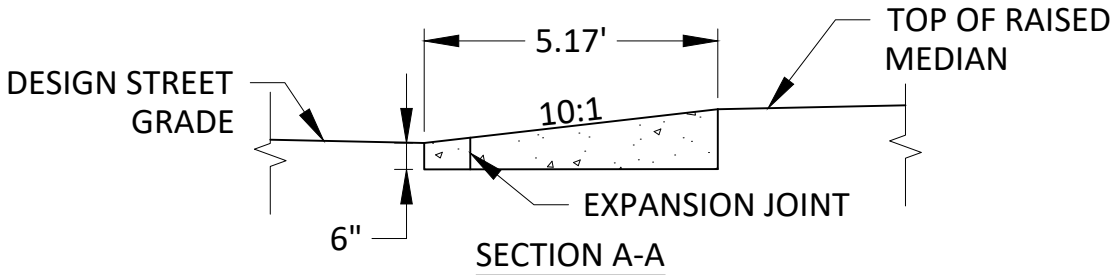


SECTION A-A

## WIDE NOSE ON 21' RADIUS RAISED MEDIAN

Cottage Grove
Where Pride and Prosperity Meet

STANDARD DETAILS

CONCRETE APPROACH NOSE DETAILS

COTTAGE GROVE, MINNESOTA

JANUARY 2026

PLATE NO.
STR-39

48_STR39.DWG

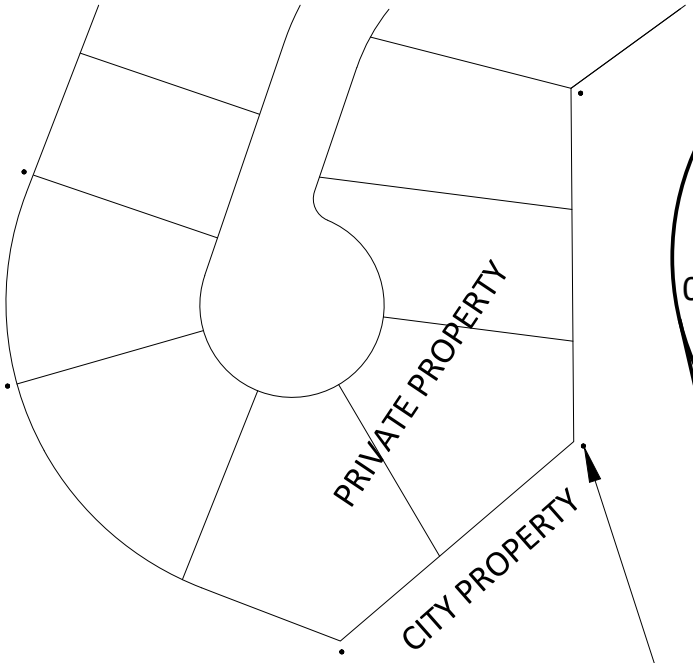


LOCATION OF MONUMENT - MAXIMUM 1'-2' FROM PROPERTY CORNER (TYP)

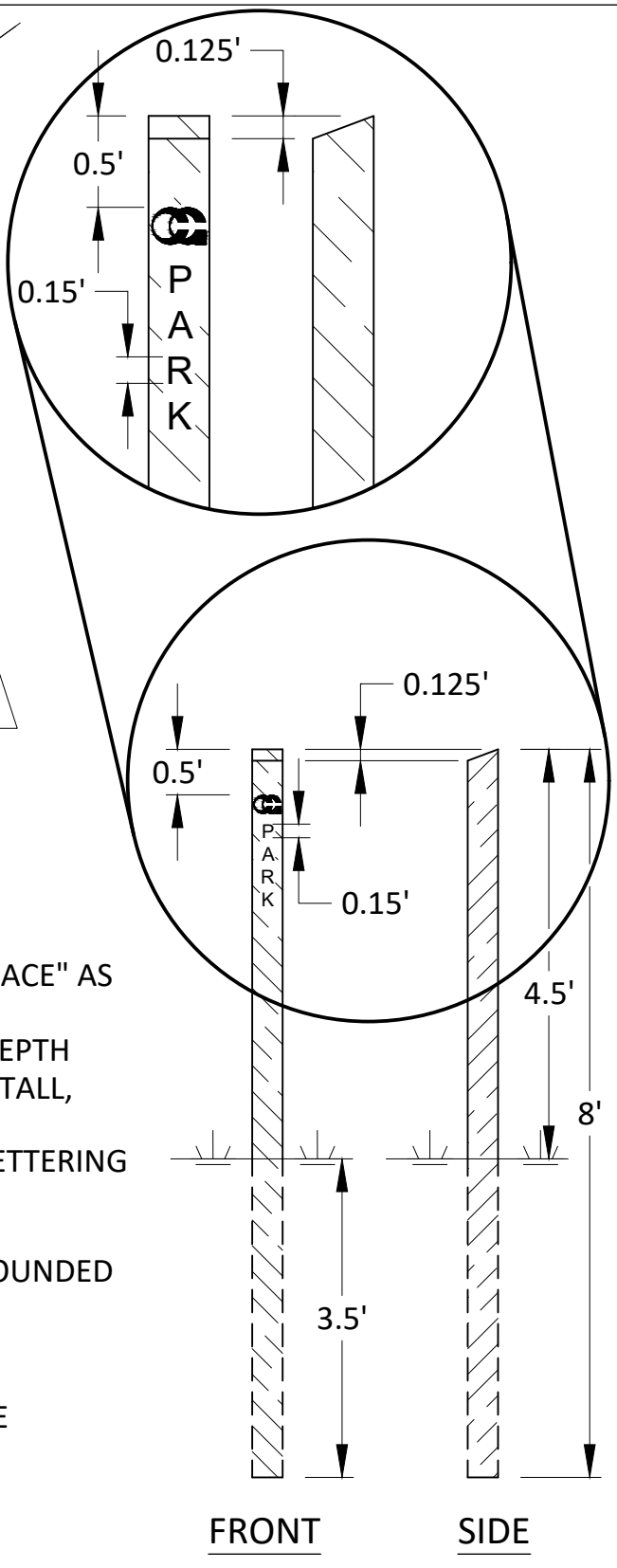


SPECIFICATIONS:

1. LETTERING
   - TYPICAL LETTERING: "PARK" OR "OPEN SPACE" AS INDICATED ON PLAN
   - LETTERING ENGRAVED INTO POST, 1/4" DEPTH
   - LETTERS TO BE ARIAL FONT, WHITE, 0.15' TALL, 0.10' SPACING BETWEEN LETTERS, 0.30' SPACING BETWEEN LOGO AND LETTERING
   - START 0.5' FROM TOP OF POST
2. POST MATERIALS
   - 4"x4" SQUARE COMPOSITE POST WITH ROUNDED EDGES AND CORNERS
   - FOREST GREEN
3. POST INSTALLATION
   - PLACED WITH LETTERING FACING PRIVATE PROPERTY

Cottage Grove
Where Pride and Prosperity Meet

STANDARD DETAILS

CITY MONUMENT POST

COTTAGE GROVE, MINNESOTA

JANUARY 2026

PLATE NO.
STR-40

48_STR40.DWG

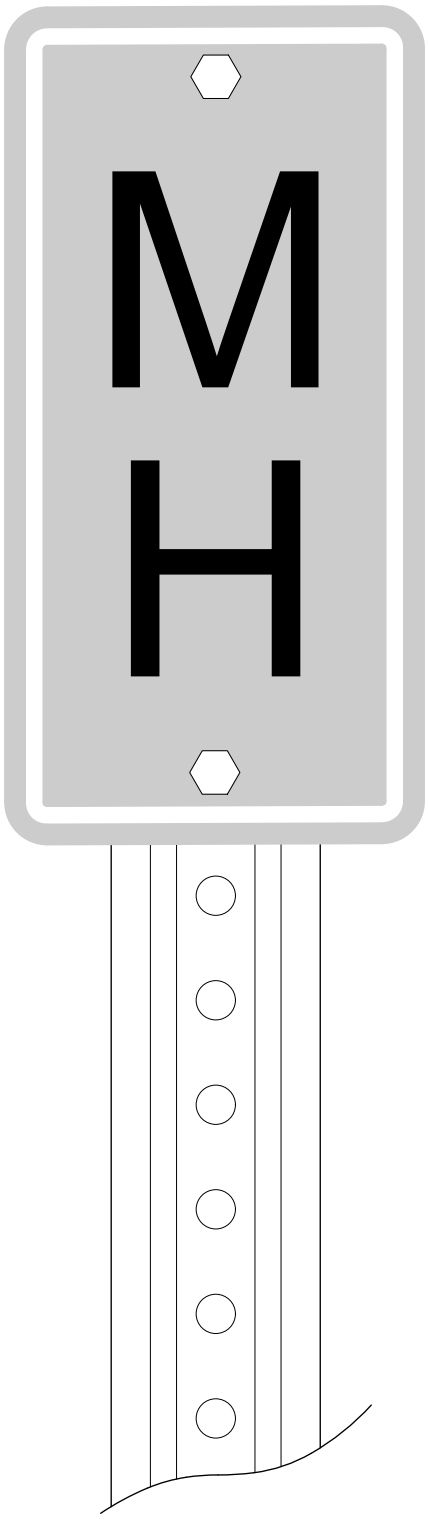


NOTES:

1. 6"x12" SIGN PANEL:
   - 1.1. MH FOR SANITARY - WHITE LETTERS ON GREEN HIP SHEETING WITH WHITE BORDER.
   - 1.2. SW FOR STORM SEWER - WHITE LETTERS ON GREEN HIP SHEETING WITH WHITE BORDER.
   - 1.1. GV FOR WATER MAIN - WHITE LETTERS ON BLUE HIP SHEETING WITH WHITE BORDER
2. U-CHANNEL GALVANIZED POST, MINIMUM 3 LB/FT 6'-6" LONG.
3. REQUIRED FOR STRUCTURES LOCATED IN NON-MAINTAINED AREAS AS DIRECTED BY ENGINEER.

Cottage Grove
Where Pride and Prosperity Meet

STANDARD DETAILS

STRUCTURE MARKER SIGN

COTTAGE GROVE, MINNESOTA

JANUARY 2026

PLATE NO.
STR-41

48_STR41.DWG

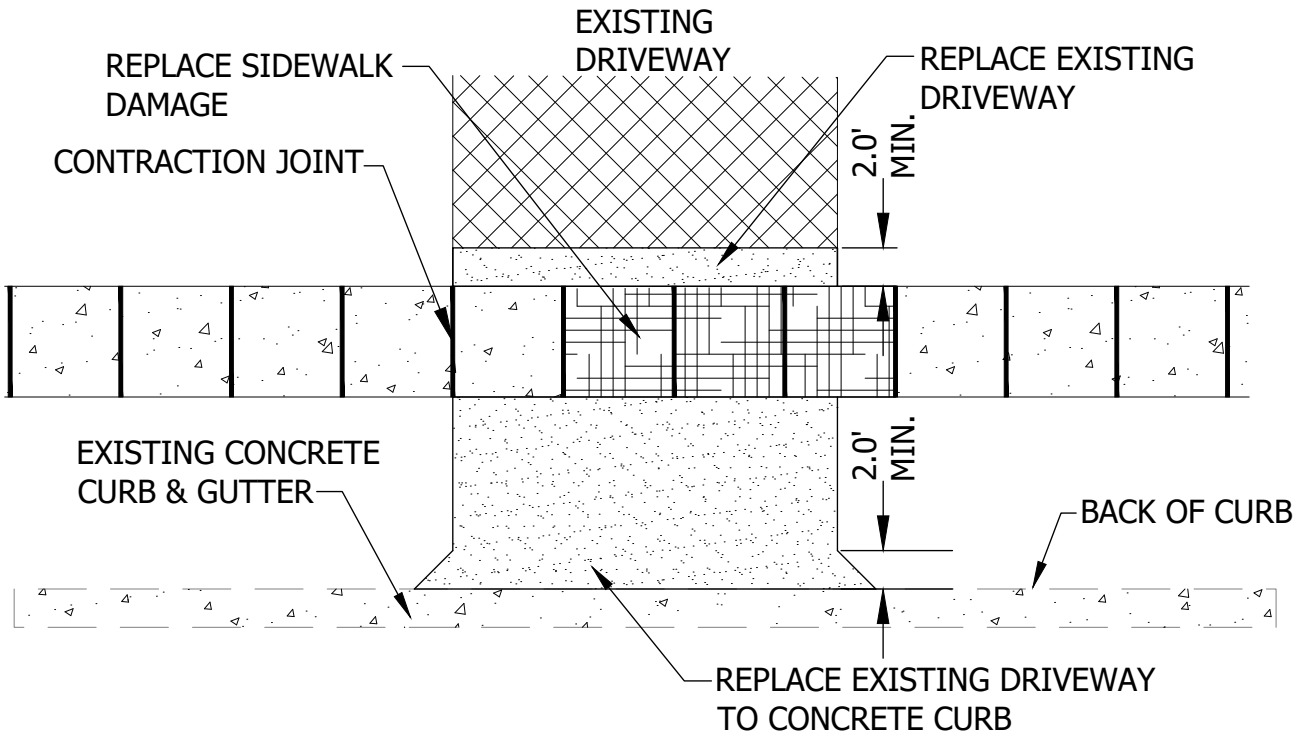


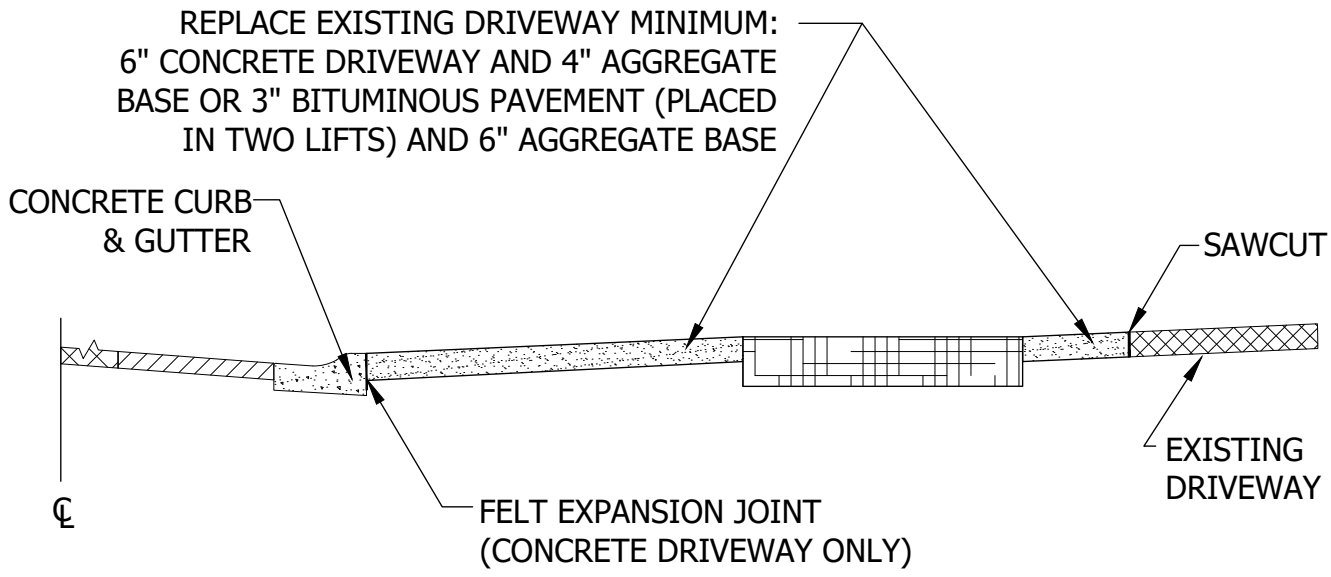


SECTION

Cottage Grove
Where Pride and Prosperity Meet

# STANDARD DETAILS

CONCRETE SIDEWALK REPLACEMENT AT DRIVEWAY LOCATION

COTTAGE GROVE, MINNESOTA

JANUARY 2026

PLATE NO.
STR-42

48_STR42.DWG

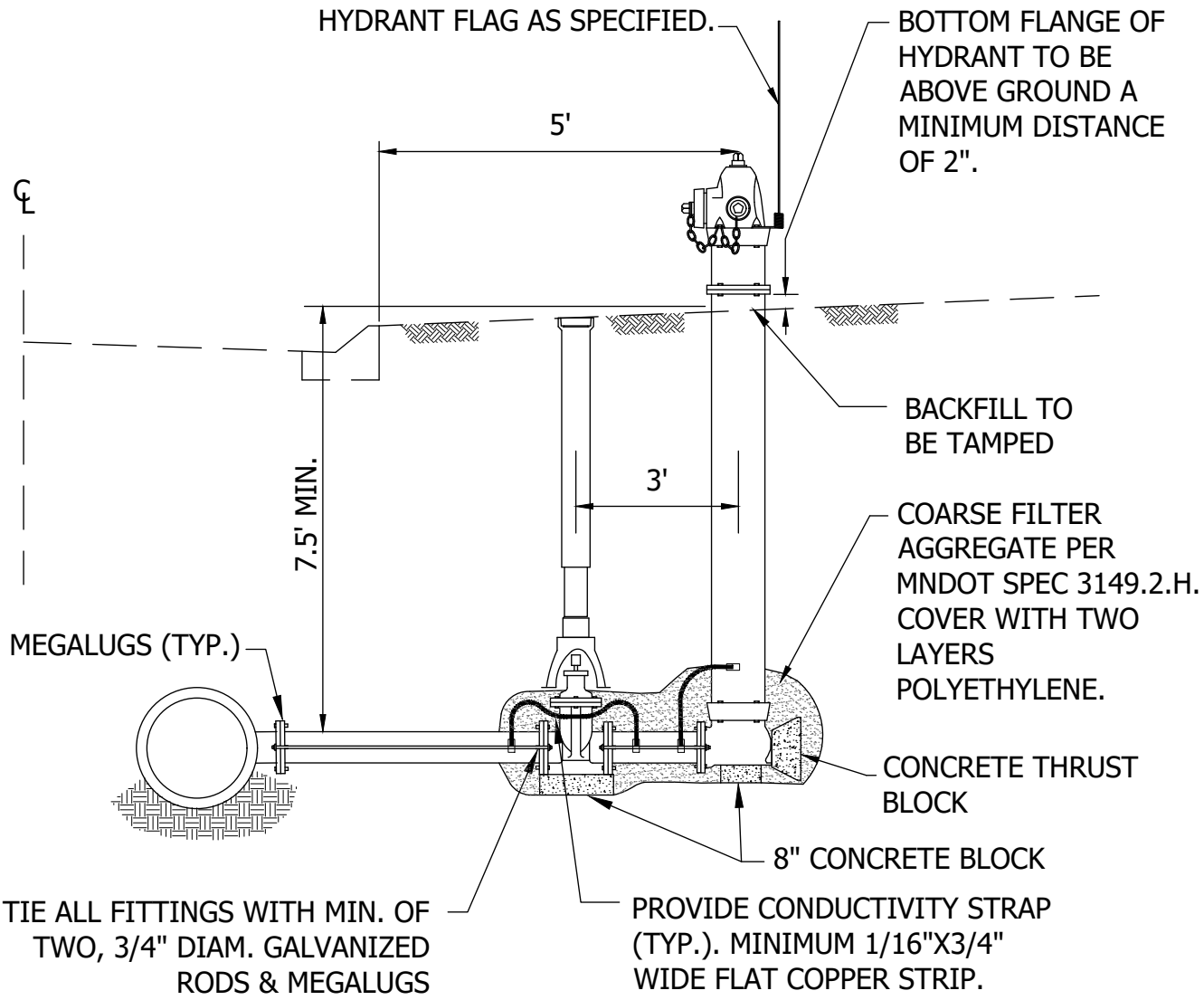


Cottage Grove
Where Pride and Prosperity Meet

# STANDARD DETAILS

HYDRANT DETAIL

COTTAGE GROVE, MINNESOTA

JANUARY 2026

PLATE NO.
WAT-1

48_WAT1.DWG

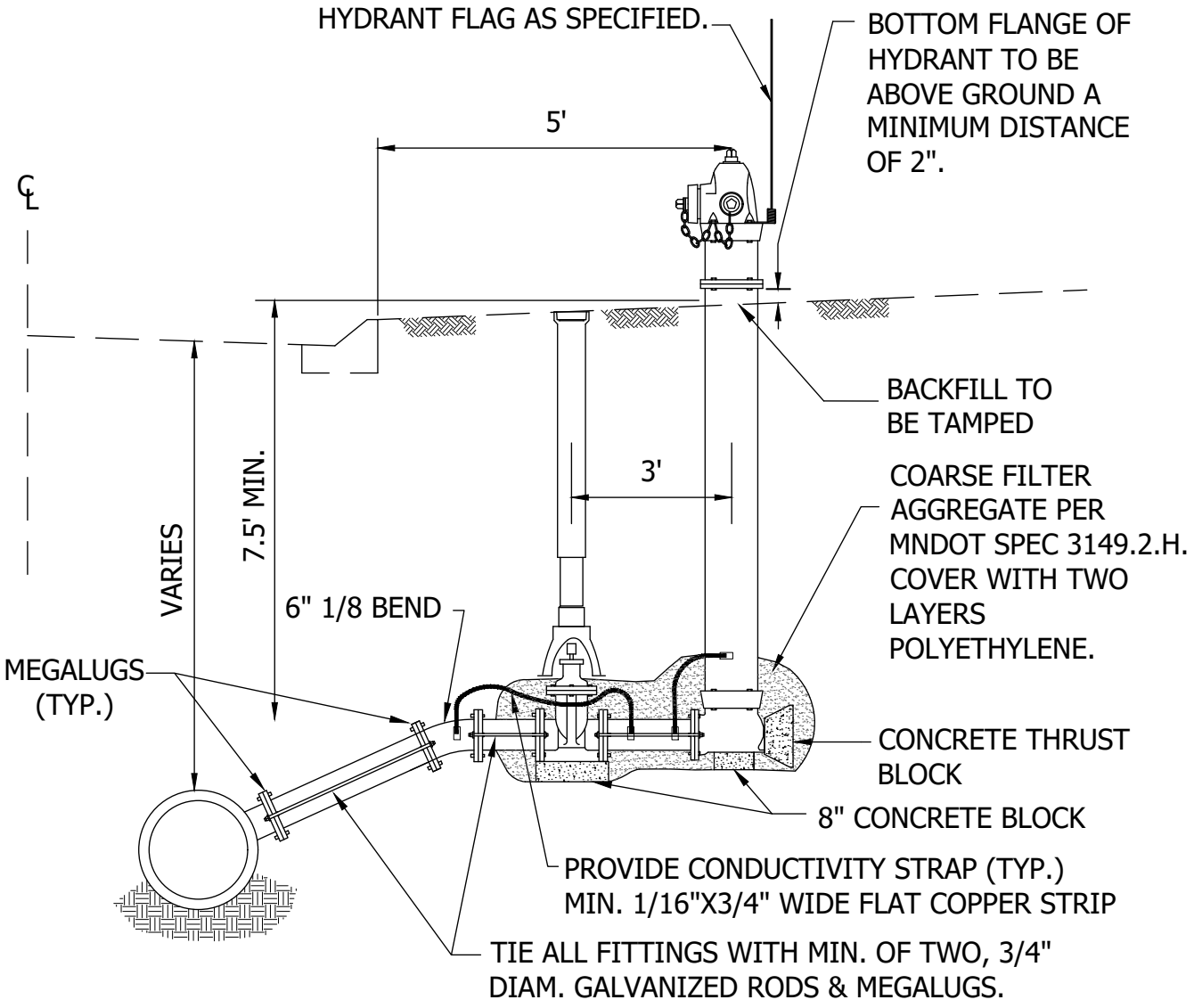


Cottage Grove
Where Pride and Prosperity Meet

## STANDARD DETAILS

HYDRANT DETAIL WITH VERTICAL BEND

COTTAGE GROVE, MINNESOTA

JANUARY 2026

PLATE NO.
WAT-2

48_WAT2.DWG

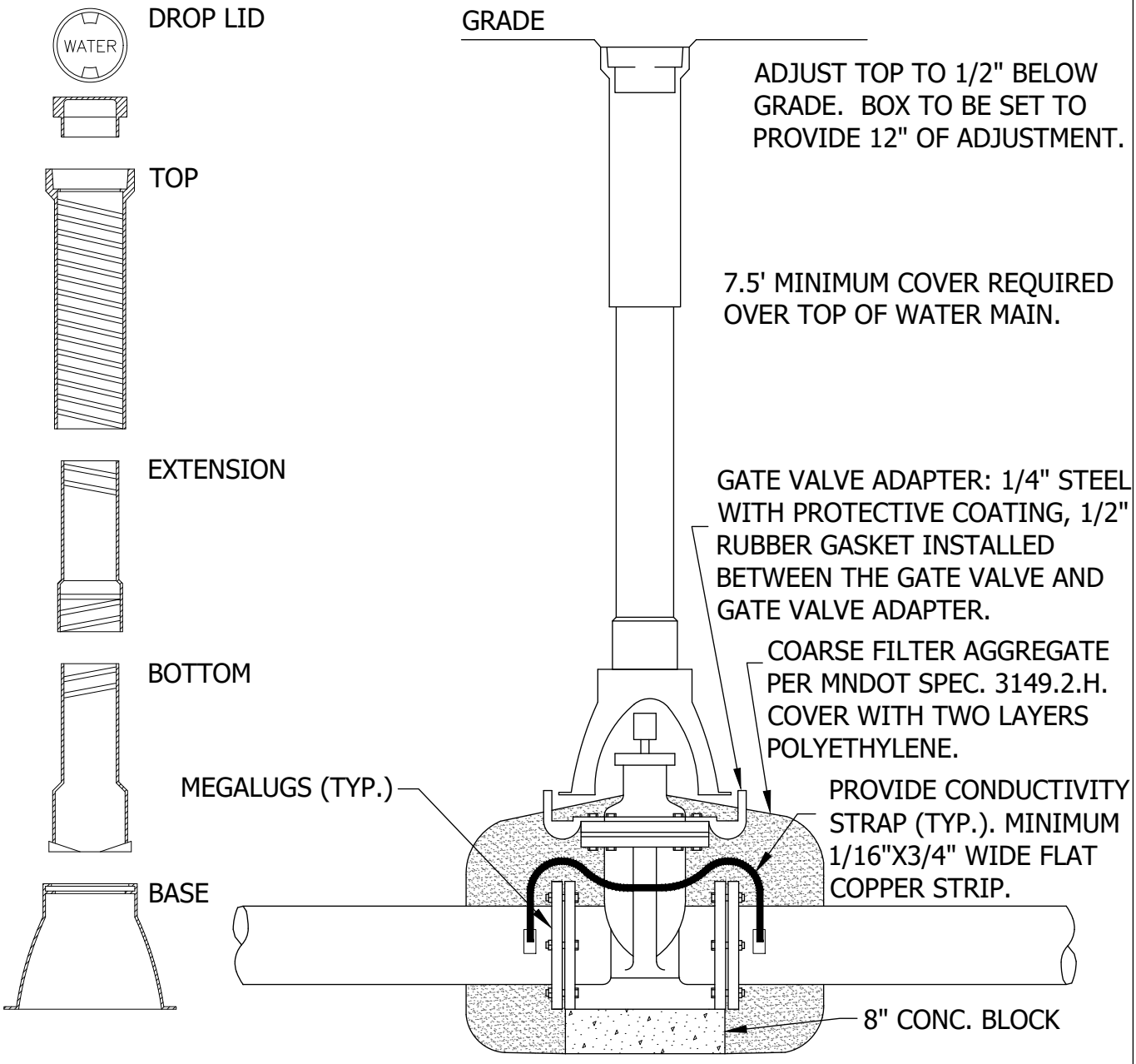


Cottage Grove
Where Pride and Prosperity Meet

# STANDARD DETAILS

GATE VALVE AND BOX INSTALLATION

COTTAGE GROVE, MINNESOTA

JANUARY 2026

PLATE NO.
WAT-3

48_WAT3.DWG

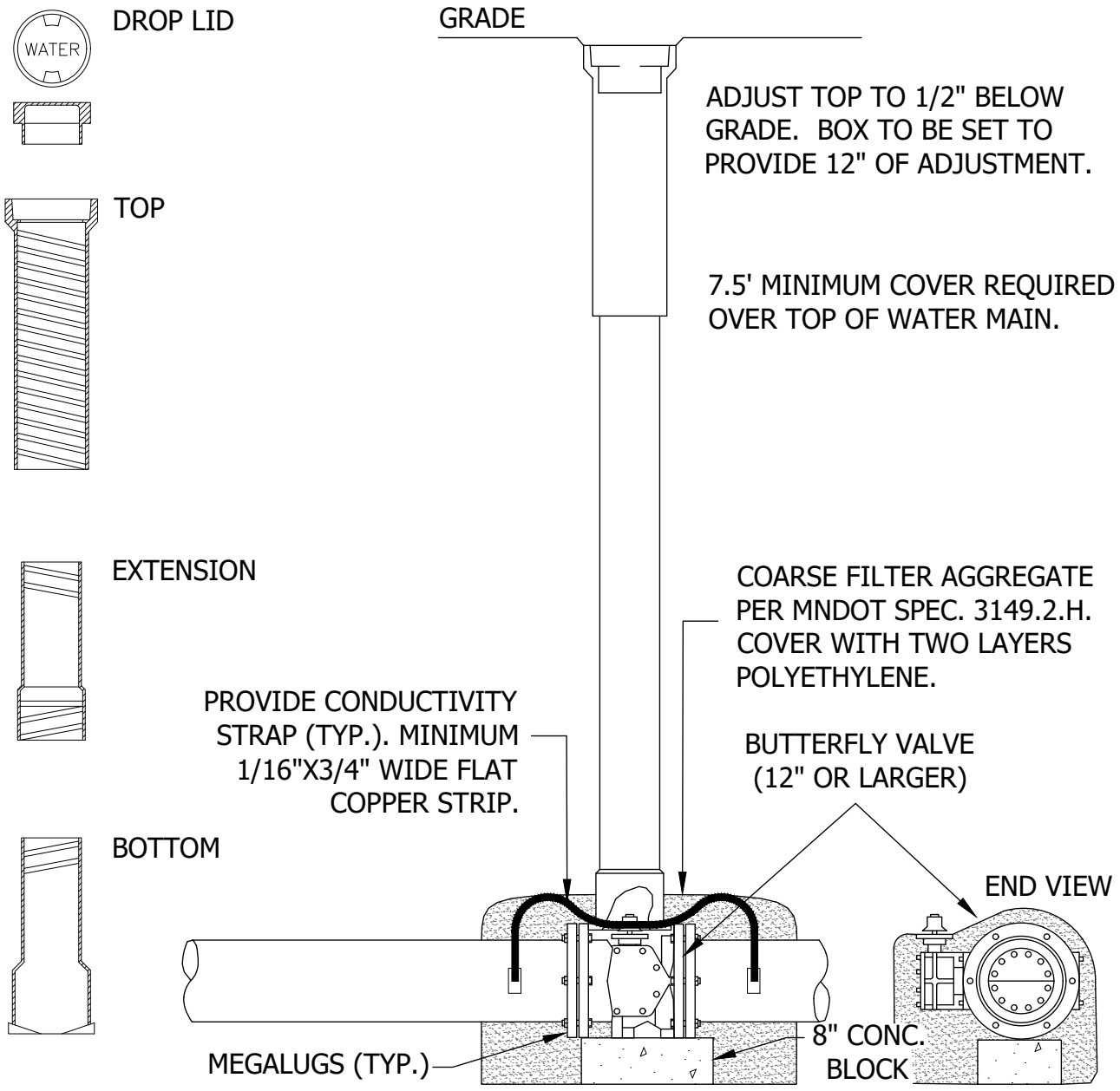


Cottage Grove
Where Pride and Prosperity Meet

# STANDARD DETAILS

BUTTERFLY VALVE AND BOX INSTALLATION

COTTAGE GROVE, MINNESOTA

JANUARY 2026

PLATE NO.
WAT-4

48_WAT4.DWG

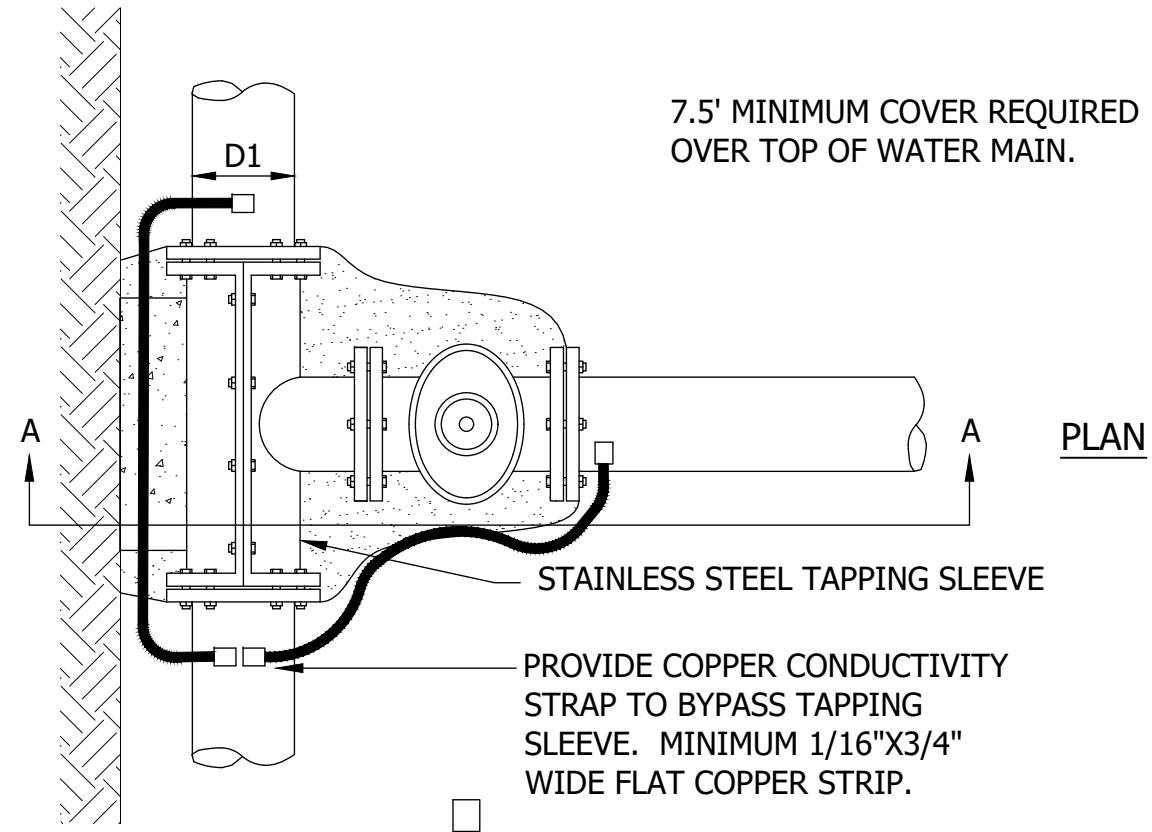


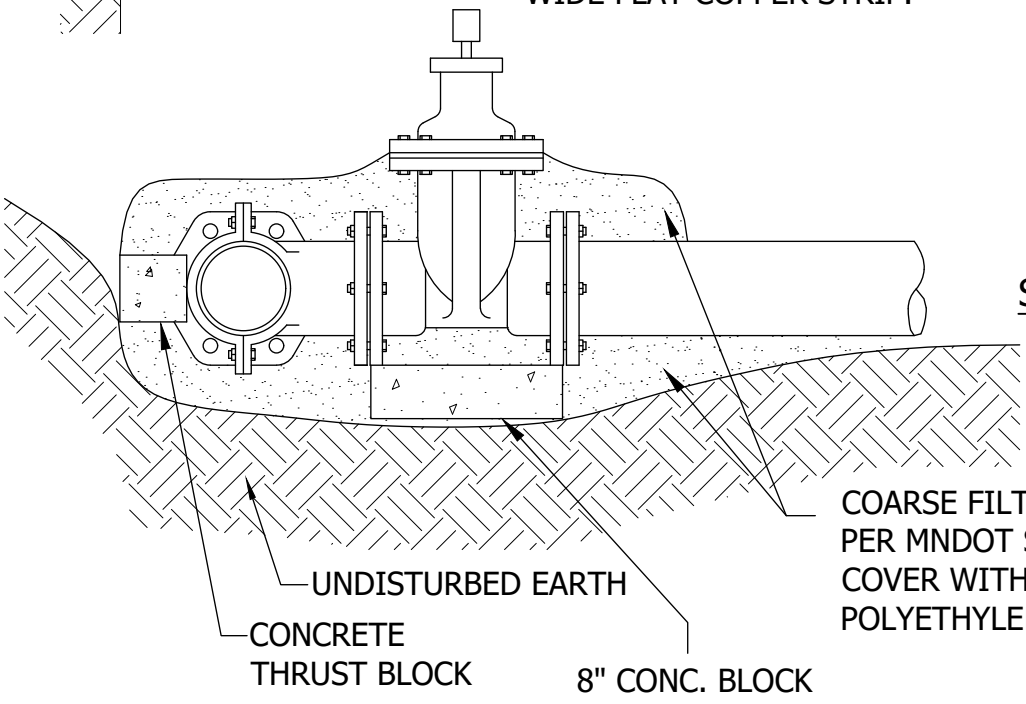


Cottage Grove
Where Pride and Prosperity Meet

# STANDARD DETAILS

WATER MAIN WET TAP

COTTAGE GROVE, MINNESOTA

JANUARY 2026

PLATE NO.
WAT-5

48_WAT5.DWG

NOTES:

1. SHAPE OF BACK OF BUTTRESS MAY VARY AS LONG AS POURED AGAINST FIRM UNDISTURBED EARTH.
2. DIMENSION C1,C2,C3 SHOULD BE LARGE ENOUGH TO MAKE ANGLE θ EQUAL TO OR LARGER THAN 45°.
3. DIMENSION A1,A2,A3 SHOULD BE AS LARGE AS POSSIBLE WITHOUT INTERFERING WITH MJ BOLTS.
4. θ = 45° MINIMUM.
5. PLACE POLYETHYLENE BETWEEN CONCRETE & PIPE.
6. PRECAST CONCRETE BLOCK CAN BE USED FOR BLOCKING ON 6" AND 8" FITTINGS.

| BUTTRESS DIMENSIONS | | | | | | |
|---|---|---|---|---|---|---|
| PIPE | 22 1/2° BEND | | 45° BEND | | 90° BEND | |
| SIZE | $B_1$ | $D_1$ | $B_2$ | $D_2$ | $B_3$ | $D_3$ |
| 6" | -- | -- | -- | -- | 2'-1" | 1'-6" |
| 8" | -- | -- | -- | -- | 2'-8" | 2'-0" |
| 12" | 1'-10" | 1'-10" | 3'-4" | 2'-0" | 4'-9" | 2'-6" |
| 16" | 3'-0" | 2'-0" | 3'-10" | 3'-0" | 6'-2" | 3'-6" |
| 20" | 3'-6" | 2'-8" | 5'-6' | 3'-4" | 8'-4" | 4'-0" |
| 24" | 4'-4" | 3'-0" | 6'-10" | 3'-10" | 9'-8" | 5'-0" |
| 30" | -- | -- | 9'-3" | 6'-0" | 17'-0" | 6'-0" |

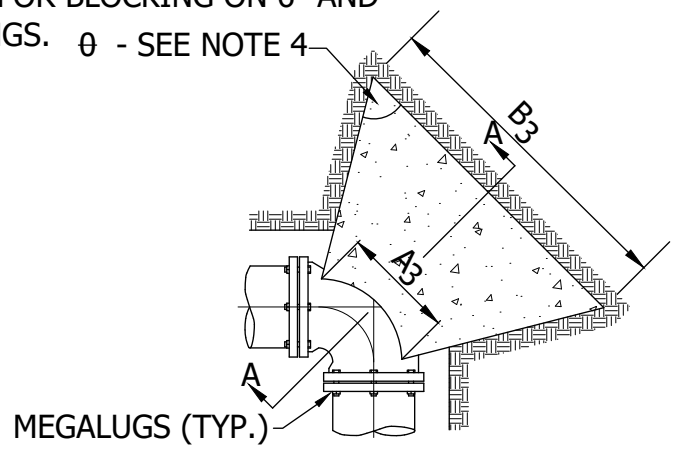


PLAN 90° BENDS

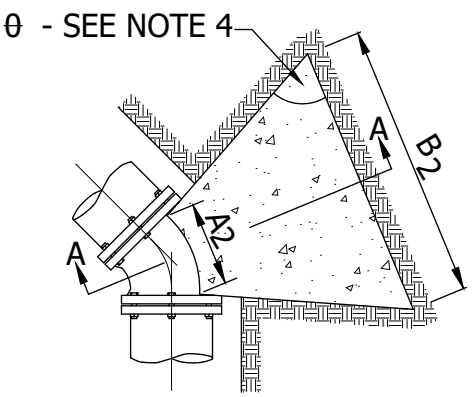


PLAN 45° BENDS

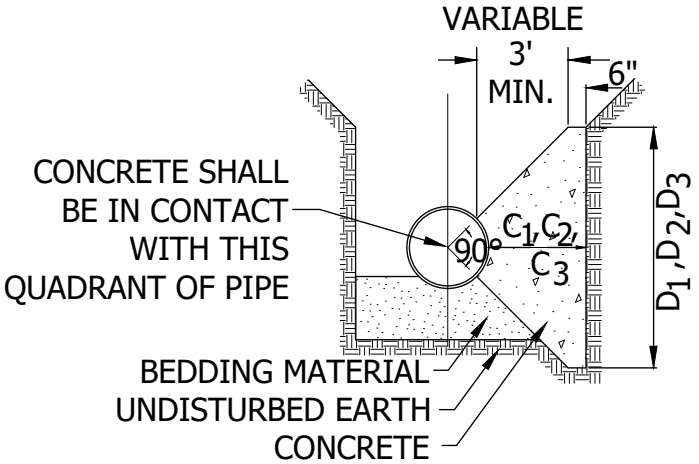


SECTION A-A

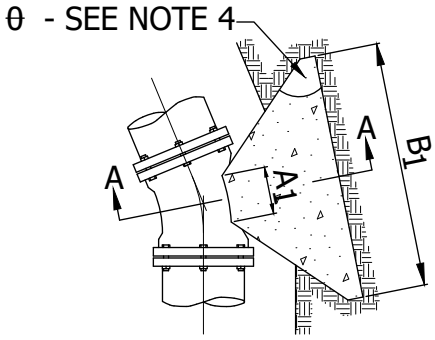


PLAN 22 1/2° BENDS

Cottage Grove

Where Pride and Prosperity Meet

STANDARD DETAILS

CONCRETE THRUST BLOCKING

COTTAGE GROVE, MINNESOTA

JANUARY 2026

PLATE NO.

WAT-6

48_WAT6.DWG

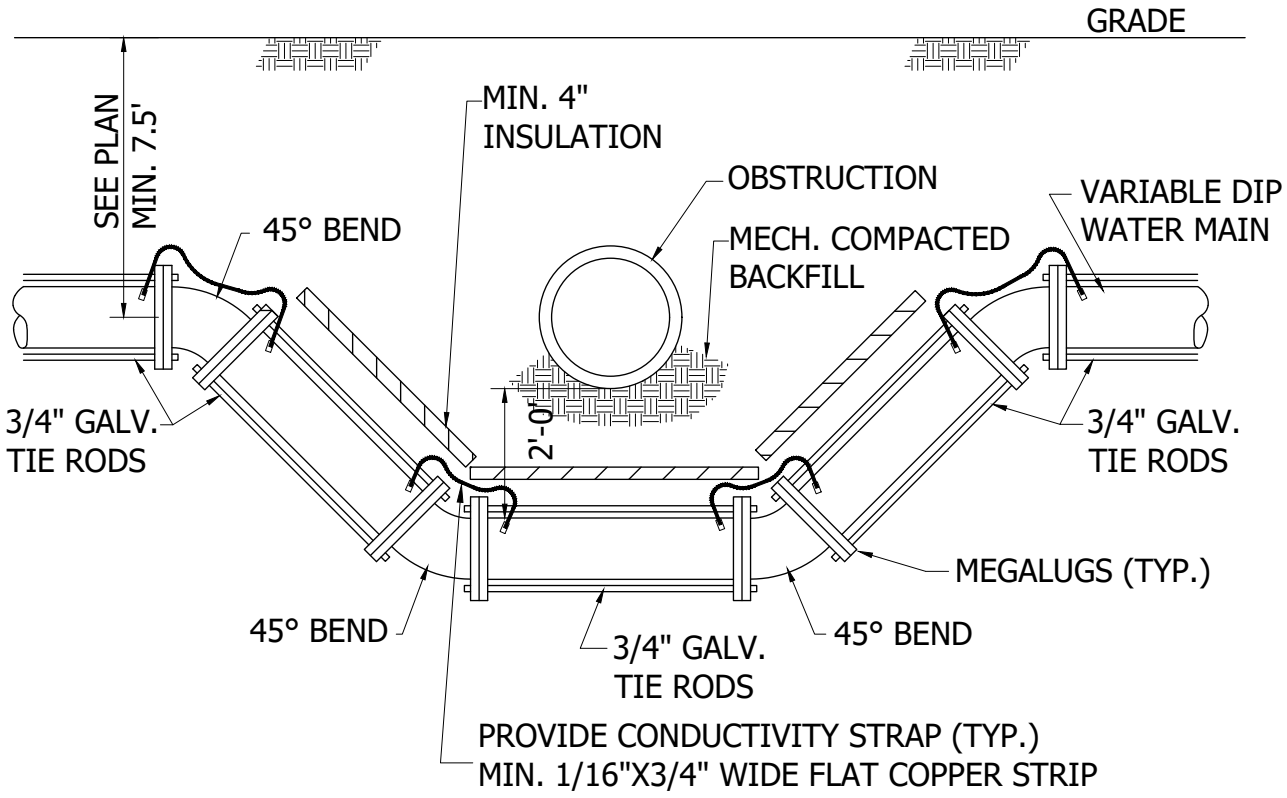


Cottage Grove
Where Pride and Prosperity Meet

# STANDARD DETAILS

WATER MAIN OFFSET

COTTAGE GROVE, MINNESOTA

JANUARY 2026

PLATE NO.
WAT-7

48_WAT7.DWG

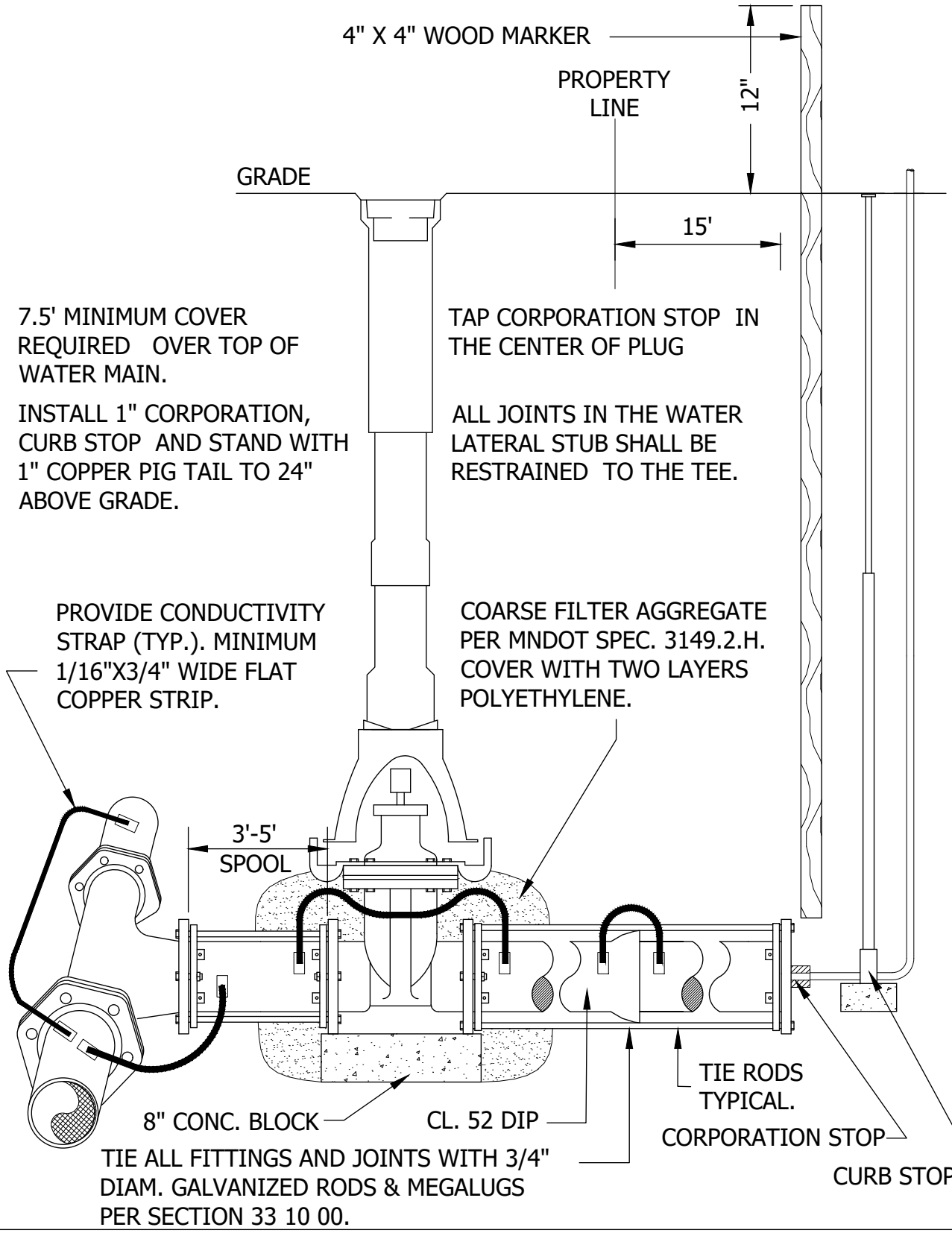


Cottage Grove
Where Pride and Prosperity Meet

# STANDARD DETAILS

DIP SERVICE OR DEAD END LINE

COTTAGE GROVE, MINNESOTA

JANUARY 2026

PLATE NO.
WAT-8

48_WAT8.DWG

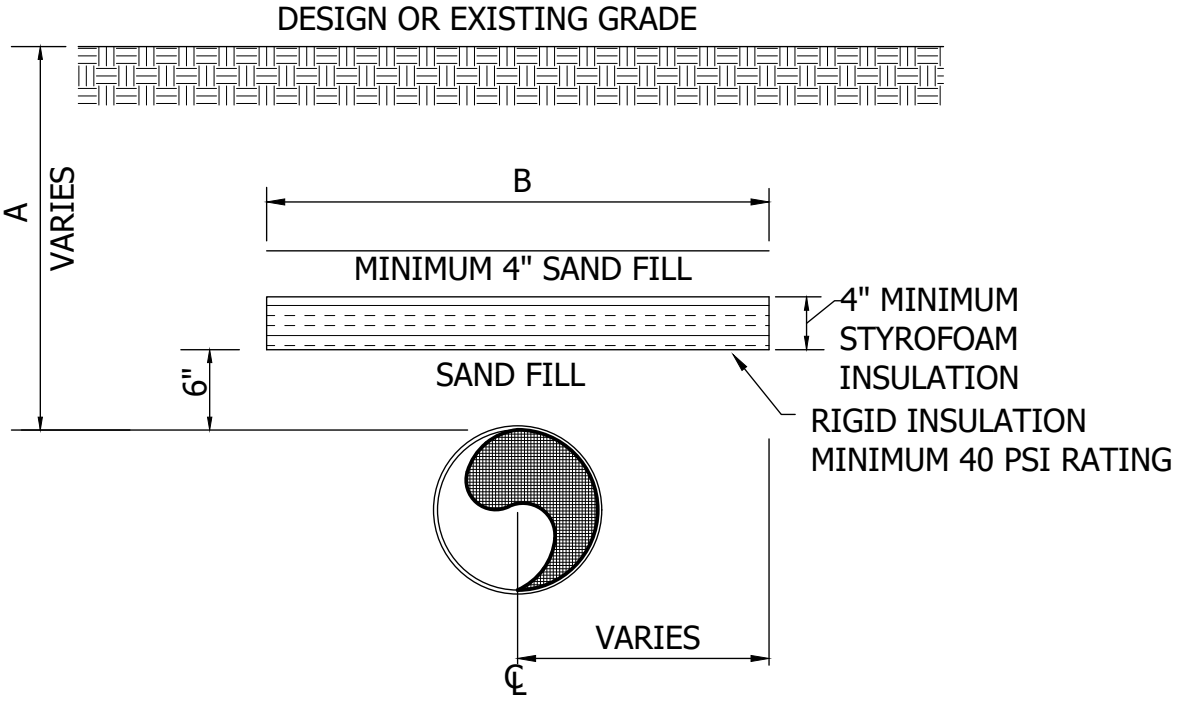


PIPE SHALL BE CENTERED UNDER INSULATION UNLESS OTHERWISE SPECIFIED.

| COVER OVER PIPE - A | WIDTH OF INSULATING BOARD - B |
|---|---|
| 2' | 11' |
| 3' | 9' |
| 4' | 7' |
| 5' | 5' |
| 6' | 3' |

Cottage Grove
Where Pride and Prosperity Meet

STANDARD DETAILS

INSULATION DETAIL

COTTAGE GROVE, MINNESOTA

JANUARY 2026

PLATE NO.
WAT-9

48_WAT9.DWG

# City Council Action Request

# 7.S.

| | |
|---|---|
| **Meeting Date** | 3/4/2026 |
| **Department** | Engineering |
| **Agenda Category** | Action Item |
| **Title** | 2026 Pavement Management - Approve Plans & Specifications and Authorize Bidding |
| **Staff Recommendation** | Adopt Resolution 2026-021 approving the plans and specifications and authorizing bidding for the 2026 Pavement Management Project. |
| **Budget Implication** | $3,767,883.66 - Assessments, Utility Funds, General Levy |

**Attachments**

| | |
|---|---|
| 1. | 2026PMP Approve P&S and Authorize Bidding Memo |
| 2. | 2026PMP Approve P&S and Authorize Bidding Resolution |
| 3. | 2026-02-25 2026 Pavement Management Plans |

**To:** Honorable Mayor and City Council
Jennifer Levitt, City Administrator

**From:** Genevieve Tester, EIT, Graduate Engineer

**Date:** February 24, 2026

**Re:** 2026 Pavement Management – Approve Plans & Specifications and Authorize Bidding

---

## Background

The City's 5-year Capital Improvement Plan identifies several residential streets within Thompson Grove Estates 11th Addition, Woodridge Park Addition, and Pinetree Pond Townhouses for rehabilitation in 2026. The proposed project area spans Inwood Avenue to Jamaica Avenue and Hillside Trail to 90th Street. On December 18, 2024, the City Council authorized a feasibility report for the 2026 Pavement Management Project. The City Council approved the report on December 3, 2025. The Feasibility Report allows staff to evaluate areas in further detail to better understand the current state, needs, and economic feasibility of the proposed areas.

The following streets are included in the 2026 Pavement Management project:

- Hillside Trail from Isle Avenue to Jamaica Avenue
- Ira Avenue from 88th Street to Ironwood Avenue
- Irish Avenue Court from 88th Street to cul-de-sac (8616-8656)
- Ironwood Avenue from Inwood Avenue to 90th Street
- Isle Avenue from 88th Street to Hillside Trail
- Isle Avenue from Isle Avenue to cul-de-sac (8657-8701)
- Ivywood Avenue from 88th Street to Hillside Trail
- 88th Street from Inwood Avenue to Ivywood Avenue
- 88th Street from Ivywood Avenue to cul-de-sac (8803-8815)
- 90th Street from Inwood Avenue to Jamaica Avenue

The roadways listed above were originally constructed 48-57 years ago. Streets within Thompson Grove Estates 11th Addition were reclaimed and reconstructed in 1998. Streets within Woodridge Park underwent a mill and overlay in 1997 and 1998. Streets within Pinetree Pond Townhouses were reclaimed and paved in 1971. 90th Street was last rehabilitated in 2001. A thin overlay was applied in 2018 intended to extend the life of the existing streets.

As a part of the Feasibility Report process, the roadways were examined through a combination of pavement coring, ground penetrating radar "GPR" testing, visual inspections, and utility assessments. Pavement cores were taken at eight locations to measure asphalt and aggregate base thickness and evaluate material condition; the cores revealed widespread asphalt stripping. GPR was used to provide a continuous profile of pavement and base thickness across the streets;

GPR confirmed undesirable variability in structure. Public Works also conducted visual inspections and reviewed maintenance history, noting edge failures, cracking, and deterioration of the thin overlay that is now eight years old. The defects noted on road surfaces would typically reflect through within a year if a mill and overlay project were completed at this time. Approximately 70% of the curbs and gutters are in poor condition.

Sanitary and storm sewer systems were televised and inspected for root intrusion, cracks, and structural issues. The sanitary sewer was found to have root intrusion in the multifamily area between 88th Street and 90th Street resulting in cracking and service blockages. Sewer lining is recommended in this area. The storm sewer was found to be in fair condition. Some structures require replacement, crack repairs, or adjusting rings. Watermain valves were checked for operational integrity and corrosion, they were found to be in generally good condition with minor value adjustments needed. Hydrants will be reconditioned and repainted as necessary and concrete hydrant pads will be installed. Additionally, the condition of the street light infrastructure was evaluated, and some improvements are proposed.

A special benefit appraisal was completed in accordance with the City's policy for those properties with direct access to the streets included in the project area. The preparation of plans and specifications was authorized by the City Council on December 3, 2025. A neighborhood meeting was held on December 1, 2025 to discuss the various improvements proposed, the findings of the special benefit appraisal, and the proposed assessments. The Public Hearing for the project was held on January 7, 2026 and the project was ordered.

## Discussion

**Summary of Road and Infrastructure Improvements:** The rehabilitation method proposed for the residential roadways in the project area is to remove the existing asphalt surface and replace it with a new surface. This new surface will consist of two lifts of bituminous totaling 3.5 inches of pavement. Full curb replacement throughout the area will also be completed due to age and deterioration. Finally, utility improvements for sanitary sewer, water, stormwater, and lighting systems will also be included. The total estimated project cost of road and infrastructure improvements for the neighborhood is $3,767,883.66. This number encompasses a 25% allowance that includes indirect costs associated with the project (engineering, administrative, financing, and legal) and a 7% contingency.

**Hillside Trail Sidewalk:** In addition to the residential streets slated for rehabilitation, a sidewalk is proposed along the south side of Hillside Trail from Jamaica Avenue to Woodridge Park. This improvement addresses a missing link in the City's pedestrian network and is an area of interest for proactive pedestrian safety. The concept was previously discussed at the Public Services Commission meetings on May 20, 2024, and January 27, 2025. The sidewalk will be constructed as a part of the pavement management project but *not* assessed to the residents.

**Assessments:** Assessments for this project will be based on the "Infrastructure Maintenance Task Force Special Assessment Policy for Public Improvements," dated September 30, 2005, revised October 31, 2023. The Feasibility Report recommends that all residential, religious land use, school land use, and commercial land use properties in the project area, be assessed. No assessment will exceed the special benefit appraisal.

The proposed assessment for the improvements listed above is estimated at $7,997.32 per residential building lot equivalent (RBLE). This amount exceeds the special benefit appraisal of $7,100.00 per RBLE, therefore, the assessment for single-family homes will be capped at $7,100.00. For multifamily units, the special benefit appraisal is $2,700.00, compared to the policy-based calculation of $4,798.39 (0.6 RBLE). Additional assessment amounts, per the assessment roll, are $23,500.00 for religious institutions, $29,000.00 for school institutions, and $37,700.00 for commercial properties.

**Plans and Specifications:** Plans and specifications have been prepared in accordance with City standards and specifications. The engineer's estimate for the construction of the improvements included in the base bid is $3,000,000.00. The costs of the bid items outlined for the specific improvements correspond with the feasibility report.

**Bidding**: City staff recommends that Council authorize bidding of the project. The bid date will be set by City staff. Council authorization of a specific bid date is not required by state statute.

## Recommendation

It is recommended the City Council adopt Resolution 2026-021 approving the plans and specifications and authorizing bidding for the 2026 Pavement Management Project.

CITY OF COTTAGE GROVE, MINNESOTA
CITY COUNCIL
RESOLUTION 2026-021

**RESOLUTION APPROVING THE PLANS AND SPECIFICATIONS AND AUTHORIZING BIDDING FOR THE 2026 PAVEMENT MANAGEMENT PROJECT**

WHEREAS, plans and specifications have been prepared in accordance with the City Standards and Specifications for the 2026 Pavement Management Project; and

WHEREAS, a bid date will be set by City staff; and

WHEREAS, the City Engineer has presented such plans and specifications to the City Council for approval.

NOW, THEREFORE, BE IT RESOLVED, by the City Council of the City of Cottage Grove, County of Washington, State of Minnesota, approves the plans and specifications and authorizes bidding for the 2026 Pavement Management Project.

Passed this 4th day of March 2026.

_____
Myron Bailey, Mayor

Attest:

_____
Tamara Anderson, City Clerk

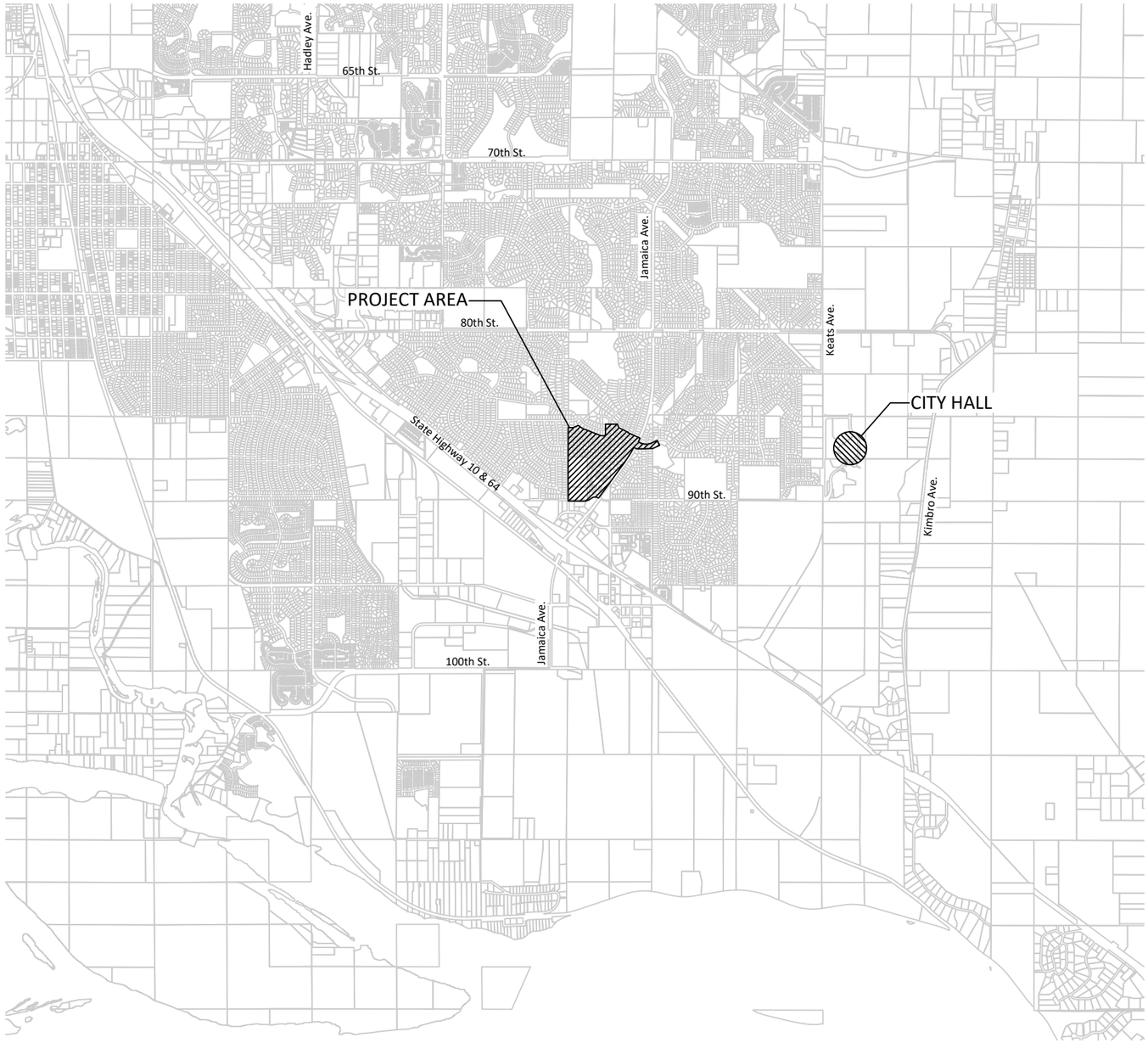


Cottage Grove
Where Pride and Prosperity Meet

# 2026 PAVEMENT MANAGEMENT PROJECT

| SHEET NO. | DESCRIPTION |
|---|---|
| G0.01 | TITLE SHEET |
| G0.02 | LEGEND |
| G2.01 | LOCATION PLAN |
| C1.01 | TYPICAL SECTION DETAILS |
| C1.02 - C1.07 | MNDOT PEDESTRIAN RAMP DETAILS |
| C1.10 - C1.10 | STANDARD DETAIL PLATES |
| C1.11 | ELECTRICAL CABINET DETAIL |
| C2.01 | EROSION CONTROL PLAN |
| C2.02 - C2.04 | SWPPP |
| C4.01 - C4.04 | SANITARY SEWER & WATER IMPROVEMENTS |
| C5.01 - C5.05 | STORM SEWER IMPROVEMENTS |
| C6.01 - C6.17 | STREET IMPROVEMENTS |
| C6.18 - C6.23 | CROSS SECTIONS |
| C7.01 | TRAFFIC CONTROL |
| C7.02 - C7.05 | STREET SIGNAGE PLAN |
| C7.06 - C7.08 | STREET STRIPING PLAN |
| C8.01 - C8.30 | STREET CROSS SECTIONS |
| C8.31 | HILLSIDE TRAIL SIDEWALK CROSS SECTIONS |
| ELECTRICAL | |
| E1.01 - E1.03 | STREET LIGHTING PLAN |

THIS PLAN SET CONTAINS 92 SHEETS.

| | |
|---|---|
| MYRON BAILEY | MAYOR |
| DAVID THIEDE | COUNCIL MEMBER |
| MONIQUE GARZA | COUNCIL MEMBER |
| JUSTIN OLSEN | COUNCIL MEMBER |
| DAVID CLAUSEN | COUNCIL MEMBER |
| JENNIFER LEVITT | CITY ADMINISTRATOR |
| RYAN BURFEIND | DIRECTOR OF PUBLIC WORKS |
| KORINE LAND | ATTORNEY |

PROJECT CONTROL NOTES:
1. ALL COORDINATES ARE WASHINGTON COUNTY COORDINATE SYSTEM
2. HORIZONTAL COORDINATES ARE BASED ON GEODETIC POSITION NAD83, 1986 ADJUSTMENT
3. VERTICAL ELEVATIONS ARE BASED ON MNDOT NAVD 88

MAP OF THE
CITY OF COTTAGE GROVE
WASHINGTON COUNTY, MN

0 2000 4000
SCALE FEET

N

© Bolton & Menk, Inc. 2026, All Rights Reserved
H:\COTT\24X137045000\CAD\C3D\137045G001.dwg 2/25/2026 6:23:47 AM

I HEREBY CERTIFY THAT THIS PLAN, SPECIFICATION, OR REPORT WAS PREPARED BY ME OR UNDER MY DIRECT SUPERVISION AND THAT I AM A DULY LICENSED PROFESSIONAL ENGINEER UNDER THE LAWS OF THE STATE OF MINNESOTA.

MICHAEL J BOEX
LIC. NO. 44576 DATE MM/DD/YYYY

BOLTON & MENK
3507 HIGH POINT DRIVE NORTH
BLDG. 1 - SUITE E130
OAKDALE, MN 55128
Phone: (651) 704-9970
Email: Oakdale@bolton-menk.com
www.bolton-menk.com

Cottage Grove
Where Pride and Prosperity Meet

| | |
|---|---|
| DESIGNED | ANO |
| DRAWN | BNM |
| CHECKED | MJB |
| CLIENT PROJ. NO. | 137045 |

| NO. | ISSUED FOR | DATE |
|---|---|---|

CITY OF COTTAGE GROVE
2026 PAVEMENT MANAGEMENT PROJECT
TITLE SHEET

SHEET G0.01

## EXISTING TOPOGRAPHIC SYMBOLS

- ACCESS GRATE
- AIR CONDITION UNIT
- ANTENNA
- AUTO SPRINKLER CONNECTION
- BARRICADE PERMANENT
- BASKETBALL POST
- BENCH
- BIRD FEEDER
- BOLLARD
- BUSH
- CATCH BASIN RECTANGULAR CASTING
- CATCH BASIN CIRCULAR CASTING
- CURB STOP
- CLEAN OUT
- CULVERT END
- DRINKING FOUNTAIN
- DOWN SPOUT
- ELECTRIC CAR CHARGE STATION
- FILL PIPE
- FIRE HYDRANT
- FLAG POLE
- FLARED END / APRON
- FUEL PUMP
- GRILL
- GUY WIRE ANCHOR
- HANDHOLE
- HANDICAP SPACE
- IRRIGATION SPRINKLER HEAD
- IRRIGATION VALVE BOX
- LIFT STATION CONTROL PANEL
- LIFT STATION
- LIGHT POLE
- MAILBOX
- MANHOLE-COMMUNICATION
- MANHOLE-ELECTRIC
- MANHOLE-GAS
- MANHOLE-HEAT
- MANHOLE-RECLAIMED WATER
- MANHOLE-SANITARY SEWER
- MANHOLE-STORM SEWER
- MANHOLE-UTILITY
- MANHOLE-WATER
- METER
- DRIVE-THRU MICROPHONE
- PARKING METER
- PAVEMENT MARKING
- PEDESTAL-COMMUNICATION
- PEDESTAL-ELECTRIC
- PEDESTRIAN PUSH BUTTON
- PICNIC TABLE
- POLE-UTILITY
- POST
- RAILROAD SIGNAL POLE
- REGULATION STATION GAS
- SATELLITE DISH
- SIGN TRAFFIC
- SIGNAL CONTROL CABINET
- SOIL BORING
- SIREN
- TELEPHONE BOOTH
- TILE INLET
- TILE OUTLET
- TILE RISER
- TRANSFORMER-ELECTRIC
- TREE-CONIFEROUS
- TREE-DEAD
- TREE-DECIDUOUS
- TREE STUMP
- TRAFFIC ARM BARRIER
- TRAFFIC SIGNAL
- TRASH CAN
- UTILITY MARKER
- VALVE
- VALVE POST INDICATOR
- VALVE VAULT
- VAULT
- VENT PIPE
- WATER SPIGOT
- WELL
- WETLAND DELINEATED MARKER
- WETLAND
- WET WELL
- YARD HYDRANT

## PROPOSED TOPOGRAPHIC SYMBOLS

- CLEANOUT
- MANHOLE
- LIFT STATION
- STORM SEWER CIRCULAR CASTING
- STORM SEWER RECTANGULAR CASTING
- STORM SEWER FLARED END / APRON
- STORM SEWER OUTLET STRUCTURE
- STORM SEWER OVERFLOW STRUCTURE
- CURB BOX
- FIRE HYDRANT
- WATER VALVE
- WATER REDUCER
- WATER BEND
- WATER TEE
- WATER CROSS
- WATER SLEEVE
- WATER CAP / PLUG
- RIP RAP
- DRAINAGE FLOW
- TRAFFIC SIGNS

## SURVEY SYMBOLS

- BENCHMARK LOCATION
- CONTROL POINT
- MONUMENT FOUND
- CAST IRON MONUMENT
- STONE MONUMENT

## EXISTING TOPOGRAPHIC LINES

- RETAINING WALL
- FENCE
- FENCE-DECORATIVE
- GUARD RAIL
- TREE LINE
- BUSH LINE

## SURVEY LINES

- CONTROLLED ACCESS
- BOUNDARY
- CENTERLINE
- EXISTING EASEMENT LINE
- PROPOSED EASEMENT LINE
- EXISTING LOT LINE
- PROPOSED LOT LINE
- EXISTING RIGHT-OF-WAY
- PROPOSED RIGHT-OF-WAY
- SETBACK LINE
- SECTION LINE
- QUARTER LINE
- SIXTEENTH LINE
- TEMPORARY EASEMENT

## EXISTING UTILITY LINES

- FORCEMAIN
- SANITARY SEWER
- SANITARY SERVICE
- STORM SEWER
- STORM SEWER DRAIN TILE
- WATERMAIN
- WATER SERVICE
- RECLAIMED WATER

## PROPOSED UTILITY LINES

- FORCEMAIN
- SANITARY SEWER
- SANITARY SERVICE
- STORM SEWER
- STORM SEWER DRAIN TILE
- WATERMAIN
- WATER SERVICE
- PIPE CASING
- TRENCHLESS PIPE (PLAN VIEW)
- TRENCHLESS PIPE (PROFILE VIEW)

## GRADING INFORMATION

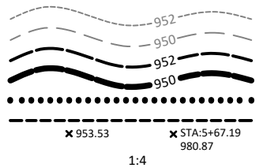


- EXISTING CONTOUR MINOR
- EXISTING CONTOUR MAJOR
- PROPOSED CONTOUR MINOR
- PROPOSED CONTOUR MAJOR
- PROPOSED GRADING LIMITS / SLOPE LIMITS
- PROJECT LIMITS
- PROPOSED SPOT ELEVATION
- RISE:RUN (SLOPE)

## HATCH PATTERNS

- BITUMINOUS
- GRAVEL
- CONCRETE

## EXISTING PRIVATE UTILITY LINES

NOTE:
EXISTING UTILITY INFORMATION SHOWN ON THIS PLAN HAS BEEN PROVIDED BY THE UTILITY OWNER. THE CONTRACTOR SHALL FIELD VERIFY EXACT LOCATIONS PRIOR TO COMMENCING CONSTRUCTION AS REQUIRED BY STATE LAW. NOTIFY GOPHER STATE ONE CALL, 1-800-252-1166 OR 651-454-0002.

THE SUBSURFACE UTILITY INFORMATION IN THIS PLAN IS UTILITY QUALITY LEVEL D UNLESS OTHERWISE NOTED. THIS UTILITY LEVEL WAS DETERMINED ACCORDING TO THE GUIDELINES OF CI/ASCE 38-22, ENTITLED "STANDARD GUIDELINE FOR INVESTIGATING AND DOCUMENTING EXISTING UTILITIES".

- UNDERGROUND FIBER OPTIC
- UNDERGROUND ELECTRIC
- UNDERGROUND GAS
- UNDERGROUND COMMUNICATION
- OVERHEAD ELECTRIC
- OVERHEAD COMMUNICATION
- OVERHEAD UTILITY

UTILITIES IDENTIFIED WITH A QUALITY LEVEL :

LINE TYPES FOLLOW THE FORMAT: UTILITY TYPE - QUALITY LEVEL
EXAMPLE: G-A G-A UNDERGROUND GAS, QUALITY LEVEL A
UTILITY QUALITY LEVEL (A,B,C,D) DEFINITIONS CAN BE FOUND IN CI/ASCE 38-22.

UTILITY QUALITY LEVELS:

QUALITY LEVEL D: PROVIDES THE MOST BASIC LEVEL OF INFORMATION. IT INVOLVES COLLECTING DATA FROM EXISTING UTILITY RECORDS. RECORDS MAY INCLUDE AS-BUILT DRAWINGS, DISTRIBUTION AND SERVICES MAPS, EXISTING GEOGRAPHIC INFORMATION SYSTEM DATABASES, CONSTRUCTION PLANS, ETC.

QUALITY LEVEL C: INVOLVES SURVEYING VISIBLE SUBSURFACE UTILITY STRUCTURES SUCH AS MANHOLES, HAND-HOLES, UTILITY VALVES AND METERS, FIRE HYDRANTS, PEDESTALS AND UTILITY MARKERS, AND THEN CORRELATING THE INFORMATION WITH EXISTING UTILITY RECORDS TO CREATE COMPOSITE DRAWINGS. INCLUDES QUALITY LEVEL D ACTIVITIES.

QUALITY LEVEL B: INVOLVES DESIGNATING THE HORIZONTAL POSITION OF SUBSURFACE UTILITIES THROUGH SURFACE DETECTION METHODS AND COLLECTING THE INFORMATION THROUGH A SURVEY METHOD. INCLUDES QUALITY LEVEL C AND D TASKS.

QUALITY LEVEL A: PROVIDES THE HIGHEST LEVEL OF ACCURACY. IT INVOLVES LOCATING OR POTHOLING UTILITIES AS WELL AS ACTIVITIES IN QUALITY LEVELS B, C, AND D. THE LOCATED FACILITY INFORMATION IS SURVEYED AND MAPPED AND THE DATA PROVIDES PRECISE PLAN AND PROFILE INFORMATION.

## ABBREVIATIONS

| | | | | | |
|---|---|---|---|---|---|
| A | ALGEBRAIC DIFFERENCE | GRAV | GRAVEL | RSC | RIGID STEEL CONDUIT |
| ADJ | ADJUST | GU | GUTTER | RT | RIGHT |
| ALT | ALTERNATE | GV | GATE VALVE | SAN | SANITARY SEWER |
| B-B | BACK TO BACK | HDPE | HIGH DENSITY POLYETHYLENE | SCH | SCHEDULE |
| BIT | BITUMINOUS | HH | HANDHOLE | SERV | SERVICE |
| BLDG | BUILDING | HP | HIGH POINT | SHLD | SHOULDER |
| BMP | BEST MANAGEMENT PRACTICE | HWL | HIGH WATER LEVEL | STA | STATION |
| BR | BEGIN RADIUS | HYD | HYDRANT | STD | STANDARD |
| BV | BUTTERFLY VALVE | I | INVERT | STM | STORM SEWER |
| CB | CATCH BASIN | K | CURVE COEFFICIENT | TC | TOP OF CURB |
| C&G | CURB AND GUTTER | L | LENGTH | TE | TEMPORARY EASEMENT |
| CIP | CAST IRON PIPE | LO | LOWEST OPENING | TEMP | TEMPORARY |
| CIPP | CURED-IN-PLACE PIPE | LP | LOW POINT | TNH | TOP NUT HYDRANT |
| CL | CENTER LINE | LT | LEFT | TP | TOP OF PIPE |
| CL. | CLASS | MAX | MAXIMUM | TYP | TYPICAL |
| CLVT | CULVERT | MH | MANHOLE | VCP | VITRIFIED CLAY PIPE |
| CMP | CORRUGATED METAL PIPE | MIN | MINIMUM | VERT | VERTICAL |
| C.O. | CHANGE ORDER | MR | MID RADIUS | VPC | VERTICAL POINT OF CURVE |
| COMM | COMMUNICATION | NIC | NOT IN CONTRACT | VPI | VERTICAL POINT OF INTERSECTION |
| CON | CONCRETE | NMC | NON-METALLIC CONDUIT | VPT | VERTICAL POINT OF TANGENT |
| CSP | CORRUGATED STEEL PIPE | NTS | NOT TO SCALE | WM | WATERMAIN |
| DIA | DIAMETER | NWL | NORMAL WATER LEVEL | | |
| DIP | DUCTILE IRON PIPE | OHW | ORDINARY HIGH WATER LEVEL | | |
| DWY | DRIVEWAY | PC | POINT OF CURVE | AC | ACRES |
| E | EXTERNAL CURVE DISTANCE | PCC | POINT OF COMPOUND CURVE | CF | CUBIC FEET |
| ELEC | ELECTRIC | PE | PERMANENT EASEMENT | CV | COMPACTED VOLUME |
| ELEV | ELEVATION | PED | PEDESTRIAN, PEDESTAL | CY | CUBIC YARD |
| EOF | EMERGENCY OVERFLOW | PERF | PERFORATED PIPE | EA | EACH |
| ER | END RADIUS | PERM | PERMANENT | EV | EXCAVATED VOLUME |
| ESMT | EASEMENT | PI | POINT OF INTERSECTION | LB | POUND |
| EX | EXISTING | PL | PROPERTY LINE | LF | LINEAR FEET |
| FES | FLARED END SECTION | PRC | POINT OF REVERSE CURVE | LS | LUMP SUM |
| F-F | FACE TO FACE | PT | POINT OF TANGENT | LV | LOOSE VOLUME |
| FF | FINISHED FLOOR | PVC | POLYVINYL CHLORIDE PIPE | SF | SQUARE FEET |
| F&I | FURNISH AND INSTALL | PVMT | PAVEMENT | SV | STOCKPILE VOLUME |
| FM | FORCEMAIN | R | RADIUS | SY | SQUARE YARD |
| FO | FIBER OPTIC | R/W | RIGHT-OF-WAY | | |
| F.O. | FIELD ORDER | RCP | REINFORCED CONCRETE PIPE | | |
| GRAN | GRANULAR | RET | RETAINING | | |

© Bolton & Menk, Inc. 2026. All Rights Reserved
I:\CITY\2026\137045001\CAD\C3D\137045001.dwg 2/25/2026 6:23:46 AM

I HEREBY CERTIFY THAT THIS PLAN, SPECIFICATION, OR REPORT WAS PREPARED BY ME OR UNDER MY DIRECT SUPERVISION AND THAT I AM A DULY LICENSED PROFESSIONAL ENGINEER UNDER THE LAWS OF THE STATE OF MINNESOTA.
MICHAEL J BOEX
LIC. NO. 44576 DATE MM/DD/YYYY

BOLTON & MENK
3507 HIGH POINT DRIVE NORTH
BLDG. 1 - SUITE E130
OAKDALE, MN 55128
Phone: (651) 704-9970
Email: Oakdale@bolton-menk.com
www.bolton-menk.com

Cottage Grove
Where Pride and Prosperity Meet

| DESIGNED | NO. | ISSUED FOR | DATE |
|---|---|---|---|
| ANO | | | |
| DRAWN | | | |
| BNM | | | |
| CHECKED | | | |
| MJB | | | |
| CLIENT PROJ. NO. | | | |
| 137045 | | | |

CITY OF COTTAGE GROVE
2026 PAVEMENT MANAGEMENT PROJECT
LEGEND

SHEET G0.02

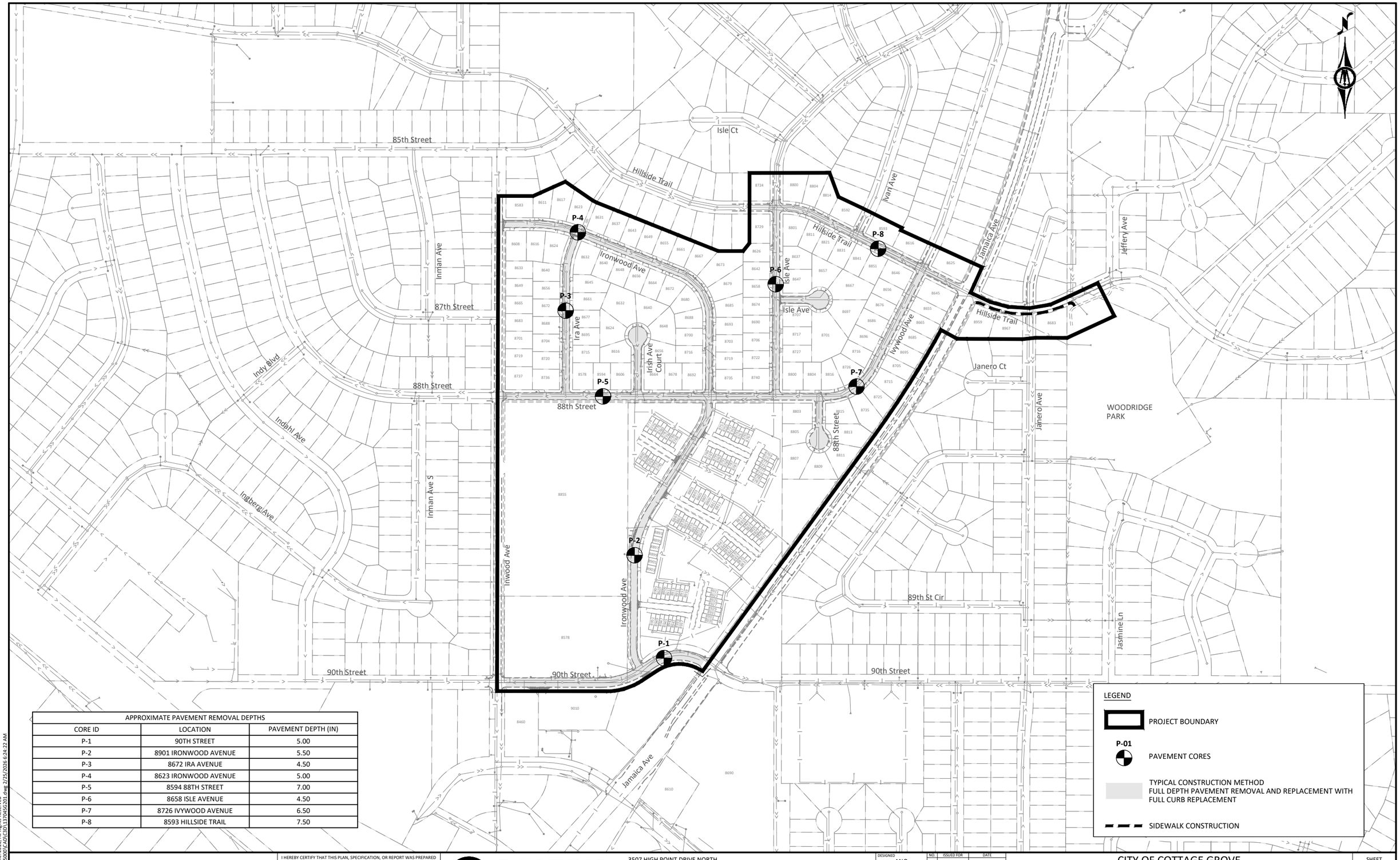


| APPROXIMATE PAVEMENT REMOVAL DEPTHS | | |
|---|---|---|
| CORE ID | LOCATION | PAVEMENT DEPTH (IN) |
| P-1 | 90TH STREET | 5.00 |
| P-2 | 8901 IRONWOOD AVENUE | 5.50 |
| P-3 | 8672 IRA AVENUE | 4.50 |
| P-4 | 8623 IRONWOOD AVENUE | 5.00 |
| P-5 | 8594 88TH STREET | 7.00 |
| P-6 | 8658 ISLE AVENUE | 4.50 |
| P-7 | 8726 IVYWOOD AVENUE | 6.50 |
| P-8 | 8593 HILLSIDE TRAIL | 7.50 |

LEGEND

- PROJECT BOUNDARY
- P-01 PAVEMENT CORES
- TYPICAL CONSTRUCTION METHOD FULL DEPTH PAVEMENT REMOVAL AND REPLACEMENT WITH FULL CURB REPLACEMENT
- SIDEWALK CONSTRUCTION

HORZ. SCALE 0 200 400 FEET

I HEREBY CERTIFY THAT THIS PLAN, SPECIFICATION, OR REPORT WAS PREPARED BY ME OR UNDER MY DIRECT SUPERVISION AND THAT I AM A DULY LICENSED PROFESSIONAL ENGINEER UNDER THE LAWS OF THE STATE OF MINNESOTA.

MICHAEL J BOEX
LIC. NO. 44576 DATE MM/DD/YYYY

BOLTON & MENK

3507 HIGH POINT DRIVE NORTH
BLDG. 1 - SUITE E130
OAKDALE, MN 55128
Phone: (651) 704-9970
Email: Oakdale@bolton-menk.com
www.bolton-menk.com

Cottage Grove
Where Pride and Prosperity Meet

| DESIGNED | ANO |
|---|---|
| DRAWN | BNM |
| CHECKED | MJB |
| CLIENT PROJ. NO. | 137045 |

| NO. | ISSUED FOR | DATE |
|---|---|---|
| | | |

CITY OF COTTAGE GROVE
2026 PAVEMENT MANAGEMENT PROJECT
LOCATION PLAN

SHEET G2.01

©Bolton & Menk, Inc. 2026. All Rights Reserved
H:\COTT\24X\137045000\CAD\C3D\137045C201.dwg 2/25/2026 6:24:22 AM

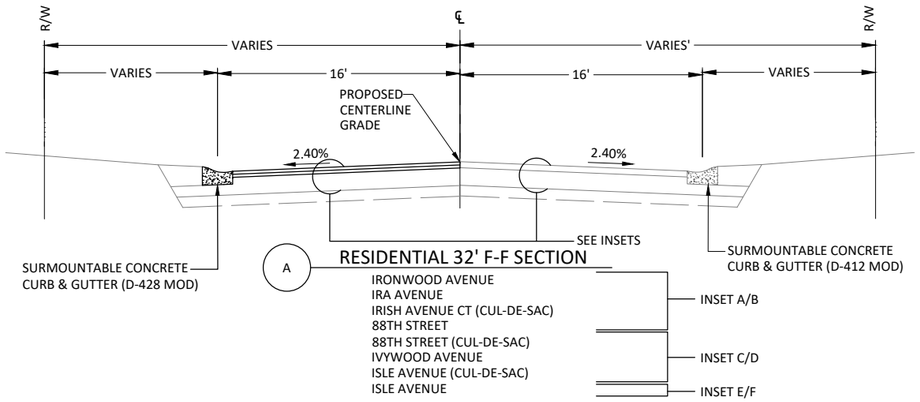


A RESIDENTIAL 32' F-F SECTION

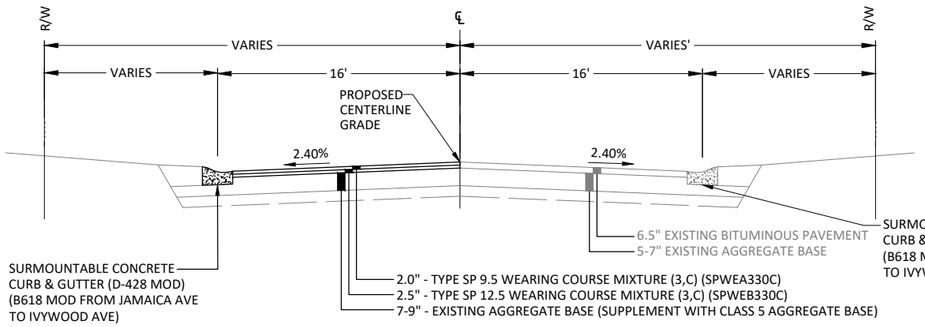


B MAJOR COLLECTOR 32' F-F SECTION

HILLSIDE AVE

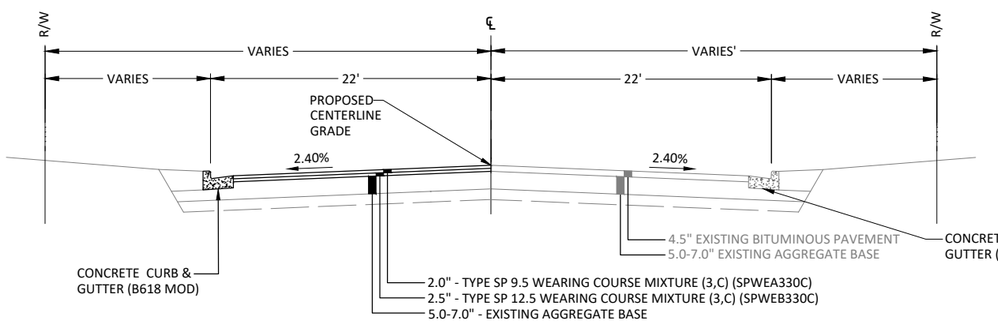


C MINOR COLLECTOR 44' F-F SECTION

90TH STREET

INSET A - BITUMINOUS STREET

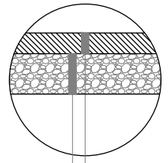

EXISTING SECTION (SEE SHEET G2.01 FOR CORING RESULTS)
4.5"-7" - EXISTING BITUMINOUS PAVEMENT
4"-6" - EXISTING RECLAIMED AGGREGATE BASE

INSET B - BITUMINOUS STREET

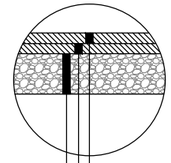

PROPOSED
1.5" - TYPE SP 9.5 WEARING COURSE MIXTURE (3,C) (SPWEA330C)
2.0" - TYPE SP 9.5 WEARING COURSE MIXTURE (3,C) (SPWEA330C)
5"-8" - EXISTING RECLAIMED AGGREGATE BASE (SUPPLEMENT WITH CLASS 5 AGGREGATE BASE)

INSET C - BITUMINOUS STREET

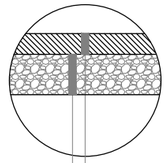

EXISTING SECTION (SEE SHEET G2.01 FOR CORING RESULTS)
4"-7.5" - EXISTING BITUMINOUS PAVEMENT
5"-8" - EXISTING AGGREGATE BASE

INSET D - BITUMINOUS STREET

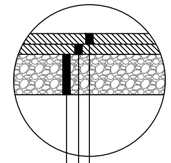

PROPOSED
1.5" - TYPE SP 9.5 WEARING COURSE MIXTURE (3,C) (SPWEA330C)
2.0" - TYPE SP 9.5 WEARING COURSE MIXTURE (3,C) (SPWEA330C)
5"-12" - EXISTING AGGREGATE BASE (SUPPLEMENT WITH CLASS 5 AGGREGATE BASE)

INSET E - BITUMINOUS STREET

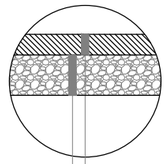

EXISTING SECTION (SEE SHEET G2.01 FOR CORING RESULTS)
3.5"-6.5" - EXISTING BITUMINOUS PAVEMENT
6" - EXISTING AGGREGATE BASE

INSET F - BITUMINOUS STREET

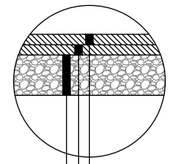

PROPOSED
1.5" - TYPE SP 9.5 WEARING COURSE MIXTURE (3,C) (SPWEA330C)
2.0" - TYPE SP 9.5 WEARING COURSE MIXTURE (3,C) (SPWEA330C)
6"-9" - EXISTING AGGREGATE BASE (SUPPLEMENT WITH CLASS 5 AGGREGATE BASE)

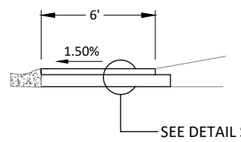


D HILLSIDE TRAIL SIDEWALK SECTION

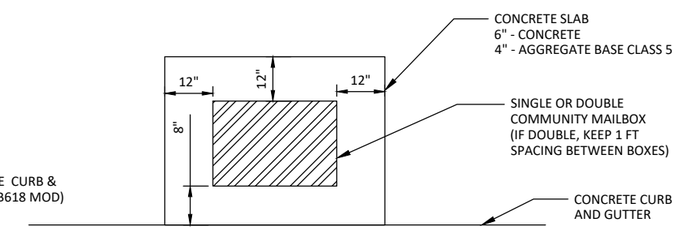


E CONCRETE MAILBOX PAD SECTION

## PAVEMENT REPLACEMENT AREA

TYPICAL CONSTRUCTION
(FULL DEPTH PAVEMENT REMOVAL AND REPLACEMENT WITH FULL CURB REPLACEMENT)

1. INSTALL TEMPORARY TRAFFIC CONTROL PRIOR TO CONSTRUCTION. SALVAGE CASTINGS AND TEMPORARILY PLATE STRUCTURES.
2. PERFORM UTILITY IMPROVEMENTS AND STREET LIGHTING IMPROVEMENTS.
3. REMOVE EXISTING BITUMINOUS PAVEMENT, FULL DEPTH. MAINTAIN TEMPORARY ACCESS TO DRIVEWAYS.
4. REMOVE AND REPLACE CONCRETE CURB AND GUTTER (14 DAY NOTICE REQUIRED), INCLUDING SERVICE STAMPS PER STR-11 (SEE SPECIFICATIONS TO COORDINATE SERVICE LOCATIONS).
5. REMOVE AND REPLACE DRIVEWAYS PER STR-20, CONCRETE PEDESTRIAN RAMPS, AND CONCRETE MAILBOX PADS.
6. BACKFILL CURB.
7. MIX AND FINISH AGGREGATE BASE MATERIAL TO A DEPTH OF 6", SUPPLEMENT EXISTING AGGREGATE BASE WITH CLASS 5 AGGREGATE BASE AS DIRECTED BY ENGINEER.
8. PAVE INITIAL LIFT BITUMINOUS WEARING COURSE .
9. RESTORE DISTURBED AREAS PER STR-19.
10. ADJUST STRUCTURES AND VALVE BOXES IN PAVEMENT WITH HDPE ADJUSTING RINGS.
11. PAVE BITUMINOUS WEARING COURSE.
12. PLACE PAVEMENT MARKINGS AND TRAFFIC SIGNS.
13. MAINTAIN ACCESS FOR LOCAL TRAFFIC AND EMERGENCY VEHICLES AT ALL TIMES. CONTRACTOR SHALL BE RESPONSIBLE FOR ALL TRAFFIC CONTROL, SIGNAGE, FLAGGING, AND ASSOCIATED MAINTENANCE.

©Bolton & Menk, Inc. 2026. All Rights Reserved
H:\CITY\24X\37045000\CAD\C3D\137045C101.dwg 2/25/2026 6:24:13 AM

I HEREBY CERTIFY THAT THIS PLAN, SPECIFICATION, OR REPORT WAS PREPARED BY ME OR UNDER MY DIRECT SUPERVISION AND THAT I AM A DULY LICENSED PROFESSIONAL ENGINEER UNDER THE LAWS OF THE STATE OF MINNESOTA.

MICHAEL J BOEX
LIC. NO. 44576 DATE MM/DD/YYYY

BOLTON & MENK
3507 HIGH POINT DRIVE NORTH
BLDG. 1 - SUITE E130
OAKDALE, MN 55128
Phone: (651) 704-9970
Email: Oakdale@bolton-menk.com
www.bolton-menk.com

Cottage Grove
Where Pride and Prosperity Meet

| DESIGNED | ANO |
|---|---|
| DRAWN | BNM |
| CHECKED | MJB |
| CLIENT PROJ. NO. | 137045 |

| NO. | ISSUED FOR | DATE |
|---|---|---|
| | | |
| | | |
| | | |
| | | |
| | | |

CITY OF COTTAGE GROVE
2026 PAVEMENT MANAGEMENT PROJECT
TYPICAL SECTION DETAIL

SHEET C1.01

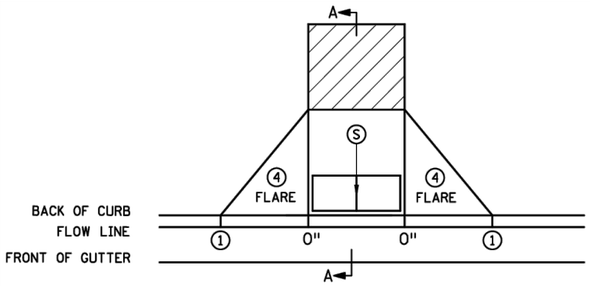


PERPENDICULAR

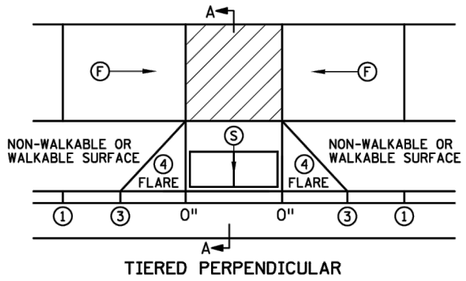


TIERED PERPENDICULAR

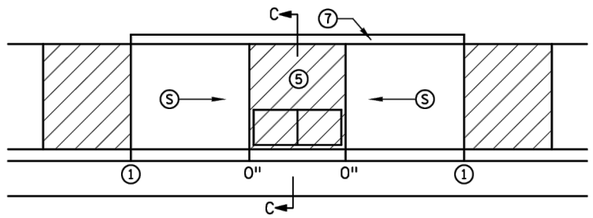


PARALLEL

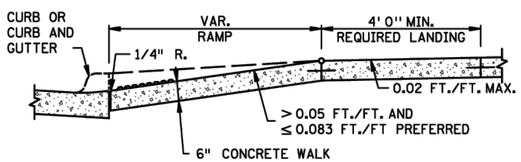


SECTION A-A

PERPENDICULAR/TIERED/DIAGONAL

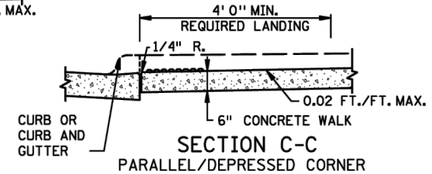


SECTION C-C

PARALLEL/DEPRESSED CORNER

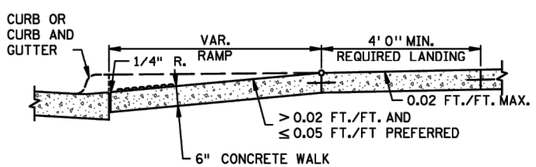


SECTION B-B

FAN

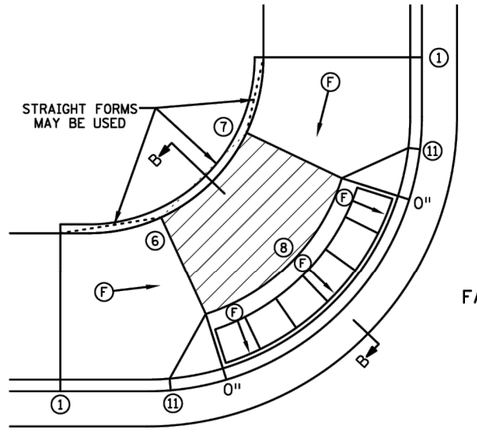


FAN ⑩

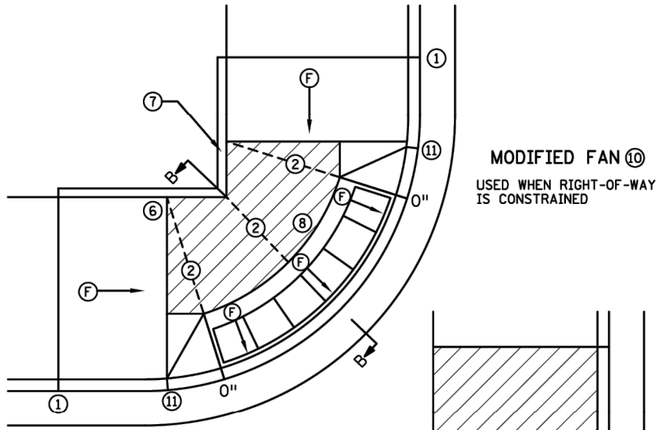


MODIFIED FAN ⑩

USED WHEN RIGHT-OF-WAY IS CONSTRAINED

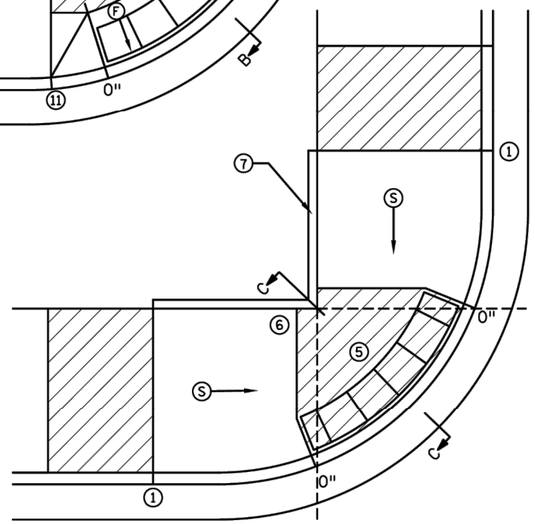


DEPRESSED CORNER

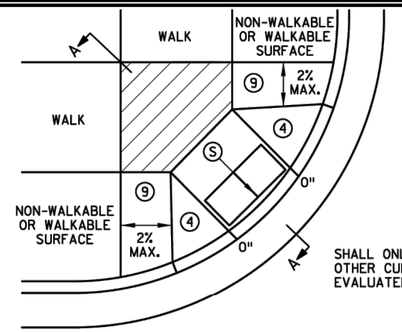


DIAGONAL

SHALL ONLY BE USED AFTER ALL OTHER CURB RAMP TYPES HAVE BEEN EVALUATED AND DEEMED IMPRACTICAL

**NOTES:**

LANDINGS SHALL BE LOCATED ANYWHERE THE PEDESTRIAN ACCESS ROUTE (PAR) CHANGES DIRECTION, AT THE TOP OF RAMPS THAT HAVE RUNNING SLOPES GREATER THAN 5.0%, AND IF THE APPROACHING WALK IS INVERSE GRADE GREATER THAN 2%.

INITIAL CURB RAMP LANDINGS SHALL BE CONSTRUCTED WITHIN 15' FROM THE BACK OF CURB, WITH 6' FROM THE BACK OF CURB BEING THE PREFERRED DISTANCE, ONLY APPLICABLE WHEN THE INITIAL RAMP RUNNING SLOPE IS OVER 5.0%.

SECONDARY CURB RAMP LANDINGS ARE REQUIRED FOR EVERY 30" OF VERTICAL RISE WHEN THE LONGITUDINAL RUNNING SLOPE IS GREATER THAN 5.0%.

CONTRACTION JOINTS SHALL BE CONSTRUCTED ALONG ALL GRADE BREAKS WITHIN THE PAR. 1/4" DEEP VISUAL JOINTS SHALL BE USED AT THE TOPS OF CONCRETE FLARES ADJACENT TO WALKABLE SURFACES.

ALL GRADE BREAKS WITHIN THE PAR SHALL BE PERPENDICULAR TO THE PATH OF TRAVEL. THUS BOTH SIDES OF A SLOPED WALKING SURFACE MUST BE EQUAL LENGTH. (EXCEPT AS STATED IN ⑥ BELOW.

TO ENSURE RAMPS AND LANDINGS ARE PROPERLY CONSTRUCTED, ALL INITIAL LANDINGS AT A TOP OF A RAMPED SURFACE (RUNNING SLOPE GREATER THAN 2%) SHALL BE FORMED AND PLACED SEPARATELY IN AN INDEPENDENT CONCRETE POUR. FOLLOW SIDEWALK REINFORCEMENT DETAILS ON SHEET 6 OF 6 FOR ALL SEPARATELY POURED INITIAL LANDINGS.

WHEN SIDEWALK IS AT BACK OF CURB, TOP OF CURB SHALL MATCH PROPOSED ADJACENT WALK GRADE.

MAINTAIN POSITIVE BOULEVARD DRAINAGE TO TOP OF CURB.

ALL RAMP TYPES SHOULD HAVE A MINIMUM 3' LONG RAMP LENGTH.

4' MINIMUM WIDTH OF DETECTABLE WARNING IS REQUIRED FOR ALL RAMPS. DETECTABLE WARNINGS SHALL CONTINUOUSLY EXTEND FOR A MIN. OF 24" IN THE PATH OF TRAVEL. DETECTABLE WARNING TO COVER THE ENTIRE PAR WIDTH OF SHARED-USE PATHS AND THE ENTIRE PAR WIDTH OF THE WALK WITH THE EXCEPTION OF 3" MAXIMUM ON EACH OUTSIDE EDGE WHICH ENSURES THE DETECTABLE WARNINGS ARE ENCASED IN CONCRETE WHEN ADJACENT TO TURF. WHEN ADJACENT TO CONCRETE FLARES 0" - 3" OFFSET IS ALLOWED.

WHEN DESIGNING OR ORDERING RECTANGULAR DETECTABLE WARNING SURFACES SHOULD BE 6" LESS THAN THE INCOMING PAR. ARC LENGTH OF THE RADIAL DETECTABLE WARNINGS SHOULD NOT BE GREATER THAN 20 FEET.

RECTANGULAR DETECTABLE WARNINGS SHALL BE SETBACK 3" FROM THE BACK OF CURB. RADIAL DETECTABLE WARNINGS SHALL BE SETBACK 3" MINIMUM TO 6" MAXIMUM FROM THE BACK OF CURB.

① MATCH FULL HEIGHT CURB.
② 4' MINIMUM DEPTH LANDING REQUIRED ACROSS TOP OF RAMP.
③ 3" HIGH CURB WHEN USING A 3' LONG RAMP, 4" HIGH CURB WHEN USING A 4' LONG RAMP.
④ SEE SHEET 4 OF 6, TYPICAL SIDE TREATMENT OPTIONS, FOR DETAILS ON FLARES AND RETURNED CURBS.
⑤ DETECTABLE WARNINGS MAY BE PART OF THE 4' X 4' MIN. LANDING AREA IF IT IS NOT FEASIBLE TO CONSTRUCT THE LANDING OUTSIDE OF THE DETECTABLE WARNING AREA.
⑥ THE GRADE BREAK SHALL BE PERPENDICULAR TO THE BACK OF WALK. THIS WILL ENSURE THAT THE GRADE BREAK IS PERPENDICULAR TO THE DIRECTION OF TRAVEL. (TYPICAL FOR ALL)
⑦ WHEN ADJACENT TO GRASS, GRADING SHALL ALWAYS BE USED WHEN FEASIBLE. V CURB, IF USED, SHALL BE PLACED OUTSIDE THE SIDEWALK LIMITS WHEN RIGHT OF WAY ALLOWS. WHEN ADJACENT TO PARKING LOTS, CONCRETE OR BITUMINOUS TAPERS LESS THAN 5% RUNNING SLOPE SHOULD BE USED OVER V CURB TO REDUCE TRIPPING HAZARDS AND FACILITATE SNOW & ICE REMOVAL.
⑧ A 7' MIN TOP RADIUS GRADE BREAK IS REQUIRED TO BE CONSTRUCTIBLE.
⑨ PAVE FULL WALK WIDTH.
⑩ "S" SLOPES ON FANS SHALL ONLY BE USED WHEN ALL OTHER FEASIBLE OPTIONS HAVE BEEN EVALUATED AND DEEMED IMPRACTICAL.
⑪ INTERMEDIATE CURB HEIGHTS TAPER SHALL RISE AT 8-10% TO A MINIMUM 3" CURB HEIGHT. REDUCE INTERMEDIATE CURB HEIGHT TO 2+ INCHES IF NECESSARY TO MATCH ADJACENT BOULEVARD OR SIDEWALK GRADES.

**LEGEND**

THESE LONGITUDINAL SLOPE RANGES SHALL BE THE STARTING POINT. IF SITE CONDITIONS WARRANT, LONGITUDINAL SLOPES UP TO 8.3% OR FLATTER ARE ALLOWED.

- (S) INDICATES PEDESTRIAN RAMP - SLOPE SHALL BE BETWEEN 5.0% MINIMUM AND 8.3% MAXIMUM IN THE DIRECTION SHOWN AND THE CROSS SLOPE SHALL NOT EXCEED 2.0%.
- (F) INDICATES PEDESTRIAN RAMP - SLOPE SHALL BE GREATER THAN 2.0% AND LESS THAN 5.0% IN THE DIRECTION SHOWN AND CROSS SLOPE SHALL NOT EXCEED 2.0%.
- LANDING AREA - 4' X 4' MIN. (5' X 5' MIN. PREFERRED) DIMENSIONS AND MAX 2.0% SLOPE IN ALL DIRECTIONS. LANDING SHALL BE FULL WIDTH OF INCOMING PARS.
- X" CURB HEIGHT

REVISION:

APPROVED: 11-04-2021

JEFFREY PERKINS
OPERATIONS DIVISION

MINNESOTA DEPARTMENT OF TRANSPORTATION

STANDARD PLAN 5-297.250 | 1 OF 6

APPROVED: 11-04-2021
REVISED:

THOMAS STYRBICKI
STATE DESIGN ENGINEER

# PEDESTRIAN CURB RAMP DETAILS

STATE PROJ. NO. (TH ) SHEET NO. OF SHEETS

©Bolton & Menk, Inc. 2026. All Rights Reserved
H:\COTT\24X13\7045000\CAD\C3D\137045C102.dwg 2/25/2026 6:24:37 AM

BOLTON & MENK
3507 HIGH POINT DRIVE NORTH
BLDG. 1 - SUITE E130
OAKDALE, MN 55128
Phone: (651) 704-9970
Email: Oakdale@bolton-menk.com
www.bolton-menk.com

Cottage Grove — Where Pride and Prosperity Meet

| DESIGNED | NO. | ISSUED FOR | DATE |
|---|---|---|---|
| DRAWN | | | |
| CHECKED | | | |
| CLIENT PROJ. NO. 137045 | | | |

CITY OF COTTAGE GROVE
2026 PAVEMENT MANAGEMENT PROJECT
MNDOT PEDESTRIAN CURB RAMP DETAILS

SHEET C1.02

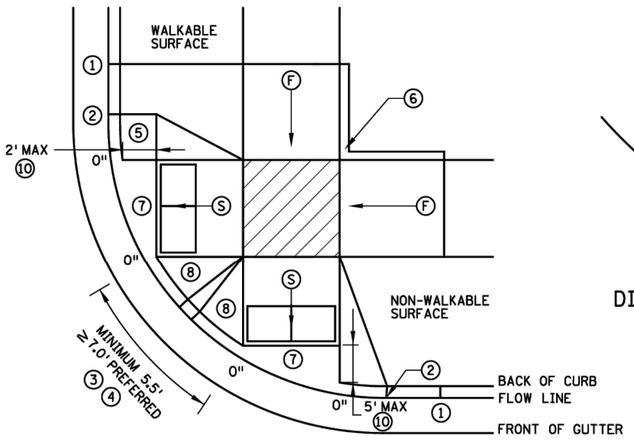


COMBINED DIRECTIONAL

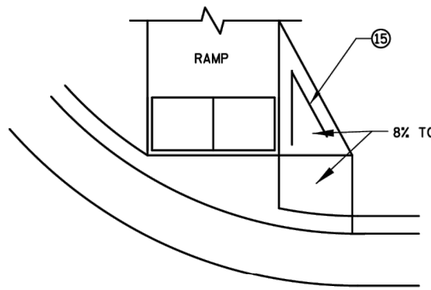


DIRECTIONAL RAMP WALKABLE FLARE

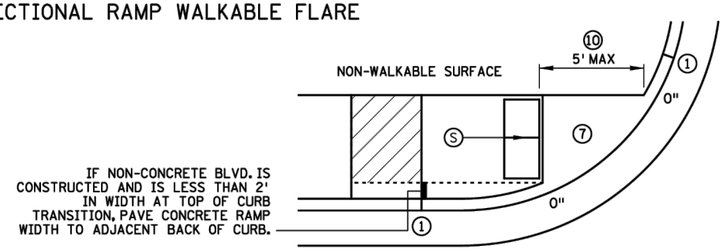


IF NON-CONCRETE BLVD. IS CONSTRUCTED AND IS LESS THAN 2' IN WIDTH AT TOP OF CURB TRANSITION, PAVE CONCRETE RAMP WIDTH TO ADJACENT BACK OF CURB.

STANDARD ONE-WAY DIRECTIONAL ⑨

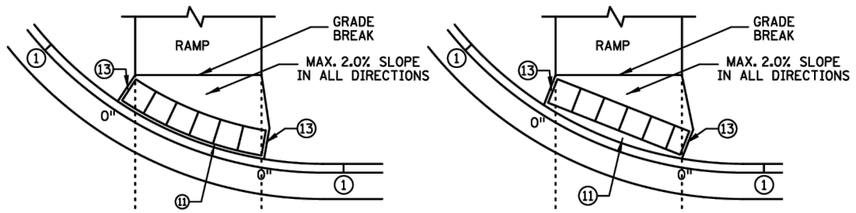


DETECTABLE WARNING PLACEMENT WHEN SETBACK CRITERIA IS EXCEEDED ⑫

ONE-WAY DIRECTIONAL WITH DETECTABLE WARNING AT BACK OF CURB

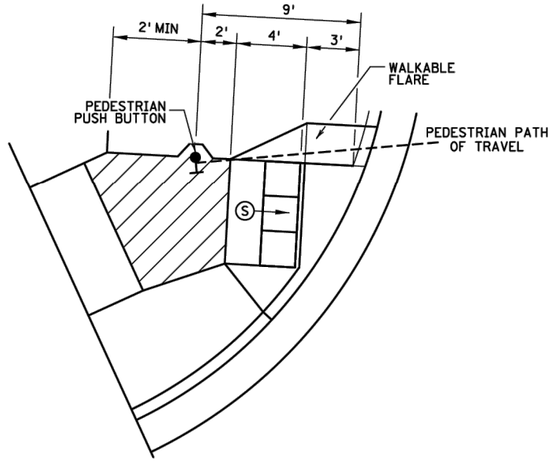


SEMI-DIRECTIONAL RAMP ③④⑨

3' DOME SETBACK, 4' LONG RAMP AND PUSH BUTTON 9' FROM THE BACK OF CURB

PRIMARILY USED FOR APS APPLICATIONS WHERE THE PAR DOES NOT CONTINUE PAST THE PUSH BUTTON (DEAD-END SIDEWALK)

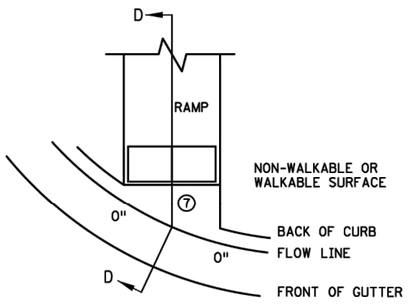


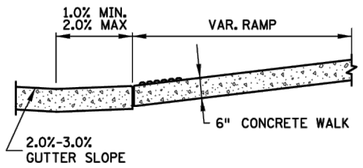


SECTION D-D

CURB FOR DIRECTIONAL RAMPS ⑭

**NOTES:**

LANDINGS SHALL BE LOCATED ANYWHERE THE PEDESTRIAN ACCESS ROUTE (PAR) CHANGES DIRECTION, AT THE TOP OF RAMPS THAT HAVE RUNNING SLOPES GREATER THAN 5.0%, AND IF THE APPROACHING WALK IS INVERSE GRADE.

INITIAL CURB RAMP LANDINGS SHALL BE CONSTRUCTED WITHIN 15' FROM THE BACK OF CURB, WITH 6' FROM THE BACK OF CURB BEING THE PREFERRED DISTANCE, ONLY APPLICABLE WHEN THE INITIAL RAMP RUNNING SLOPE IS OVER 5.0%.

SECONDARY CURB RAMP LANDINGS ARE REQUIRED FOR EVERY 30" OF VERTICAL RISE WHEN THE LONGITUDINAL SLOPE IS GREATER THAN 5.0%.

CONTRACTION JOINTS SHALL BE CONSTRUCTED ALONG ALL GRADE BREAKS WITHIN THE PAR. 1/4" DEEP VISUAL JOINTS SHALL BE USED AT THE TOP GRADE BREAK OF CONCRETE FLARES ADJACENT TO WALKABLE SURFACES.

ALL GRADE BREAKS WITHIN THE PAR SHALL BE PERPENDICULAR TO THE PATH OF TRAVEL. THUS BOTH SIDES OF A SLOPED WALKING SURFACE MUST BE EQUAL LENGTH.

TO ENSURE INITIAL RAMPS AND INITIAL LANDINGS ARE PROPERLY CONSTRUCTED, LANDINGS SHALL BE CAST SEPARATELY. FOLLOW SIDEWALK REINFORCEMENT DETAILS ON SHEET 6 AND THE ADA SPECIAL PROVISION (PROSECUTION OF WORK).

TOP OF CURB SHALL MATCH PROPOSED ADJACENT WALK GRADE.

WHEN THE BOULEVARD IS 4' WIDE OR LESS, THE TOP OF CURB TAPER SHALL MATCH THE RAMP SLOPES TO REDUCE NEGATIVE BOULEVARD SLOPES FROM THE TOP BACK OF CURB TO THE PAR.

ALL RAMP TYPES SHOULD HAVE A MINIMUM 3' LONG RAMP LENGTH.

4' MINIMUM WIDTH OF DETECTABLE WARNING IS REQUIRED FOR ALL RAMPS. DETECTABLE WARNINGS SHALL CONTINUOUSLY EXTEND FOR A MIN. OF 24" IN THE PATH OF TRAVEL. DETECTABLE WARNING TO COVER THE ENTIRE PAR WIDTH OF SHARED-USE PATHS AND THE ENTIRE PAR WIDTH OF THE WALK WITH THE EXCEPTION OF 3" MAXIMUM ON EACH OUTSIDE EDGE WHICH ENSURES THE DETECTABLE WARNINGS ARE ENCASED IN CONCRETE WHEN ADJACENT TO TURF. WHEN ADJACENT TO CONCRETE FLARES 0" - 3" OFFSET IS ALLOWED.

WHEN DESIGNING OR ORDERING RECTANGULAR DETECTABLE WARNING SURFACES SHOULD BE 6" LESS THAN THE INCOMING PAR. ARC LENGTH OF THE RADIAL DETECTABLE WARNINGS SHOULD NOT BE GREATER THAN 20 FEET.

RADIAL DETECTABLE WARNINGS SHALL BE SETBACK 3" MINIMUM TO 6" MAXIMUM FROM THE BACK OF CURB. SEE NOTES ⑩ & ⑪ FOR INFORMATION REGARDING RECTANGULAR DETECTABLE WARNING PLACEMENT.

① MATCH FULL CURB HEIGHT.

② 3" HIGH CURB WHEN USING A 3' LONG RAMP
4" HIGH CURB WHEN USING A 4' LONG RAMP.

③ 3" MINIMUM CURB HEIGHT (5.5' MIN. DISTANCE REQUIRED BETWEEN DOMES)
4" PREFERRED (7' MIN. DISTANCE REQUIRED BETWEEN DOMES).

④ THE "BUMP" IN BETWEEN THE RAMPS SHOULD NOT BE IN THE PATH OF TRAVEL FOR COMBINED DIRECTIONAL RAMPS. IF THIS OCCURS MODIFY THE RAMP LOCATION OR SWITCH RAMP TO A FAN/DEPRESSED CORNER.

⑤ WHEN USING CONCRETE PAVED FLARES ON THE OUTSIDE OF DIRECTIONAL RAMPS, AND ADJACENT TO A WALKABLE SURFACE, DIRECTIONAL RAMP FLARES SHALL BE USED. SEE THE DETAIL ON THIS SHEET.

⑥ GRADING SHALL ALWAYS BE USED WHEN FEASIBLE. V CURB, IF USED, SHALL BE PLACED OUTSIDE THE SIDEWALK LIMITS WHEN RIGHT OF WAY ALLOWS. WHEN ADJACENT TO PARKING LOTS, CONCRETE OR BITUMINOUS TAPERS SHOULD BE USED OVER V CURB TO REDUCE TRIPPING HAZARDS AND FACILITATE SNOW & ICE REMOVAL.

⑦ MAX. 2.0% SLOPE IN ALL DIRECTIONS IN FRONT OF GRADE BREAK AND DRAIN TO FLOW LINE. SHALL BE CONSTRUCTED INTEGRAL WITH CURB AND GUTTER.

⑧ 8% TO 10% WALKABLE FLARE.

⑨ PLACE DOMES AT THE BACK OF CURB WHEN ALLOWABLE SETBACK CRITERIA IS EXCEEDED.

⑩ FRONT EDGE OF DETECTABLE WARNING SHALL BE SET BACK 2' MAXIMUM WHEN ADJACENT TO WALKABLE SURFACE, AND 5' MAXIMUM WHEN ADJACENT TO NON-WALKABLE SURFACE WITH ONE CORNER SET 3" FROM BACK OF CURB. A WALKABLE SURFACE IS DEFINED AS A PAVED SURFACE ADJACENT TO A CURB RAMP WITHOUT RAISED OBSTACLES THAT COULD MISTAKENLY BE TRAVERSED BY A USER WHO IS VISUALLY IMPAIRED.

⑪ RECTANGULAR DETECTABLE WARNINGS MAY BE SETBACK UP TO 9" FROM THE BACK OF CURB WITH CORNERS SET 3" FROM BACK OF CURB. IF 9" SETBACK IS EXCEEDED USE RADIAL DETECTABLE WARNINGS.

⑫ FOR DIRECTIONAL RAMPS WITH THE DETECTABLE WARNINGS PLACED AT THE BACK OF CURB, THE DETECTABLE WARNINGS SHALL COVER THE ENTIRE WIDTH OF THE WALK/PATH. THIS ENSURES A DETECTABLE EDGE AND HELPS ELIMINATE THE CURB TAPER OBSTRUCTING THE PATH OF PEDESTRIAN TRAVEL.

⑬ THE CONCRETE WALK SHALL BE FORMED AND CONSTRUCTED PERPENDICULAR TO THE BACK OF CURB. MAINTAIN 3" BETWEEN EDGE OF DOMES AND EDGE OF CONCRETE.

⑭ TO BE USED FOR ALL DIRECTIONAL RAMPS, EXCEPT WHERE DOMES ARE PLACED ALONG THE BACK OF CURB.

⑮ PLACE 2 NO. 4 BARS 4 INCHES FROM SIDE OF FORMS WITH A MINIMUM 2 INCHES OF CONCRETE COVER ALONG EACH SIDE OF FLARE (INCIDENTAL).

**LEGEND**

THESE LONGITUDINAL SLOPE RANGES SHALL BE THE STARTING POINT. IF SITE CONDITIONS WARRANT, LONGITUDINAL SLOPES UP TO 8.3% OR FLATTER ARE ALLOWED.

Ⓢ INDICATES PEDESTRIAN RAMP - SLOPE SHALL BE BETWEEN 5.0% MINIMUM AND 8.3% MAXIMUM IN THE DIRECTION SHOWN AND THE CROSS SLOPE SHALL NOT EXCEED 2.0%.

Ⓕ INDICATES PEDESTRIAN RAMP - SLOPE SHALL BE GREATER THAN 2.0% AND LESS THAN 5.0% IN THE DIRECTION SHOWN AND CROSS SLOPE SHALL NOT EXCEED 2.0%.

LANDING AREA - 4' X 4' MIN. (5' X 5' MIN. PREFERRED) DIMENSIONS AND MAX 2.0% SLOPE IN ALL DIRECTIONS. LANDING SHALL BE FULL WIDTH OF INCOMING PARS.

X" CURB HEIGHT

REVISION:

APPROVED: 11-04-2021

JEFFREY J. PERKINS
OPERATIONS DIVISION

MINNESOTA DEPARTMENT OF TRANSPORTATION

THOMAS STYRBICKI
STATE DESIGN ENGINEER

STANDARD PLAN 5-297.250 | 2 OF 6

APPROVED: 11-04-2021
REVISED:

STATE PROJ. NO. (T.H. ) SHEET NO. OF SHEETS

# PEDESTRIAN CURB RAMP DETAILS

BOLTON & MENK
3507 HIGH POINT DRIVE NORTH
BLDG. 1 - SUITE E130
OAKDALE, MN 55128
Phone: (651) 704-9970
Email: Oakdale@bolton-menk.com
www.bolton-menk.com

Cottage Grove
Where Pride and Prosperity Meet

DESIGNED
DRAWN
CHECKED
CLIENT PROJ. NO. 137045

| NO. | ISSUED FOR | DATE |
|---|---|---|

CITY OF COTTAGE GROVE
2026 PAVEMENT MANAGEMENT PROJECT
MNDOT PEDESTRIAN CURB RAMP DETAILS

SHEET C1.03

©Bolton & Menk, Inc. 2026, All Rights Reserved
H:\COTT\24X\137045000\CAD\C3D\137045C102.dwg 2/25/2026 6:24:40 AM

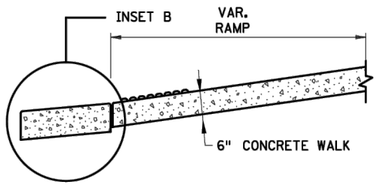


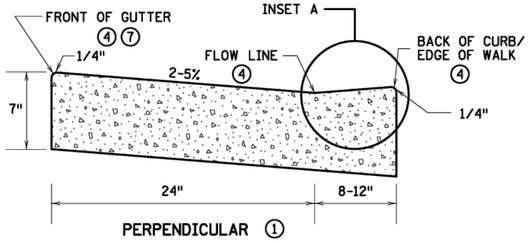


PERPENDICULAR ①

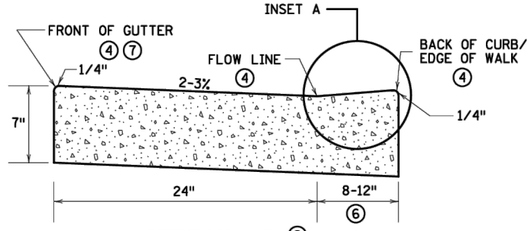


NON PERPENDICULAR ②

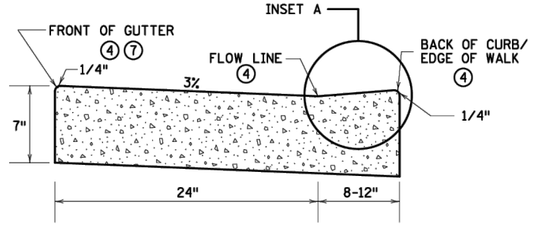


FOR CURB MACHINE PLACEMENT AROUND RADIUS ③
(REGARDLESS OF RAMP TYPE)

## PEDESTRIAN ACCESS ROUTE CURB & GUTTER DETAIL

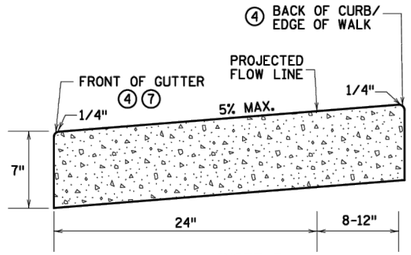


INSET B
OUTFLOW GUTTER ⑧

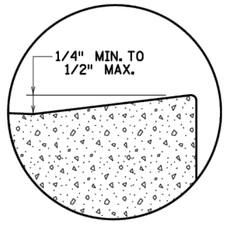


INSET A

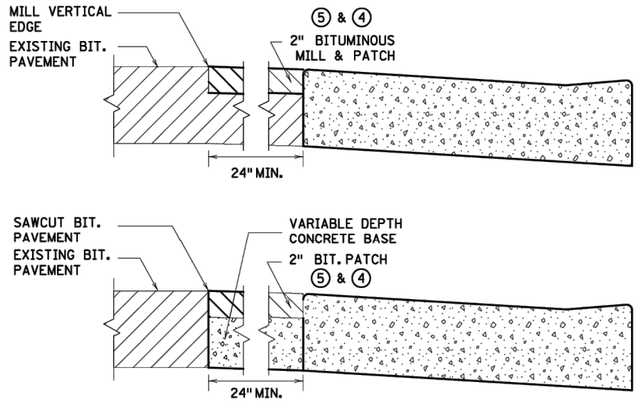


ONLY ALLOWED PER ENGINEER'S APPROVAL

## PAVEMENT TREATMENT OPTIONS IN FRONT OF CURB & GUTTER

FOR USE ON CURB RAMP RETROFITS

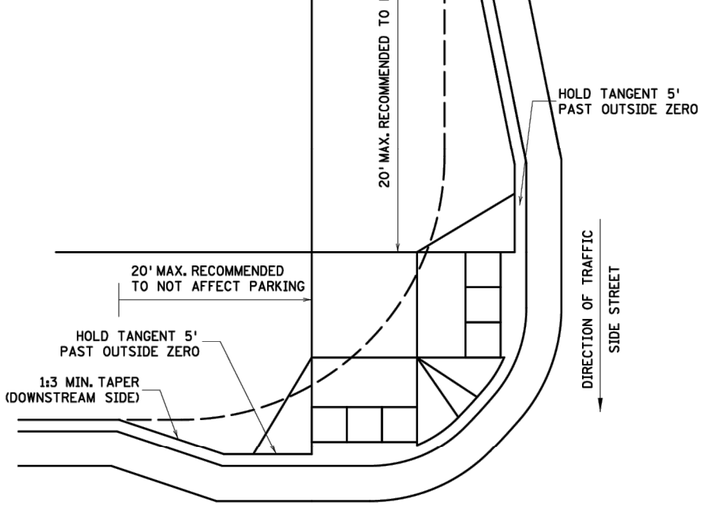


ADA CURB EXTENSION WITH COMPOUND RADIUS (BUMP OUT) ⑪

DIRECTION OF TRAFFIC
MAIN STREET

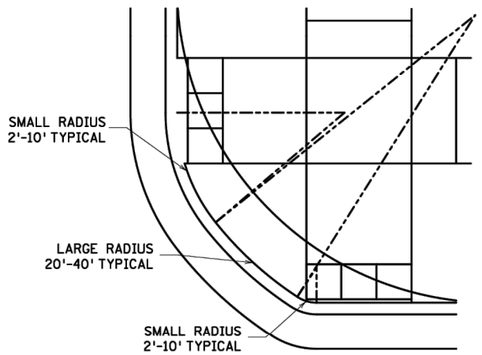


COMBINED DIRECTIONAL ⑩
(COMPOUND RADIUS)

**NOTES:**

POSITIVE FLOW LINE DRAINAGE SHALL BE MAINTAINED THROUGH THE PEDESTRIAN ACCESS ROUTE (PAR) AT A 2% MAXIMUM.

NO PONDING SHALL BE PRESENT IN THE PAR.

ANY VERTICAL LIP THAT OCCURS AT THE FLOW LINE SHALL NOT BE GREATER THAN 1/4 INCH.

① FOR USE AT CURB CUTS WHERE THE PEDESTRIAN'S PATH OF TRAVEL IS ASSUMED PERPENDICULAR TO THE GUTTER FLOW LINE. RAMP TYPES INCLUDE: PERPENDICULAR, TIERED PERPENDICULAR, PARALLEL, AND DIAGONAL RAMPS.

② FOR USE AT CURB RAMPS WHERE THE PEDESTRIAN'S PATH OF TRAVEL IS ASSUMED NON PERPENDICULAR TO THE GUTTER FLOW LINE. RAMP TYPES INCLUDE: FANS & DEPRESSED CORNERS.

③ BEGIN GUTTER SLOPE TRANSITION 10' OUTSIDE OF ALL CURB RAMPS.

④ THERE SHALL BE NO VERTICAL DISCONTINUITIES GREATER THAN 1/4".

⑤ ELEVATION CHANGE TAKES PLACE FROM THE EXISTING TO NEW FRONT OF GUTTER. PATCH IS USED TO MATCH THE NEW GUTTER FACE INTO THE EXISTING ROADWAY.

⑥ VARIABLE WIDTH FOR DIRECTIONAL CURB APPLICATIONS. SEE SHEET 2 FOR DIRECTIONAL CURB SLOPE REQUIREMENTS.

⑦ TOP FRONT OF GUTTER SHALL BE CONSTRUCTED FLUSH WITH PROPOSED ADJACENT PAVEMENT ELEVATION. TOP 1.5" OF THE GUTTER FACE MUST BE A FORMED EDGE. PAR GUTTER SHALL NOT BE OVERLAID.

⑧ SHOULD BE USED AT VERTICALLY CONSTRAINED AREAS WHEN AT A DRAINAGE HIGH POINT OR SUPER ELEVATED ROADWAY SEGMENTS.

⑨ DRILL AND GROUT NO. 4 EPOXY-COATED 18" LONG TIE BARS AT 30" CENTER TO CENTER INTO EXISTING CONCRETE PAVEMENT 1' MINIMUM FROM ALL JOINTS.

⑩ HELPS PROVIDE TWO SEPARATE RAMPS, REDUCES THE DOME SETBACK LENGTH AND MINIMIZES DIRECTIONAL CURB. THIS RADIUS DESIGN CLOSELY FOLLOWS THE TURNING VEHICLE PATH WHILE OPTIMIZING CURB RAMP LENGTH.

⑪ CURB EXTENSIONS SHOULD BE USED IN VERTICALLY CONSTRAINED AREAS, USUALLY IN DOWNTOWN ROADWAY SEGMENTS WHERE ON-STREET PARKING IS AVAILABLE. CURB EXTENSIONS SHOULD BE CONSIDERED FOR APS INTERSECTIONS WHERE SPACE IS LIMITED.
PUSH BUTTONS MUST MEET APS CRITERIA AS DESCRIBED IN THE PUSH BUTTON LOCATION DETAIL SHEET.

REVISION:

APPROVED: 11-04-2021
JEFFREY PERKINS
OPERATIONS DIVISION

MINNESOTA DEPARTMENT OF TRANSPORTATION

STANDARD PLAN 5-297.250 | 3 OF 6

APPROVED: 11-04-2021
REVISED:

THOMAS STYRBICKI
STATE DESIGN ENGINEER

# PEDESTRIAN CURB RAMP DETAILS

STATE PROJ. NO. (TH ) SHEET NO. OF SHEETS

BOLTON & MENK
3507 HIGH POINT DRIVE NORTH
BLDG. 1 - SUITE E130
OAKDALE, MN 55128
Phone: (651) 704-9970
Email: Oakdale@bolton-menk.com
www.bolton-menk.com

Cottage Grove
Where Pride and Prosperity Meet

| DESIGNED | NO. | ISSUED FOR | DATE |
|---|---|---|---|
| DRAWN | | | |
| CHECKED | | | |
| CLIENT PROJ. NO. 137045 | | | |

CITY OF COTTAGE GROVE
2026 PAVEMENT MANAGEMENT PROJECT
MNDOT PEDESTRIAN CURB RAMP DETAILS

SHEET C1.04

©Bolton & Menk, Inc. 2026. All Rights Reserved
H:\COTT\24X\137045000\CAD\C3D\137045C102.dwg 2/25/2026 6:25:19 AM

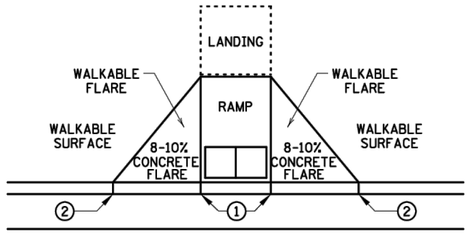


PAVED FLARES
ADJACENT TO WALKABLE SURFACE

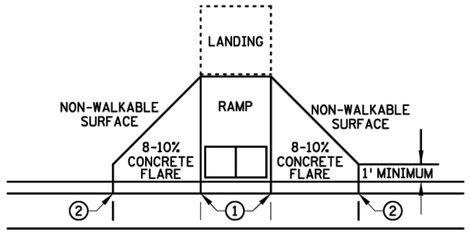


PAVED FLARES
ADJACENT TO NON-WALKABLE SURFACE

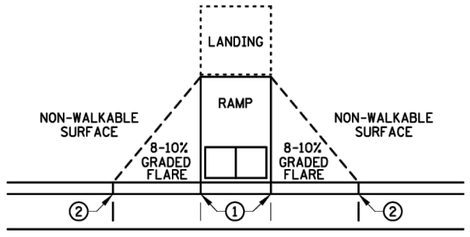


GRADED FLARES

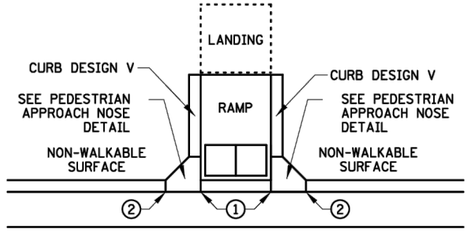


RETURNED CURB ④

TYPICAL SIDE TREATMENT OPTIONS ③ ⑩

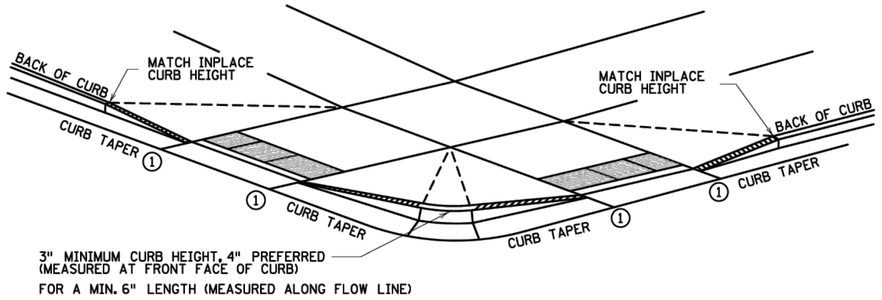


DETECTABLE EDGE WITH ⑦
CURB AND GUTTER

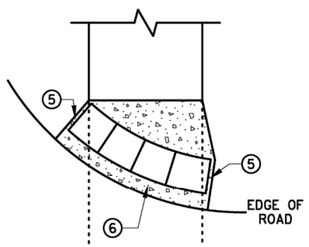


RADIAL DETECTABLE WARNING

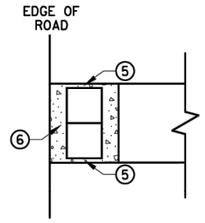


RECTANGULAR DETECTABLE WARNING

DETECTABLE EDGE WITHOUT CURB AND GUTTER

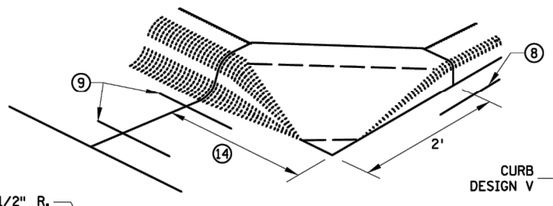


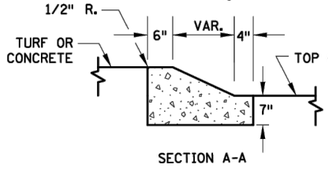


SECTION A-A

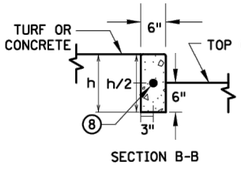


SECTION B-B

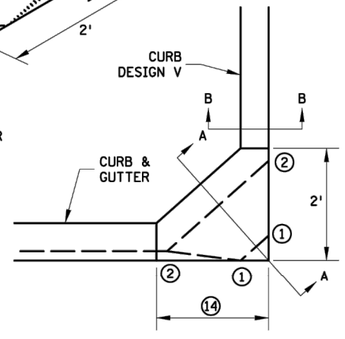


PEDESTRIAN APPROACH
NOSE DETAIL
(FOR RETURNED CURB
SIDE TREATMENT)

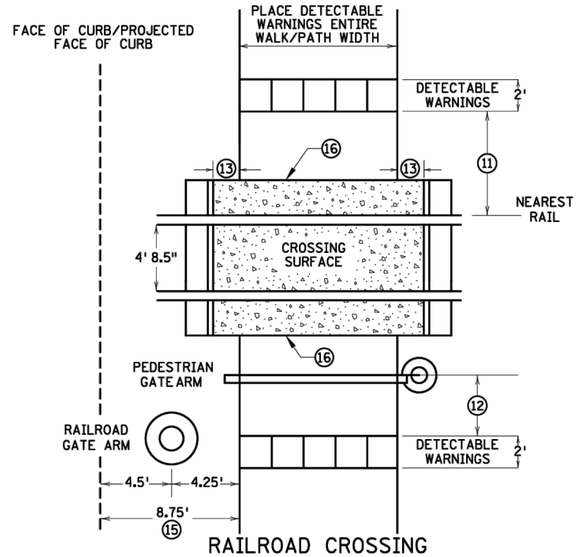


RAILROAD CROSSING
PLAN VIEW

**NOTES:**

INTERMEDIATE CURB HEIGHTS TAPER SHALL RISE AT 8-10% TO A MINIMUM 3 INCH CURB HEIGHT. INCREASE CURB TAPER LENGTH AT LESS THAN 8% OR REDUCE INTERMEDIATE CURB HEIGHT TO 2+ INCHES IF NECESSARY TO MATCH ADJACENT BOULEVARD OR SIDEWALK GRADES.

SEE STANDARD PLATE 7038 AND THIS SHEET FOR ADDITIONAL DETAILS ON DETECTABLE WARNING.

A WALKABLE SURFACE IS DEFINED AS A PAVED SURFACE ADJACENT TO A CURB RAMP WITHOUT RAISED OBSTACLES THAT COULD MISTAKENLY BE TRAVERSED BY A USER WHO IS VISUALLY IMPAIRED.

CONCRETE FLARE LENGTHS ADJACENT TO NON-WALKABLE SURFACES SHOULD BE LESS THAN 8' LONG MEASURED ALONG THE RAMPS FROM THE BACK OF CURB.

① 0" CURB HEIGHT. SEE INSET A ON SHEET 3 OF 6.

② FULL CURB HEIGHT.

③ SIDE TREATMENTS ARE APPLICABLE TO ALL RAMP TYPES AND SHOULD BE IMPLEMENTED AS NEEDED AS FIELD CONDITIONS DICTATE. THE ENGINEER SHALL DETERMINE THE RAMP SIDE TREATMENTS BASED ON MAINTENANCE OF BOTH ROADWAY AND SIDEWALK, ADJACENT PROPERTY CONSIDERATIONS, AND MITIGATING CONSTRUCTION IMPACTS.

④ TYPICALLY USED FOR MEDIANS AND ISLANDS.

⑤ WHEN NO CONCRETE FLARES ARE PROPOSED, THE CONCRETE WALK SHALL BE FORMED AND CONSTRUCTED PERPENDICULAR TO THE EDGE OF ROADWAY. MAINTAIN 3" MAX. BETWEEN EDGE OF DOMES AND EDGE OF CONCRETE.

⑥ IF NO CURB AND GUTTER IS PLACED IN RURAL SECTIONS, DETECTABLE WARNINGS SHALL BE PLACED 1' FROM THE EDGE OF BITUMINOUS ROADWAY AND/OR BITUMINOUS SHARED-USE PATH TO PROVIDE VISUAL CONTRAST.

⑦ ALL CONSTRUCTED CURBS MUST HAVE A CONTINUOUS DETECTABLE EDGE FOR THE VISUALLY IMPAIRED. THIS DETECTABLE EDGE REQUIRES DETECTABLE WARNINGS WHEREVER THERE IS ZERO-INCH HIGH CURB. CURB TAPERS ARE CONSIDERED A DETECTABLE EDGE WHEN THE TAPER STARTS WITHIN 3" OF THE EDGE OF THE DETECTABLE WARNINGS. AND UNIFORMLY RISES TO A 3-INCH MINIMUM CURB HEIGHT. ANY CURB NOT PART OF A CURB TAPER AND LESS THAN 3 INCHES IN HEIGHT IS NOT CONSIDERED A DETECTABLE EDGE AND THEREFORE IS NOT COMPLIANT WITH ACCESSIBILITY STANDARDS.

⑧ DRILL AND GROUT 1 - NO. 4 12" LONG REINFORCEMENT BAR (EPOXY COATED) WITH 3" MIN. COVER. REINFORCEMENT BARS ARE NOT NEEDED IF THE APPROACH NOSE IS POURED INTEGRAL WITH THE V CURB.

⑨ DRILL AND GROUT 2 - NO. 4 12" LONG REINFORCEMENT BARS (EPOXY COATED) WITH 3" MIN. COVER. REINFORCEMENT BARS ARE NOT NEEDED IF THE APPROACH NOSE IS POURED INTEGRAL WITH THE CURB AND GUTTER.

⑩ SIDE TREATMENT EXAMPLES SHOWN ARE WHEN THE INITIAL LANDING IS APPROXIMATELY LEVEL WITH THE FULL HEIGHT CURB (I.E. 6' LONG RAMP FOR 6" HIGH CURB). WHEN THE INITIAL LANDING IS MORE THAN 1" BELOW FULL HEIGHT CURB REFER TO SHEETS 1 & 2 TO MODIFY THE CURB HEIGHT TAPERS AND MAINTAIN POSITIVE BOULEVARD DRAINAGE. CONSTRUCT THESE TAPERS AT 0"-3" AT 8-10%, THEN LESS THAN 5% FROM 3" CURB TO FULL CURB HEIGHT.

⑪ NEAREST EDGE OF DETECTABLE WARNING SURFACES SHALL BE PLACED 12' MINIMUM TO 15' MAXIMUM FROM THE NEAREST RAIL. FOR SKEWED RAILWAYS IN NO INSTANCE SHALL THE DETECTABLE WARNING BE CLOSER THAN 12' MEASURED PERPENDICULAR TO THE NEAREST RAIL.

⑫ WHEN PEDESTRIAN GATES ARE PROVIDED, DETECTABLE WARNING SURFACES SHALL BE PLACED ON THE SIDE OF THE GATES OPPOSITE THE RAIL, 2' FROM THE APPROACHING SIDE OF THE GATE ARM. THIS CRITERIA GOVERNS OVER NOTE ⑪.

⑬ CROSSING SURFACE SHALL EXTEND 2' MINIMUM PAST THE OUTSIDE EDGE OF WALK OR SHARED-USE PATH.

⑭ 3' FOR MEDIANS AND SPLITTER ISLANDS. NOSE CAN BE REDUCED TO 2' ON FREE RIGHT ISLANDS.

⑮ SIDEWALK TO BE PLACED 8.75' MIN. FROM THE FACE OF CURB/PROJECTED FACE OF CURB. THIS ENSURES MIN. CLEARANCE BETWEEN THE SIDEWALK AND GATE ARM COUNTERWEIGHT SUPPORTS.

⑯ CONSTRUCT WITH EXPANSION MATERIAL PER MNDOT SPECIFICATION 3702 TYPES A-E. EXPANSION MATERIAL SHALL MATCH FULL HEIGHT OF ADJACENT CONCRETE.

REVISION:

APPROVED: 11-04-2021
JEFFREY J. PERKINS
OPERATIONS DIVISION

MINNESOTA DEPARTMENT OF TRANSPORTATION

STANDARD PLAN 5-297.250 | 4 OF 6

APPROVED: 11-04-2021
REVISED:

THOMAS STYRBICKI
STATE DESIGN ENGINEER

# PEDESTRIAN CURB RAMP DETAILS

STATE PROJ. NO. (TH ) SHEET NO. OF SHEETS


BOLTON & MENK
3507 HIGH POINT DRIVE NORTH
BLDG. 1 - SUITE E130
OAKDALE, MN 55128
Phone: (651) 704-9970
Email: Oakdale@bolton-menk.com
www.bolton-menk.com


Cottage Grove
Where Pride and Prosperity Meet

| DESIGNED | NO. | ISSUED FOR | DATE |
|---|---|---|---|
| DRAWN | | | |
| CHECKED | | | |
| CLIENT PROJ. NO. 137045 | | | |

CITY OF COTTAGE GROVE
2026 PAVEMENT MANAGEMENT PROJECT
MNDOT PEDESTRIAN CURB RAMP DETAILS

SHEET C1.05


©Bolton & Menk, Inc. 2026. All Rights Reserved
H:\COT\2X\137045000\CAD\C3D\137045C102.dwg 2/25/2026 6:26:28 AM

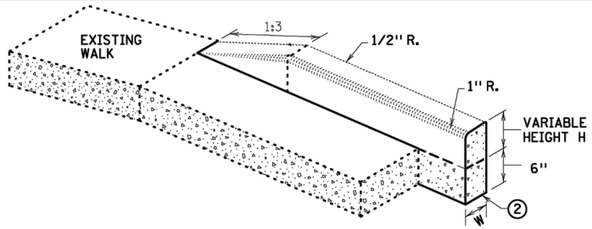


V CURB ADJACENT TO LANDSCAPE

CURB WITHIN SIDEWALK LIMITS

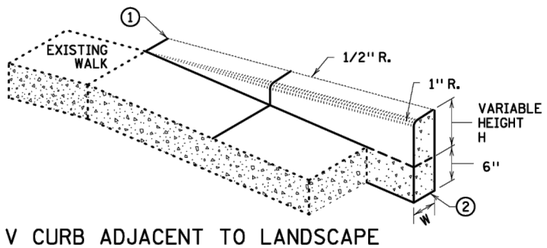


V CURB ADJACENT TO LANDSCAPE

CURB OUTSIDE SIDEWALK LIMITS

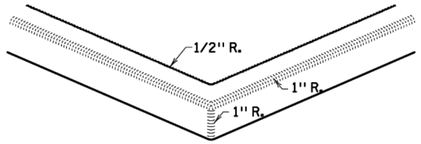


V CURB INTERSECTION

| CONCRETE CURB DESIGN V | |
|---|---|
| CURB HEIGHT H | CURB WIDTH W |
| <6" | 4" |
| ≥6" | 6" |

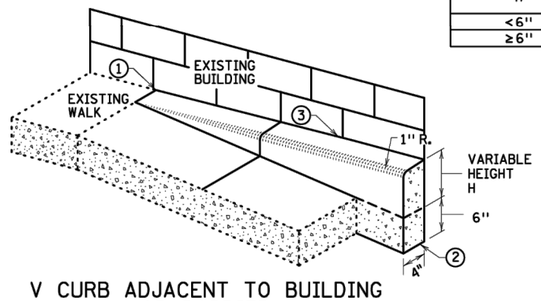


V CURB ADJACENT TO BUILDING OR BARRIER

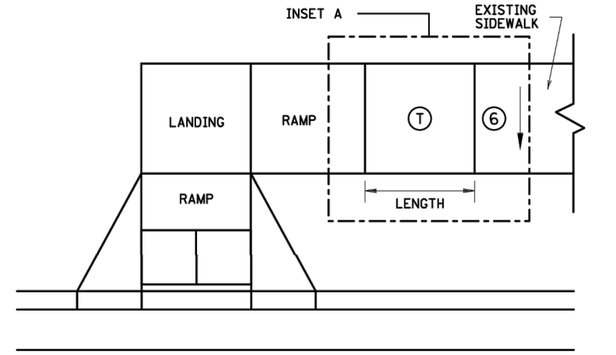


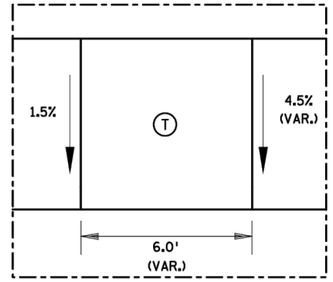


TRANSITION PANEL ④⑤

INSET A

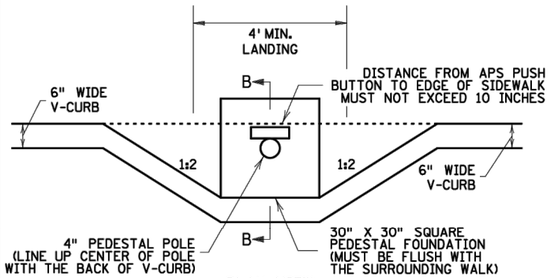


PLAN VIEW

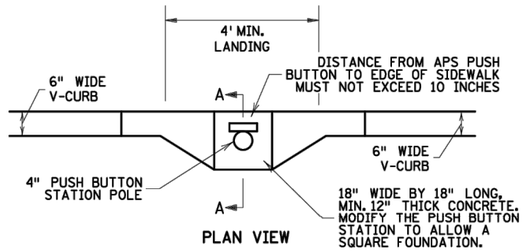


PLAN VIEW

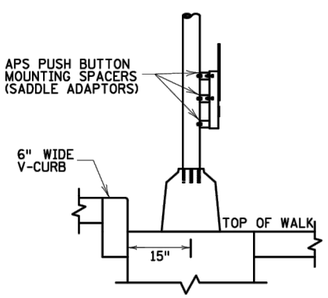


SECTION B-B

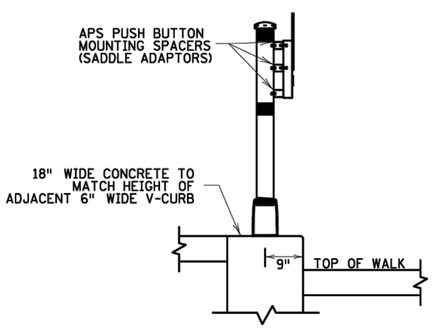


SECTION A-A

SIGNAL PEDESTAL & PUSH BUTTON (V-CURB)

PUSH BUTTON STATION (V-CURB)

**NOTES:**

A WALKABLE FLARE IS AN 8-10% CONCRETE FLARE THAT IS REQUIRED WHEN THE FLARE IS ADJACENT TO A WALKABLE SURFACE, OR WHEN THE PEDESTRIAN PATH OF TRAVEL OF A PUSH BUTTON TRAVERSES THE FLARE.

ALL V CURB CONTRACTION JOINTS SHALL MATCH CONCRETE WALK JOINTS.

WHERE RIGHT-OF-WAY ALLOWS, USE OF V CURB SHOULD BE MINIMIZED. GRADING ADJACENT TURF OR SLOPING ADJACENT PAVEMENT IS PREFERRED.

V CURB SHALL BE PLACED OUTSIDE THE SIDEWALK LIMITS WHEN RIGHT OF WAY ALLOWS.

V CURB NEXT TO BUILDING SHALL BE A 4" WIDTH AND SHALL MATCH PREVIOUS TOP OF SIDEWALK ELEVATIONS.

① END TAPERS AT TRANSITION SECTION SHALL MATCH INPLACE SIDEWALK GRADES.

② ALL V CURB SHALL MATCH BOTTOM OF ADJACENT WALK.

③ CONSTRUCT USING APPROVED EXPANSION MATERIAL PER MNDOT TYPE A-E EXPANSION. LEAVE A MINIMUM ½" TOP GAP AND SEAL WITH MNDOT APPROVED SILICONE PER MNDOT SPEC 3722.

④ THE MAX. RATE OF CROSS SLOPE TRANSITIONING IS 1' LINEAR FOOT OF SIDEWALK PER HALF PERCENT CROSS SLOPE. WHEN PAR WIDTH IS GREATER THAN 6' OR THE RUNNING SLOPE IS GREATER THAN 5%, DOUBLE THE CALCULATED TRANSITION LENGTH.

⑤ TRANSITION PANELS ARE TO ONLY BE USED AFTER THE RAMP, OR IF NEEDED, LANDING ARE AT THE FULL CURB HEIGHT (TYPICAL SECTION).

⑥ EXISTING CROSS SLOPE GREATER THAN 2.0%.

**LEGEND**

THESE LONGITUDINAL SLOPE RANGES SHALL BE THE STARTING POINT. IF SITE CONDITIONS WARRANT, LONGITUDINAL SLOPES UP TO 8.3% OR FLATTER ARE ALLOWED.

Ⓢ INDICATES PEDESTRIAN RAMP - SLOPE SHALL BE BETWEEN 5.0% MINIMUM AND 8.3% MAXIMUM IN THE DIRECTION SHOWN AND THE CROSS SLOPE SHALL NOT EXCEED 2.0%.

LANDING AREA - 4' X 4' MIN. (5' X 5' MIN. PREFERRED) DIMENSIONS AND MAX 2.0% SLOPE IN ALL DIRECTIONS. LANDING SHALL BE FULL WIDTH OF INCOMING PARS.

Ⓣ TRANSITION PANEL(S) - TO BE USED FOR TRANSITIONING THE CROSS-SLOPE OF A RAMP TO THE EXISTING WALK CROSS-SLOPE. RATE OF TRANSITION SHOULD BE 0.5% PER 1 LINEAR FOOT OF WALK. SEE THIS SHEET FOR ADDITIONAL INFORMATION.

REVISION:

APPROVED: 11-04-2021

JEFFREY J. PERKINS
OPERATIONS DIVISION

MINNESOTA DEPARTMENT OF TRANSPORTATION

STANDARD PLAN 5-297.250 | 5 OF 6

APPROVED: 11-04-2021
REVISED:

THOMAS STYRBICKI
STATE DESIGN ENGINEER

# PEDESTRIAN CURB RAMP DETAILS

STATE PROJ. NO. (TH ) SHEET NO. OF SHEETS

©Bolton & Menk, Inc. 2026. All Rights Reserved
H:\CITY\24X\137045000\CAD\CSD\137045C102.dwg 2/25/2026 6:27:00 AM

BOLTON & MENK
3507 HIGH POINT DRIVE NORTH
BLDG. 1 - SUITE E130
OAKDALE, MN 55128
Phone: (651) 704-9970
Email: Oakdale@bolton-menk.com
www.bolton-menk.com

Cottage Grove
Where Pride and Prosperity Meet

| DESIGNED | NO. | ISSUED FOR | DATE |
|---|---|---|---|
| DRAWN | | | |
| CHECKED | | | |
| CLIENT PROJ. NO. 137045 | | | |

CITY OF COTTAGE GROVE
2026 PAVEMENT MANAGEMENT PROJECT
MNDOT PEDESTRIAN CURB RAMP DETAILS

SHEET C1.06

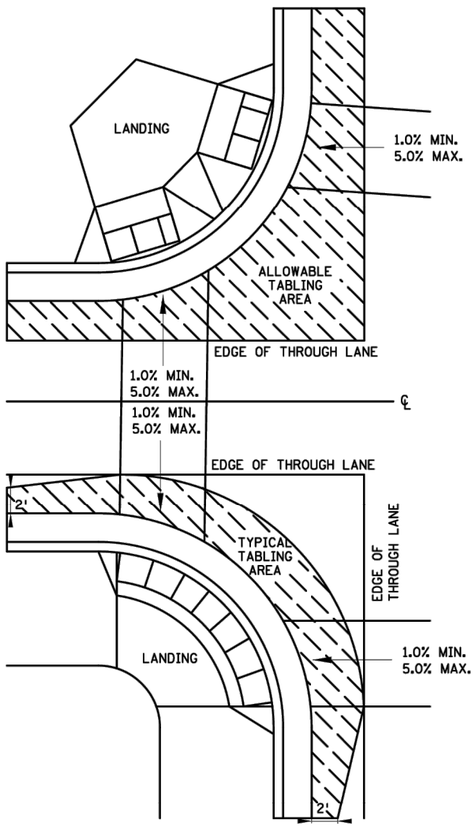


CURB LINE AND ROAD CROSSING ADJUSTMENTS

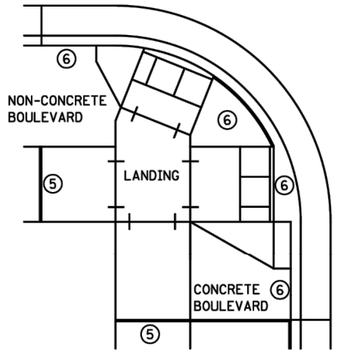


EXPANSION MATERIAL PLACEMENT
FOR CONCRETE ROADWAYS

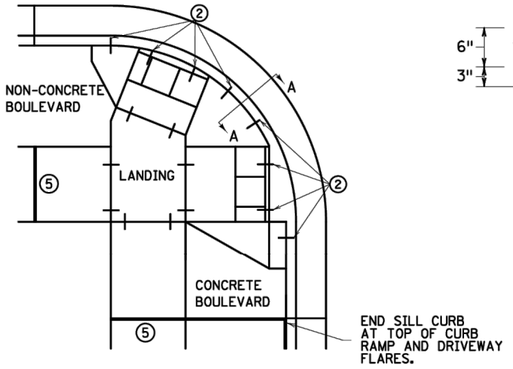


CURB LINE REINFORCEMENT ④
PLACEMENT ON BITUMINOUS ROADWAYS

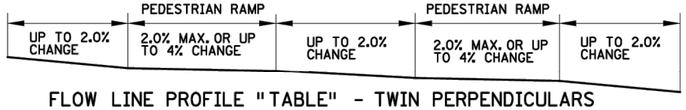


FLOW LINE PROFILE "TABLE" - TWIN PERPENDICULARS

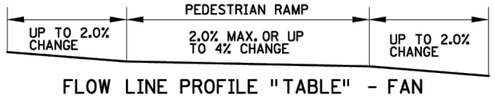


FLOW LINE PROFILE "TABLE" - FAN

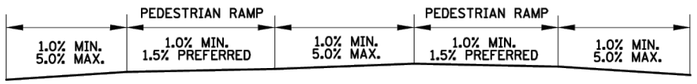


FLOW LINE PROFILE RAISE - TWIN PERPENDICULARS

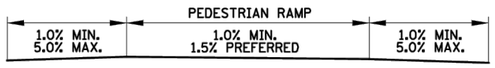


FLOW LINE PROFILE RAISE - FAN

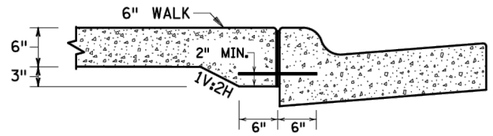


SECTION VIEW A-A
THICKENED SECTION
THROUGH CURB RAMP FLARES

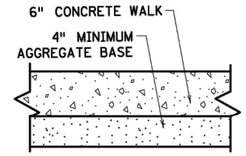


TYPICAL SIDEWALK SECTION
WITHIN INTERSECTION CORNER

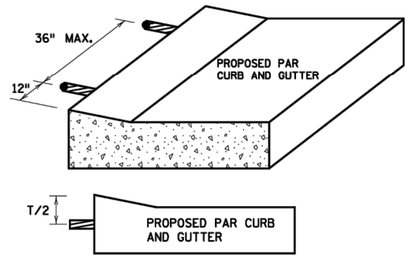


CURB RAMP REINFORCEMENT DETAILS ②④

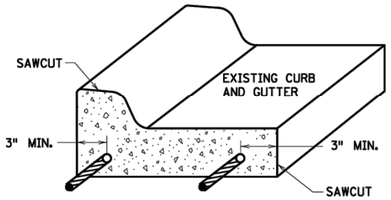


CURB AND GUTTER
REINFORCEMENT ③

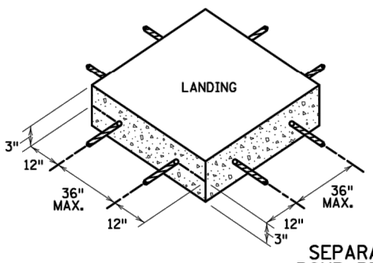


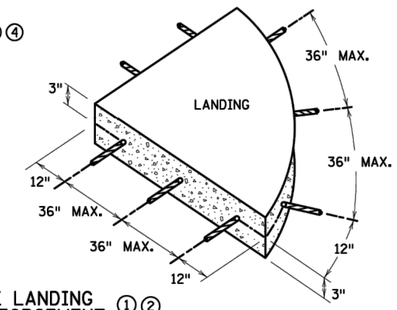


SEPARATE LANDING
POUR REINFORCEMENT ①②

**GENERAL NOTES:**

"TABLING" OF CROSSWALKS MEANS MAINTAINING LESS THAN 2% CROSS SLOPE WITHIN A CROSSWALK, IS REQUIRED WHEN A ROADWAY IS IN A STOP OR YIELD CONDITION AND THE PROJECT SCOPE ALLOWS.

RECONSTRUCTION PROJECTS: ON FULL PAVEMENT REPLACEMENT PROJECTS "TABLING" OF ENTIRE CROSSWALK SHALL OCCUR WHEN FEASIBLE.

MILL & OVERLAY PROJECTS: "TABLING" OF FLOW LINES, IN FRONT OF THE PEDESTRIAN RAMP, IS REQUIRED WHEN THE EXISTING FLOW LINE IS GREATER THAN 2%. WARPING OF THE BITUMINOUS PAVEMENT CAN NOT EXTEND INTO THE THROUGH LANE. TABLE THE FLOW LINE TO 2% OR AS MUCH AS POSSIBLE WHILE ADHERING TO THE FOLLOWING CRITERIA:

1) 1.0% MIN. CROSS-SLOPE OF THE ROAD
2) 5.0% MAX. CROSS-SLOPE OF THE ROAD
3) "TABLE" FLOW LINE UP TO 4% CHANGE FROM EXISTING SLOPE IN FRONT OF PEDESTRIAN RAMP
4) UP TO 2% CHANGE IN FLOW LINE FROM EXISTING SLOPE BEYOND THE PEDESTRIAN CURB RAMP

STAND-ALONE ADA RETROFITS: FOLLOW MILL & OVERLAY CRITERIA ABOVE HOWEVER ALL PAVEMENT WARPING IS DONE WITH BITUMINOUS PATCHING ON BITUMINOUS ROADWAYS AND FULL-DEPTH APRON REPLACEMENT ON CONCRETE ROADWAYS.

RAISING OF CURB LINES SHOULD OCCUR IN VERTICALLY CONSTRAINED AREAS. RAISE THE CURB LINES ENOUGH TO ALLOW COMPLIANT RAMPS OR AS MUCH AS POSSIBLE WHILE ADHERING TO THE FOLLOWING CRITERIA:

1) 1.0% MIN. AND 5.0% MAXIMUM CROSS-SLOPE OF THE ROAD
2) 1.0% MIN. FLOW LINE (ON EITHER SIDE OF PEDESTRIAN RAMP) TO MAINTAIN POSITIVE DRAINAGE
3) 5.0% RECOMMENDED MAX. FLOW LINE
4) LONGITUDINAL THROUGH LANE ROADWAY TAPERS SHOULD BE 1" VERTICAL PER 15' HORIZONTAL

**NOTES:**

① TO ENSURE RAMPS AND LANDINGS ARE PROPERLY CONSTRUCTED, ALL INITIAL LANDINGS AT A TOP OF A RAMPED SURFACE (RUNNING SLOPE GREATER THAN 2%) SHALL BE FORMED AND PLACED SEPARATELY IN AN INDEPENDENT CONCRETE POUR. FOLLOW SIDEWALK REINFORCEMENT DETAILS ON THIS SHEET FOR ALL SEPARATELY POURED INITIAL LANDINGS.

② DRILL AND GROUT NO. 4 12" LONG REINFORCEMENT BARS (EPOXY COATED) AT 36" MAXIMUM CENTER TO CENTER MINIMUM 12" SPACING FROM CONSTRUCTION JOINTS. BARS TO BE ADJUSTED TO MATCH RAMP GRADE. BARS TO BE PAID BY EACH.

③ DRILL AND GROUT 2 - NO. 4 X 12" LONG (6" EMBEDDED) REINFORCEMENT BARS (EPOXY COATED). REINFORCEMENT REQUIRED FOR ALL CONSTRUCTION JOINTS. BARS TO BE PAID BY EACH.

④ THIS CURB LINE REINFORCEMENT DETAIL SHALL BE USED ON BITUMINOUS ROADWAYS. FOR CONCRETE ROADWAYS, SEE NOTE 6.

⑤ CONSTRUCT WITH EXPANSION MATERIAL PER MNDOT SPECIFICATION 3702 TYPES A-E. EXPANSION MATERIAL SHALL MATCH FULL HEIGHT OF ADJACENT CONCRETE.

⑥ USE AN APPROVED TYPE F (1/4 INCH THICK) SEPARATION MATERIAL. SEPARATION MATERIAL SHALL MATCH FULL HEIGHT DIMENSION OF ADJACENT CONCRETE.

REVISION:

APPROVED: 11-04-2021
JEFFREY PERKINS
OPERATIONS DIVISION

MINNESOTA DEPARTMENT OF TRANSPORTATION

THOMAS STYRBICKI
STATE DESIGN ENGINEER

STANDARD PLAN 5-297.250 | 6 OF 6

APPROVED: 11-04-2021
REVISED:

# PEDESTRIAN CURB RAMP DETAILS

STATE PROJ. NO. (TH ) SHEET NO. OF SHEETS

BOLTON & MENK
3507 HIGH POINT DRIVE NORTH
BLDG. 1 - SUITE E130
OAKDALE, MN 55128
Phone: (651) 704-9970
Email: Oakdale@bolton-menk.com
www.bolton-menk.com

Cottage Grove
Where Pride and Prosperity Meet

DESIGNED
DRAWN
CHECKED
CLIENT PROJ. NO. 137045

| NO. | ISSUED FOR | DATE |
|---|---|---|

CITY OF COTTAGE GROVE
2026 PAVEMENT MANAGEMENT PROJECT
MNDOT PEDESTRIAN CURB RAMP DETAILS

SHEET C1.07

©Bolton & Menk, Inc. 2026. All Rights Reserved
H:\COTT\2AX\137045000\CAD\C3D\137045C102.dwg 2/25/2026 6:25:54 AM

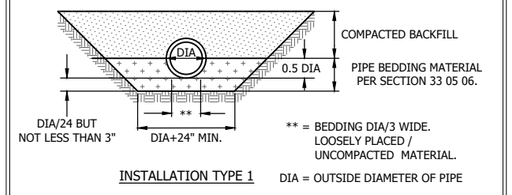


| | | |
|---|---|---|
| Cottage Grove | STANDARD DETAILS<br>PIPE FOUNDATION & BEDDING METHODS FOR RCP & DIP<br>COTTAGE GROVE, MINNESOTA | JANUARY 2026<br>PLATE NO. BED-2 |

48_BED2.DWG

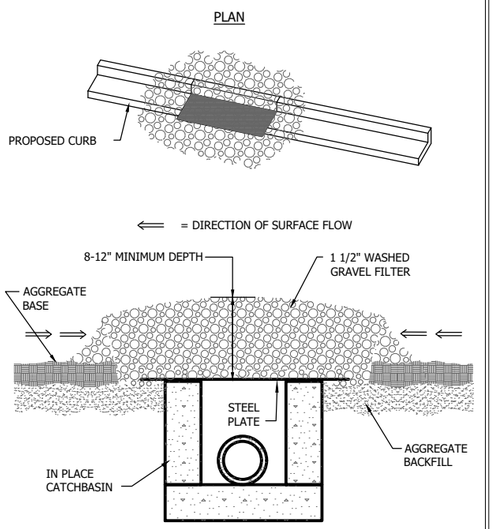


| | | |
|---|---|---|
| Cottage Grove | STANDARD DETAILS<br>INLET PROTECTION ROCK FILTER FOR CATCH BASIN<br>COTTAGE GROVE, MINNESOTA | JANUARY 2026<br>PLATE NO. ERO-8 |

48_ERO8.DWG

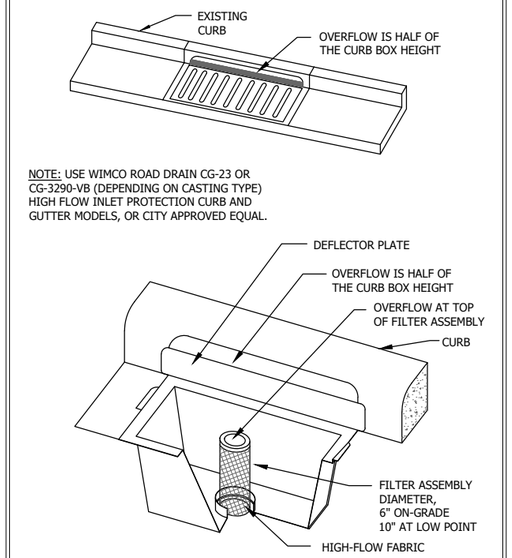


| | | |
|---|---|---|
| Cottage Grove | STANDARD DETAILS<br>INLET PROTECTION CATCH BASIN INSERT<br>COTTAGE GROVE, MINNESOTA | JANUARY 2026<br>PLATE NO. ERO-9 |

48_ERO9.DWG

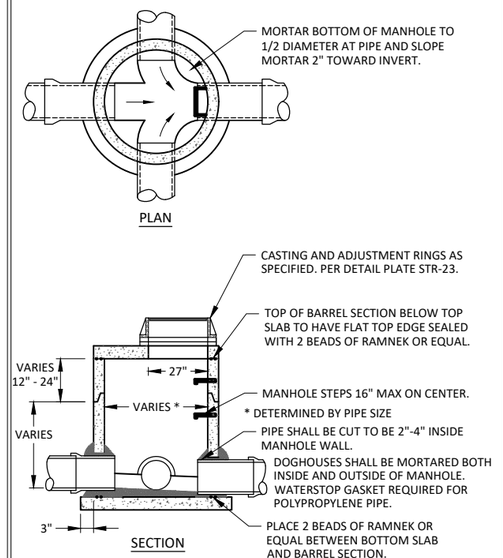


| | | |
|---|---|---|
| Cottage Grove | STANDARD DETAILS<br>STORM SEWER JUNCTION MANHOLE WITH REINFORCED TOP SLAB<br>COTTAGE GROVE, MINNESOTA | JANUARY 2026<br>PLATE NO. STO-3 |

137045C108.dwg

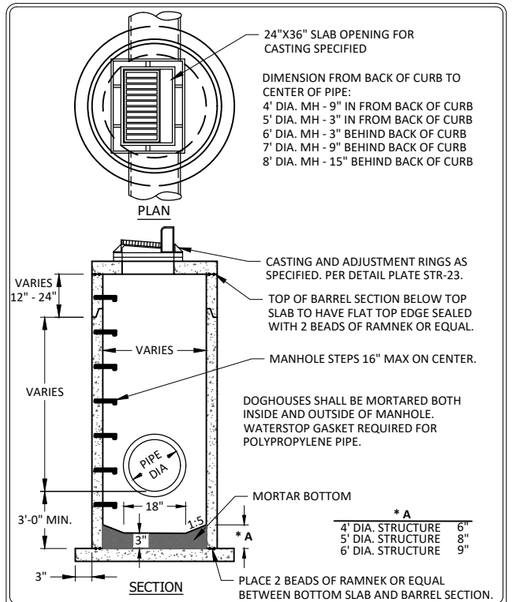


| | | |
|---|---|---|
| Cottage Grove | STANDARD DETAILS<br>CATCH BASIN MANHOLE WITH SUMP<br>COTTAGE GROVE, MINNESOTA | JANUARY 2026<br>PLATE NO. STO-6 |

137045C108.dwg

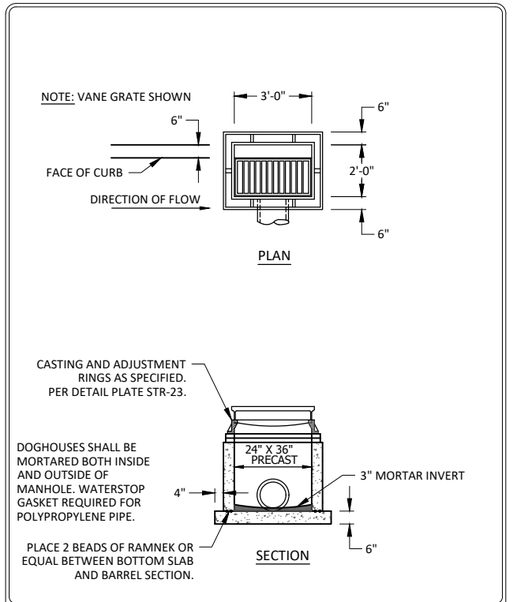


| | | |
|---|---|---|
| Cottage Grove | STANDARD DETAILS<br>CATCH BASIN<br>COTTAGE GROVE, MINNESOTA | JANUARY 2026<br>PLATE NO. STO-7 |

137045C108.dwg

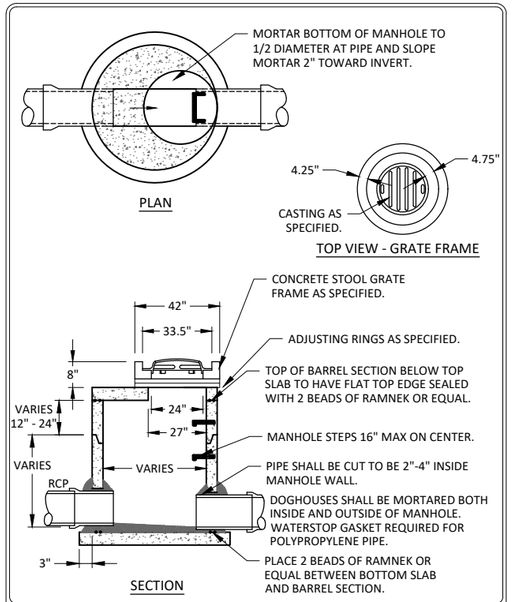


| | | |
|---|---|---|
| Cottage Grove | STANDARD DETAILS<br>OFF STREET CATCH BASIN WITH CONCRETE STOOL GRATE FRAME<br>COTTAGE GROVE, MINNESOTA | JANUARY 2026<br>PLATE NO. STO-9 |

137045C108.dwg

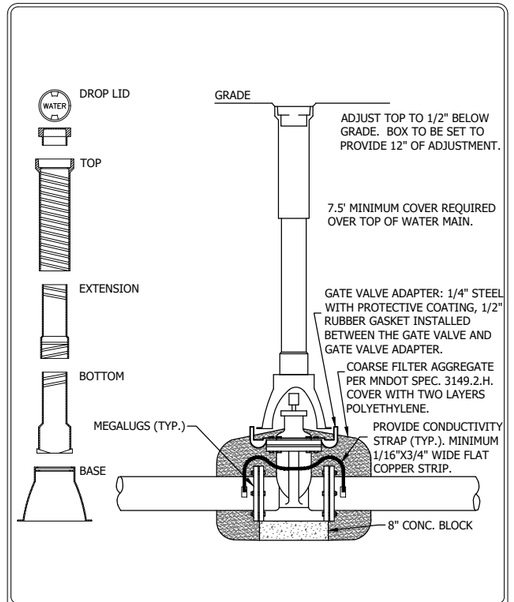


| | | |
|---|---|---|
| Cottage Grove | STANDARD DETAILS<br>GATE VALVE AND BOX INSTALLATION<br>COTTAGE GROVE, MINNESOTA | JANUARY 2026<br>PLATE NO. WAT-3 |

48_WAT3.DWG

©Bolton & Menk, Inc. 2026. All Rights Reserved
H:\COTT\24X1370450001\CAD\C3D\137045C108.dwg 2/25/2026 6:27:33 AM

I HEREBY CERTIFY THAT THIS PLAN, SPECIFICATION, OR REPORT WAS PREPARED BY ME OR UNDER MY DIRECT SUPERVISION AND THAT I AM A DULY LICENSED PROFESSIONAL ENGINEER UNDER THE LAWS OF THE STATE OF MINNESOTA.

MICHAEL J BOEK
LIC. NO. 44576 DATE MM/DD/YYYY

BOLTON & MENK
3507 HIGH POINT DRIVE NORTH
BLDG. 1 - SUITE E130
OAKDALE, MN 55128
Phone: (651) 704-9970
Email: Oakdale@bolton-menk.com
www.bolton-menk.com

Cottage Grove — Where Pride and Prosperity Meet

| | |
|---|---|
| DESIGNED | ANO |
| DRAWN | BNM |
| CHECKED | MJB |
| CLIENT PROJ. NO. | 137045 |

| NO. | ISSUED FOR | DATE |
|---|---|---|
| | | |

CITY OF COTTAGE GROVE
2026 PAVEMENT MANAGEMENT PROJECT
STANDARD DETAIL PLATES

SHEET C1.08

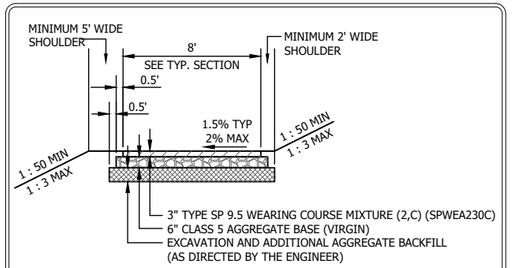


BITUMINOUS TRAIL

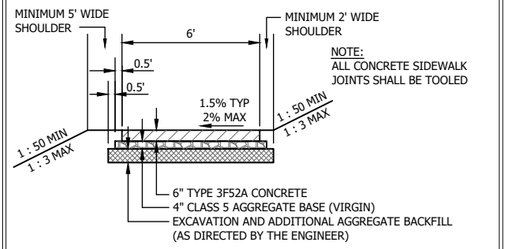


CONCRETE SIDEWALK

STANDARD DETAILS
TYPICAL BITUMINOUS TRAIL AND CONCRETE SIDEWALK SECTIONS
COTTAGE GROVE, MINNESOTA

JANUARY 2026

PLATE NO. STR-9

48_STR9.DWG

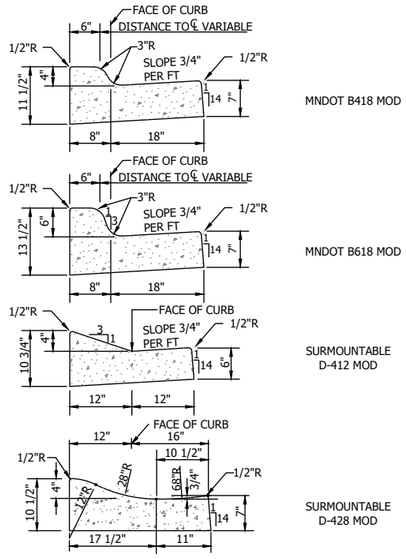


STANDARD DETAILS
CURB AND GUTTER
COTTAGE GROVE, MINNESOTA

JANUARY 2026

PLATE NO. STR-10

48_STR10.DWG

NOTES:
1. ALL NEW AND EXISTING WATER AND SEWER SERVICE LOCATIONS SHALL BE MARKED IN CURB AS SHOWN. STAMPING OF SERVICE LOCATIONS SHALL BE CONSIDERED INCIDENTAL TO THE PRICE OF CURB.
2. CONCRETE CURB PANELS WITH W'S AND S'S NOT PLACED BY SPECIFIED STAMP WILL NOT BE ACCEPTED.

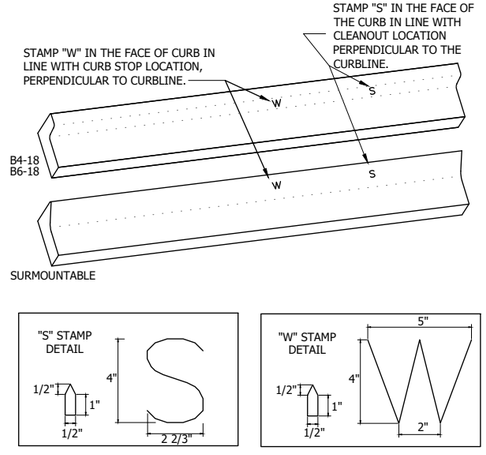


STANDARD DETAILS
WATER AND SEWER SERVICE LOCATION STAMP IN CURB
COTTAGE GROVE, MINNESOTA

JANUARY 2025

PLATE NO. STR-11

48_STR11.DWG

NOTE:
SURMOUNTABLE CURB & GUTTER TO BE FORMED INTO A B618 TYPE AT CATCHBASIN.

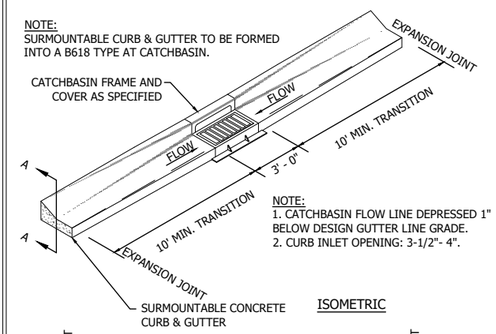


ISOMETRIC

NOTE:
1. CATCHBASIN FLOW LINE DEPRESSED 1" BELOW DESIGN GUTTER LINE GRADE.
2. CURB INLET OPENING: 3-1/2"- 4".

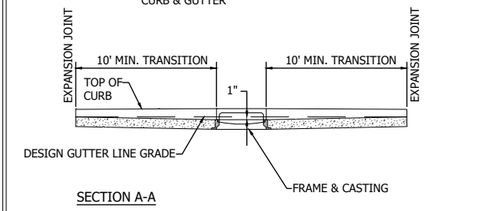


SECTION A-A

STANDARD DETAILS
SURMOUNTABLE CURB AND GUTTER CONSTRUCTION AT CATCHBASIN
COTTAGE GROVE, MINNESOTA

JANUARY 2026

PLATE NO. STR-13

48_STR13.DWG

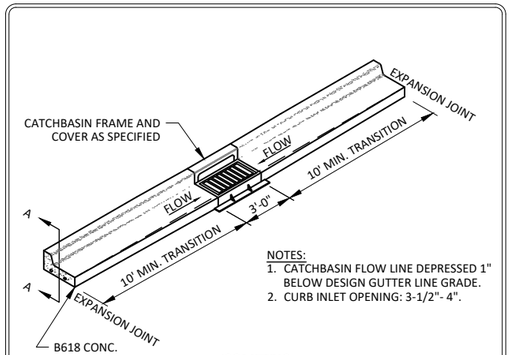


ISOMETRIC

NOTES:
1. CATCHBASIN FLOW LINE DEPRESSED 1" BELOW DESIGN GUTTER LINE GRADE.
2. CURB INLET OPENING: 3-1/2"- 4".

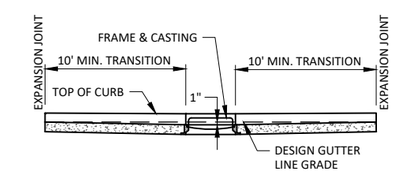


SECTION A-A

STANDARD DETAILS
B618 CURB AND GUTTER CONSTRUCTION AT CATCHBASIN
COTTAGE GROVE, MINNESOTA

JANUARY 2025

PLATE NO. STR-14

137045C108.dwg

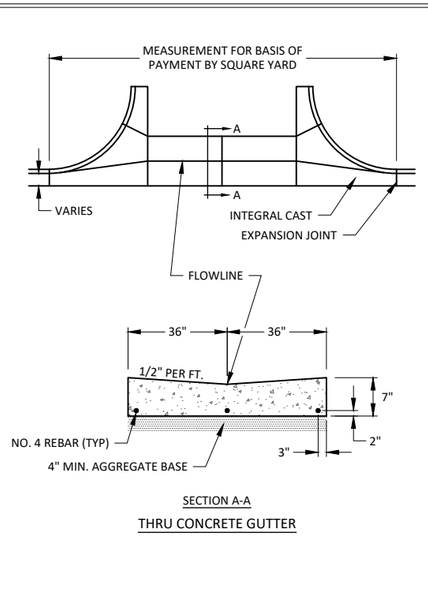


SECTION A-A

THRU CONCRETE GUTTER

STANDARD DETAILS
CONCRETE VALLEY GUTTER
COTTAGE GROVE, MINNESOTA

JANUARY 2026

PLATE NO. STR-16

137045C108.dwg

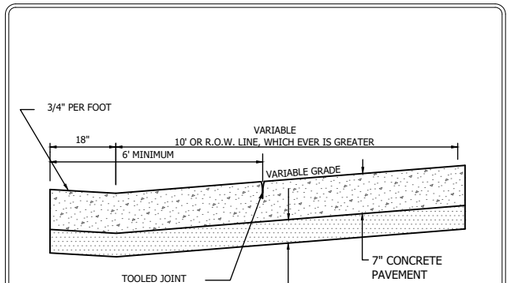


SECTION A-A
NO SCALE

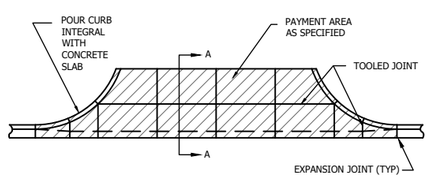


PLAN
NO SCALE

STANDARD DETAILS
CONCRETE DRIVEWAY APRON COMMERCIAL
COTTAGE GROVE, MINNESOTA

JANUARY 2026

PLATE NO. STR-17

48_STR17.DWG

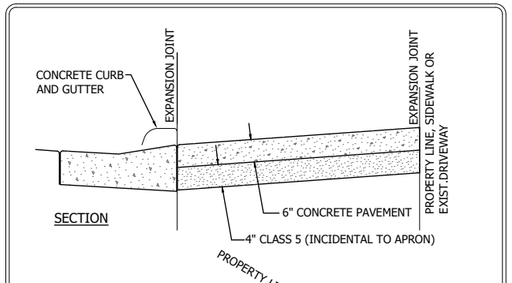


SECTION

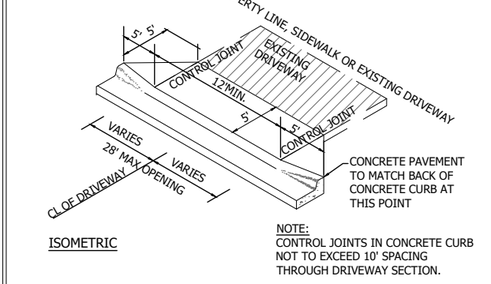


ISOMETRIC

NOTE:
CONTROL JOINTS IN CONCRETE CURB NOT TO EXCEED 10' SPACING THROUGH DRIVEWAY SECTION.

STANDARD DETAILS
CONCRETE DRIVEWAY APRON RESIDENTIAL
COTTAGE GROVE, MINNESOTA

JANUARY 2026

PLATE NO. STR-18

48_STR18.DWG

©Bolton & Menk, Inc. 2026. All Rights Reserved
H:\CITY\24X\137045000\CAD\C3D\137045C108.dwg 2/25/2026 8:01:17 AM

I HEREBY CERTIFY THAT THIS PLAN, SPECIFICATION, OR REPORT WAS PREPARED BY ME OR UNDER MY DIRECT SUPERVISION AND THAT I AM A DULY LICENSED PROFESSIONAL ENGINEER UNDER THE LAWS OF THE STATE OF MINNESOTA.

MICHAEL J BOEX
LIC. NO. 44576 DATE MM/DD/YYYY

BOLTON & MENK
3507 HIGH POINT DRIVE NORTH
BLDG. 1 - SUITE E130
OAKDALE, MN 55128
Phone: (651) 704-9970
Email: Oakdale@bolton-menk.com
www.bolton-menk.com

Cottage Grove
Where Pride and Prosperity Meet

| DESIGNED | NO. | ISSUED FOR | DATE |
|---|---|---|---|
| ANO | | | |
| DRAWN | | | |
| BNM | | | |
| CHECKED | | | |
| MJB | | | |
| CLIENT PROJ. NO. | | | |
| 137045 | | | |

CITY OF COTTAGE GROVE
2026 PAVEMENT MANAGEMENT PROJECT
STANDARD DETAIL PLATES

SHEET C1.09

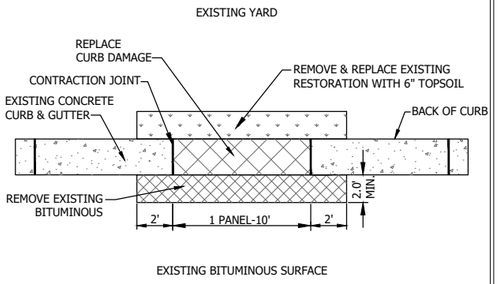


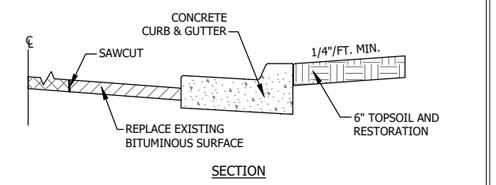


STANDARD DETAILS
CONCRETE CURB REPLACEMENT
COTTAGE GROVE, MINNESOTA
JANUARY 2026
PLATE NO. STR-19

48_STR19.DWG

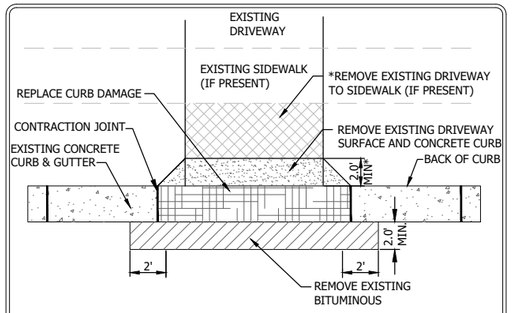


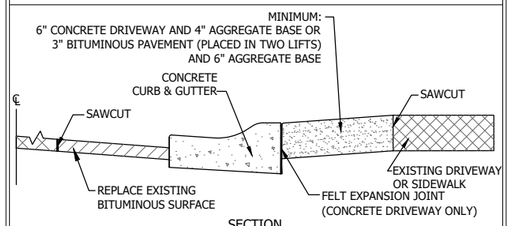


STANDARD DETAILS
CONCRETE CURB REPLACEMENT AT DRIVEWAY LOCATION
COTTAGE GROVE, MINNESOTA
JANUARY 2026
PLATE NO. STR-20

48_STR20.DWG

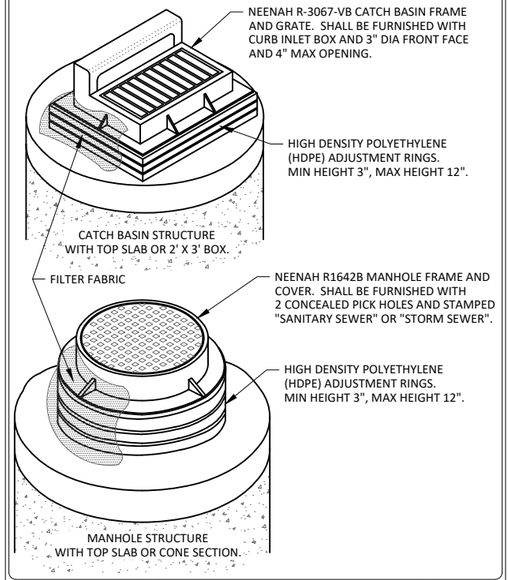


STANDARD DETAILS
CATCHBASIN AND MANHOLE ADJUSTMENT
COTTAGE GROVE, MINNESOTA
JANUARY 2026
PLATE NO. STR-23

137045C108.dwg

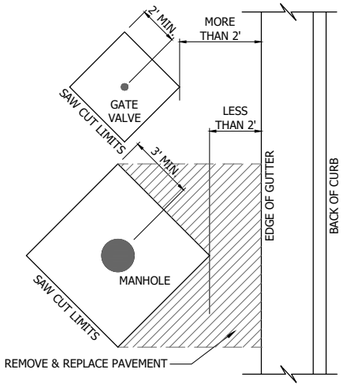


STANDARD DETAILS
STRUCTURE ADJUSTMENT PATCH (BITUMINOUS OR CONCRETE)
COTTAGE GROVE, MINNESOTA
JANUARY 2026
PLATE NO. STR-25

48_STR25.DWG

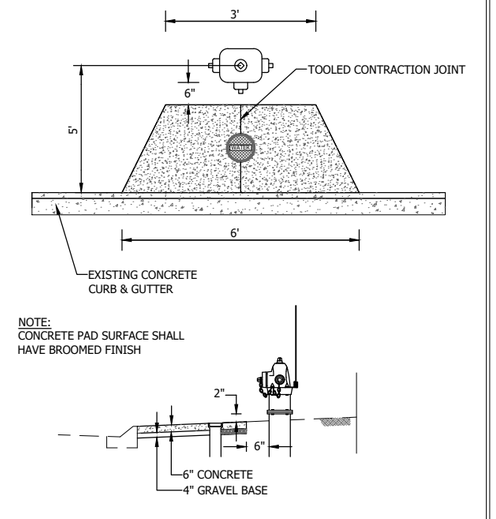


STANDARD DETAILS
CONCRETE HYDRANT PAD
COTTAGE GROVE, MINNESOTA
JANUARY 2026
PLATE NO. STR-37

48_STR37.DWG

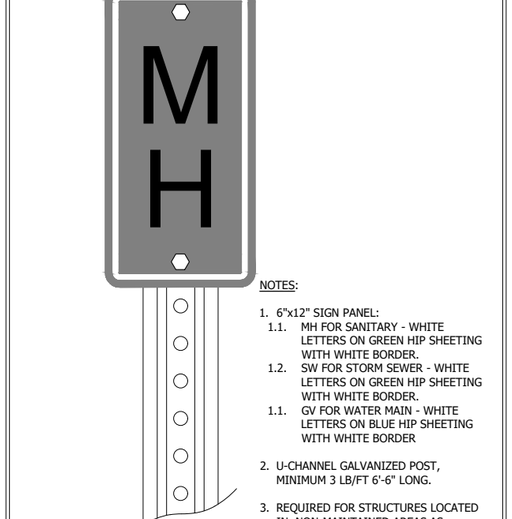


STANDARD DETAILS
STRUCTURE MARKER SIGN
COTTAGE GROVE, MINNESOTA
JANUARY 2026
PLATE NO. STR-41

48_STR41.DWG

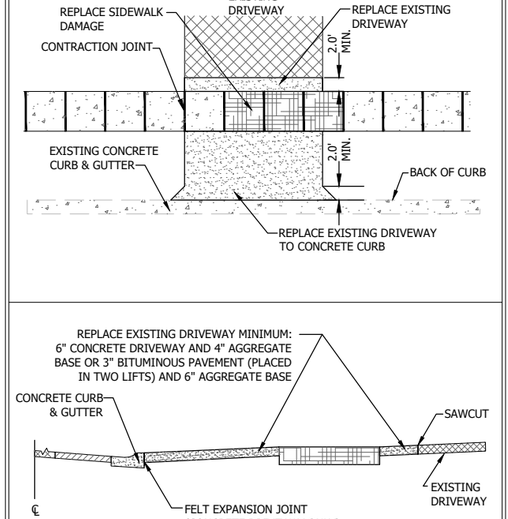


STANDARD DETAILS
CONCRETE SIDEWALK REPLACEMENT AT DRIVEWAY LOCATION
COTTAGE GROVE, MINNESOTA
JANUARY 2026
PLATE NO. STR-42

48_STR42.DWG

©Bolton & Menk, Inc. 2026. All Rights Reserved
H:\COTT_24X\137045000\CAD\C3D\137045C108.dwg 2/25/2026 6:28:04 AM

I HEREBY CERTIFY THAT THIS PLAN, SPECIFICATION, OR REPORT WAS PREPARED BY ME OR UNDER MY DIRECT SUPERVISION AND THAT I AM A DULY LICENSED PROFESSIONAL ENGINEER UNDER THE LAWS OF THE STATE OF MINNESOTA.
MICHAEL J BOEX
LIC. NO. 44576 DATE MM/DD/YYYY

BOLTON & MENK
3507 HIGH POINT DRIVE NORTH
BLDG. 1 - SUITE E130
OAKDALE, MN 55128
Phone: (651) 704-9970
Email: Oakdale@bolton-menk.com
www.bolton-menk.com

Cottage Grove — Where Pride and Prosperity Meet

| DESIGNED | ANO |
|---|---|
| DRAWN | BNM |
| CHECKED | MJB |
| CLIENT PROJ. NO. | 137045 |

| NO. | ISSUED FOR | DATE |
|---|---|---|

CITY OF COTTAGE GROVE
2026 PAVEMENT MANAGEMENT PROJECT
STANDARD DETAIL PLATES

SHEET C1.10

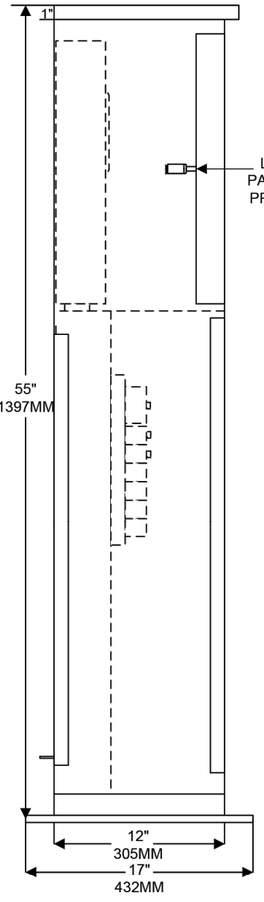


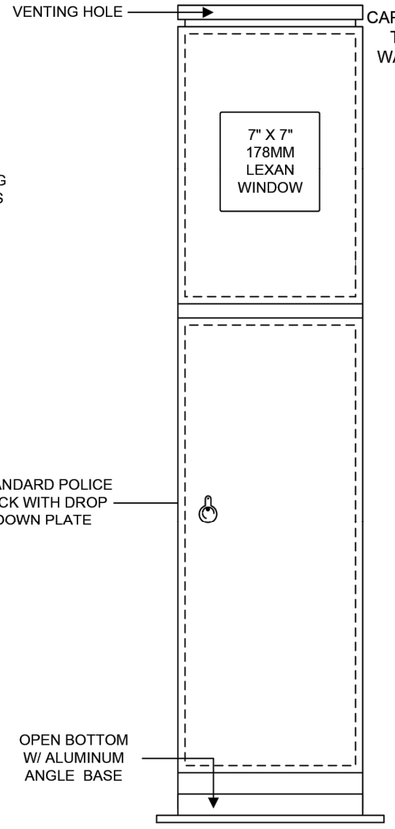


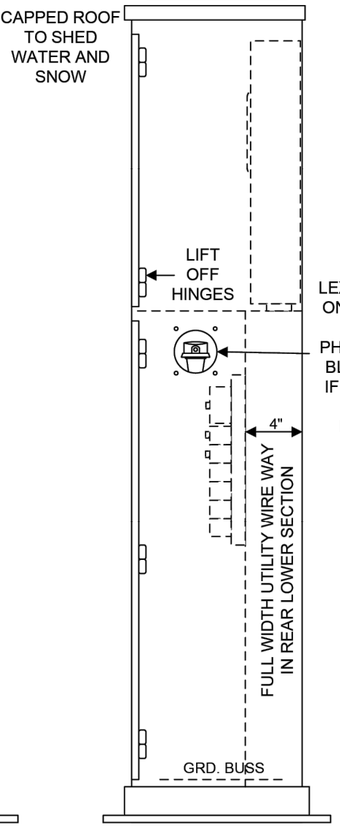


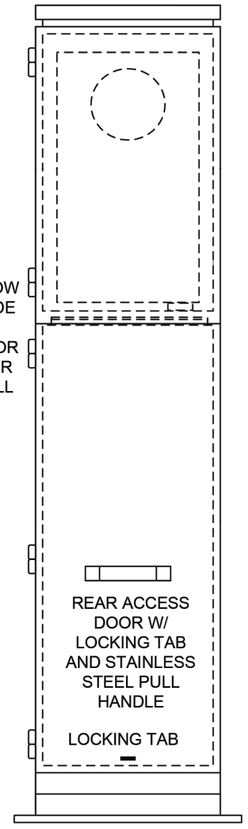


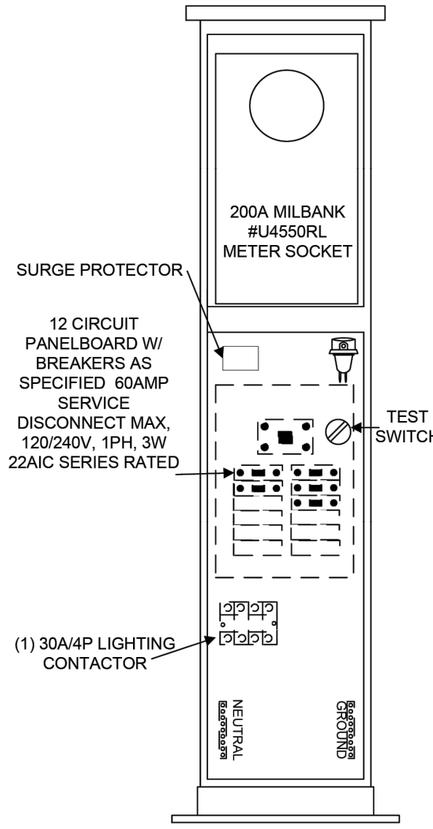


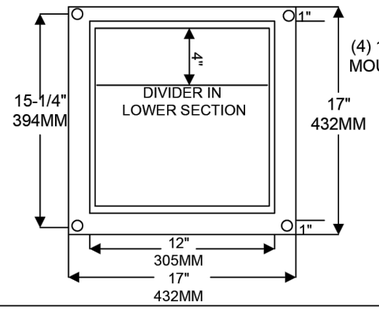


NOTE: CONNECT THE EXISTING CONDUCTORS SUCH THAT A SINGLE CIRCUIT IN THE SERVICE CABINET FEEDS ONLY CONDUCTORS EXTENDING IN A SINGLE DIRECTION FROM THE CABINET

**BOX CONSTRUCTION:**

-NEMA 3R
-NEOPRENE GASKET ON DOORS
-1/8" ALUMINUM 5052-H32
-BARE ALUMINUM FINISH
-NON-CORRODING HARDWARE
-ETL LISTED IN ACCORDANCE W/ UL508A

# SERVICE CABINET 1

CABINET BASE NOTES:

1. CONFORM TO LGT-6/C1.10 UNLESS NOTED BELOW.
2. NUMBER AND SIZE OF CONDUIT PER PLAN. CONTRACTOR TO PROVIDE ONE SPARE CONDUIT OF EACH SIZE AND TYPE.
3. BROOM FINISH CONCRETE.
4. IF CABINET IS A SERVICE, PROVIDE GROUNDING ELECTRODES PER NEC REQUIREMENTS. IF CABINET IS SUPPLIED BY A FEEDER CIRCUIT, PROVIDE ONE 5/8"X10' COPPER CLAD GROUNDING ROD. GROUNDING RODS SHALL EXTEND THREE INCHES ABOVE THE CONCRETE.
5. CONDUITS THAT TERMINATE IN AN OPEN BOTTOM CABINET SHALL EXTEND THREE INCHES ABOVE THE CONCRETE.


Povolny Specialties
DBE, SBE, TGB & WBE
Wisconsin DBE CERTIFIED
7350 COURTHOUSE BLVD.
INVER GROVE HGTS., MN 55077
PHONE: 651-452-7335
FAX: 651-452-7336
www.povolnyspecialties.com


| | | |
|---|---|---|
| SCALE: NTS | APPROVED BY: | DRAWN BY: MMP |
| DATE: 6/21/2016 | | REVISED DATE: |

CUSTOMER: CITY OF COTTAGE GROVE

PROJECT:

DRAWING NUMBER

THIS DRAWING IS THE PROPERTY OF POVOLNY SPECIALTIES, INC. PERMISSION TO USE GRANTED ONLY TO THE CONTRACTOR AND PROJECT NOTED ABOVE.

© Bolton & Menk, Inc. 2026. All Rights Reserved
H:\CO\T\24X13704500\1\CAD\C3D\137045c108.dwg 2/25/2026 6:28:05 AM

I HEREBY CERTIFY THAT THIS PLAN, SPECIFICATION, OR REPORT WAS PREPARED BY ME OR UNDER MY DIRECT SUPERVISION AND THAT I AM A DULY LICENSED PROFESSIONAL ENGINEER UNDER THE LAWS OF THE STATE OF MINNESOTA.

MICHAEL J BOEX
LIC. NO. 44576 DATE MM/DD/YYYY


BOLTON & MENK
3507 HIGH POINT DRIVE NORTH
BLDG. 1 - SUITE E130
OAKDALE, MN 55128
Phone: (651) 704-9970
Email: Oakdale@bolton-menk.com
www.bolton-menk.com


Cottage Grove
Where Pride and Prosperity Meet

| | |
|---|---|
| DESIGNED | ANO |
| DRAWN | BNM |
| CHECKED | MJB |
| CLIENT PROJ. NO. | 137045 |

| NO. | ISSUED FOR | DATE |
|---|---|---|
| | | |

CITY OF COTTAGE GROVE
2026 PAVEMENT MANAGEMENT PROJECT
ELECTRICAL CABINET DETAIL

SHEET
C1.11

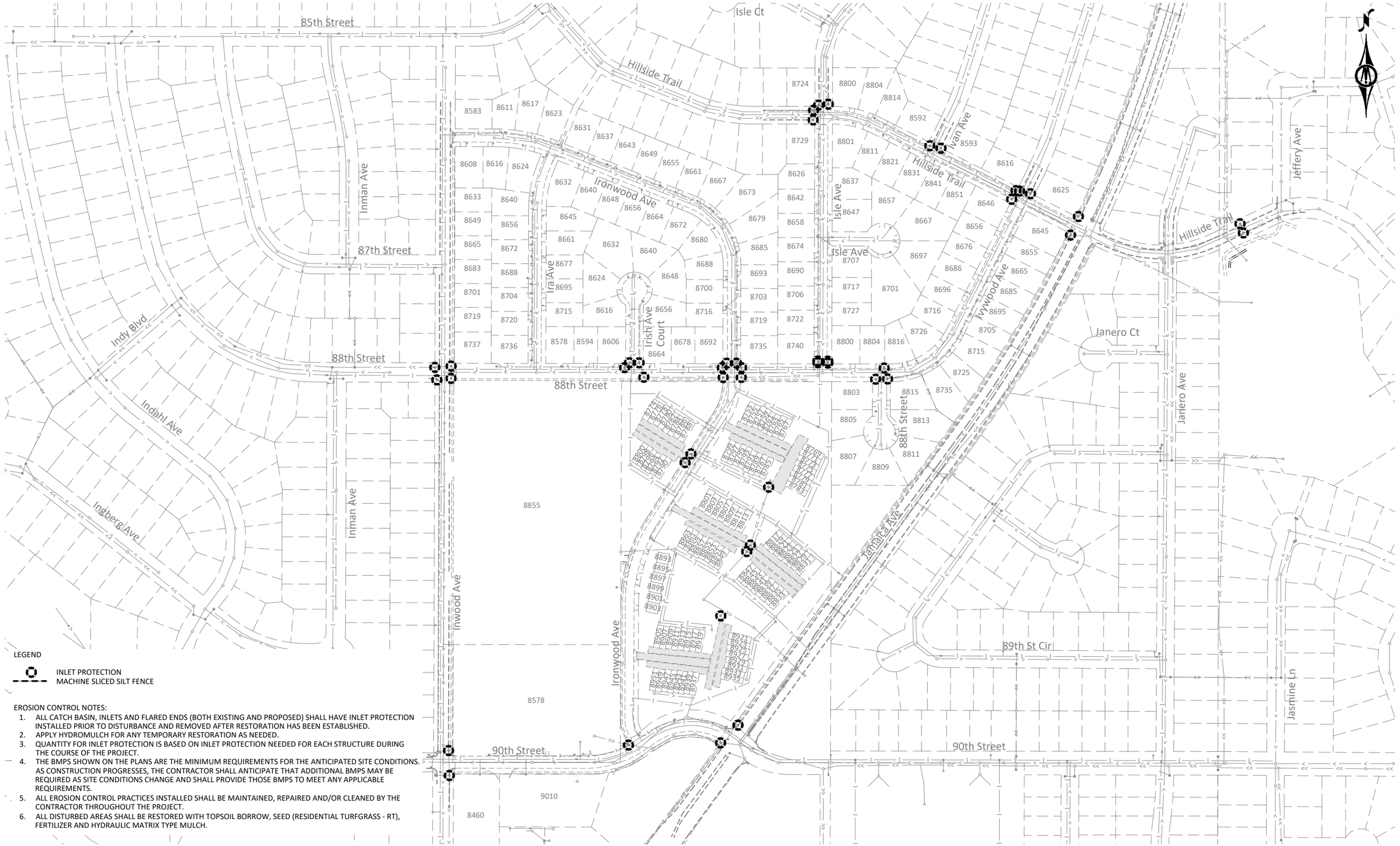


LEGEND

INLET PROTECTION
MACHINE SLICED SILT FENCE

EROSION CONTROL NOTES:

1. ALL CATCH BASIN, INLETS AND FLARED ENDS (BOTH EXISTING AND PROPOSED) SHALL HAVE INLET PROTECTION INSTALLED PRIOR TO DISTURBANCE AND REMOVED AFTER RESTORATION HAS BEEN ESTABLISHED.
2. APPLY HYDROMULCH FOR ANY TEMPORARY RESTORATION AS NEEDED.
3. QUANTITY FOR INLET PROTECTION IS BASED ON INLET PROTECTION NEEDED FOR EACH STRUCTURE DURING THE COURSE OF THE PROJECT.
4. THE BMPS SHOWN ON THE PLANS ARE THE MINIMUM REQUIREMENTS FOR THE ANTICIPATED SITE CONDITIONS. AS CONSTRUCTION PROGRESSES, THE CONTRACTOR SHALL ANTICIPATE THAT ADDITIONAL BMPS MAY BE REQUIRED AS SITE CONDITIONS CHANGE AND SHALL PROVIDE THOSE BMPS TO MEET ANY APPLICABLE REQUIREMENTS.
5. ALL EROSION CONTROL PRACTICES INSTALLED SHALL BE MAINTAINED, REPAIRED AND/OR CLEANED BY THE CONTRACTOR THROUGHOUT THE PROJECT.
6. ALL DISTURBED AREAS SHALL BE RESTORED WITH TOPSOIL BORROW, SEED (RESIDENTIAL TURFGRASS - RT), FERTILIZER AND HYDRAULIC MATRIX TYPE MULCH.

©Bolton & Menk, Inc. 2026. All Rights Reserved
H:\COT\CAD\137045000\CAD\C3D\137045C201.dwg 2/25/2026 6:28:39 AM

HORZ. SCALE 0 150 300 FEET

I HEREBY CERTIFY THAT THIS PLAN, SPECIFICATION, OR REPORT WAS PREPARED BY ME OR UNDER MY DIRECT SUPERVISION AND THAT I AM A DULY LICENSED PROFESSIONAL ENGINEER UNDER THE LAWS OF THE STATE OF MINNESOTA.

MICHAEL J BOEX
LIC. NO. 44576 DATE MM/DD/YYYY

BOLTON & MENK
3507 HIGH POINT DRIVE NORTH
BLDG. 1 - SUITE E130
OAKDALE, MN 55128
Phone: (651) 704-9970
Email: Oakdale@bolton-menk.com
www.bolton-menk.com

Cottage Grove
Where Pride and Prosperity Meet

| | |
|---|---|
| DESIGNED | ANO |
| DRAWN | BNM |
| CHECKED | MJB |
| CLIENT PROJ. NO. | 137045 |

| NO. | ISSUED FOR | DATE |
|---|---|---|
| | | |

CITY OF COTTAGE GROVE
2026 PAVEMENT MANAGEMENT PROJECT
EROSION CONTROL PLAN

SHEET C2.01

# STORMWATER POLLUTION PREVENTION PLAN (SWPPP)

## PAVEMENT MANAGEMENT - 2026

CITY OF COTTAGE GROVE
WASHINGTON COUNTY, MINNESOTA

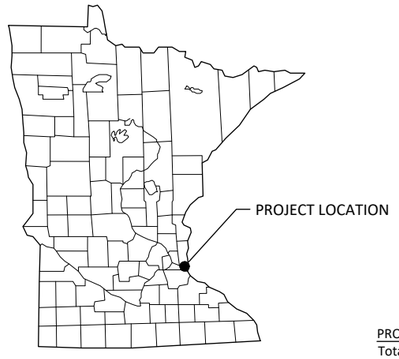


LEGEND

1-MILE BOUNDARY
PROJECT BOUNDARY
OR
IMPAIRED, SPECIAL OR PROTECTED WATERS
NATIONAL WETLANDS INVENTORY

RESPONSIBLE PARTIES:
The Contractor and Owner will be joint applicants under the MPCA's General Stormwater Permit for Construction Activity as required by the National Pollutant Discharge Elimination System (NPDES) Phase II program.

The Contractor shall provide one or more trained Construction SWPPP Manager(s) knowledgeable and experienced in the application of erosion prevention and sediment control BMPs that will oversee the implementation of the SWPPP, and the installation, inspection and maintenance of the erosion prevention and sediment control BMPs.

A Construction SWPPP Manager must be available for an on-site inspection within 72 hours upon request by the MPCA.

| | COMPANY | CONTACT PERSON | PHONE |
|---|---|---|---|
| OWNER: | CITY OF COTTAGE GROVE | PAUL SPONHOLZ | 651-458-2800 |
| SWPPP DESIGNER: | Bolton & Menk, Inc. | BRIAN RUCKER | 952-256-3523 |
| CONTRACTOR: | TBD | TBD | TBD |
| CONSTRUCTION SWPPP MANAGER: | TBD | TBD | TBD |
| PARTY RESPONSIBLE FOR LONG TERM O&M: | CITY OF COTTAGE GROVE | PAUL SPONHOLZ | 651-458-2800 |

The SWPPP Designer, Construction SWPPP Manager, and BMP Installer must have appropriate training. Documentation showing training commensurate with the job duties and responsibilities is required to be included in the SWPPP prior to any work beginning on the site. Training documentation for the SWPPP Designer is included on the Narrative sheet. The Contractor shall attach training documentation to this SWPPP for the Construction SWPPP Manager and BMP Installer prior to the start of construction. This information shall be kept up to date until the project NOT is filed.

ADDITIONAL COMPENSATION
Payment for all work associated with Erosion and Sediment Control shall be as described in the Project Manual. Unless otherwise authorized by the Owner no additional payment shall be made for any work required to administer and maintain the site erosion and sediment control in compliance with the Minnesota Pollution Control Agency (MPCA) - General Stormwater Permit for Construction Activity (MN R100001) including but not limited to inspection, maintenance, and removal of BMPs or addition of BMPs to accommodate Contractor phasing.

DOCUMENT RETENTION
Permittees must make the SWPPP, including all inspection reports, maintenance records, training records and other information required by this permit, available to federal, state, and local officials within three (3) days upon request for the duration of the permit and for three (3) years following the NOT.

GENERAL STORMWATER DISCHARGE REQUIREMENTS
All requirements listed in Section 5.1 of the Permit for the design of the permanent stormwater management system and discharge have been included in the preparation of this SWPPP. These include but are not limited to:

1. The expected amount, frequency, intensity, and duration of precipitation.
2. The nature of stormwater runoff and run-on at the site
3. Peak flow rates and stormwater volumes to minimize erosion at outlets and downstream channel and stream bank erosion.
4. The range of soil particle sizes expected to be present on the site.

Permanent stormwater treatment systems for this project have been designed in accordance with the guidance in the MN Stormwater Manual in place at the time of bidding. Copies of the design information and calculations are part of this SWPPP and will be provided in digital format upon written request to the Engineer.

PROJECT AREAS:

| | | |
|---|---|---|
| Total Project Size (disturbed area) = | 1.2 | ACRES |
| Existing area of impervious surface = | 7.7 | ACRES |
| Post construction area of impervious surface = | 7.7 | ACRES |
| Total new impervious surface area created = | 0.0 | ACRES |

| | |
|---|---|
| Planned Construction Start Date: | 05/01/2026 |
| Estimated Construction Completion Date: | 10/31/2026 |

PERMANENT STORMWATER MANAGEMENT SYSTEM:
Type of storm water management used if more than 1 acre of new impervious surface is created:

| | |
|---|---|
| | Wet Sedimentation Basin |
| | Infiltration/Filtration |
| | Regional Pond |
| | Permanent Stormwater Management Not Required |

PROJECT LOCATION:

| COUNTY | TOWNSHIP | RANGE | SECTION | LATITUDE | LONGITUDE |
|---|---|---|---|---|---|
| WASHINGTON | T27N | R21W | 16 | 44.8233° | -92.9321° |
| | | | | | |

| BMP SUMMARY | QUANTITY | UNIT |
|---|---|---|
| INLET PROTECTION | 42 | EACH |
| SEED | 250 | LB |
| HYDROMULCH | 6070 | SY |
| | | |
| | | |
| | | |
| | | |
| | | |
| | | |
| | | |
| | | |

DESCRIPTION OF CONSTRUCTION ACTIVITIES AND STORMWATER MANAGEMENT:
Construction activities include replacement of existing storm sewer structures and temporary erosion and sediment control. Stormwater currently sheet flows to catch basin inlets and then is discharged into unnamed pond.

After construction is complete stormwater will largely remain unchanged as part of this project

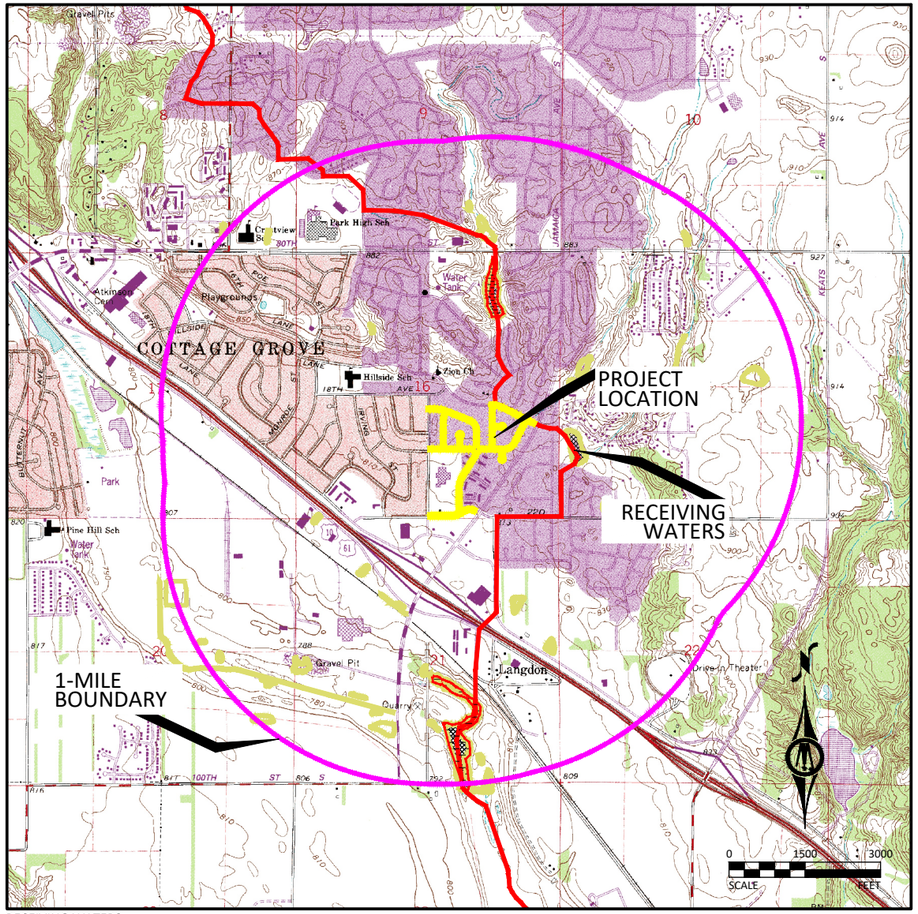


RECEIVING WATERS:
Receiving waters, including surface water, wetlands, Public Waters, and stormwater ponds, within 1-mile of the project boundary are identified on the USGS 7.5 min quad map above. Receiving waters that are impaired, the impairment, and WLA are listed as follows. All specific BMPs relative to construction activities listed in the permit for special, prohibited, restricted, or impaired have been incorporated into this plan. All specific BMPs listed in approved TMDLs and those BMPs listed for construction related waste load allocations have also been incorporated.

| NAME OF WATER BODY | TYPE (ditch, pond, wetland, lake, etc.) | Special, Prohibited, Restricted Water [1] | Flows to Impaired Water Within 1-Mile [2] | USEPA Approved Construction Related TMDL [3] |
|---|---|---|---|---|
| UNNAMED CREEK | CREEK | YES | YES | NO |
| UNNAMED POND | POND | YES | NO | NO |

[1] Special, prohibited, and restricted waters are listed in Section 23 of the MN Construction Stormwater General Permit (MNR100001).
[2] Identified as impaired under section 303 (d) of the federal Clean Water Act for phosphorus, turbidity, TSS, dissolved oxygen, and/or aquatic biota.
[3] Construction Related TMDLs include those related to: phosphorus, turbidity, TSS, dissolved oxygen, and/or aquatic biota.

IMPLEMENTATION SCHEDULE AND PHASING: The Contractor is required to provide an updated schedule and site management plan meeting the minimum requirements of Section 1717 of the Minnesota Standard Specifications for Construction.

1) Submit SWPPP Updates to Engineer. Submittal shall include any requested changes to the SWPPP, including but not limited to: Trained Personnel, Locations for Stockpiles, Concrete Washout, Sanitation Facilities, Types and Locations of Erosion & Sediment Control. Failure to submit updates shall be considered acceptance of the SWPPP as designed with no changes.
2) Install perimeter sediment control, inlet protection, and construction exit.
3) Remove Pavement
4) Adjust and implement corrections to sub base
5) Install Curb and Gutter
6) Repave roadway
7) Add additional temporary BMPs as necessary during construction based on inspection reports.
8) Ensure final stabilization measures are complete.
9) Provide digital copy of all Field SWPPP Documentation including Inspection Reports and SWPPP Revisions to the Owner.
10) Submit Notice of Termination (NOT) to MPCA. NOTE: The NOT must be submitted to MPCA before Final Stabilization is considered complete.

©Bolton & Menk, Inc. 2026. All Rights Reserved
H:\CO\T\24X\13704500\CAD\C3D\137045C204.dwg 2/25/2026 7:23:48 AM

I HEREBY CERTIFY THAT THIS PLAN, SPECIFICATION, OR REPORT WAS PREPARED BY ME OR UNDER MY DIRECT SUPERVISION AND THAT I AM A DULY LICENSED PROFESSIONAL ENGINEER UNDER THE LAWS OF THE STATE OF MINNESOTA.
MICHAEL J BOEX
LIC. NO. 44576 DATE MM/DD/YYYY

BOLTON & MENK
3507 HIGH POINT DRIVE NORTH
BLDG. 1 - SUITE E130
OAKDALE, MN 55128
Phone: (651) 704-9970
Email: Oakdale@bolton-menk.com
www.bolton-menk.com

Cottage Grove
Where Pride and Prosperity Meet

| | |
|---|---|
| DESIGNED | ANO |
| DRAWN | BNM |
| CHECKED | MJB |
| CLIENT PROJ. NO. | 137045 |

| NO. | ISSUED FOR | DATE |
|---|---|---|
| | | |
| | | |
| | | |
| | | |
| | | |

CITY OF COTTAGE GROVE
2026 PAVEMENT MANAGEMENT PROJECT
STORMWATER POLLUTION PREVENTION PLAN
SWPPP PLAN

SHEET
C2.02

Information contained in this SWPPP narrative sheet summarizes requirements of the GENERAL PERMIT AUTHORIZATION TO DISCHARGE STORMWATER ASSOCIATED WITH CONSTRUCTION ACTIVITY UNDER THE NATIONAL POLLUTANT DISCHARGE ELIMINATION SYSTEM/STATE DISPOSAL SYSTEM PROGRAM - Permit No: MN RI0000I (Permit) as they apply to this project. All provisions of the Permit including those not specifically cited herein shall apply to this project. The Contractor is responsible to be familiar with and comply with all conditions of the permit. The full text of the Permit is available at: https://www.pca.state.mn.us/sites/default/files/wq-strm2-80a.pdf

## SWPPP AMENDMENTS AND SUBMITTALS

Contractor must prepare and submit to the Engineer a SWPPP amendment as necessary to include additional Best Management Practices (BMPs) to correct problems identified or address the following situations.

1. Contact information and training documentation for Construction SWPPP Manager and BMP Installer,
2. There is a change in construction method of phasing, operation, maintenance, weather or seasonal conditions not anticipated during the design of the SWPPP including but not limited to:
    a. Types and/or Locations of BMPs
    b. Material Storage and Spill Response
    c. Fueling Plans
    d. Locations for Stockpiles, Concrete Washout, and Sanitation Facilities and
    e. Project Phasing
3. It is determined that the SWPPP is not achieving objectives of minimizing pollutants in stormwater discharges associated with construction activity, or
4. The SWPPP is not consistent with the terms and conditions of the permit.

The Contractor may implement SWPPP amendments immediately and is not required to wait for Engineer review of the submittal. The responsibility for completeness of SWPPP amendments and compliance with the Permit lies with the Contractor. Review, comment, or lack of comment by the Engineer on a SWPPP amendment shall not absolve the responsibilities of the Contractor in any way.

If a change order is issued for a design change the SWPPP amendment will be prepared by the Engineer and included in the change order.

In addition to SWPPP amendments, the Contractor shall submit to the Engineer Weekly Erosion and Sediment Control Schedule meeting the requirements of MnDOT 1717.

The Contractor shall keep copies of all SWPPP amendments, Weekly Erosion and Sediment Control Schedules, inspection logs, and maintenance logs with the field copy of the SWPPP. A PDF copy of these documents will be provided along with a copy of the final Field Copy of the SWPPP to the Engineer along with the signed Notice of Termination when final stabilization is complete.

## EROSION PREVENTION PRACTICES

Stormwater conveyance channels shall be routed around unstabilized areas. Erosion controls and velocity dissipation devices shall be used at outlets within and along the length of any constructed conveyance channel.

The normal wetted perimeter of all ditches or swales, including storm water management pond slopes, that drain waters from the site must be stabilized within 200' of any property edge or discharge point, including storm sewer inlets, within 24 hours of connection.

Temporary or permanent ditches or swales used as sediment containment during construction do not need to be stabilized during temporary period of use and shall be stabilized within 24 hours after no longer used as sediment containment.

Mulch, hydromulch, tackifier, or similar practice shall not be used in any portion of the wetted perimeter of a temporary or permanent drainage ditch or swale section with a continuous slope of greater than 2 percent.

Energy dissipation shall be installed at all temporary or permanent pipe outlets within 24 hours of connection to a surface water or permanent stormwater treatment system.

The Contractor shall phase construction and use construction methods to the extent practical to minimize exposed soils. The project phasing shall be documented in the Weekly Erosion and Sediment Control Schedule.

## SEDIMENT CONTROL PRACTICES

Down gradient BMPs including perimeter BMPs must be in place before up gradient land- disturbing activities begin and shall remain in place until final stabilization.

All BMPs that have been adjusted or removed to accommodate short-term activities shall be re-installed or replaced the earlier of the end of the work day or before the next precipitation event even if the activity is not complete.

Inlet BMPs may be removed for specific safety concerns. The BMPs shall be replaced as soon as the safety concern is resolved. The removal shall be documented in the SWPPP as a SWPPP amendment.

Temporary stockpiles must have sediment control BMPs. The Contractor shall prepare and submit to the Engineer a SWPPP amendment showing the location of temporary stockpiles and the BMPs for each stockpile. The SWPPP amendment must meet the minimum requirements of Section 9 of the Permit.

Soil compaction shall be minimized and topsoil shall be preserved, unless infeasible or if construction activities dictate soil compaction or topsoil stripping.

The use of polymers, flocculants, or other sedimentation treatment chemicals are not proposed as part of this SWPPP as designed by the Engineer. If methods or phasing of construction require the use of any of these chemicals, the Contractor shall prepare and submit to the Engineer a SWPPP amendment that meets the minimum requirements of Section 9 of the Permit.

## TEMPORARY SEDIMENTATION BASINS

A temporary sedimentation basin has not been included in this SWPPP as designed by the Engineer. If a basin is later determined to be desirable or necessary the Contractor shall prepare and submit to the Engineer a SWPPP amendment. Temporary sedimentation basins shall meet or exceed the minimum requirements of Section 14 of the Permit and shall include a basin draining plan meeting or exceeding the minimum requirements of Section 10 of the Permit. Where the site discharges to Special and/or Impaired Waters the SWPPP amendment shall also meet or exceed the minimum requirements of Section 23 of the permit.

## DEWATERING

A dewatering plan has not been included in this SWPPP as designed by the Engineer. If dewatering is required for this project, the Contractor shall prepare and submit to the Engineer a SWPPP amendment. All dewatering shall meet or exceed the minimum requirements of Section 10 of the Permit.

## POLLUTION PREVENTION

Products and materials that have the potential to leach pollutants that are stored on the site must be stored in a manner designed to minimize contact with stormwater. Materials that are not a source of potential contamination to stormwater or that are designed for exposure to stormwater are not required to be covered.

Hazardous materials including but not limited to pesticides, fertilizer, petroleum products, curing compounds and toxic waste must be properly stored and protected from stormwater exposure as recommended by the manufacturer in an access restricted area.

Solid waste must be stored, collected and disposed of in compliance with Minnesota Administrative Rules Chapter 7035.

Portable toilets must be positioned so that they are secure and will not be tipped or knocked over. Sanitary waste must be disposed of properly in accordance with Minn. R. CH 7041.

Exterior vehicle or equipment washing on the project site shall be limited to a defined area of the site. No engine degreasing is allowed on site. A sign must be installed adjacent to each washout facility that requires site personnel to utilize the proper facilities for disposal of concrete and other washout wastes.

The Contractor shall prepare and submit a SWPPP amendment detailing the location and BMPs proposed for storage of materials, solid waste, portable toilets, and exterior vehicle or equipment washing on the site. The SWPPP amendment shall include a spill prevention and response plan that is appropriate for the materials proposed to be on the site. The SWPPP amendment shall meet or exceed the minimum requirements of Section 12 of the Permit.

## INSPECTION & MAINTENANCE

A trained person shall routinely inspect the entire construction site at the time interval indicated on this sheet of the SWPPP during active construction and within 24-hours after a rainfall event greater than 0.5 inches in 24 hours. Following an inspection that occurs within 24-hours after a rainfall event, the next inspection must be conducted at the time interval indicated in the Receiving Waters Table found on the SITE PLAN AND INFORMATION SHEET of the SWPPP.

All inspections and maintenance conducted during construction must be recorded on the day it is completed and must be retained with the SWPPP. Inspection report forms are available in the Project Specifications. Inspection report forms other than those provided shall be approved by the engineer.

The Contractor may request a change in inspection schedule for the following conditions:

a. Inspections of areas with permanent cover to be reduced to once per month,
b. Inspections of areas that have permanent cover and have had no construction activity for 12 months to be suspended until construction resumes,
c. Inspections of areas where construction is suspended due to frozen ground conditions, inspections to be suspended until the earlier of within 24 hours of runoff occurring, or upon resuming construction.

No change in inspection schedule shall occur until authorized by the Engineer.

Inspections must include:

1. All erosion prevention and sediment control BMPs and Pollution Prevention Management Measures to ensure integrity and effectiveness.
2. Surface waters, including drainage ditches and conveyance systems for evidence of erosion and sediment deposition.
3. Construction site vehicle exit locations, streets and curb and gutter systems within and adjacent to the project for sedimentation from erosion or tracked sediment from vehicles.
4. Infiltration areas to ensure that no sediment from ongoing construction activity is reaching the infiltration area and that equipment is not being driven across the infiltration area.

All non-functioning BMPs and those BMPs where sediment reaches one-half (1/2) of the depth of the BMP, or in the case of sediment basins one-half (1/2) of the storage volume, must be repaired, replaced, or supplemented by the end of the next business day after discovery, or as soon as field conditions allow.

Permittees must repair, replace or supplement all nonfunctional BMPs with functional BMPs by the end of the next business day after discovery, or as soon as field conditions allow.

Any sediment that escapes the site must be removed and the area stabilized within 7 calendar days of discovery unless precluded by legal, regulatory, or physical access in which case the work shall be completed within 7 calendar days of authorization. Paved surfaces such as streets shall have any escaped or tracked sediment removed by the end of the day that it is discovered. Sediment release, other than paved surfaces that can be cleaned up with street sweeping shall be reported immediately upon discovery to the Engineer.

## PUBLIC WATER RESTRICTIONS:

For public waters that have been promulgated "work in water restrictions" during fish spawning time frames, all exposed soil areas that are within 200 feet of the water's edge, and drain to these waters must complete stabilization within 24-hours during the time period. MN DNR permits are not valid for work in waters that are designated as infested waters unless accompanied by an Infested Waters Permit or written notification has been obtained from MN DNR stating that such permit is not required. There is no exception for pre-existing permits. If a MN DNR Permit has been issued for the project and the water is later designated as infested, the Contractor shall halt all work covered by the MN DNR Permit until an Infested Waters Permit is obtained or that written notification is obtained stating that such permit is not required.

## FINAL STABILIZATION

Final Stabilization is not complete until all the following requirements have been met:

1. Substantial Completion has been reached and no ground disturbing activities are anticipated.
2. Permanent cover has been installed with an established minimum uniform perennial vegetation density of 70 percent of its expected final growth. Vegetation is not required in areas where no vegetation is proposed by this project such as impervious surfaces or the base of a sand filter.
3. Accumulated sediment has been removed from all permanent stormwater treatment systems as necessary to ensure the system is operating as designed.
4. All sediment has been removed from conveyance systems
5. All temporary synthetic erosion prevention and sediment control BMPs have been removed. BMPs designated on the SWPPP to remain to decompose on-site may remain.
6. For residential construction only, permit coverage terminates on individual lots if the structures are finished and temporary erosion prevention and downgradient perimeter control is complete, the residence sells to the homeowner, and the permittee distributes the MPCA's "Homeowner Fact Sheet" to the homeowner.
7. For agricultural land only (e.g., pipelines across cropland), the disturbed land must be returned to its preconstruction agricultural use prior to submitting the NOT.

## SITE STABILIZATION COMPLETION:

| | |
|---|---|
| Stabilization of exposed soils shall begin immediately and shall be completed after the construction activity has temporarily or permanently ceased no later than: | 7 calendar days |

## SITE INSPECTION INTERVAL:

| | |
|---|---|
| A trained person shall routinely inspect the entire construction site during active construction at an interval of no more than: | 7 calendar days |

## SPECIAL ENVIRONMENTAL CONSIDERATIONS AND PERMITS:

| | | |
|---|---|---|
| 1) | Was an environmental review required for this project or any part of a common plan of development or sale that includes all or any portion of this project? | NO |
| 2) | Does any portion of the site have the potential to affect threatened or endangered species or their critical habitat? | NO |
| 3) | Does any portion of this site discharge to a Calcareous fen. | NO |
| 4) | Will any portion of the site potentially affect properties listed on the National Register of Historic Places or a known or discovered archeological site? | NO |
| 5) | Have any Karst features have been identified in the project vicinity? | NO |
| 6) | Is compliance with temporary or permanent stormwater management design requirements infeasible for this project? | NO |
| 7) | Has the MN DNR promulgated "work in water restrictions" for any Public Water this site disharges to during fish spawning? | NO |

| TYPE OF PERMIT | PERMITTING AGENCY | PERMIT STATUS AND CONDITIONS |
|---|---|---|
| Construction Stormwater NPDES | MPCA | |
| | | |
| | | |
| | | |

## SWPPP DESIGNER TRAINING DOCUMENTATION:

UNIVERSITY OF MINNESOTA
**Brian Rucker**
Design of Construction SWPPP (May 31 2027)

© Bolton & Menk, Inc. 2026. All Rights Reserved
H:\CITY\24x13\3704500\CAD\C3D\137045c204.dwg 2/25/2026 7:19:31 AM

I HEREBY CERTIFY THAT THIS PLAN, SPECIFICATION, OR REPORT WAS PREPARED BY ME OR UNDER MY DIRECT SUPERVISION AND THAT I AM A DULY LICENSED PROFESSIONAL ENGINEER UNDER THE LAWS OF THE STATE OF MINNESOTA.
MICHAEL J BOEX
LIC. NO. 44576 DATE MM/DD/YYYY

BOLTON & MENK
3507 HIGH POINT DRIVE NORTH
BLDG. 1 - SUITE E130
OAKDALE, MN 55128
Phone: (651) 704-9970
Email: Oakdale@bolton-menk.com
www.bolton-menk.com

Cottage Grove
Where Pride and Prosperity Meet

| DESIGNED | ANO |
|---|---|
| DRAWN | BNM |
| CHECKED | MJB |
| CLIENT PROJ. NO. | 137045 |

| NO. | ISSUED FOR | DATE |
|---|---|---|
| | | |

CITY OF COTTAGE GROVE
2026 PAVEMENT MANAGEMENT PROJECT
STORMWATER POLLUTION PREVENTION PLAN
SWPPP NARRATIVE

SHEET C2.03

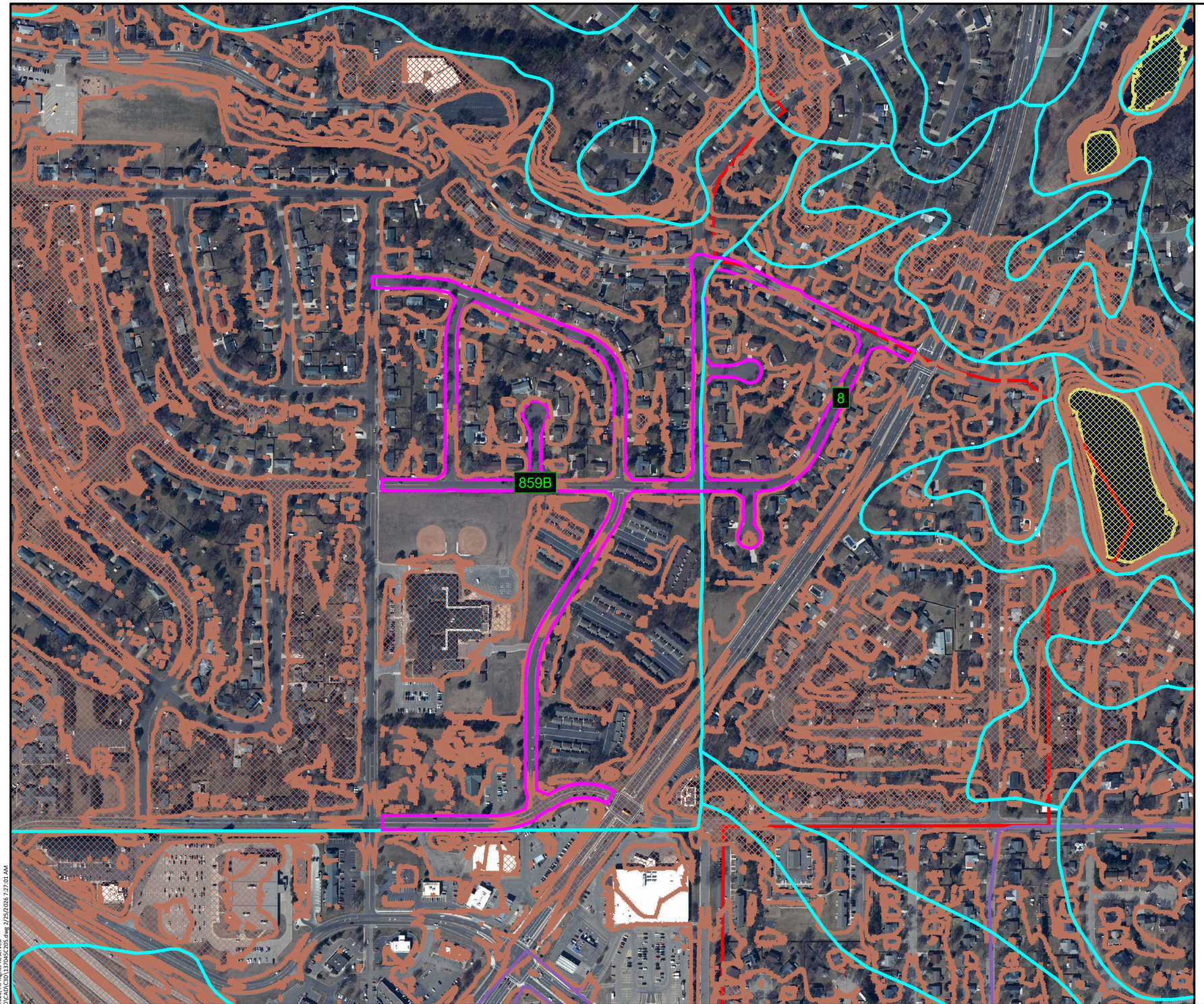


## LEGEND

- PROJECT BOUNDARY
- SOIL TYPE
- IMPAIRED, SPECIAL OR PROTECTED WATERS
- NATIONAL WETLANDS INVENTORY
- STEEP SLOPES (>33.3%)

N

0 200 400
SCALE FEET

| MUSYM | FREQUENCY | MUNAME | COMPNAME | HYDGRP |
|---|---|---|---|---|
| 8 | 1 | Sparta loamy sand, 0 to 2 percent slopes | Sparta | A |
| 859B | 1 | Urban land-Zimmerman complex, 1 to 8 percent slopes | Urban land, Zimmerman | |

©Bolton & Menk, Inc. 2026. All Rights Reserved
H:\COTT\24x13\7045600\CAD\C3D\137045C205.dwg 2/25/2026 7:27:01 AM

I HEREBY CERTIFY THAT THIS PLAN, SPECIFICATION, OR REPORT WAS PREPARED BY ME OR UNDER MY DIRECT SUPERVISION AND THAT I AM A DULY LICENSED PROFESSIONAL ENGINEER UNDER THE LAWS OF THE STATE OF MINNESOTA.

MICHAEL J BOEX
LIC. NO. 44576 DATE MM/DD/YYYY

BOLTON & MENK
3507 HIGH POINT DRIVE NORTH
BLDG. 1 - SUITE E130
OAKDALE, MN 55128
Phone: (651) 704-9970
Email: Oakdale@bolton-menk.com
www.bolton-menk.com

Cottage Grove
Where Pride and Prosperity Meet

| DESIGNED | ANO |
|---|---|
| DRAWN | BNM |
| CHECKED | MJB |
| CLIENT PROJ. NO. | 137045 |

| NO. | ISSUED FOR | DATE |
|---|---|---|

CITY OF COTTAGE GROVE
2026 PAVEMENT MANAGEMENT PROJECT
STORMWATER POLLUTION PREVENTION PLAN
SWPPP SOILS

SHEET C2.04

CLEAN VALVE BOX

REMOVE AND REPLACE CASTING (R-1642)

CLEAN VALVE BOX

WATERMAIN EVALUATION EXCAVATION

PATCH STRUCTURE - CONE

LEGEND:

SANITARY SEWER LINER
SERVICE T-LINERS

NOTES:
1. ADJUST ALL STRUCTURES WITHIN PAVED AREA (SEE C6.01 - C6.17)

CLEAN VALVE BOX

ADJUST VALVE IN GREENSPACE

CLEAN VALVE BOX

REMOVE AND REPLACE TOP SECTION AND COVER CLEAN VALVE BOX

EXTEND HYDRANT BARREL, 0.5'

CLEAN VALVE BOX

REMOVE AND REPLACE TOP SECTION AND COVER

9" DIA 4' CIPP AT 181' FROM SS2684

9" DIA 8' AT CIPP 146' FROM SS2684

REMOVE AND REPLACE CASTING (R-1642)

SS 2690

SS 2684

SS 2754

SEE SHEET C4.03

SEE SHEET C4.02

SEE SHEET C4.02

Ironwood Ave

Hillside Trail

Isle Ave

Ira Ave

Irish Ave Court

Ironwood Ave

88th Street

8583 8611 8617 8623 8631 8637 8641 8657 8673 8689 8697 8713 8729 8801 8811

8608 8616 8624 8632 8640 8648 8656 8664 8672 8680 8688 8624 8616 8656 8648

8633 8640 8649 8656 8665 8672 8683 8688 8701 8704 8719 8720 8737 8736

8645 8661 8677 8695 8715 8578 8594 8606

8673 8679 8685 8693 8703 8719 8735

8626 8637 8642 8647 8658 8674 8690 8706 8722 8740

8707 8717 8727 8800 8804

8855

19.00 18.00 17.00 16.00

0 50 100
HORZ. SCALE FEET

I HEREBY CERTIFY THAT THIS PLAN, SPECIFICATION, OR REPORT WAS PREPARED BY ME OR UNDER MY DIRECT SUPERVISION AND THAT I AM A DULY LICENSED PROFESSIONAL ENGINEER UNDER THE LAWS OF THE STATE OF MINNESOTA.

MICHAEL J BOEX
LIC. NO. 44576 DATE MM/DD/YYYY

BOLTON & MENK

3507 HIGH POINT DRIVE NORTH
BLDG. 1 - SUITE E130
OAKDALE, MN 55128
Phone: (651) 704-9970
Email: Oakdale@bolton-menk.com
www.bolton-menk.com

Cottage Grove
Where Pride and Prosperity Meet

| DESIGNED | ANO |
|---|---|
| DRAWN | BNM |
| CHECKED | MJB |
| CLIENT PROJ. NO. | 137045 |

| NO. | ISSUED FOR | DATE |
|---|---|---|

CITY OF COTTAGE GROVE
2026 PAVEMENT MANAGEMENT PROJECT
SANITARY SEWER & WATERMAIN IMPROVEMENTS

SHEET C4.01

©Bolton & Menk, Inc. 2026. All Rights Reserved
H:\COTT\24x1\137045000\CAD\C3D\137045C401.dwg 2/25/2026 6:29:48 AM

SEE SHEET C4.01

SS 2177

CLEAN VALVE BOX

REMOVE AND REPLACE TOP SECTION AND COVER

REMOVE AND REPLACE CASTING (R-1642)

PATCH CONE SECTION ADD STEP

ADJUST TOPSLAB

REMOVE AND REPLACE TOP SECTION AND COVER

REMOVE AND REPLACE TOP SECTION AND COVER
RECONSTRUCT VALVE BOX - MID SECTION
CLEAN VALVE BOX

ADJUST TOPSLAB

REMOVE AND REPLACE TOP SECTION AND COVER

Isle Ave

88th Street

Ivywood Ave

Ivan Ave

Hillside Trail

Jamaica Ave

Upper 89th St Cir

LEGEND:

SANITARY SEWER LINER
SERVICE T-LINERS

NOTES:

1. ADJUST ALL STRUCTURES WITHIN PAVED AREA (SEE C6.01 - C6.17)

©Bolton & Menk, Inc. 2026, All Rights Reserved
H:\COTT\124X137045000\CAD\C3D\137045C401.dwg 2/25/2026 6:30:15 AM

HORZ. 0 50 100 SCALE FEET

I HEREBY CERTIFY THAT THIS PLAN, SPECIFICATION, OR REPORT WAS PREPARED BY ME OR UNDER MY DIRECT SUPERVISION AND THAT I AM A DULY LICENSED PROFESSIONAL ENGINEER UNDER THE LAWS OF THE STATE OF MINNESOTA.

MICHAEL J BOEX
LIC. NO. 44576 DATE MM/DD/YYYY

BOLTON & MENK
3507 HIGH POINT DRIVE NORTH
BLDG. 1 - SUITE E130
OAKDALE, MN 55128
Phone: (651) 704-9970
Email: Oakdale@bolton-menk.com
www.bolton-menk.com

Cottage Grove
Where Pride and Prosperity Meet

| DESIGNED | NO. | ISSUED FOR | DATE |
|---|---|---|---|
| ANO | | | |
| DRAWN | | | |
| BNM | | | |
| CHECKED | | | |
| MJB | | | |
| CLIENT PROJ. NO. | | | |
| 137045 | | | |

CITY OF COTTAGE GROVE
2026 PAVEMENT MANAGEMENT PROJECT
SANITARY SEWER & WATERMAIN IMPROVEMENTS

SHEET C4.02

LEGEND:

SANITARY SEWER LINER

SERVICE T-LINERS

NOTES:

1. ADJUST ALL STRUCTURES WITHIN PAVED AREA (SEE C6.01 - C6.17)

©Bolton & Menk, Inc. 2026. All Rights Reserved
H:\CITY\2Ax1370450001\CAD\C3D\137045C401.dwg 2/25/2026 6:31:09 AM

HORZ. SCALE 0 50 100 FEET

I HEREBY CERTIFY THAT THIS PLAN, SPECIFICATION, OR REPORT WAS PREPARED BY ME OR UNDER MY DIRECT SUPERVISION AND THAT I AM A DULY LICENSED PROFESSIONAL ENGINEER UNDER THE LAWS OF THE STATE OF MINNESOTA.

MICHAEL J BOEX

LIC. NO. 44576 DATE MM/DD/YYYY

BOLTON & MENK
3507 HIGH POINT DRIVE NORTH
BLDG. 1 - SUITE E130
OAKDALE, MN 55128
Phone: (651) 704-9970
Email: Oakdale@bolton-menk.com
www.bolton-menk.com

Cottage Grove
Where Pride and Prosperity Meet

| | |
|---|---|
| DESIGNED | ANO |
| DRAWN | BNM |
| CHECKED | MJB |
| CLIENT PROJ. NO. | 137045 |

| NO. | ISSUED FOR | DATE |
|---|---|---|

CITY OF COTTAGE GROVE

2026 PAVEMENT MANAGEMENT PROJECT

SANITARY SEWER & WATERMAIN IMPROVEMENTS

SHEET C4.03

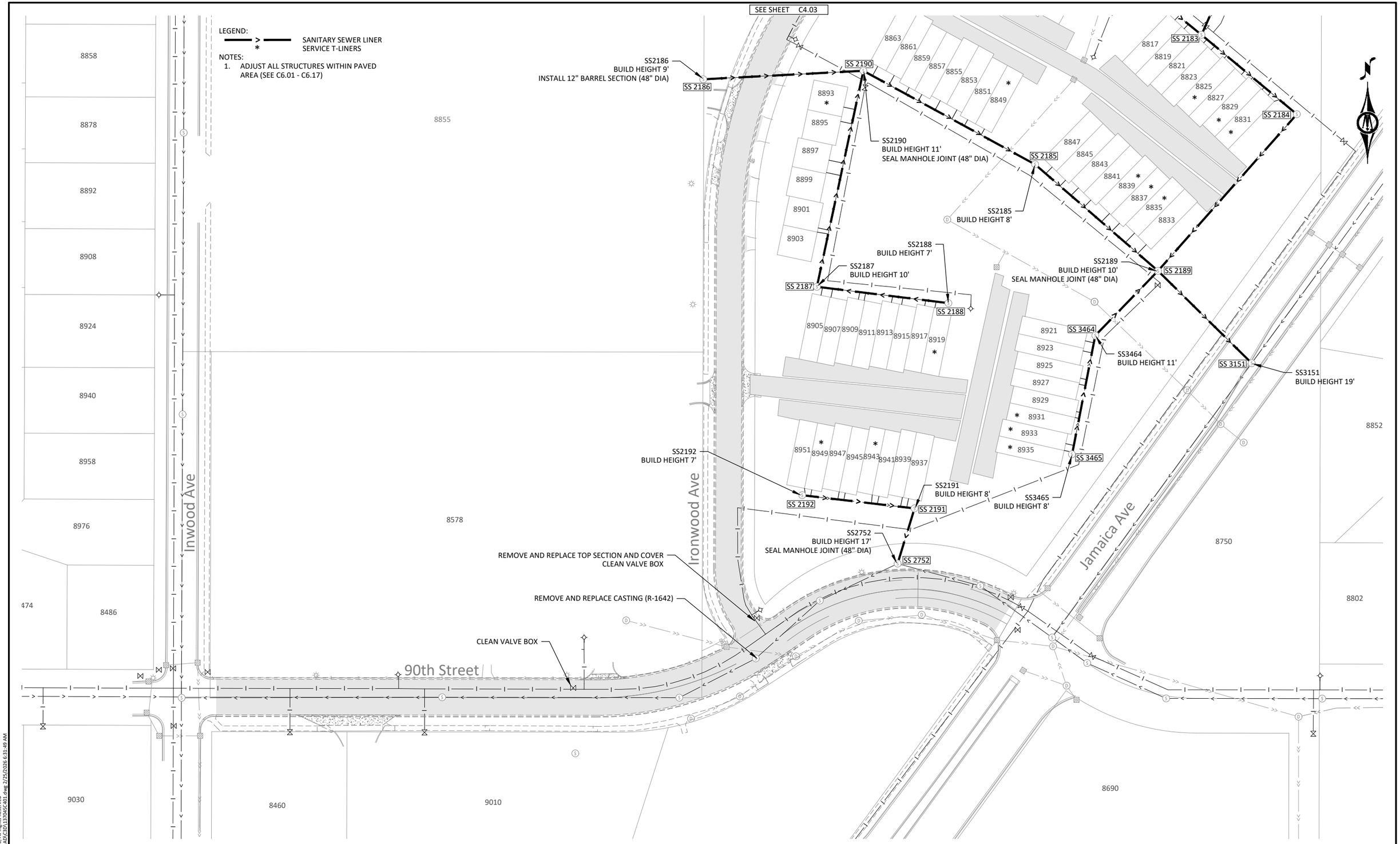


HORZ. 0 50 100
SCALE FEET

I HEREBY CERTIFY THAT THIS PLAN, SPECIFICATION, OR REPORT WAS PREPARED BY ME OR UNDER MY DIRECT SUPERVISION AND THAT I AM A DULY LICENSED PROFESSIONAL ENGINEER UNDER THE LAWS OF THE STATE OF MINNESOTA.

MICHAEL J BOEX
LIC. NO. 44576 DATE MM/DD/YYYY

BOLTON & MENK


3507 HIGH POINT DRIVE NORTH
BLDG. 1 - SUITE E130
OAKDALE, MN 55128
Phone: (651) 704-9970
Email: Oakdale@bolton-menk.com
www.bolton-menk.com


Cottage Grove
Where Pride and Prosperity Meet

| | |
|---|---|
| DESIGNED | ANO |
| DRAWN | BNM |
| CHECKED | MJB |
| CLIENT PROJ. NO. | 137045 |

| NO. | ISSUED FOR | DATE |
|---|---|---|

CITY OF COTTAGE GROVE
2026 PAVEMENT MANAGEMENT PROJECT
SANITARY SEWER & WATERMAIN IMPROVEMENTS

SHEET C4.04


© Bolton & Menk, Inc. 2026, All Rights Reserved
H:\COTT\24X137045000\CAD\C3D\137045C401.dwg 2/25/2026 6:31:49 AM

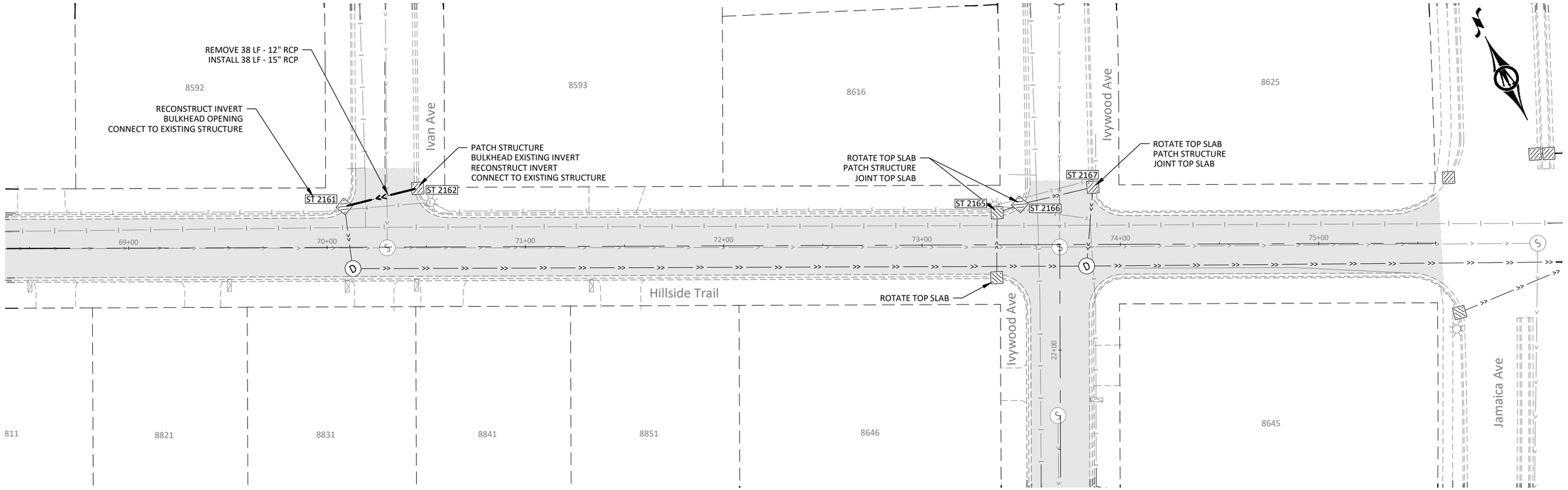


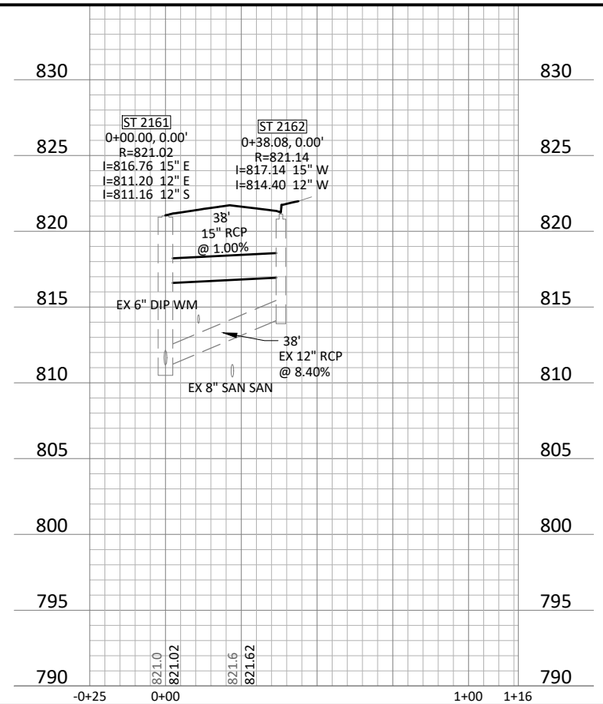


©Bolton & Menk, Inc. 2026. All Rights Reserved
H:\CITY\24X1370450000\CAD\C3D\137045C501.dwg 2/25/2026 6:32:11 AM

HORZ. 0 25 50 SCALE FEET

VERT. 0 5 10 SCALE FEET

I HEREBY CERTIFY THAT THIS PLAN, SPECIFICATION, OR REPORT WAS PREPARED BY ME OR UNDER MY DIRECT SUPERVISION AND THAT I AM A DULY LICENSED PROFESSIONAL ENGINEER UNDER THE LAWS OF THE STATE OF MINNESOTA.

MICHAEL J BOEX
LIC. NO. 44576 DATE MM/DD/YYYY

BOLTON & MENK
3507 HIGH POINT DRIVE NORTH
BLDG. 1 - SUITE E130
OAKDALE, MN 55128
Phone: (651) 704-9970
Email: Oakdale@bolton-menk.com
www.bolton-menk.com

Cottage Grove
Where Pride and Prosperity Meet

| | |
|---|---|
| DESIGNED | ANO |
| DRAWN | BNM |
| CHECKED | MJB |
| CLIENT PROJ. NO. | 137045 |

| NO. | ISSUED FOR | DATE |
|---|---|---|
| | | |

CITY OF COTTAGE GROVE
2026 PAVEMENT MANAGEMENT PROJECT
STORM SEWER IMPROVEMENTS

SHEET C5.01

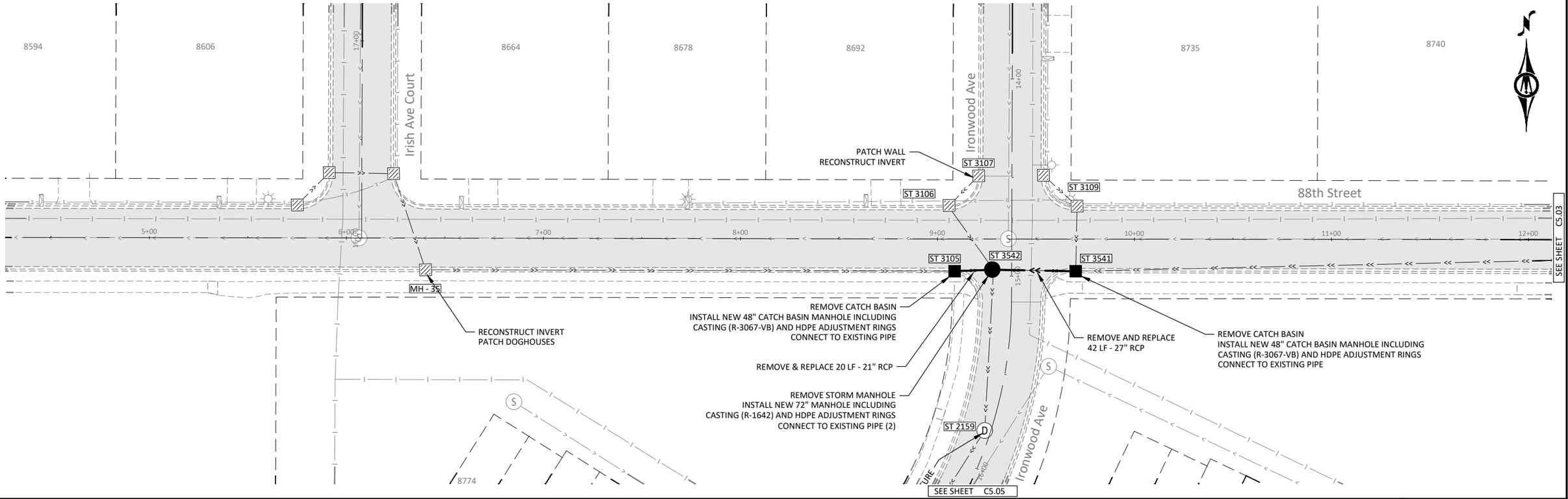


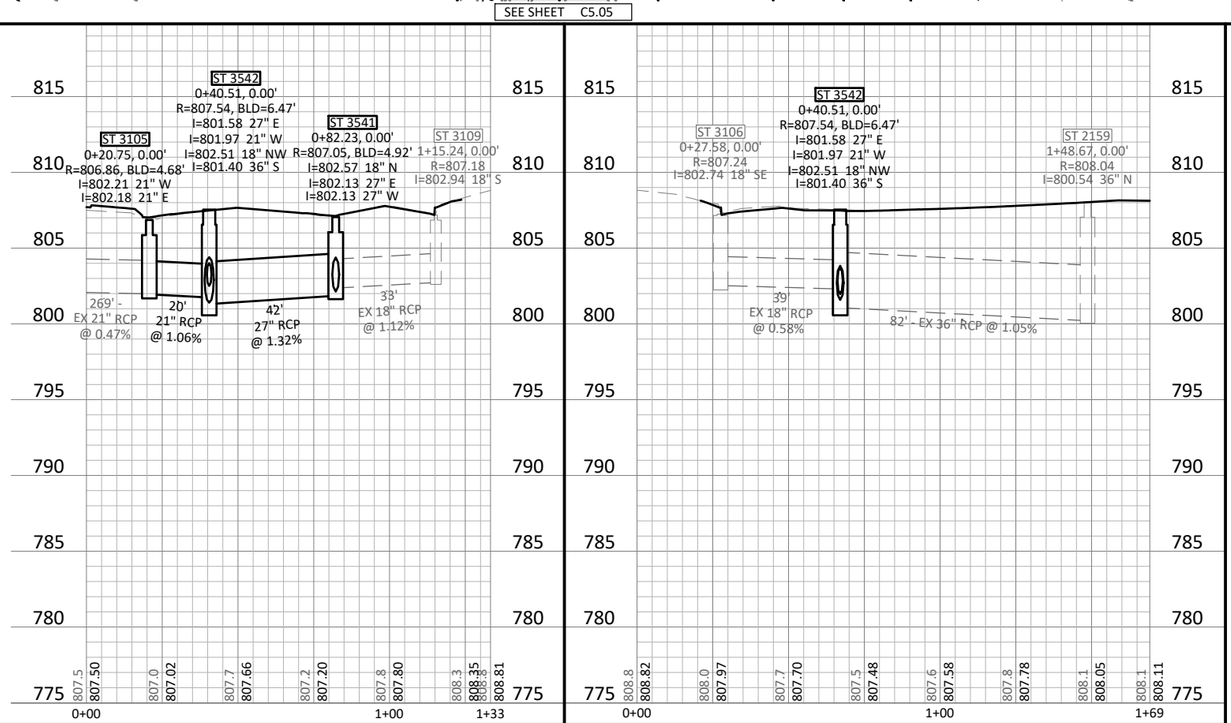


©Bolton & Menk, Inc. 2026. All Rights Reserved
H:\CITY\24X\137045000\CAD\C3D\137045C501.dwg 2/25/2026 6:52:20 AM

HORZ. 0 25 50 SCALE FEET
VERT. 0 5 10 SCALE FEET

I HEREBY CERTIFY THAT THIS PLAN, SPECIFICATION, OR REPORT WAS PREPARED BY ME OR UNDER MY DIRECT SUPERVISION AND THAT I AM A DULY LICENSED PROFESSIONAL ENGINEER UNDER THE LAWS OF THE STATE OF MINNESOTA.

MICHAEL J BOEX
LIC. NO. 44576 DATE MM/DD/YYYY

BOLTON & MENK
3507 HIGH POINT DRIVE NORTH
BLDG. 1 - SUITE E130
OAKDALE, MN 55128
Phone: (651) 704-9970
Email: Oakdale@bolton-menk.com
www.bolton-menk.com

Cottage Grove
Where Pride and Prosperity Meet

| DESIGNED | ANO |
|---|---|
| DRAWN | BNM |
| CHECKED | MJB |
| CLIENT PROJ. NO. | 137045 |

| NO. | ISSUED FOR | DATE |
|---|---|---|

CITY OF COTTAGE GROVE
2026 PAVEMENT MANAGEMENT PROJECT
STORM SEWER IMPROVEMENTS

SHEET C5.02

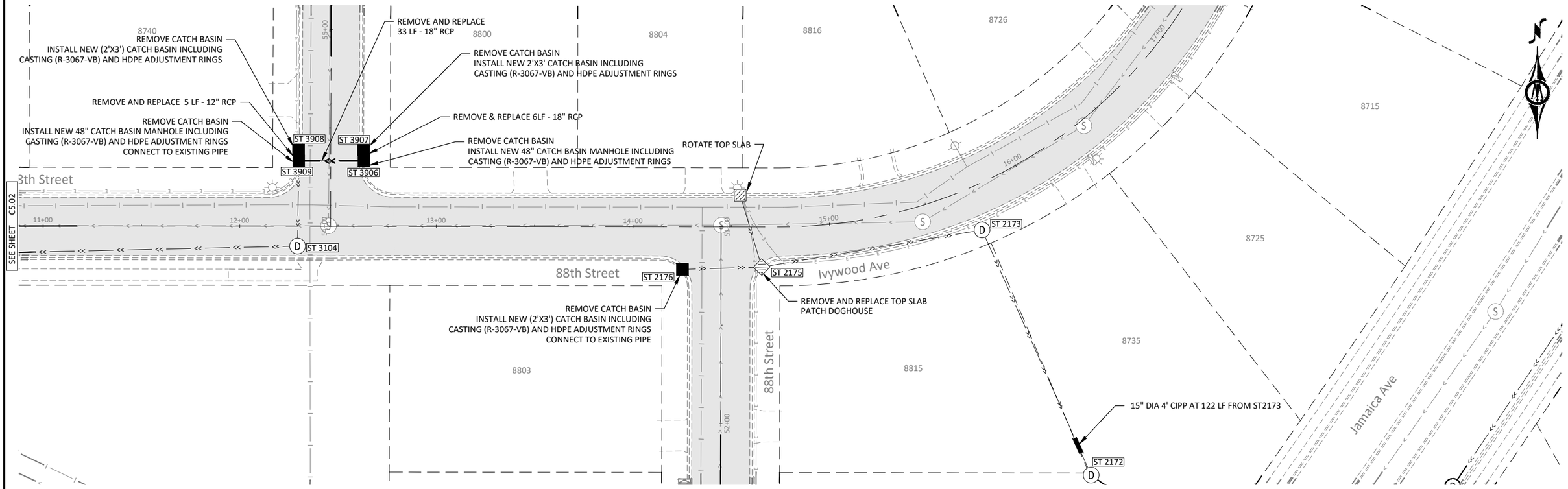


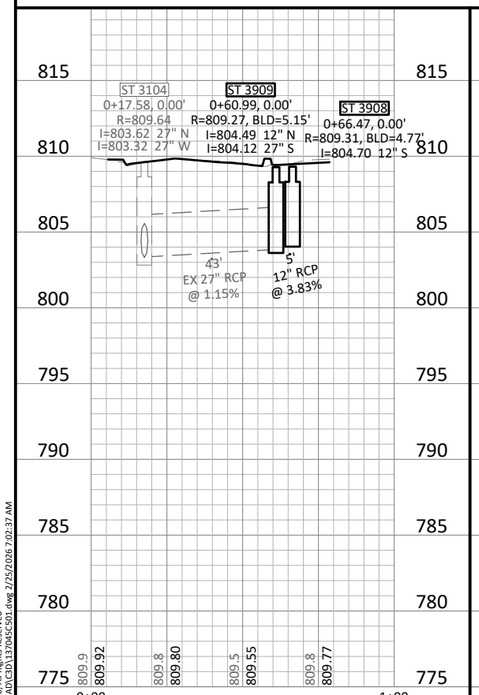


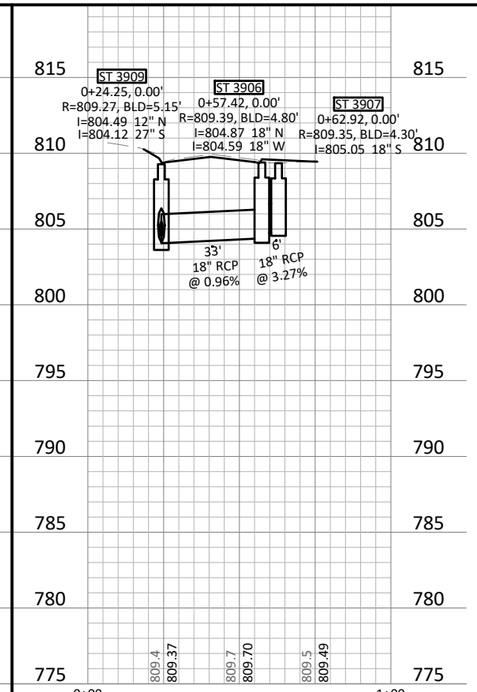


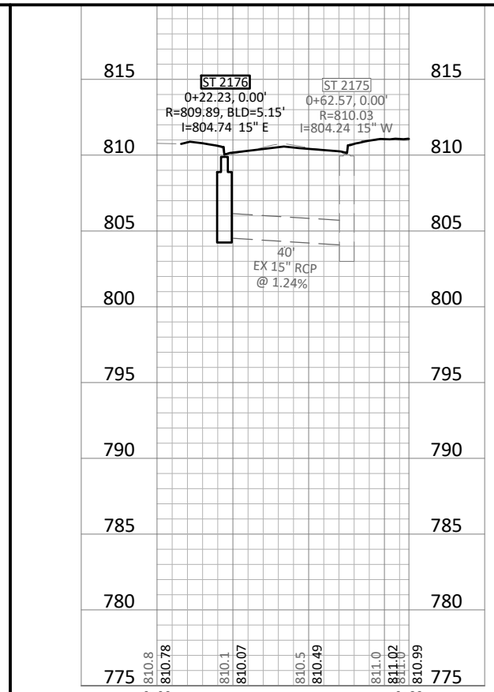


©Bolton & Menk, Inc. 2026. All Rights Reserved
H:\CITY\24X\137045000\CAD\C3D\137045C501.dwg 2/25/2026 7:02:37 AM

HORZ. SCALE 0 25 50 FEET
VERT. SCALE 0 5 10 FEET

I HEREBY CERTIFY THAT THIS PLAN, SPECIFICATION, OR REPORT WAS PREPARED BY ME OR UNDER MY DIRECT SUPERVISION AND THAT I AM A DULY LICENSED PROFESSIONAL ENGINEER UNDER THE LAWS OF THE STATE OF MINNESOTA.

MICHAEL J BOEX
LIC. NO. 44576 DATE MM/DD/YYYY

BOLTON & MENK
3507 HIGH POINT DRIVE NORTH
BLDG. 1 - SUITE E130
OAKDALE, MN 55128
Phone: (651) 704-9970
Email: Oakdale@bolton-menk.com
www.bolton-menk.com

Cottage Grove
Where Pride and Prosperity Meet

| | |
|---|---|
| DESIGNED | ANO |
| DRAWN | BNM |
| CHECKED | MJB |
| CLIENT PROJ. NO. | 137045 |

| NO. | ISSUED FOR | DATE |
|---|---|---|
| | | |

CITY OF COTTAGE GROVE
2026 PAVEMENT MANAGEMENT PROJECT
STORM SEWER IMPROVEMENTS

SHEET C5.03

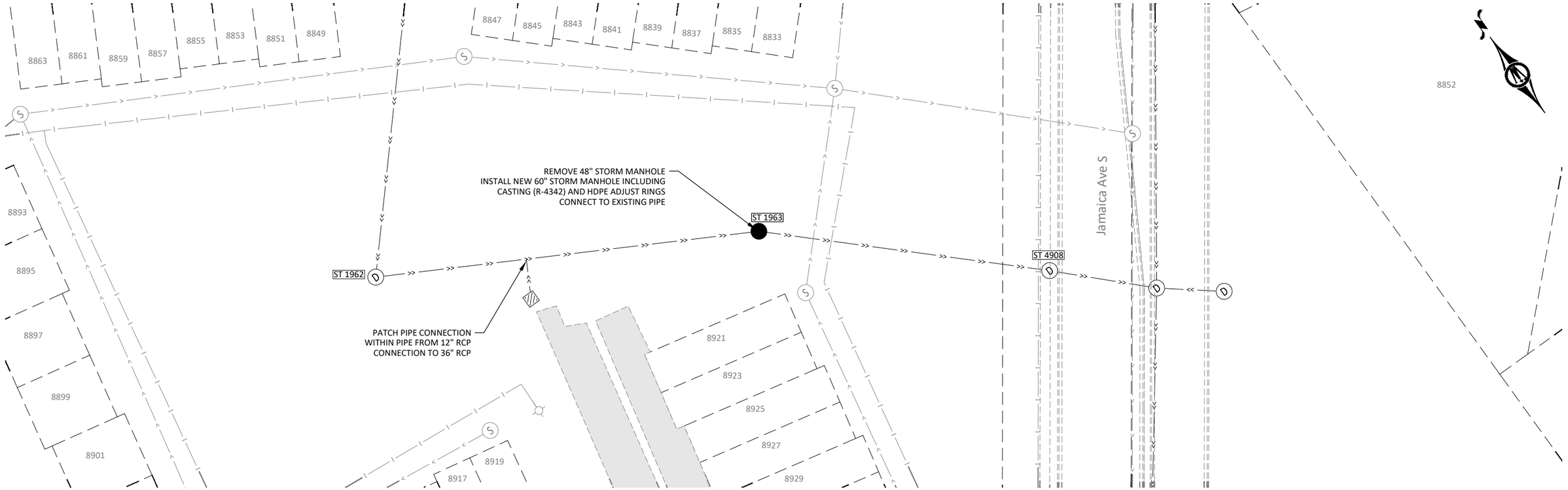


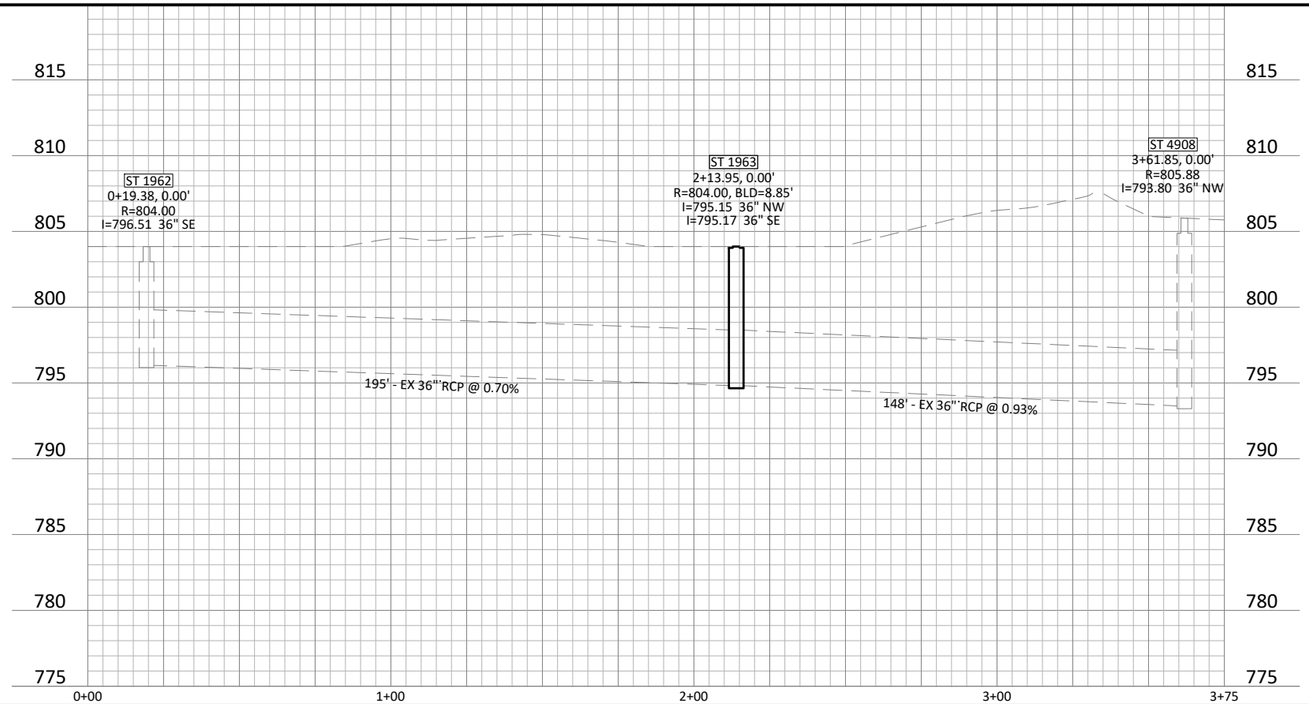


HORZ. 0 25 50 SCALE FEET

VERT. 0 5 10 SCALE FEET

I HEREBY CERTIFY THAT THIS PLAN, SPECIFICATION, OR REPORT WAS PREPARED BY ME OR UNDER MY DIRECT SUPERVISION AND THAT I AM A DULY LICENSED PROFESSIONAL ENGINEER UNDER THE LAWS OF THE STATE OF MINNESOTA.

MICHAEL J BOEX

LIC. NO. 44576 DATE MM/DD/YYYY


BOLTON & MENK

3507 HIGH POINT DRIVE NORTH
BLDG. 1 - SUITE E130
OAKDALE, MN 55128
Phone: (651) 704-9970
Email: Oakdale@bolton-menk.com
www.bolton-menk.com


Cottage Grove
Where Pride and Prosperity Meet

| | |
|---|---|
| DESIGNED | ANO |
| DRAWN | BNM |
| CHECKED | MJB |
| CLIENT PROJ. NO. | 137045 |

| NO. | ISSUED FOR | DATE |
|---|---|---|

CITY OF COTTAGE GROVE

2026 PAVEMENT MANAGEMENT PROJECT

STORM SEWER IMPROVEMENTS

SHEET C5.04


© Bolton & Menk, Inc. 2026, All Rights Reserved
H:\COTT\24X137045000\CAD\C3D\137045C501.dwg 2/25/2026 7:09:03 AM

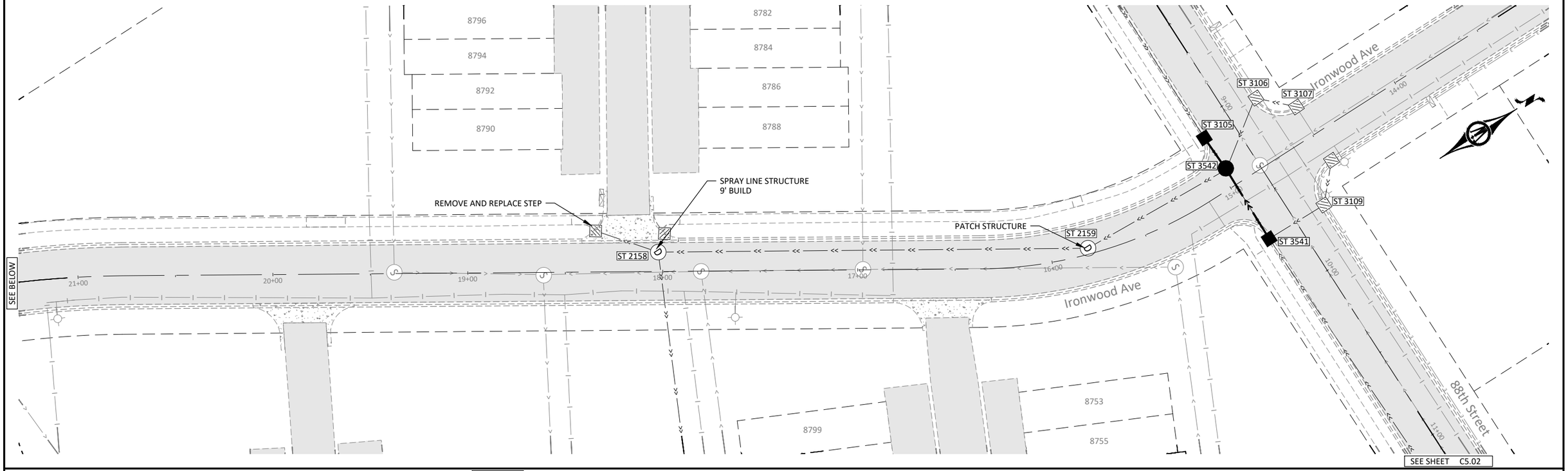


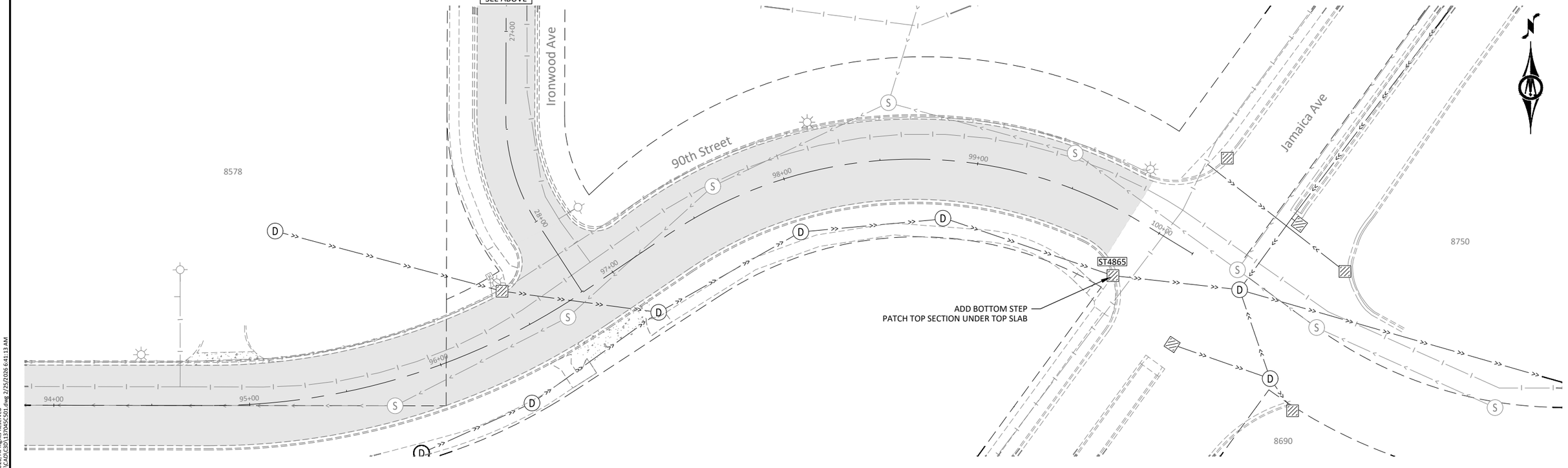


©Bolton & Menk, Inc. 2026. All Rights Reserved
H:\COTT\24X\137045001\CAD\C3D\137045C501.dwg 2/25/2026 6:41:13 AM

HORZ. 0 25 50 SCALE FEET

VERT. 0 5 10 SCALE FEET

I HEREBY CERTIFY THAT THIS PLAN, SPECIFICATION, OR REPORT WAS PREPARED BY ME OR UNDER MY DIRECT SUPERVISION AND THAT I AM A DULY LICENSED PROFESSIONAL ENGINEER UNDER THE LAWS OF THE STATE OF MINNESOTA.

MICHAEL J BOEX
LIC. NO. 44576 DATE MM/DD/YYYY

BOLTON & MENK
3507 HIGH POINT DRIVE NORTH
BLDG. 1 - SUITE E130
OAKDALE, MN 55128
Phone: (651) 704-9970
Email: Oakdale@bolton-menk.com
www.bolton-menk.com

Cottage Grove
Where Pride and Prosperity Meet

| DESIGNED | ANO |
|---|---|
| DRAWN | BNM |
| CHECKED | MJB |
| CLIENT PROJ. NO. | 137045 |

| NO. | ISSUED FOR | DATE |
|---|---|---|

CITY OF COTTAGE GROVE
2026 PAVEMENT MANAGEMENT PROJECT
STORM SEWER IMPROVEMENTS

SHEET C5.05

FULL DEPTH PAVEMENT REMOVAL AND REPLACEMENT WITH FULL AND GUTTER REPLACEMENT
SEE TYPICAL SECTIONS ON SHEET C1.01

NOTES.
1. STREET PROFILES REPRESENT THE EXISTING CENTERLINE GRADES
2. PATCH DRIVEWAYS AT CURB REPLACEMENT LOCATION PER STANDARD DETAIL STR-20
3. REPLACE TOP SECTIONS ON ALL GATE VALVES AS PART OF ADJUSTMENT.
4. REPLACE ALL STRUCTURE ADJUSTMENT RINGS ON ALL STRUCTURES WITHIN PAVEMENT
5. EXISTING CATCH BASIN RINGS TO BE REPLACED OR LINED AS DETERMINED BY ENGINEER IN THE FIELD.
6. COORDINATE SERVICE LOCATIONS FOR S&W STAMPS PRIOR TO CURB REPLACEMENT

S D ADJUST STRUCTURES

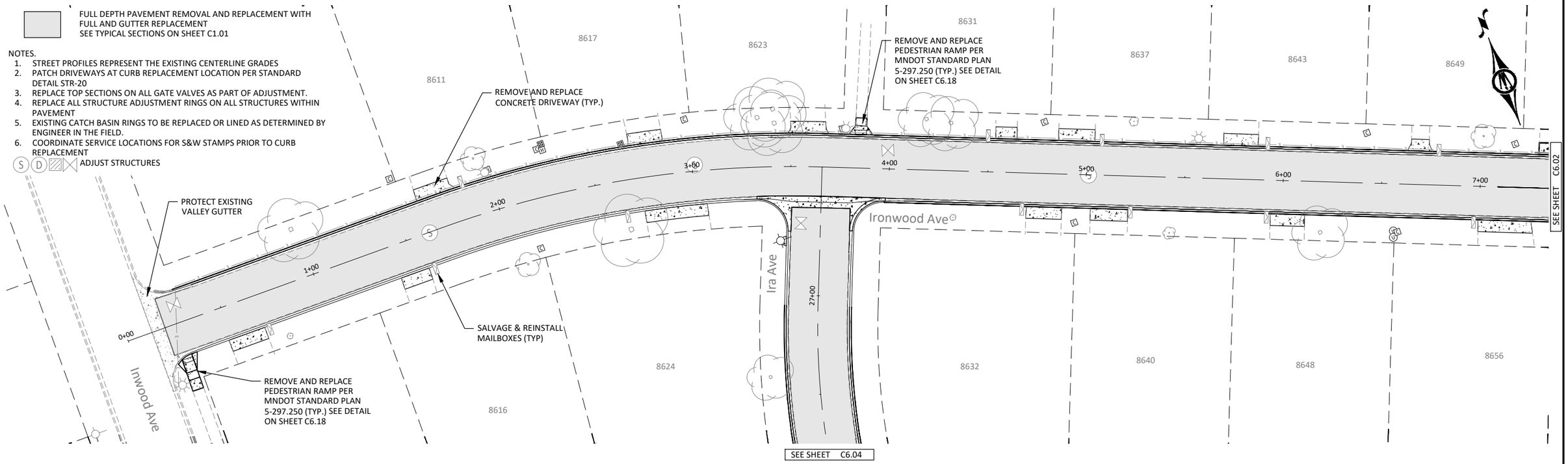


# IRONWOOD AVE

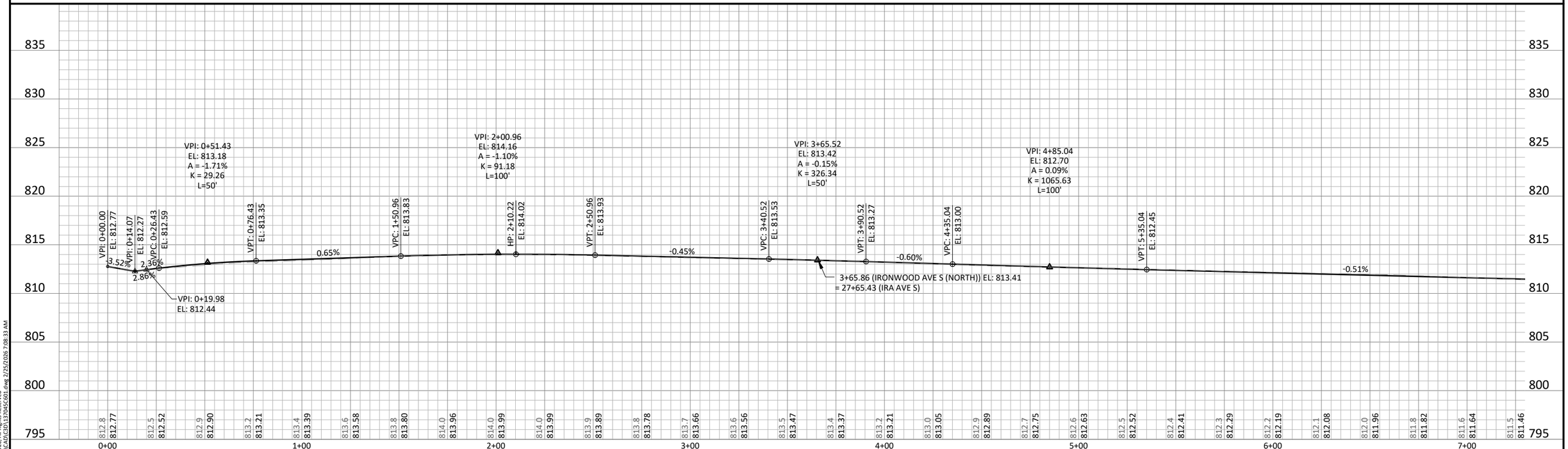


HORZ. 0 25 50 SCALE FEET
VERT. 0 5 10 SCALE FEET

I HEREBY CERTIFY THAT THIS PLAN, SPECIFICATION, OR REPORT WAS PREPARED BY ME OR UNDER MY DIRECT SUPERVISION AND THAT I AM A DULY LICENSED PROFESSIONAL ENGINEER UNDER THE LAWS OF THE STATE OF MINNESOTA.
MICHAEL J BOEX
LIC. NO. 44576 DATE MM/DD/YYYY


BOLTON & MENK
3507 HIGH POINT DRIVE NORTH
BLDG. 1 - SUITE E130
OAKDALE, MN 55128
Phone: (651) 704-9970
Email: Oakdale@bolton-menk.com
www.bolton-menk.com


Cottage Grove
Where Pride and Prosperity Meet

| DESIGNED | ANO |
|---|---|
| DRAWN | BNM |
| CHECKED | MJB |
| CLIENT PROJ. NO. | 137045 |

| NO. | ISSUED FOR | DATE |
|---|---|---|

CITY OF COTTAGE GROVE
2026 PAVEMENT MANAGEMENT PROJECT
STREET IMPROVEMENTS
IRONWOOD AVENUE NORTH

SHEET C6.01


©Bolton & Menk, Inc. 2026. All Rights Reserved

H:\COTT\24X\137045000\CAD\C3D\137045C601.dwg 2/25/2026 7:08:33 AM

FULL DEPTH PAVEMENT REMOVAL AND REPLACEMENT WITH FULL AND GUTTER REPLACEMENT
SEE TYPICAL SECTIONS ON SHEET C1.01

NOTES.
1. STREET PROFILES REPRESENT THE EXISTING CENTERLINE GRADES
2. PATCH DRIVEWAYS AT CURB REPLACEMENT LOCATION PER STANDARD DETAIL STR-20
3. REPLACE TOP SECTIONS ON ALL GATE VALVES AS PART OF ADJUSTMENT.
4. REPLACE ALL STRUCTURE ADJUSTMENT RINGS ON ALL STRUCTURES WITHIN PAVEMENT
5. EXISTING CATCH BASIN RINGS TO BE REPLACED OR LINED AS DETERMINED BY ENGINEER IN THE FIELD.
6. COORDINATE SERVICE LOCATIONS FOR S&W STAMPS PRIOR TO CURB REPLACEMENT

(S) (D) ADJUST STRUCTURES

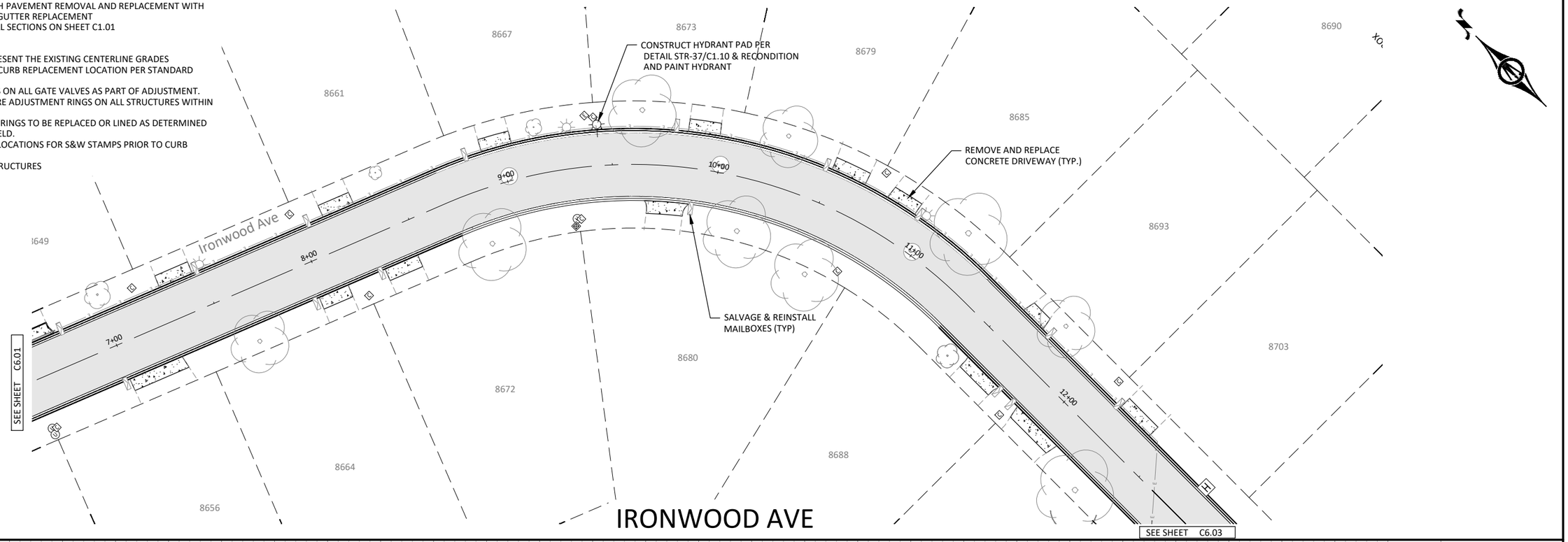


# IRONWOOD AVE

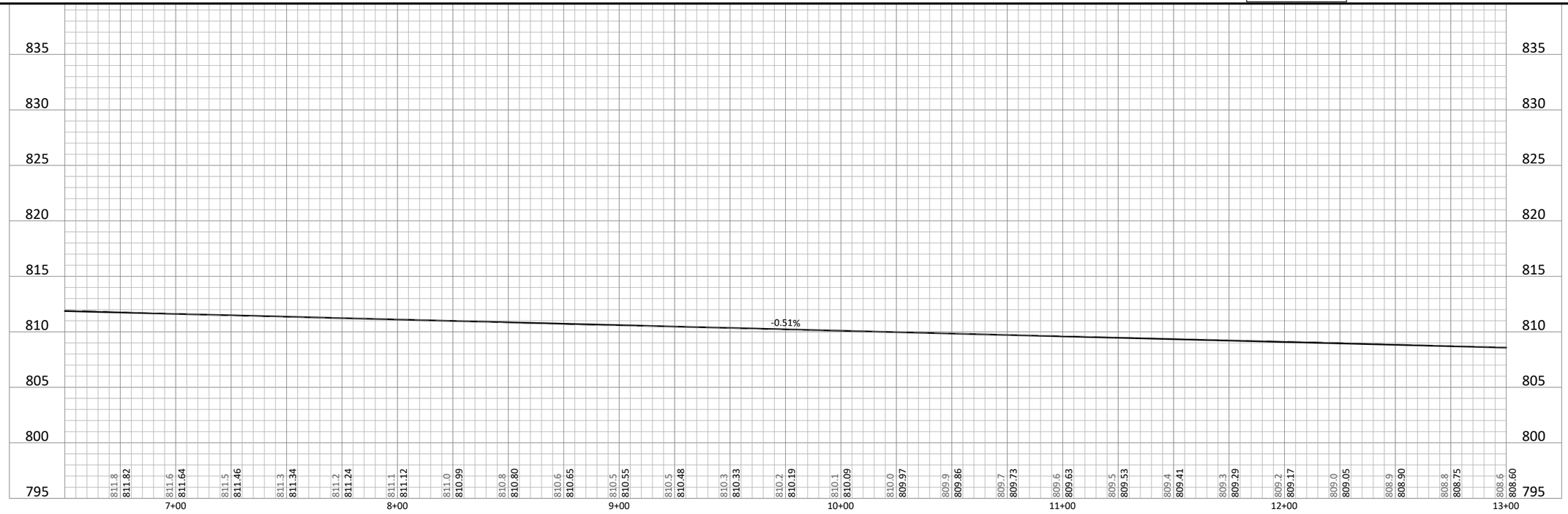


HORZ. 0 25 50 SCALE FEET
VERT. 0 5 10 SCALE FEET

I HEREBY CERTIFY THAT THIS PLAN, SPECIFICATION, OR REPORT WAS PREPARED BY ME OR UNDER MY DIRECT SUPERVISION AND THAT I AM A DULY LICENSED PROFESSIONAL ENGINEER UNDER THE LAWS OF THE STATE OF MINNESOTA.
MICHAEL J BOEX
LIC. NO. 44576 DATE MM/DD/YYYY


BOLTON & MENK
3507 HIGH POINT DRIVE NORTH
BLDG. 1 - SUITE E130
OAKDALE, MN 55128
Phone: (651) 704-9970
Email: Oakdale@bolton-menk.com
www.bolton-menk.com


Cottage Grove
Where Pride and Prosperity Meet

| DESIGNED | ANO |
|---|---|
| DRAWN | BNM |
| CHECKED | MJB |
| CLIENT PROJ. NO. | 137045 |

| NO. | ISSUED FOR | DATE |
|---|---|---|

CITY OF COTTAGE GROVE
2026 PAVEMENT MANAGEMENT PROJECT
STREET IMPROVEMENTS
IRONWOOD AVENUE NORTH

SHEET C6.02


©Bolton & Menk, Inc. 2026. All Rights Reserved

H:\CITY\2AX\137045001\CAD\C3D\137045C601.dwg 2/25/2026 6:38:53 AM

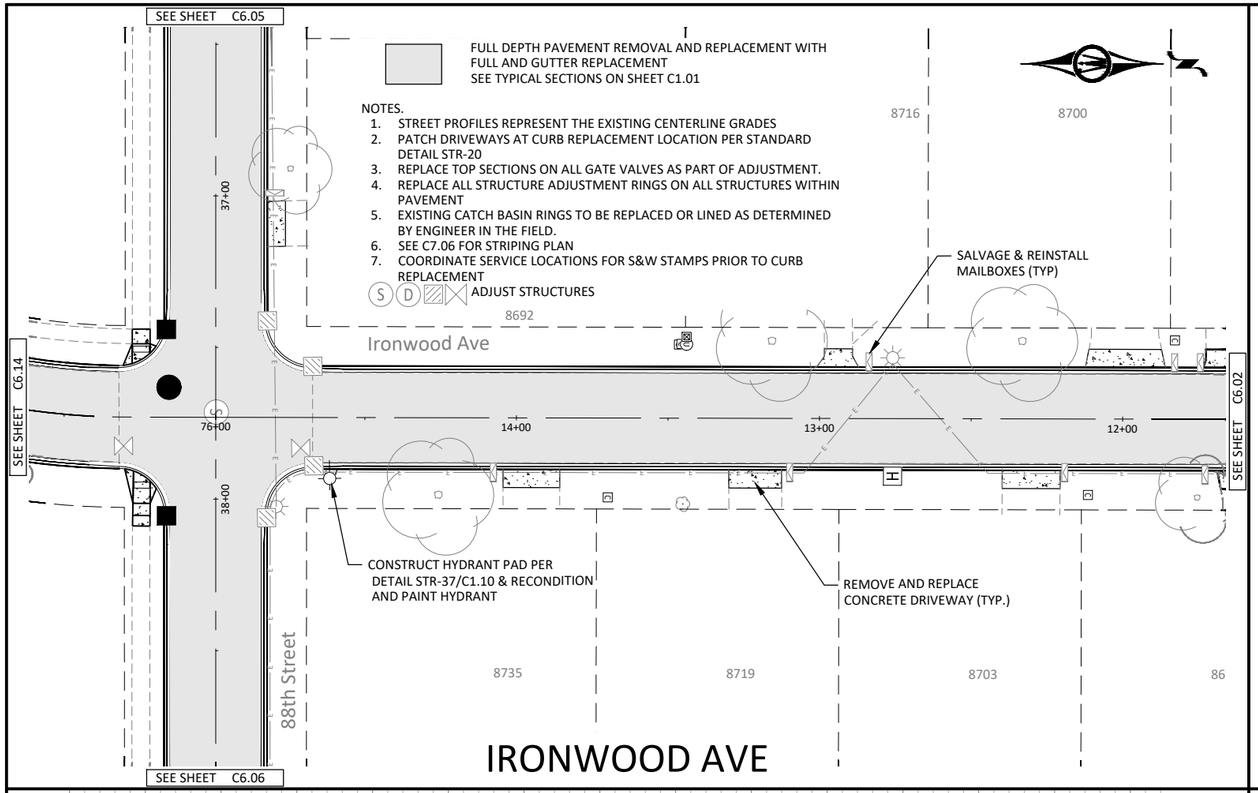


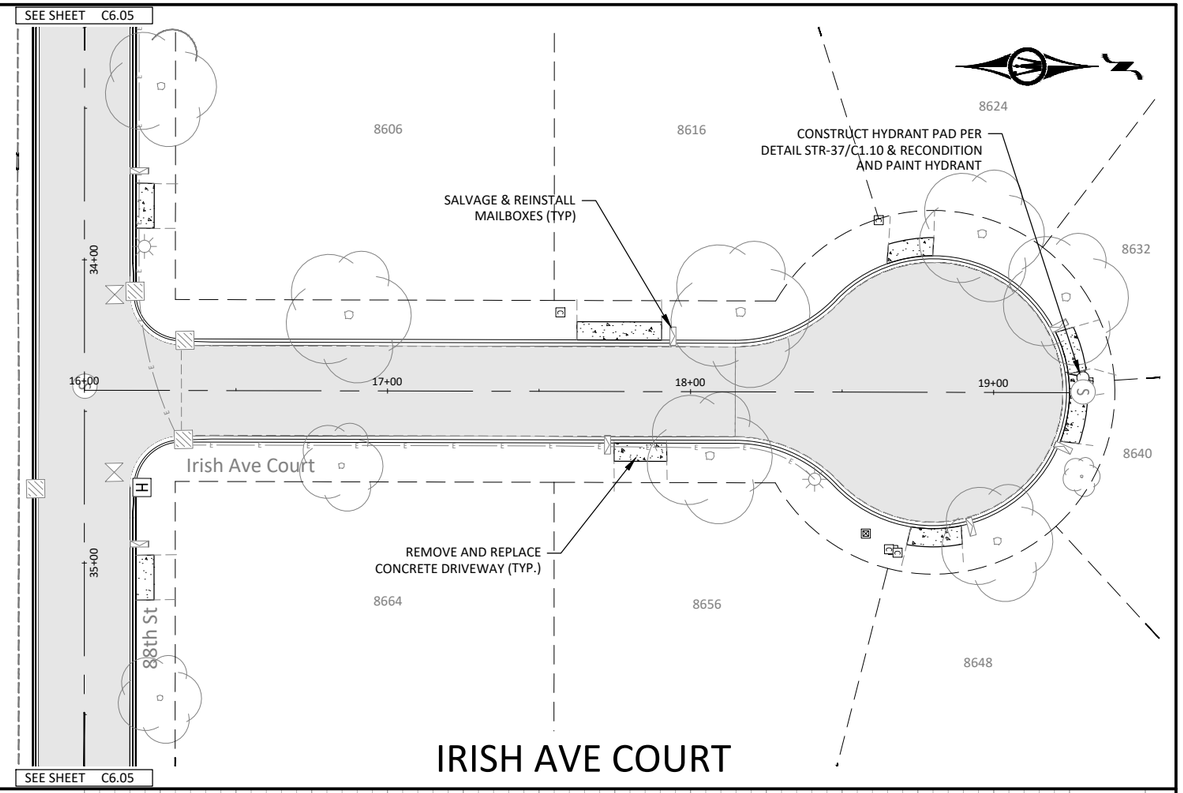


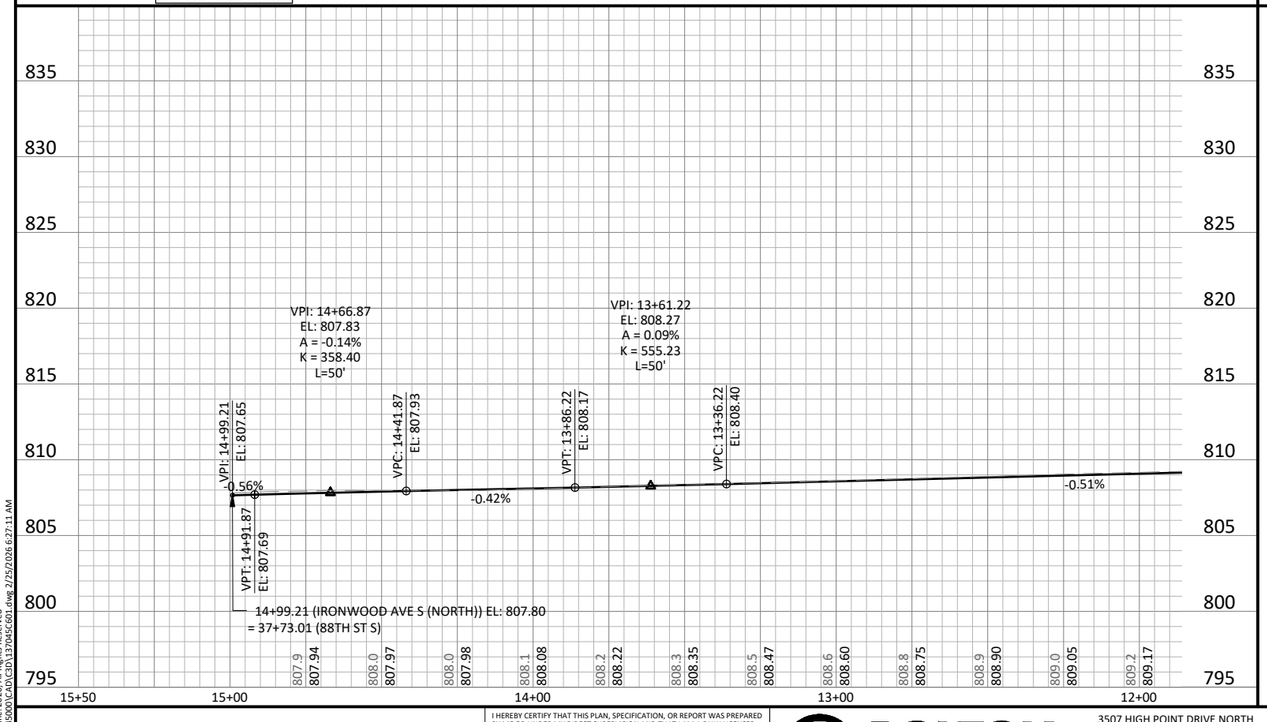


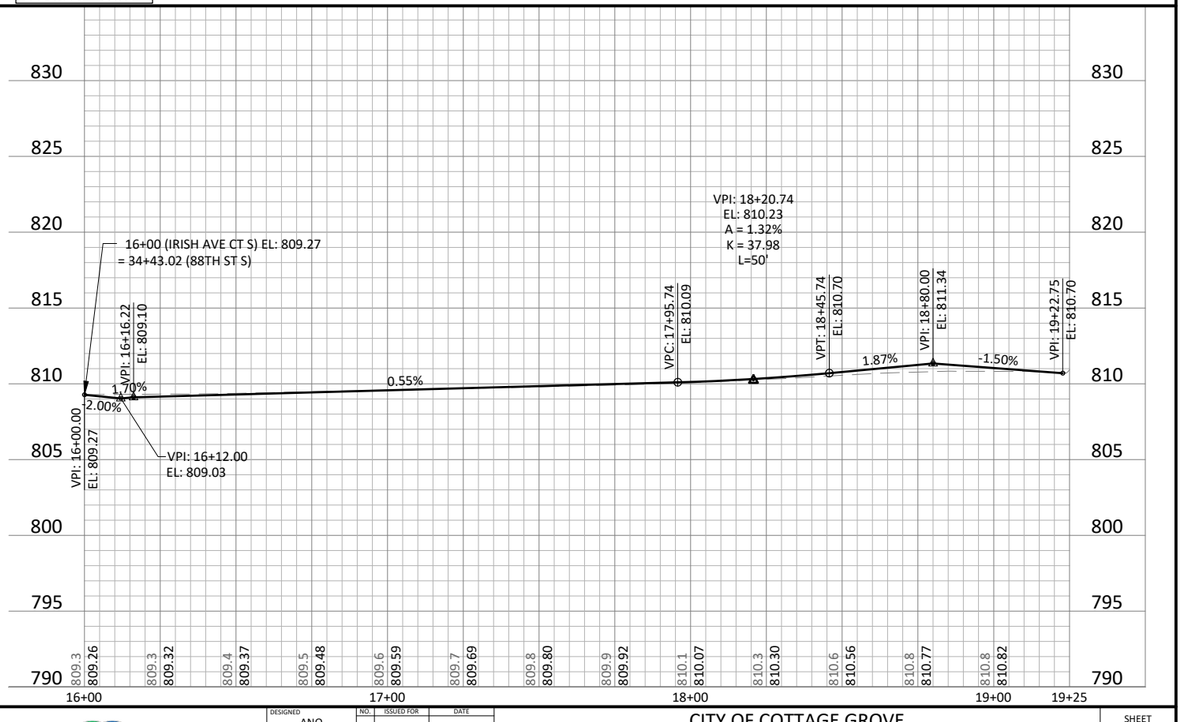


©Bolton & Menk, Inc. 2026. All Rights Reserved
H:\COTT\24X137045000\CAD\C3D\137045C601.dwg 2/25/2026 6:27:11 AM

HORZ. SCALE 0 25 50 FEET
VERT. SCALE 0 5 10 FEET

I HEREBY CERTIFY THAT THIS PLAN, SPECIFICATION, OR REPORT WAS PREPARED BY ME OR UNDER MY DIRECT SUPERVISION AND THAT I AM A DULY LICENSED PROFESSIONAL ENGINEER UNDER THE LAWS OF THE STATE OF MINNESOTA.
MICHAEL J BOEX
LIC. NO. 44576 DATE MM/DD/YYYY

BOLTON & MENK
3507 HIGH POINT DRIVE NORTH
BLDG. 1 - SUITE E130
OAKDALE, MN 55128
Phone: (651) 704-9970
Email: Oakdale@bolton-menk.com
www.bolton-menk.com

Cottage Grove
Where Pride and Prosperity Meet

| DESIGNED | ANO |
|---|---|
| DRAWN | BNM |
| CHECKED | MJB |
| CLIENT PROJ. NO. | 137045 |

| NO. | ISSUED FOR | DATE |
|---|---|---|
| | | |

CITY OF COTTAGE GROVE
2026 PAVEMENT MANAGEMENT PROJECT
STREET IMPROVEMENTS
IRONWOOD AVENUE NORTH

SHEET C6.03

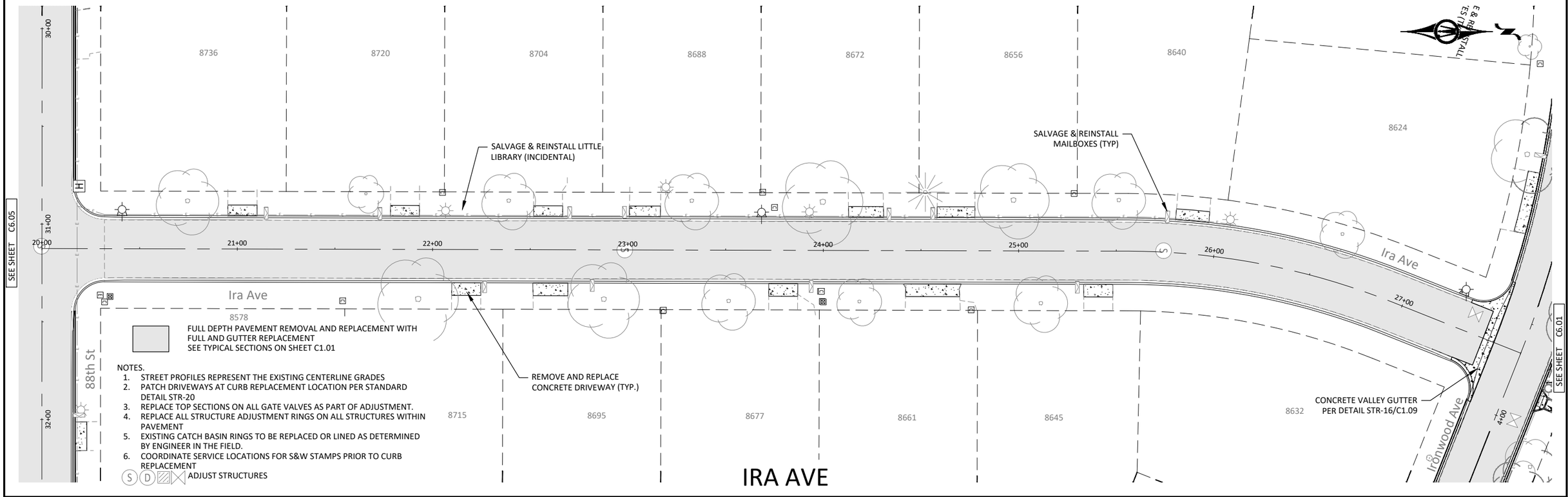

©Bolton & Menk, Inc. 2026. All Rights Reserved
H:\CITY\24X\37045000\CAD\C3D\137045C601.dwg 2/25/2026 7:06:05 AM

HORZ. SCALE 0 25 50 FEET
VERT. SCALE 0 5 10 FEET

I HEREBY CERTIFY THAT THIS PLAN, SPECIFICATION, OR REPORT WAS PREPARED BY ME OR UNDER MY DIRECT SUPERVISION AND THAT I AM A DULY LICENSED PROFESSIONAL ENGINEER UNDER THE LAWS OF THE STATE OF MINNESOTA.
MICHAEL J BOEX
LIC. NO. 44576 DATE MM/DD/YYYY

BOLTON & MENK
3507 HIGH POINT DRIVE NORTH
BLDG. 1 - SUITE E130
OAKDALE, MN 55128
Phone: (651) 704-9970
Email: Oakdale@bolton-menk.com
www.bolton-menk.com

Cottage Grove
Where Pride and Prosperity Meet

| | |
|---|---|
| DESIGNED | ANO |
| DRAWN | BNM |
| CHECKED | MJB |
| CLIENT PROJ. NO. | 137045 |

| NO. | ISSUED FOR | DATE |
|---|---|---|

CITY OF COTTAGE GROVE
2026 PAVEMENT MANAGEMENT PROJECT
STREET IMPROVEMENTS
IRA AVENUE

SHEET C6.04

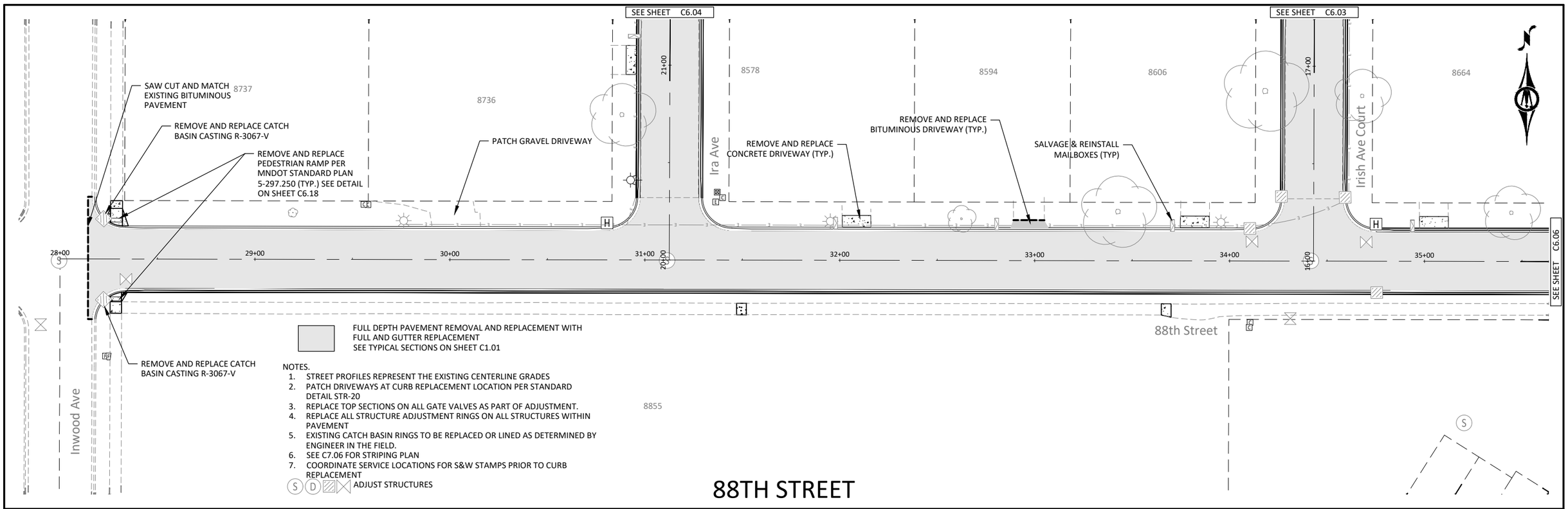


NOTES.

1. STREET PROFILES REPRESENT THE EXISTING CENTERLINE GRADES
2. PATCH DRIVEWAYS AT CURB REPLACEMENT LOCATION PER STANDARD DETAIL STR-20
3. REPLACE TOP SECTIONS ON ALL GATE VALVES AS PART OF ADJUSTMENT.
4. REPLACE ALL STRUCTURE ADJUSTMENT RINGS ON ALL STRUCTURES WITHIN PAVEMENT
5. EXISTING CATCH BASIN RINGS TO BE REPLACED OR LINED AS DETERMINED BY ENGINEER IN THE FIELD.
6. SEE C7.06 FOR STRIPING PLAN
7. COORDINATE SERVICE LOCATIONS FOR S&W STAMPS PRIOR TO CURB REPLACEMENT

# 88TH STREET

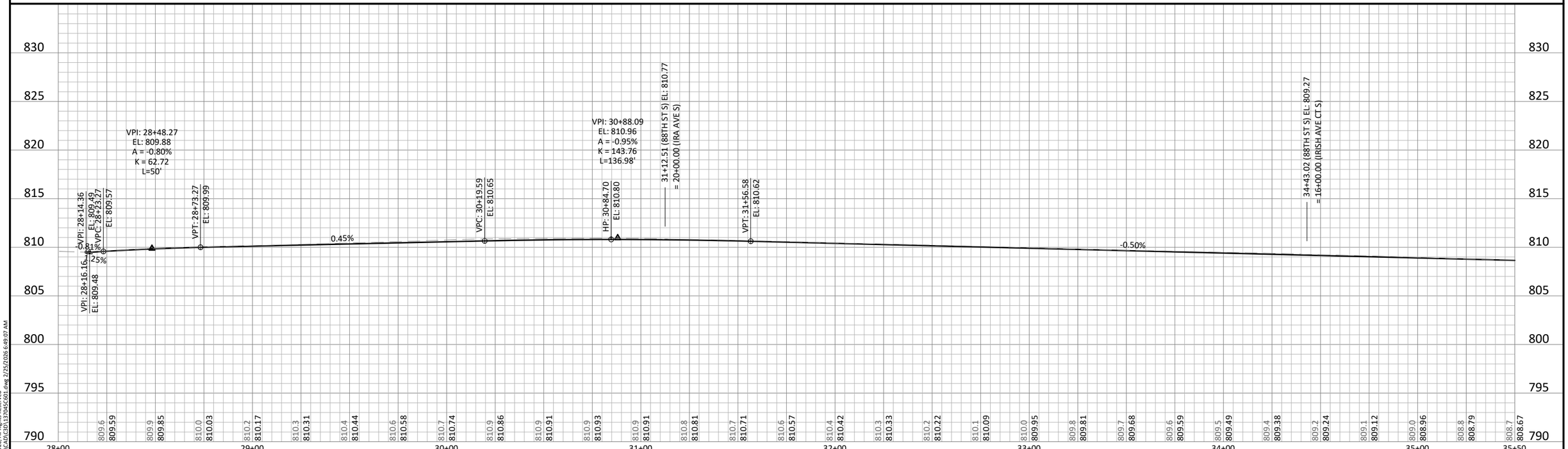


© Bolton & Menk, Inc. 2026. All Rights Reserved
H:\COTT\24X\137045000\CAD\C3D\137045C601.dwg 2/25/2026 6:49:07 AM

HORZ. SCALE 0 25 50 FEET
VERT. SCALE 0 5 10 FEET

I HEREBY CERTIFY THAT THIS PLAN, SPECIFICATION, OR REPORT WAS PREPARED BY ME OR UNDER MY DIRECT SUPERVISION AND THAT I AM A DULY LICENSED PROFESSIONAL ENGINEER UNDER THE LAWS OF THE STATE OF MINNESOTA.

MICHAEL J BOEX
LIC. NO. 44576 DATE MM/DD/YYYY

BOLTON & MENK
3507 HIGH POINT DRIVE NORTH
BLDG. 1 - SUITE E130
OAKDALE, MN 55128
Phone: (651) 704-9970
Email: Oakdale@bolton-menk.com
www.bolton-menk.com

Cottage Grove
Where Pride and Prosperity Meet

| | |
|---|---|
| DESIGNED | ANO |
| DRAWN | BNM |
| CHECKED | MJB |
| CLIENT PROJ. NO. | 137045 |

| NO. | ISSUED FOR | DATE |
|---|---|---|
| | | |

CITY OF COTTAGE GROVE
2026 PAVEMENT MANAGEMENT PROJECT
STREET IMPROVEMENTS
88TH STREET

SHEET C6.05

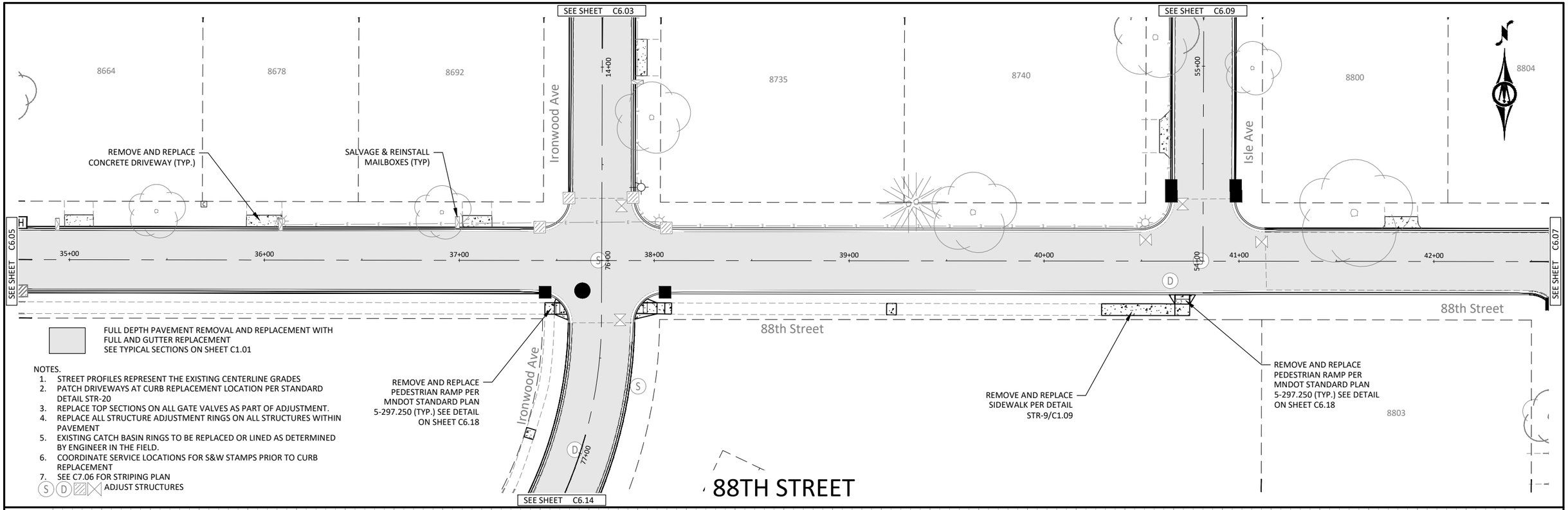


FULL DEPTH PAVEMENT REMOVAL AND REPLACEMENT WITH FULL AND GUTTER REPLACEMENT
SEE TYPICAL SECTIONS ON SHEET C1.01

NOTES.

1. STREET PROFILES REPRESENT THE EXISTING CENTERLINE GRADES
2. PATCH DRIVEWAYS AT CURB REPLACEMENT LOCATION PER STANDARD DETAIL STR-20
3. REPLACE TOP SECTIONS ON ALL GATE VALVES AS PART OF ADJUSTMENT.
4. REPLACE ALL STRUCTURE ADJUSTMENT RINGS ON ALL STRUCTURES WITHIN PAVEMENT
5. EXISTING CATCH BASIN RINGS TO BE REPLACED OR LINED AS DETERMINED BY ENGINEER IN THE FIELD.
6. COORDINATE SERVICE LOCATIONS FOR S&W STAMPS PRIOR TO CURB REPLACEMENT
7. SEE C7.06 FOR STRIPING PLAN

(S) (D) ADJUST STRUCTURES

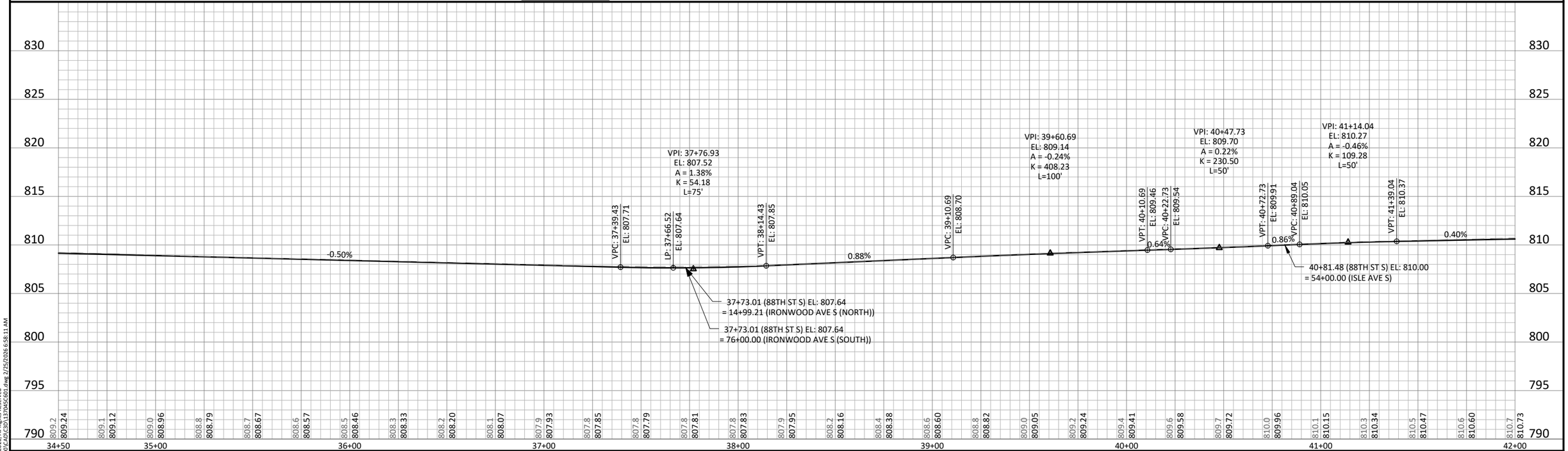


©Bolton & Menk, Inc. 2026. All Rights Reserved
H:\COTT\24X\137045000\CAD\C3D\137045C601.dwg 2/25/2026 6:58:11 AM

HORZ. 0 25 50 SCALE FEET
VERT. 0 5 10 SCALE FEET

I HEREBY CERTIFY THAT THIS PLAN, SPECIFICATION, OR REPORT WAS PREPARED BY ME OR UNDER MY DIRECT SUPERVISION AND THAT I AM A DULY LICENSED PROFESSIONAL ENGINEER UNDER THE LAWS OF THE STATE OF MINNESOTA.

MICHAEL J BOEX
LIC. NO. 44576 DATE MM/DD/YYYY

BOLTON & MENK
3507 HIGH POINT DRIVE NORTH
BLDG. 1 - SUITE E130
OAKDALE, MN 55128
Phone: (651) 704-9970
Email: Oakdale@bolton-menk.com
www.bolton-menk.com

Cottage Grove
Where Pride and Prosperity Meet

| | |
|---|---|
| DESIGNED | ANO |
| DRAWN | BNM |
| CHECKED | MJB |
| CLIENT PROJ. NO. | 137045 |

| NO. | ISSUED FOR | DATE |
|---|---|---|

CITY OF COTTAGE GROVE
2026 PAVEMENT MANAGEMENT PROJECT
STREET IMPROVEMENTS
88TH STREET

SHEET C6.06

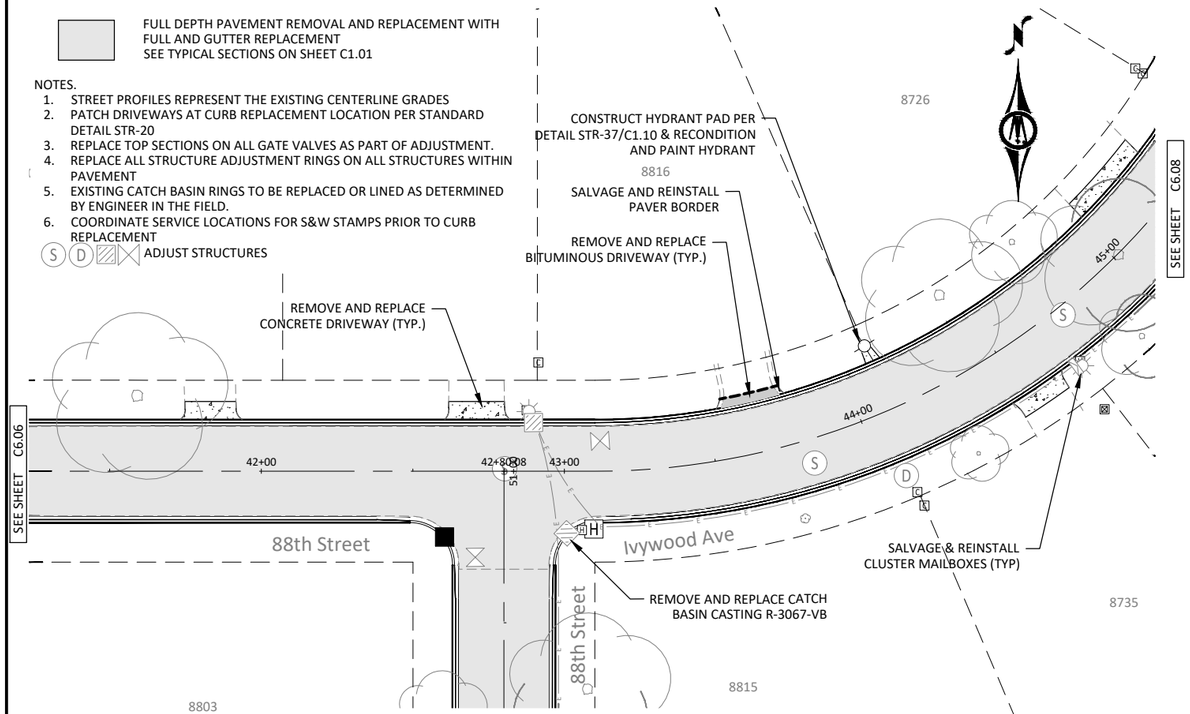


# 88TH STREET & IVYWOOD AVE

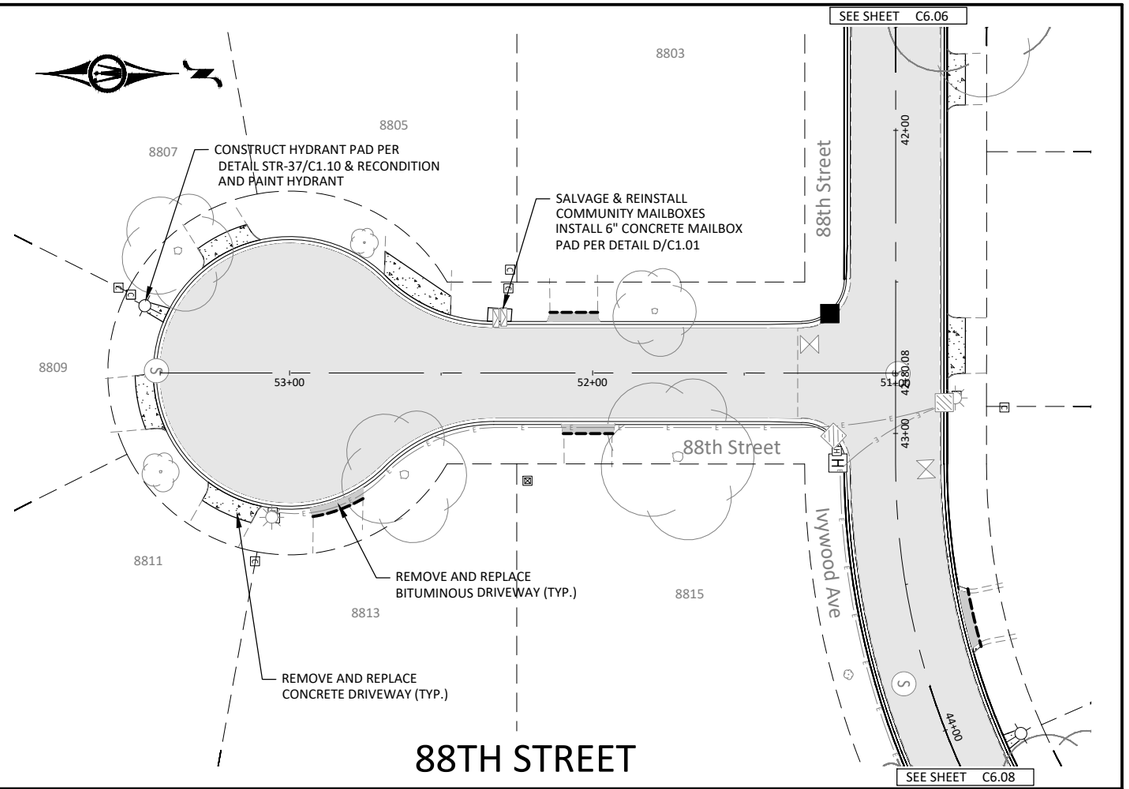


# 88TH STREET

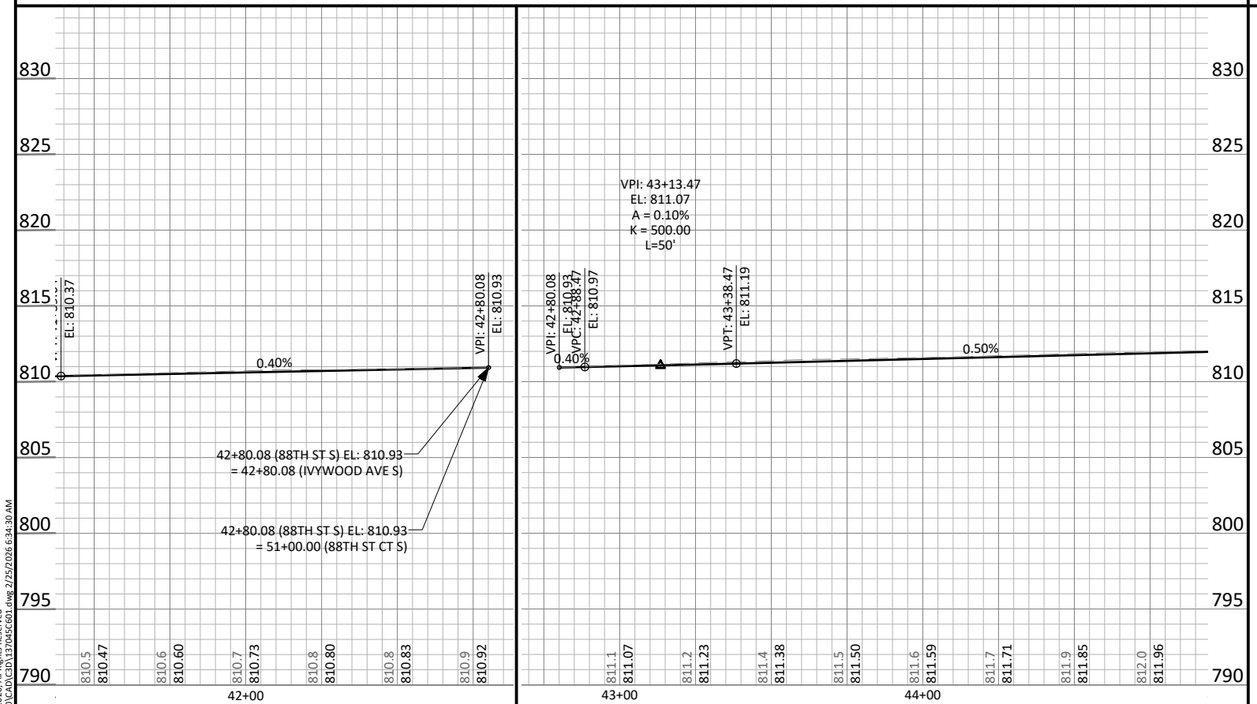


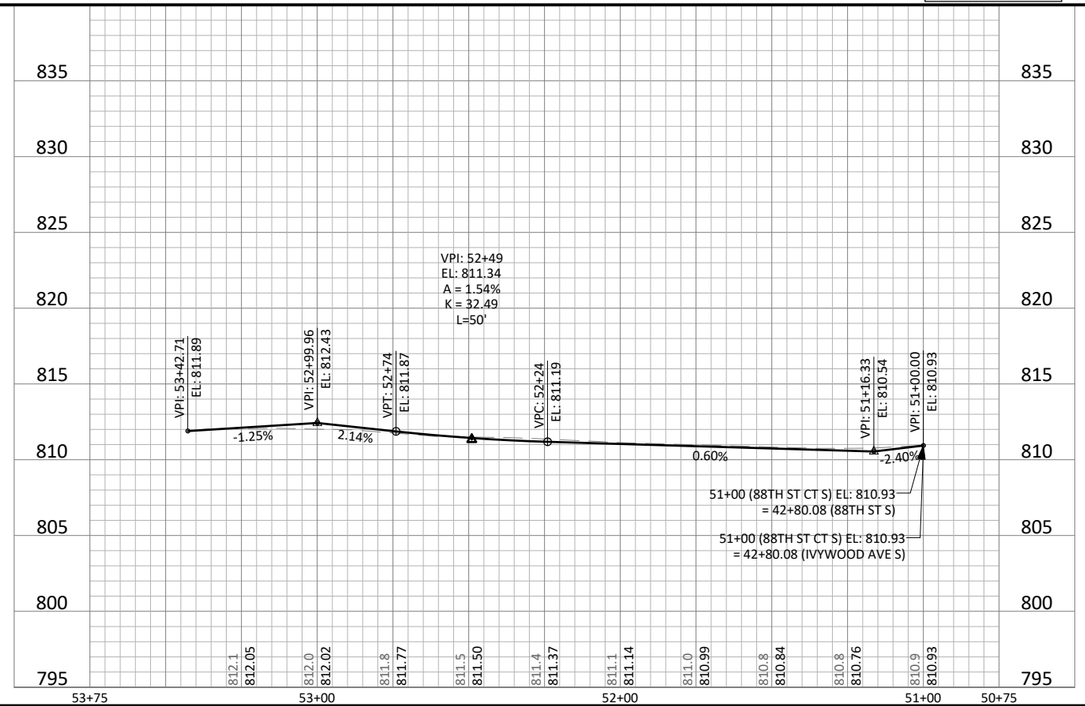


©Bolton & Menk, Inc. 2026. All Rights Reserved
H:\COTT\24X\137045000\CAD\CDS\137045C601.dwg 2/25/2026 6:34:30 AM

HORZ. 0 25 50 SCALE FEET
VERT. 0 5 10 SCALE FEET

I HEREBY CERTIFY THAT THIS PLAN, SPECIFICATION, OR REPORT WAS PREPARED BY ME OR UNDER MY DIRECT SUPERVISION AND THAT I AM A DULY LICENSED PROFESSIONAL ENGINEER UNDER THE LAWS OF THE STATE OF MINNESOTA.
MICHAEL J BOEX
LIC. NO. 44576 DATE MM/DD/YYYY

BOLTON & MENK
3507 HIGH POINT DRIVE NORTH
BLDG. 1 - SUITE E130
OAKDALE, MN 55128
Phone: (651) 704-9970
Email: Oakdale@bolton-menk.com
www.bolton-menk.com

Cottage Grove
Where Pride and Prosperity Meet

| DESIGNED | NO. | ISSUED FOR | DATE |
|---|---|---|---|
| ANO | | | |
| DRAWN | | | |
| BNM | | | |
| CHECKED | | | |
| MJB | | | |
| CLIENT PROJ. NO. | | | |
| 137045 | | | |

CITY OF COTTAGE GROVE
2026 PAVEMENT MANAGEMENT PROJECT
STREET IMPROVEMENTS
IVYWOOD AVENUE & 88TH STREET CDS

SHEET C6.07

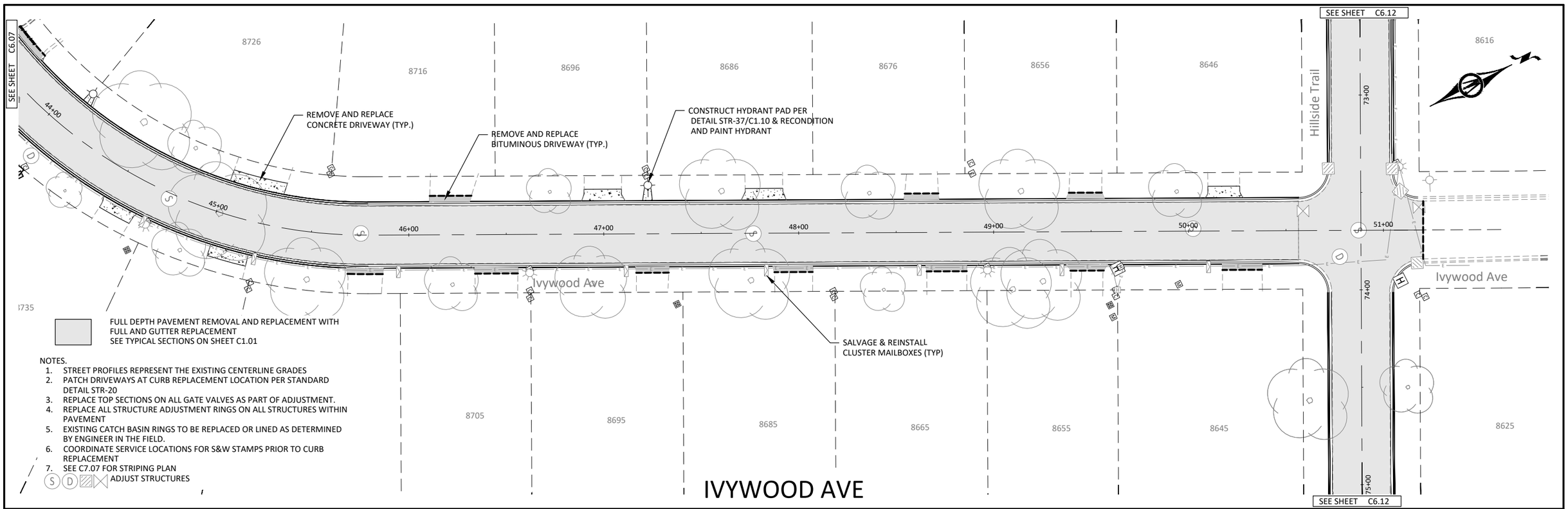


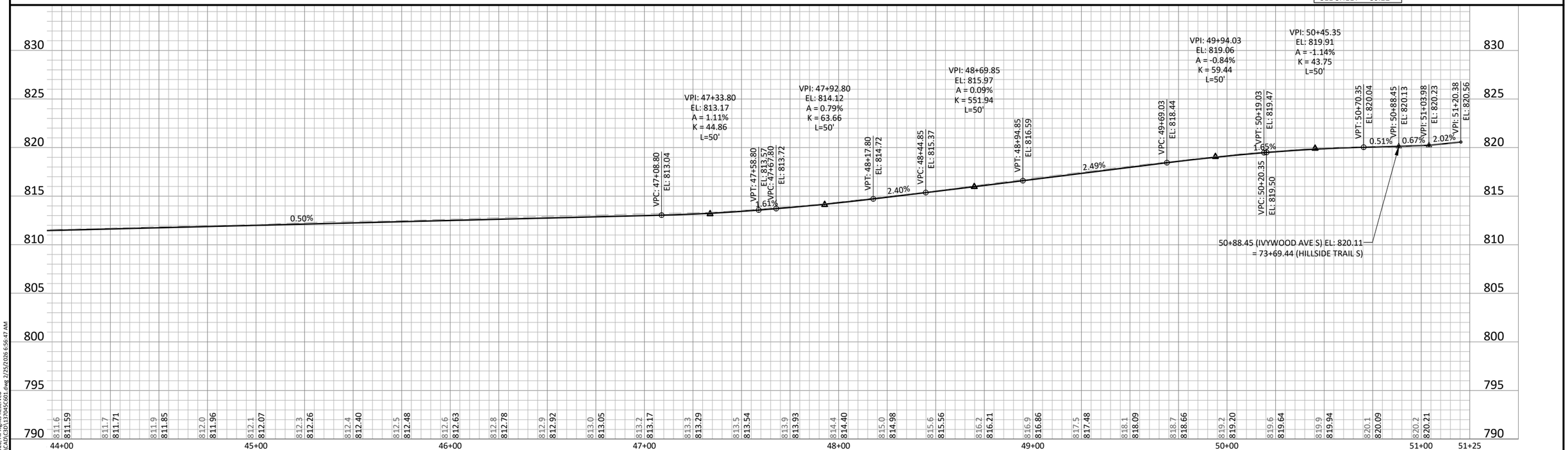


HORZ. SCALE 0 25 50 FEET
VERT. SCALE 0 5 10 FEET

I HEREBY CERTIFY THAT THIS PLAN, SPECIFICATION, OR REPORT WAS PREPARED BY ME OR UNDER MY DIRECT SUPERVISION AND THAT I AM A DULY LICENSED PROFESSIONAL ENGINEER UNDER THE LAWS OF THE STATE OF MINNESOTA.
MICHAEL J BOEX
LIC. NO. 44576 DATE MM/DD/YYYY

BOLTON & MENK
3507 HIGH POINT DRIVE NORTH
BLDG. 1 - SUITE E130
OAKDALE, MN 55128
Phone: (651) 704-9970
Email: Oakdale@bolton-menk.com
www.bolton-menk.com

Cottage Grove
Where Pride and Prosperity Meet

| DESIGNED | ANO |
|---|---|
| DRAWN | BNM |
| CHECKED | MJB |
| CLIENT PROJ. NO. | 137045 |

| NO. | ISSUED FOR | DATE |
|---|---|---|

CITY OF COTTAGE GROVE
2026 PAVEMENT MANAGEMENT PROJECT
STREET IMPROVEMENTS
IVYWOOD AVENUE

SHEET C6.08

©Bolton & Menk, Inc. 2026. All Rights Reserved
H:\CITY\24X1370450000\CAD\C3D\137045C601.dwg 2/25/2026 6:56:47 AM

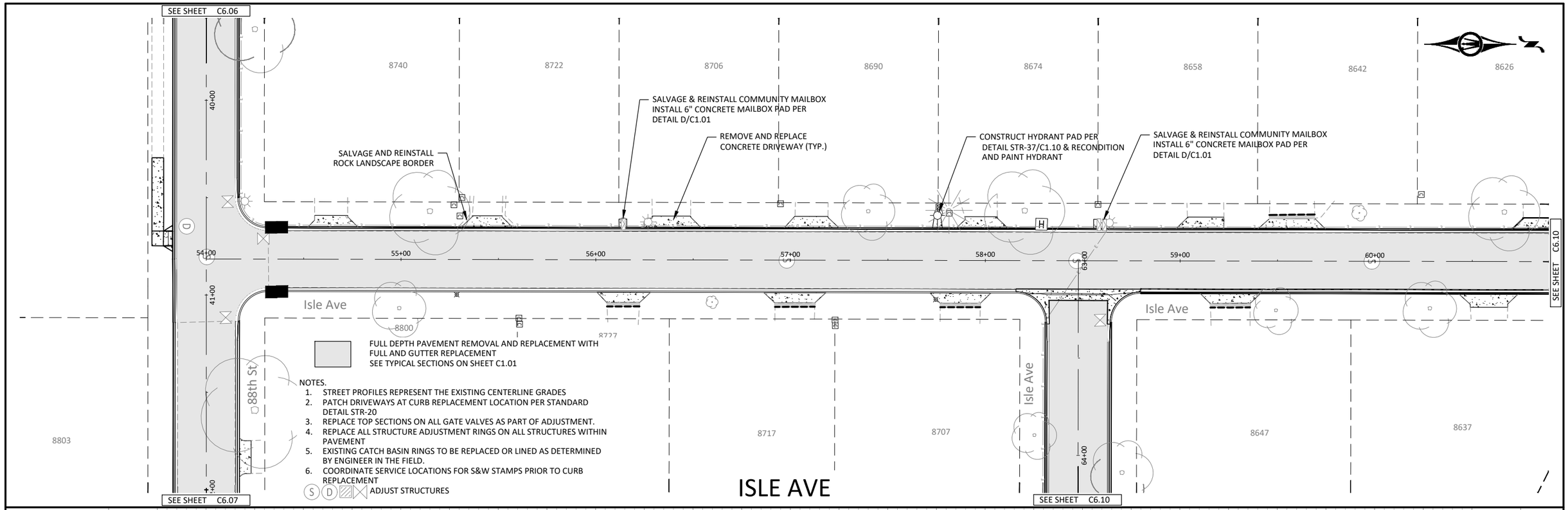


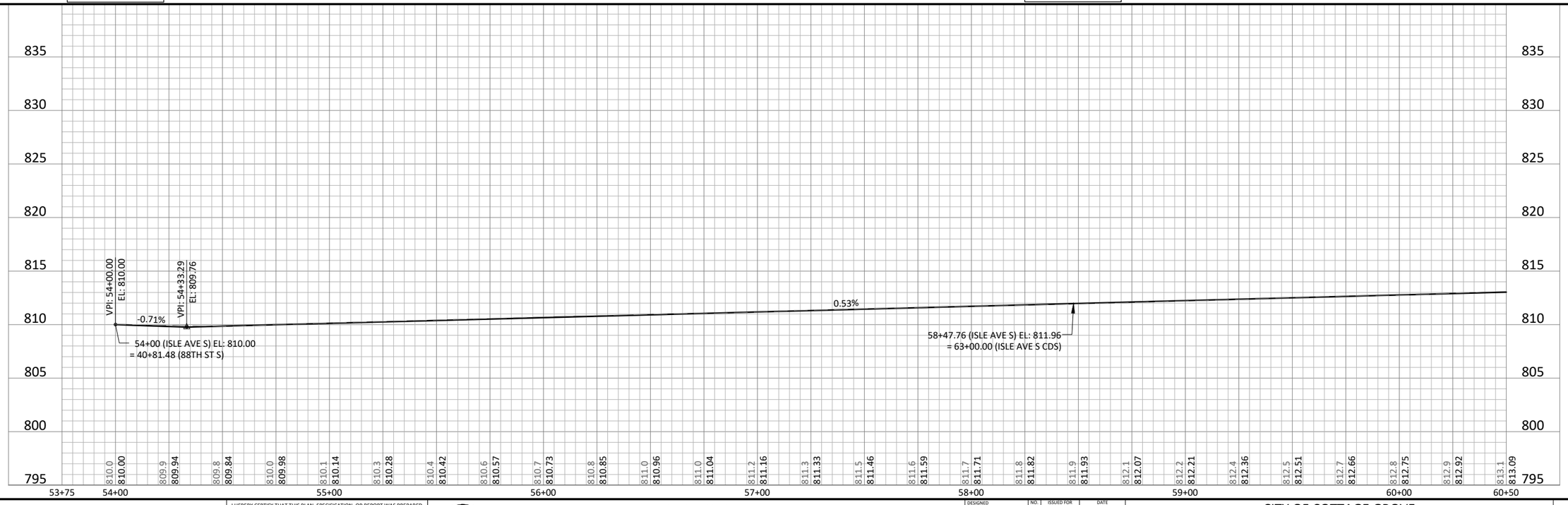


HORZ. 0 25 50 SCALE FEET

VERT. 0 5 10 SCALE FEET

I HEREBY CERTIFY THAT THIS PLAN, SPECIFICATION, OR REPORT WAS PREPARED BY ME OR UNDER MY DIRECT SUPERVISION AND THAT I AM A DULY LICENSED PROFESSIONAL ENGINEER UNDER THE LAWS OF THE STATE OF MINNESOTA.

MICHAEL J BOEX
LIC. NO. 44576 DATE MM/DD/YYYY

BOLTON & MENK
3507 HIGH POINT DRIVE NORTH
BLDG. 1 - SUITE E130
OAKDALE, MN 55128
Phone: (651) 704-9970
Email: Oakdale@bolton-menk.com
www.bolton-menk.com

Cottage Grove
Where Pride and Prosperity Meet

| | |
|---|---|
| DESIGNED | ANO |
| DRAWN | BNM |
| CHECKED | MJB |
| CLIENT PROJ. NO. | 137045 |

| NO. | ISSUED FOR | DATE |
|---|---|---|
| | | |

CITY OF COTTAGE GROVE
2026 PAVEMENT MANAGEMENT PROJECT
STREET IMPROVEMENTS
ISLE AVENUE

SHEET C6.09

©Bolton & Menk, Inc. 2026. All Rights Reserved
H:\COTT\24x36\137045000\CAD\C3D\137045C601.dwg 2/25/2026 6:44:08 AM

FULL DEPTH PAVEMENT REMOVAL AND REPLACEMENT WITH FULL AND GUTTER REPLACEMENT
SEE TYPICAL SECTIONS ON SHEET C1.01

NOTES.
1. STREET PROFILES REPRESENT THE EXISTING CENTERLINE GRADES
2. PATCH DRIVEWAYS AT CURB REPLACEMENT LOCATION PER STANDARD DETAIL STR-20
3. REPLACE TOP SECTIONS ON ALL GATE VALVES AS PART OF ADJUSTMENT.
4. REPLACE ALL STRUCTURE ADJUSTMENT RINGS ON ALL STRUCTURES WITHIN PAVEMENT
5. EXISTING CATCH BASIN RINGS TO BE REPLACED OR LINED AS DETERMINED BY ENGINEER IN THE FIELD.
6. COORDINATE SERVICE LOCATIONS FOR S&W STAMPS PRIOR TO CURB REPLACEMENT
7. SEE C7.07 FOR STRIPING PLAN

(S) (D) ADJUST STRUCTURES

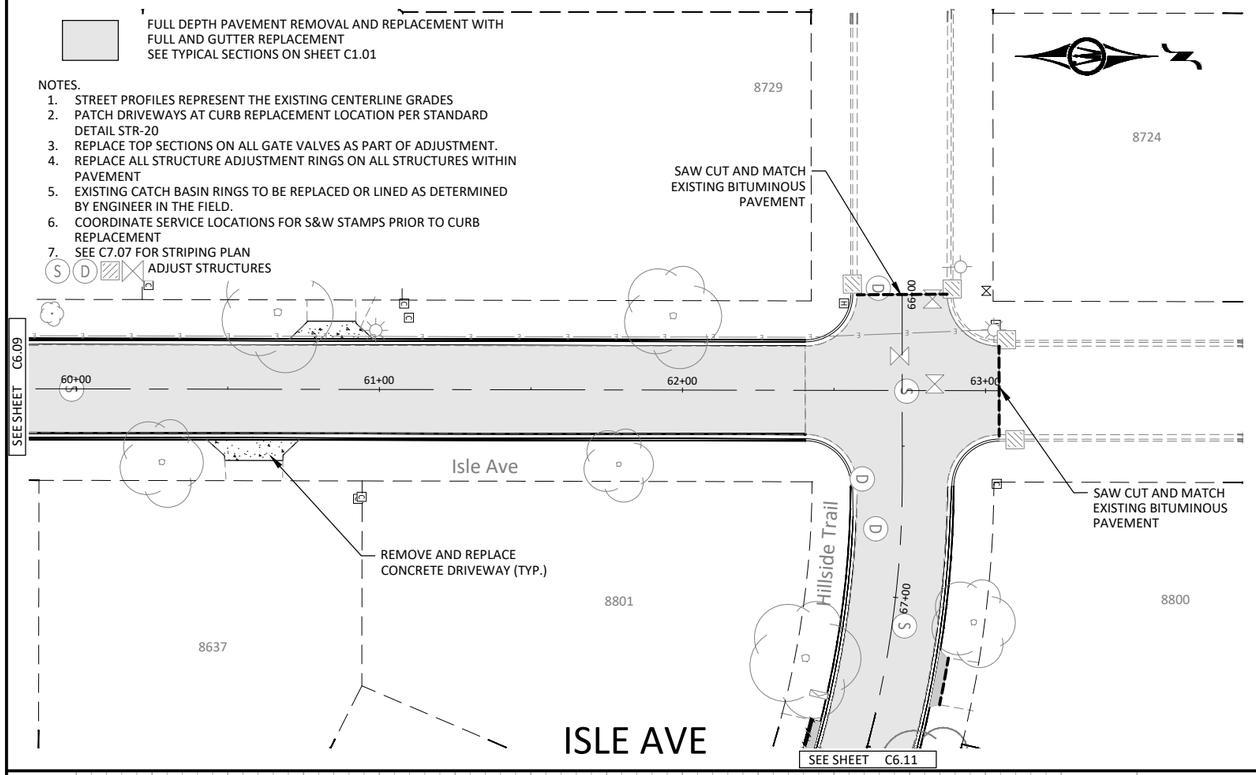


ISLE AVE

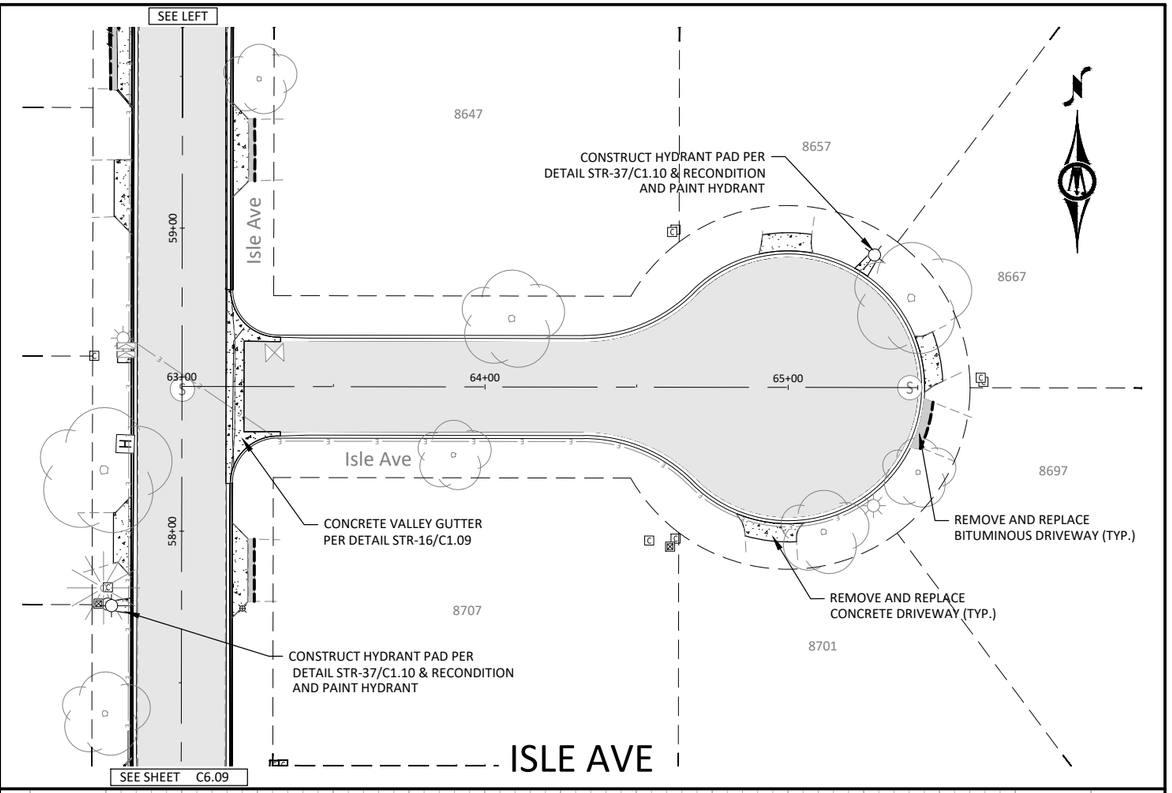


ISLE AVE

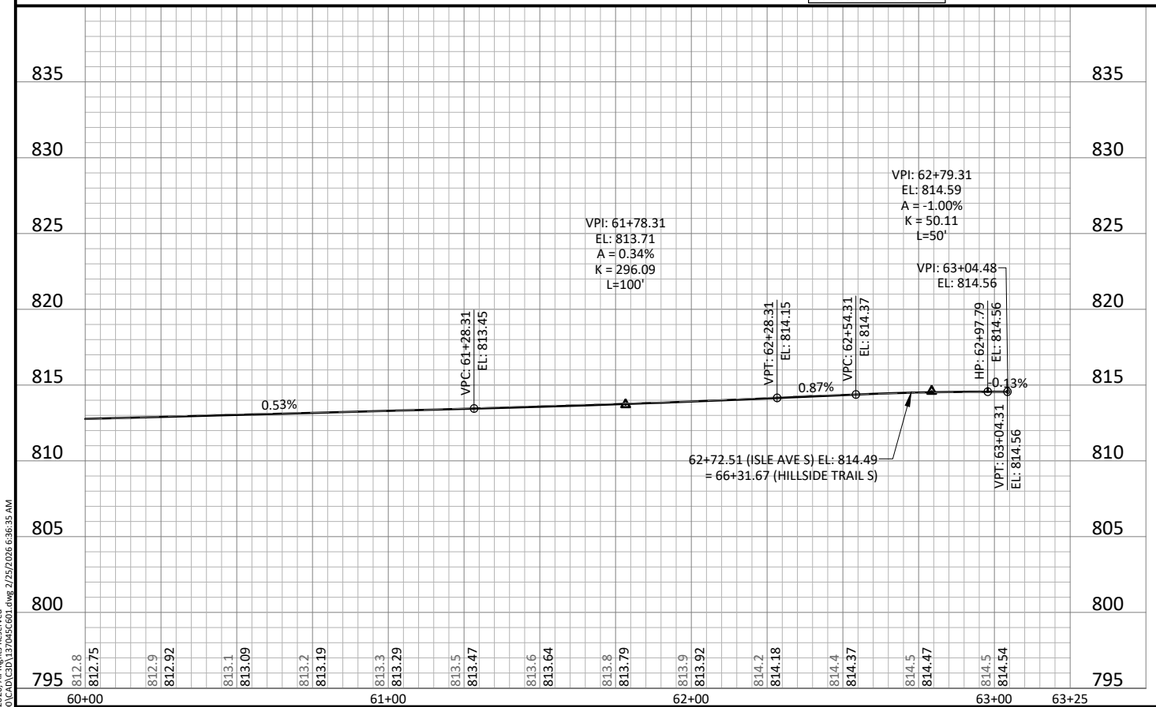


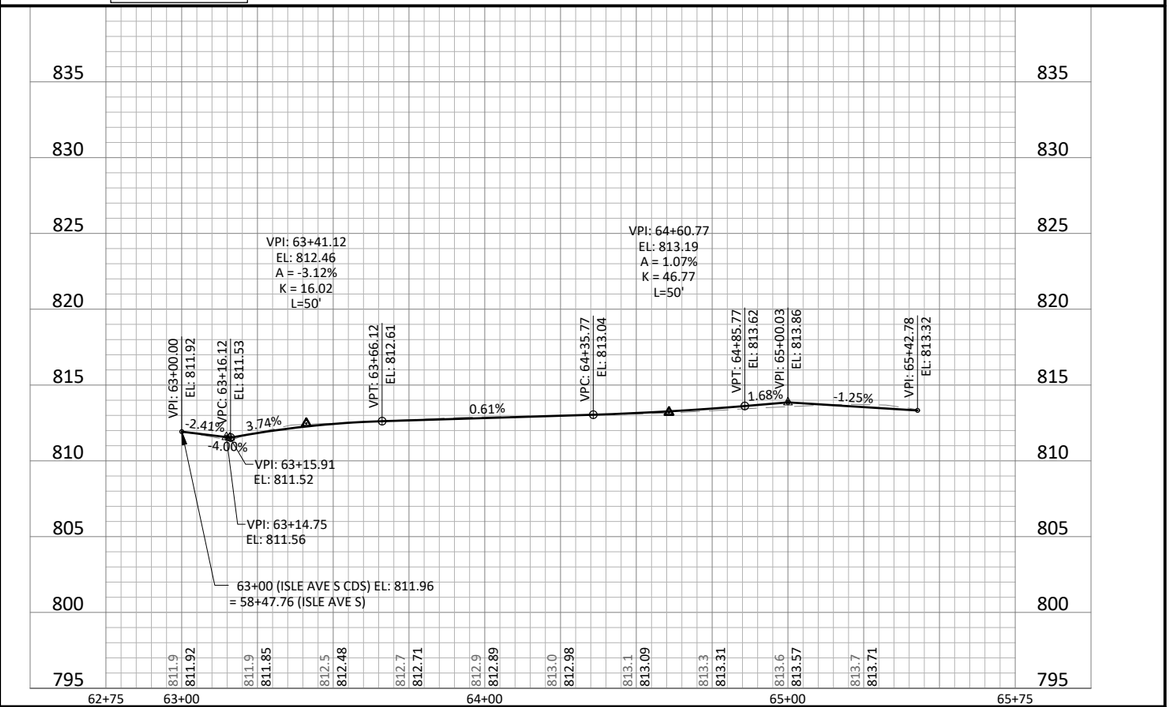


HORZ. 0 25 50 SCALE FEET
VERT. 0 5 10 SCALE FEET

I HEREBY CERTIFY THAT THIS PLAN, SPECIFICATION, OR REPORT WAS PREPARED BY ME OR UNDER MY DIRECT SUPERVISION AND THAT I AM A DULY LICENSED PROFESSIONAL ENGINEER UNDER THE LAWS OF THE STATE OF MINNESOTA.
MICHAEL J BOEX
LIC. NO. 44576 DATE MM/DD/YYYY


BOLTON & MENK
3507 HIGH POINT DRIVE NORTH
BLDG. 1 - SUITE E130
OAKDALE, MN 55128
Phone: (651) 704-9970
Email: Oakdale@bolton-menk.com
www.bolton-menk.com


Cottage Grove
Where Pride and Prosperity Meet

| DESIGNED | ANO |
|---|---|
| DRAWN | BNM |
| CHECKED | MJB |
| CLIENT PROJ. NO. | 137045 |

| NO. | ISSUED FOR | DATE |
|---|---|---|
| | | |

CITY OF COTTAGE GROVE
2026 PAVEMENT MANAGEMENT PROJECT
STREET IMPROVEMENTS
ISLE AVENUE

SHEET C6.10


©Bolton & Menk, Inc. 2026. All Rights Reserved
H:\COTT\24X\137045000\CAD\C3D\137045C601.dwg 2/25/2026 6:36:35 AM

FULL DEPTH PAVEMENT REMOVAL AND REPLACEMENT WITH FULL AND GUTTER REPLACEMENT
SEE TYPICAL SECTIONS ON SHEET C1.01

NOTES.
1. STREET PROFILES REPRESENT THE EXISTING CENTERLINE GRADES
2. PATCH DRIVEWAYS AT CURB REPLACEMENT LOCATION PER STANDARD DETAIL STR-20
3. REPLACE TOP SECTIONS ON ALL GATE VALVES AS PART OF ADJUSTMENT.
4. REPLACE ALL STRUCTURE ADJUSTMENT RINGS ON ALL STRUCTURES WITHIN PAVEMENT
5. EXISTING CATCH BASIN RINGS TO BE REPLACED OR LINED AS DETERMINED BY ENGINEER IN THE FIELD.
6. COORDINATE SERVICE LOCATIONS FOR S&W STAMPS PRIOR TO CURB REPLACEMENT
7. SEE C7.07 FOR STRIPING PLAN

(S) (D) ADJUST STRUCTURES

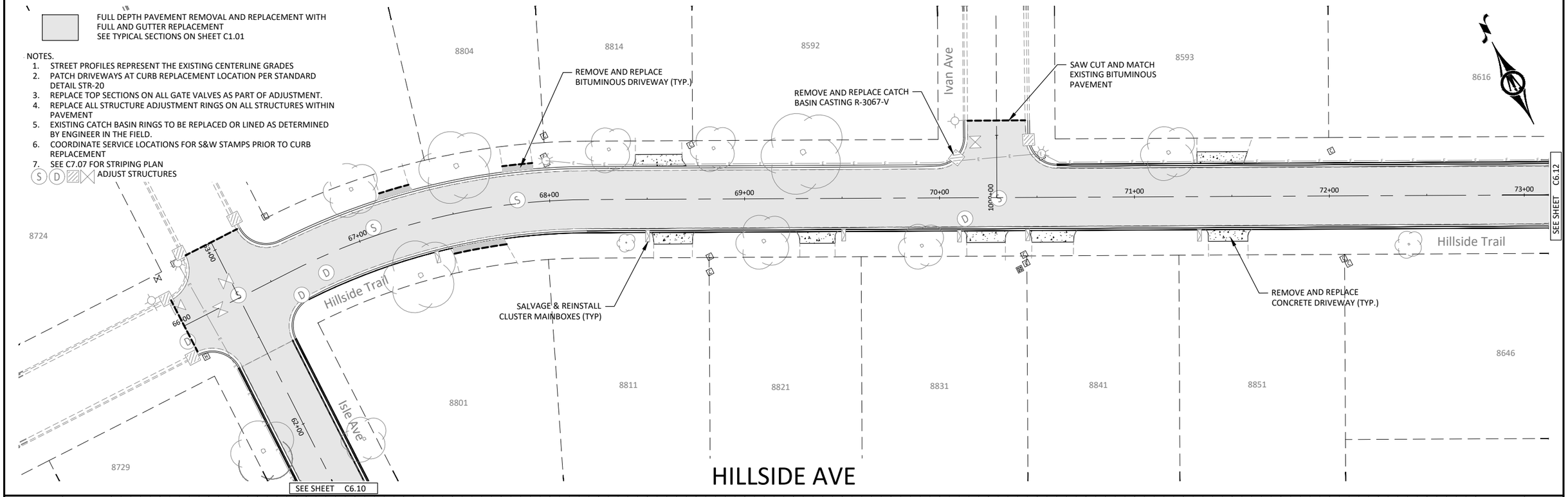


# HILLSIDE AVE

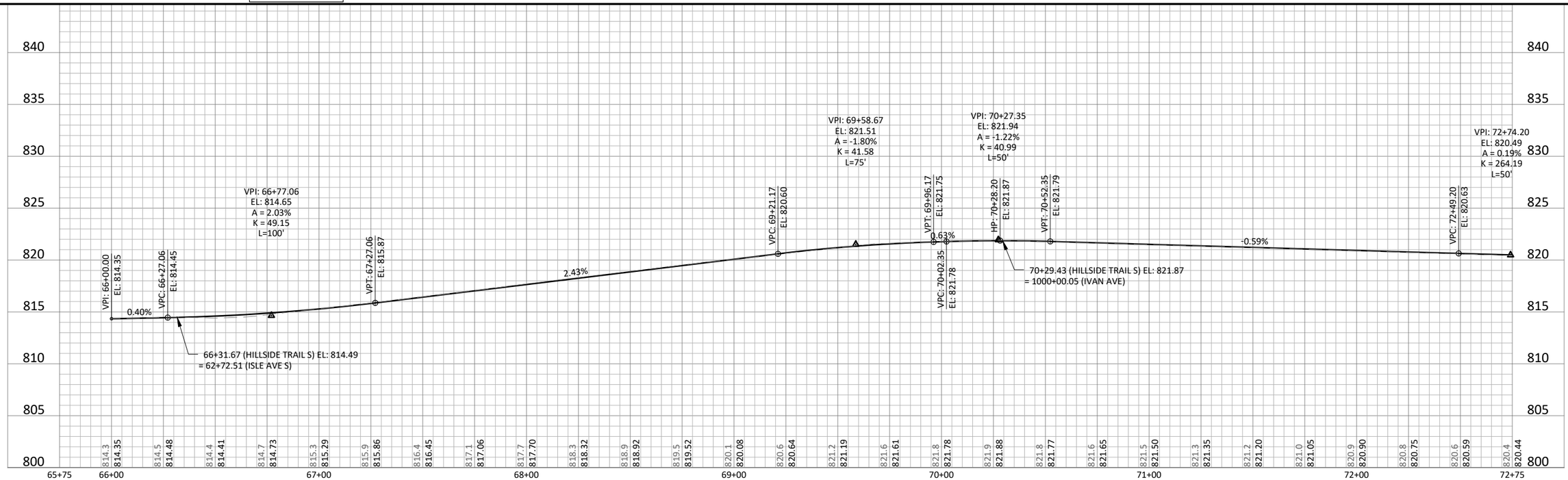


HORZ. SCALE 0 25 50 FEET
VERT. SCALE 0 5 10 FEET

I HEREBY CERTIFY THAT THIS PLAN, SPECIFICATION, OR REPORT WAS PREPARED BY ME OR UNDER MY DIRECT SUPERVISION AND THAT I AM A DULY LICENSED PROFESSIONAL ENGINEER UNDER THE LAWS OF THE STATE OF MINNESOTA.

MICHAEL J BOEX
LIC. NO. 44576 DATE MM/DD/YYYY


BOLTON & MENK
3507 HIGH POINT DRIVE NORTH
BLDG. 1 - SUITE E130
OAKDALE, MN 55128
Phone: (651) 704-9970
Email: Oakdale@bolton-menk.com
www.bolton-menk.com


Cottage Grove
Where Pride and Prosperity Meet

| | |
|---|---|
| DESIGNED | ANO |
| DRAWN | BNM |
| CHECKED | MJB |
| CLIENT PROJ. NO. | 137045 |

| NO. | ISSUED FOR | DATE |
|---|---|---|
| | | |

CITY OF COTTAGE GROVE
2026 PAVEMENT MANAGEMENT PROJECT
STREET IMPROVEMENTS
HILLSIDE TRAIL

SHEET C6.11


©Bolton & Menk, Inc. 2026. All Rights Reserved

H:\CITY\24X\137045000\CAD\C3D\137045C601.dwg 2/25/2026 6:58:10 AM

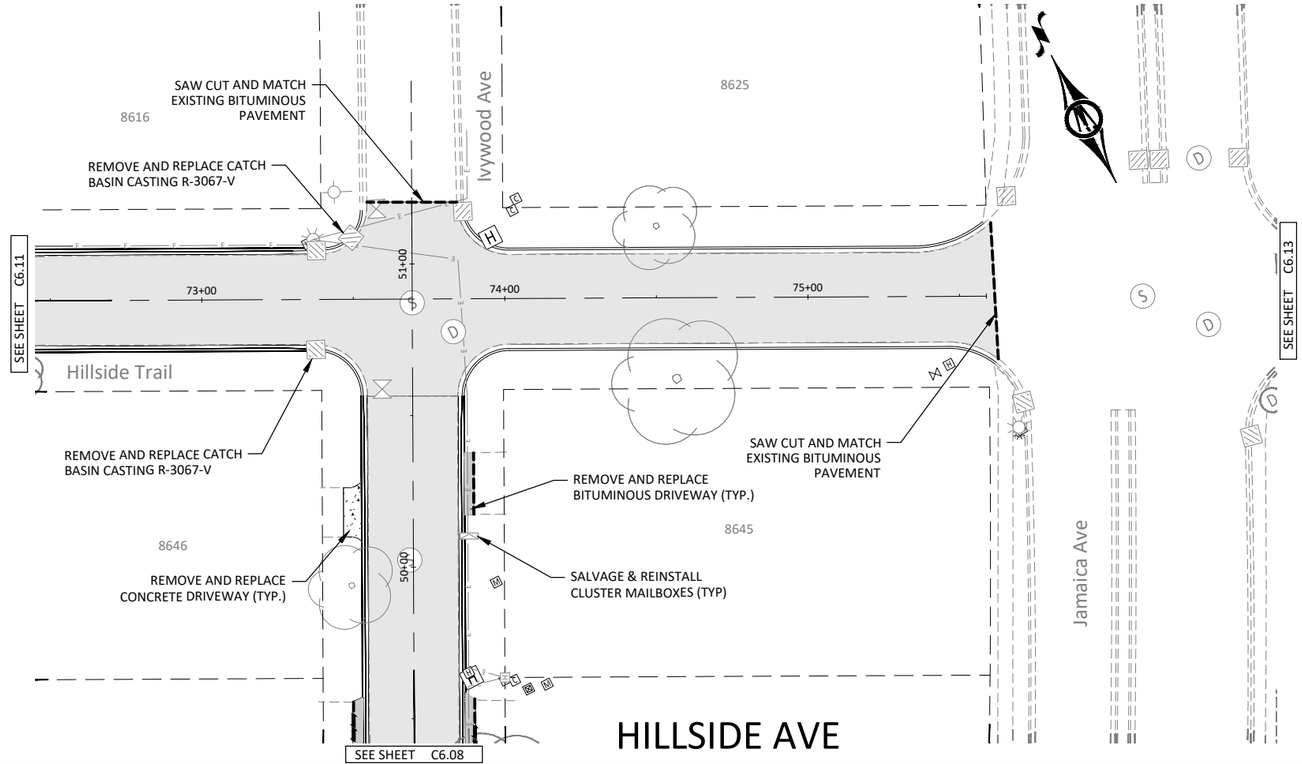


FULL DEPTH PAVEMENT REMOVAL AND REPLACEMENT WITH FULL AND GUTTER REPLACEMENT
SEE TYPICAL SECTIONS ON SHEET C1.01

NOTES.

1. STREET PROFILES REPRESENT THE EXISTING CENTERLINE GRADES
2. PATCH DRIVEWAYS AT CURB REPLACEMENT LOCATION PER STANDARD DETAIL STR-20
3. REPLACE TOP SECTIONS ON ALL GATE VALVES AS PART OF ADJUSTMENT.
4. REPLACE ALL STRUCTURE ADJUSTMENT RINGS ON ALL STRUCTURES WITHIN PAVEMENT
5. EXISTING CATCH BASIN RINGS TO BE REPLACED OR LINED AS DETERMINED BY ENGINEER IN THE FIELD.
6. COORDINATE SERVICE LOCATIONS FOR S&W STAMPS PRIOR TO CURB REPLACEMENT
7. SEE C7.07 FOR STRIPING PLAN

(S) (D) ADJUST STRUCTURES

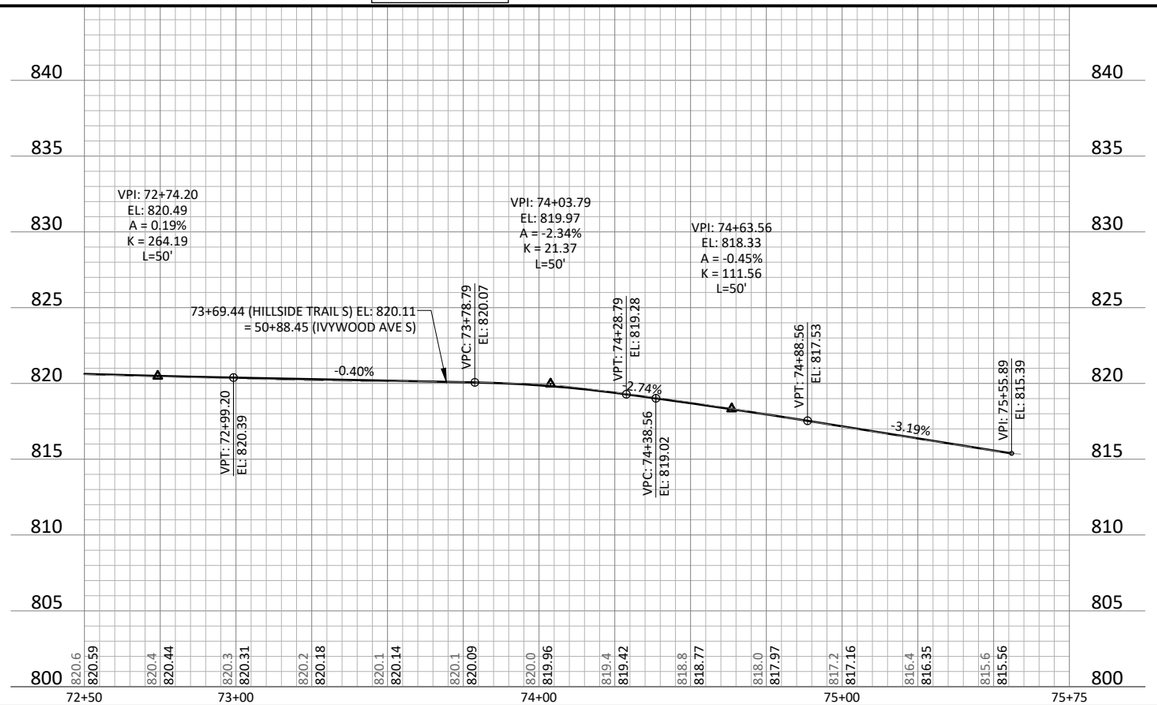


HORZ. SCALE 0 25 50 FEET
VERT. SCALE 0 5 10 FEET

I HEREBY CERTIFY THAT THIS PLAN, SPECIFICATION, OR REPORT WAS PREPARED BY ME OR UNDER MY DIRECT SUPERVISION AND THAT I AM A DULY LICENSED PROFESSIONAL ENGINEER UNDER THE LAWS OF THE STATE OF MINNESOTA.

MICHAEL J BOEX
LIC. NO. 44576 DATE MM/DD/YYYY

BOLTON & MENK

3507 HIGH POINT DRIVE NORTH
BLDG. 1 - SUITE E130
OAKDALE, MN 55128
Phone: (651) 704-9970
Email: Oakdale@bolton-menk.com
www.bolton-menk.com

Cottage Grove
Where Pride and Prosperity Meet

| | |
|---|---|
| DESIGNED | ANO |
| DRAWN | BNM |
| CHECKED | MJB |
| CLIENT PROJ. NO. | 137045 |

| NO. | ISSUED FOR | DATE |
|---|---|---|
| | | |

CITY OF COTTAGE GROVE
2026 PAVEMENT MANAGEMENT PROJECT
STREET IMPROVEMENTS
HILLSIDE TRAIL

SHEET C6.12

©Bolton & Menk, Inc. 2026. All Rights Reserved
H:\CO\T\24X\137045001\CAD\C3D\137045C601.dwg 2/25/2026 6:55:28 AM

SEE SHEET C6.12

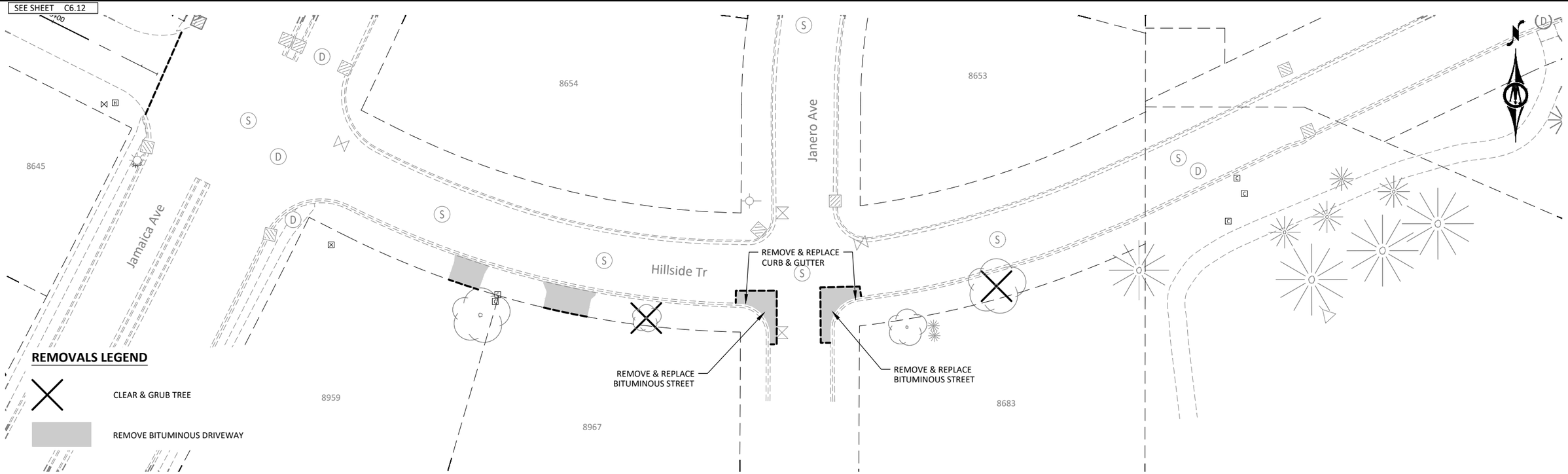


SEE SHEET C6.12

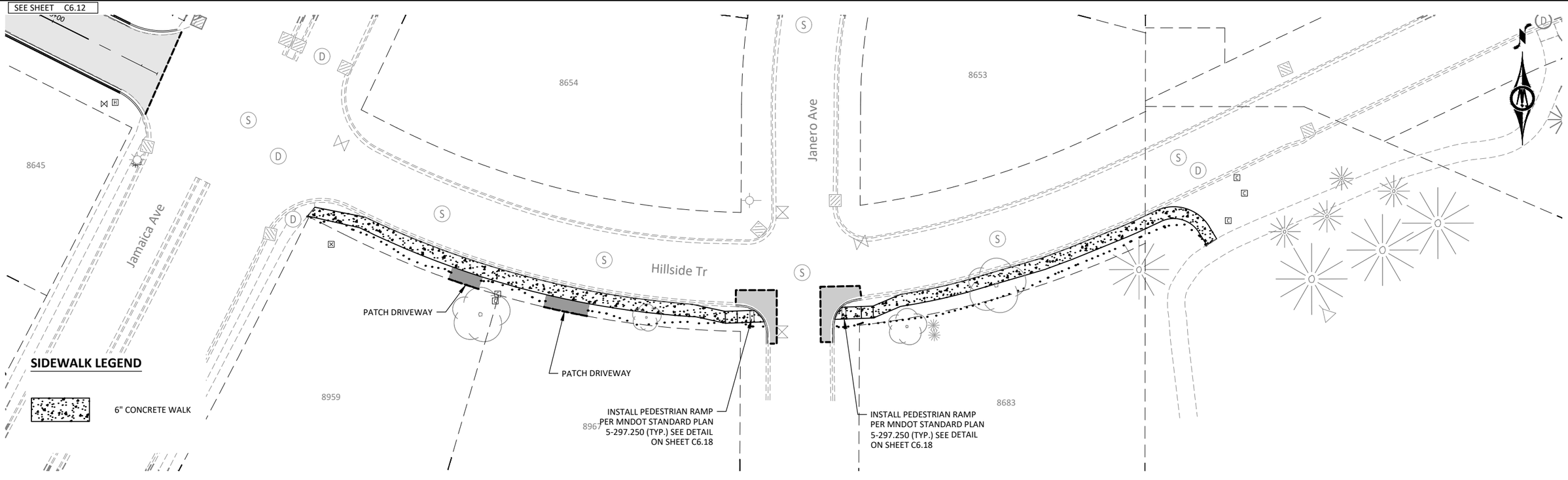


©Bolton & Menk, Inc. 2026. All Rights Reserved
H:\CITY\24x137045001\CAD\C3D\137045C601.dwg 2/25/2026 6:55:27 AM

HORZ. SCALE 0 25 50 FEET

I HEREBY CERTIFY THAT THIS PLAN, SPECIFICATION, OR REPORT WAS PREPARED BY ME OR UNDER MY DIRECT SUPERVISION AND THAT I AM A DULY LICENSED PROFESSIONAL ENGINEER UNDER THE LAWS OF THE STATE OF MINNESOTA.

MICHAEL J BOEX
LIC. NO. 44576 DATE MM/DD/YYYY

BOLTON & MENK
3507 HIGH POINT DRIVE NORTH
BLDG. 1 - SUITE E130
OAKDALE, MN 55128
Phone: (651) 704-9970
Email: Oakdale@bolton-menk.com
www.bolton-menk.com

Cottage Grove
Where Pride and Prosperity Meet

| DESIGNED | ANO |
|---|---|
| DRAWN | BNM |
| CHECKED | MJB |
| CLIENT PROJ. NO. | 137045 |

| NO. | ISSUED FOR | DATE |
|---|---|---|
| | | |

CITY OF COTTAGE GROVE
2026 PAVEMENT MANAGEMENT PROJECT
STREET IMPROVEMENTS
HILLSIDE TRAIL SIDEWALK REMOVALS & IMPROVEMENTS

SHEET C6.13

FULL DEPTH PAVEMENT REMOVAL AND REPLACEMENT WITH FULL AND GUTTER REPLACEMENT
SEE TYPICAL SECTIONS ON SHEET C1.01

NOTES.
1. STREET PROFILES REPRESENT THE EXISTING CENTERLINE GRADES
2. PATCH DRIVEWAYS AT CURB REPLACEMENT LOCATION PER STANDARD DETAIL STR-20
3. REPLACE TOP SECTIONS ON ALL GATE VALVES AS PART OF ADJUSTMENT.
4. REPLACE ALL STRUCTURE ADJUSTMENT RINGS ON ALL STRUCTURES WITHIN PAVEMENT
5. EXISTING CATCH BASIN RINGS TO BE REPLACED OR LINED AS DETERMINED BY ENGINEER IN THE FIELD.
6. COORDINATE SERVICE LOCATIONS FOR S&W STAMPS PRIOR TO CURB REPLACEMENT
7. SEE C7.06 FOR STRIPING PLAN

S D ADJUST STRUCTURES

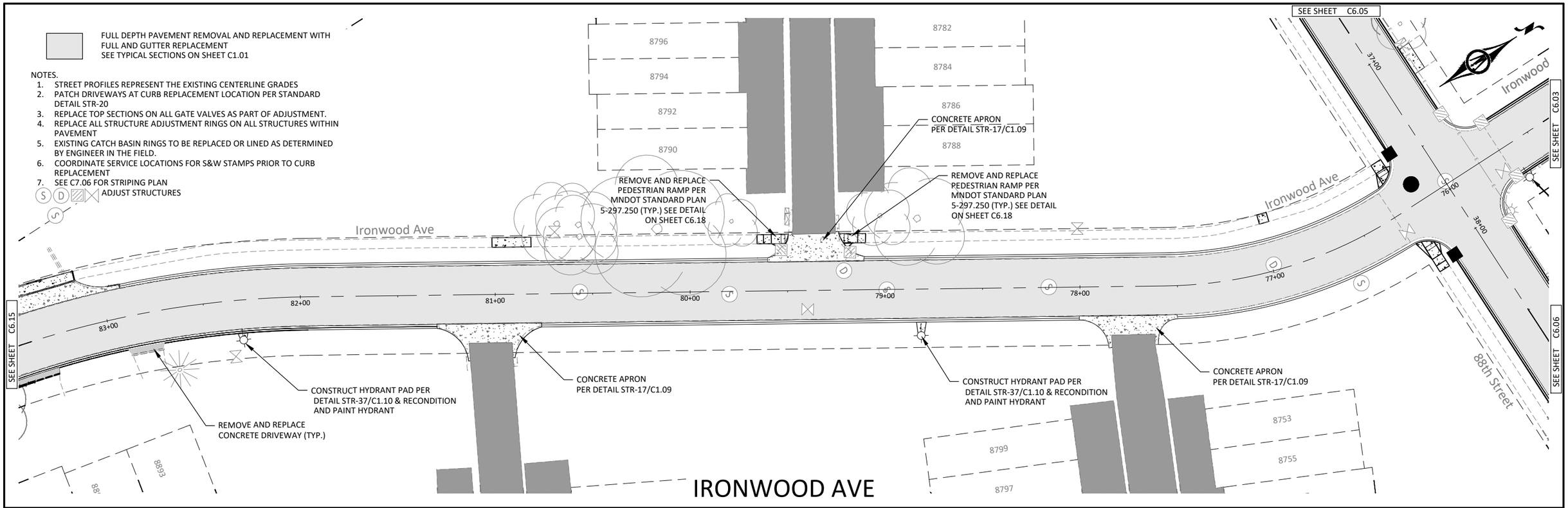


# IRONWOOD AVE

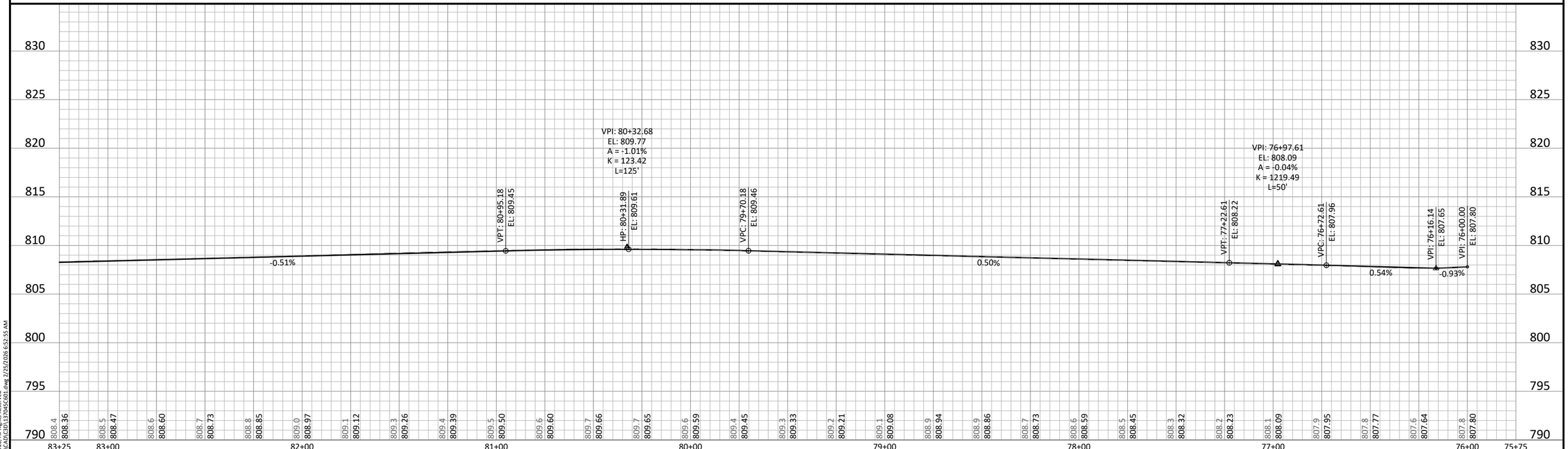


HORZ. 0 25 50 SCALE FEET
VERT. 0 5 10 SCALE FEET

I HEREBY CERTIFY THAT THIS PLAN, SPECIFICATION, OR REPORT WAS PREPARED BY ME OR UNDER MY DIRECT SUPERVISION AND THAT I AM A DULY LICENSED PROFESSIONAL ENGINEER UNDER THE LAWS OF THE STATE OF MINNESOTA.
MICHAEL J BOEX
LIC. NO. 44576 DATE MM/DD/YYYY


BOLTON & MENK
3507 HIGH POINT DRIVE NORTH
BLDG. 1 - SUITE E130
OAKDALE, MN 55128
Phone: (651) 704-9970
Email: Oakdale@bolton-menk.com
www.bolton-menk.com


Cottage Grove
Where Pride and Prosperity Meet

DESIGNED ANO
DRAWN BNM
CHECKED MJB
CLIENT PROJ. NO. 137045

| NO. | ISSUED FOR | DATE |
|---|---|---|

CITY OF COTTAGE GROVE
2026 PAVEMENT MANAGEMENT PROJECT
STREET IMPROVEMENTS
IRONWOOD AVENUE SOUTH

SHEET C6.14


©Bolton & Menk, Inc. 2026. All Rights Reserved
H:\CO\T\24X\137045000\CAD\C3D\137045C601.dwg 2/25/2026 6:52:55 AM

FULL DEPTH PAVEMENT REMOVAL AND REPLACEMENT WITH FULL AND GUTTER REPLACEMENT
SEE TYPICAL SECTIONS ON SHEET C1.01

NOTES.
1. STREET PROFILES REPRESENT THE EXISTING CENTERLINE GRADES
2. PATCH DRIVEWAYS AT CURB REPLACEMENT LOCATION PER STANDARD DETAIL STR-20
3. REPLACE TOP SECTIONS ON ALL GATE VALVES AS PART OF ADJUSTMENT.
4. REPLACE ALL STRUCTURE ADJUSTMENT RINGS ON ALL STRUCTURES WITHIN PAVEMENT
5. EXISTING CATCH BASIN RINGS TO BE REPLACED OR LINED AS DETERMINED BY ENGINEER IN THE FIELD.
6. COORDINATE SERVICE LOCATIONS FOR S&W STAMPS PRIOR TO CURB REPLACEMENT
7. SEE C7.08 FOR STRIPING PLAN

S D ADJUST STRUCTURES

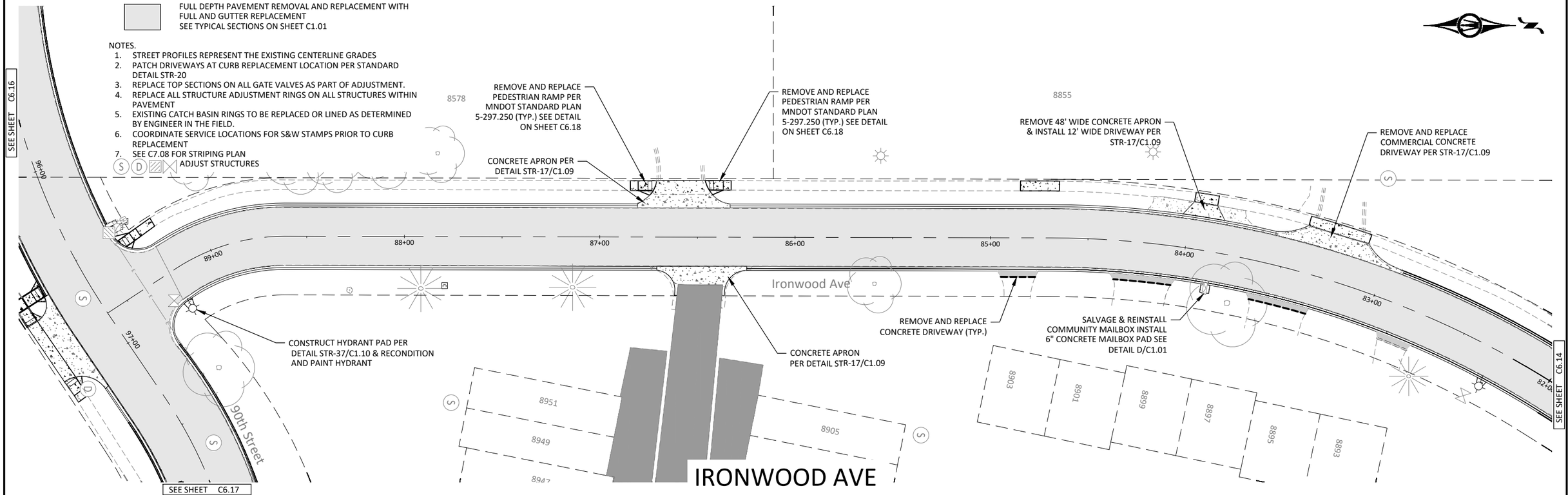


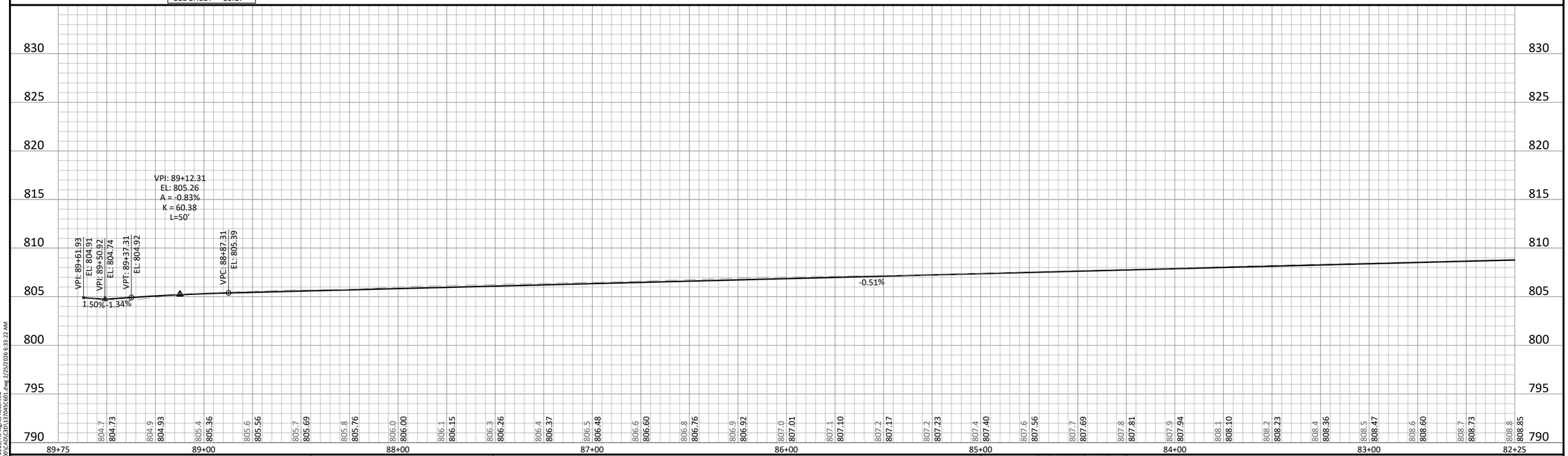


©Bolton & Menk, Inc. 2026. All Rights Reserved
H:\CGTT\124X13704500\CAD\C3D\137045C601.dwg 2/25/2026 6:33:22 AM

HORZ. 0 25 50 SCALE FEET
VERT. 0 5 10 SCALE FEET

I HEREBY CERTIFY THAT THIS PLAN, SPECIFICATION, OR REPORT WAS PREPARED BY ME OR UNDER MY DIRECT SUPERVISION AND THAT I AM A DULY LICENSED PROFESSIONAL ENGINEER UNDER THE LAWS OF THE STATE OF MINNESOTA.
MICHAEL J BOEX
LIC. NO. 44576 DATE MM/DD/YYYY

BOLTON & MENK
3507 HIGH POINT DRIVE NORTH
BLDG. 1 - SUITE E130
OAKDALE, MN 55128
Phone: (651) 704-9970
Email: Oakdale@bolton-menk.com
www.bolton-menk.com

Cottage Grove
Where Pride and Prosperity Meet

| | |
|---|---|
| DESIGNED | ANO |
| DRAWN | BNM |
| CHECKED | MJB |
| CLIENT PROJ. NO. | 137045 |

| NO. | ISSUED FOR | DATE |
|---|---|---|
| | | |

CITY OF COTTAGE GROVE
2026 PAVEMENT MANAGEMENT PROJECT
STREET IMPROVEMENTS
IRONWOOD AVENUE SOUTH

SHEET C6.15

FULL DEPTH PAVEMENT REMOVAL AND REPLACEMENT WITH FULL AND GUTTER REPLACEMENT
SEE TYPICAL SECTIONS ON SHEET C1.01

NOTES.
1. STREET PROFILES REPRESENT THE EXISTING CENTERLINE GRADES
2. PATCH DRIVEWAYS AT CURB REPLACEMENT LOCATION PER STANDARD DETAIL STR-20
3. REPLACE TOP SECTIONS ON ALL GATE VALVES AS PART OF ADJUSTMENT.
4. REPLACE ALL STRUCTURE ADJUSTMENT RINGS ON ALL STRUCTURES WITHIN PAVEMENT
5. EXISTING CATCH BASIN RINGS TO BE REPLACED OR LINED AS DETERMINED BY ENGINEER IN THE FIELD.
6. COORDINATE SERVICE LOCATIONS FOR S&W STAMPS PRIOR TO CURB REPLACEMENT
7. SEE C7.08 FOR STRIPING PLAN

(S) (D) ADJUST STRUCTURES

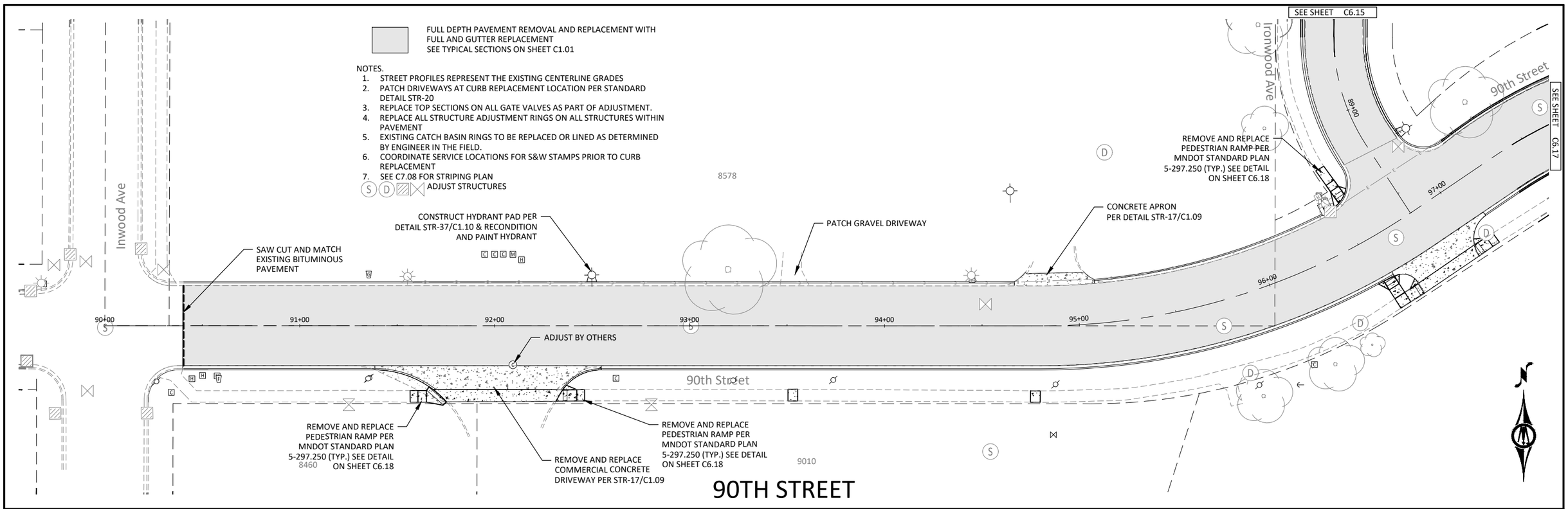


# 90TH STREET

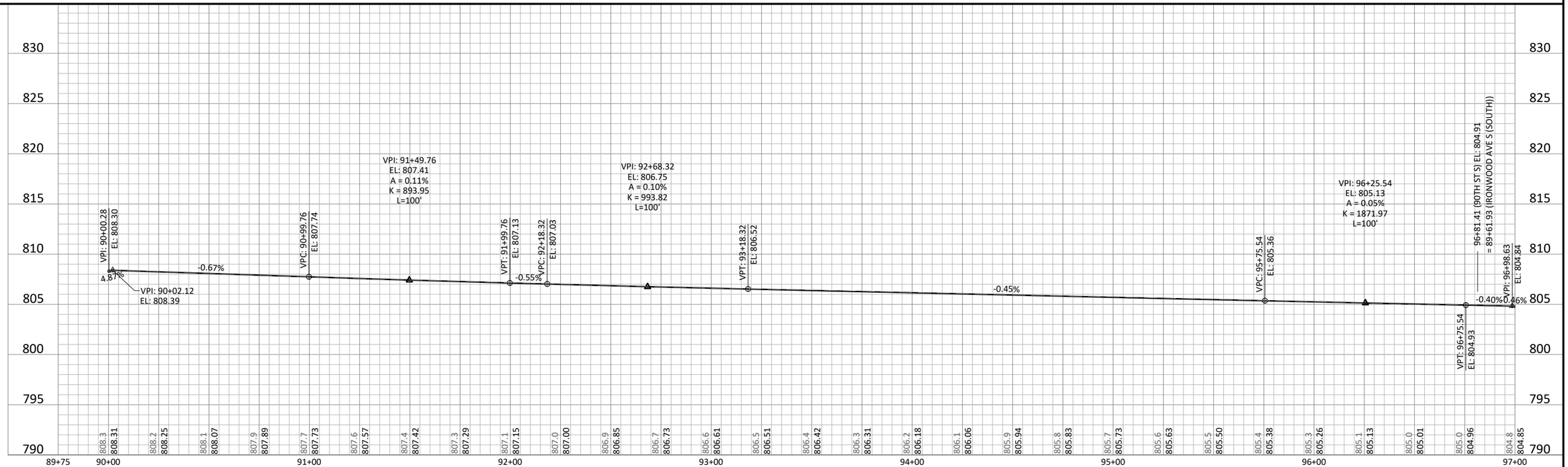


HORZ. SCALE 0 25 50 FEET
VERT. SCALE 0 5 10 FEET

I HEREBY CERTIFY THAT THIS PLAN, SPECIFICATION, OR REPORT WAS PREPARED BY ME OR UNDER MY DIRECT SUPERVISION AND THAT I AM A DULY LICENSED PROFESSIONAL ENGINEER UNDER THE LAWS OF THE STATE OF MINNESOTA.

MICHAEL J BOEX
LIC. NO. 44576 DATE MM/DD/YYYY


BOLTON & MENK
3507 HIGH POINT DRIVE NORTH
BLDG. 1 - SUITE E130
OAKDALE, MN 55128
Phone: (651) 704-9970
Email: Oakdale@bolton-menk.com
www.bolton-menk.com


Cottage Grove
Where Pride and Prosperity Meet

| DESIGNED | ANO |
|---|---|
| DRAWN | BNM |
| CHECKED | MJB |
| CLIENT PROJ. NO. | 137045 |

| NO. | ISSUED FOR | DATE |
|---|---|---|
| | | |

CITY OF COTTAGE GROVE
2026 PAVEMENT MANAGEMENT PROJECT
STREET IMPROVEMENTS
90TH STREET

SHEET C6.16


©Bolton & Menk, Inc. 2026. All Rights Reserved

H:\COTT\24X\137045000\CAD\C3D\137045C601.dwg 2/25/2026 6:32:49 AM

FULL DEPTH PAVEMENT REMOVAL AND REPLACEMENT WITH FULL AND GUTTER REPLACEMENT
SEE TYPICAL SECTIONS ON SHEET C1.01

NOTES.
1. STREET PROFILES REPRESENT THE EXISTING CENTERLINE GRADES
2. PATCH DRIVEWAYS AT CURB REPLACEMENT LOCATION PER STANDARD DETAIL STR-20
3. REPLACE TOP SECTIONS ON ALL GATE VALVES AS PART OF ADJUSTMENT.
4. REPLACE ALL STRUCTURE ADJUSTMENT RINGS ON ALL STRUCTURES WITHIN PAVEMENT
5. EXISTING CATCH BASIN RINGS TO BE REPLACED OR LINED AS DETERMINED BY ENGINEER IN THE FIELD.
6. COORDINATE SERVICE LOCATIONS FOR S&W STAMPS PRIOR TO CURB REPLACEMENT
7. SEE C7.08 FOR STRIPING PLAN

(S) (D) ADJUST STRUCTURES

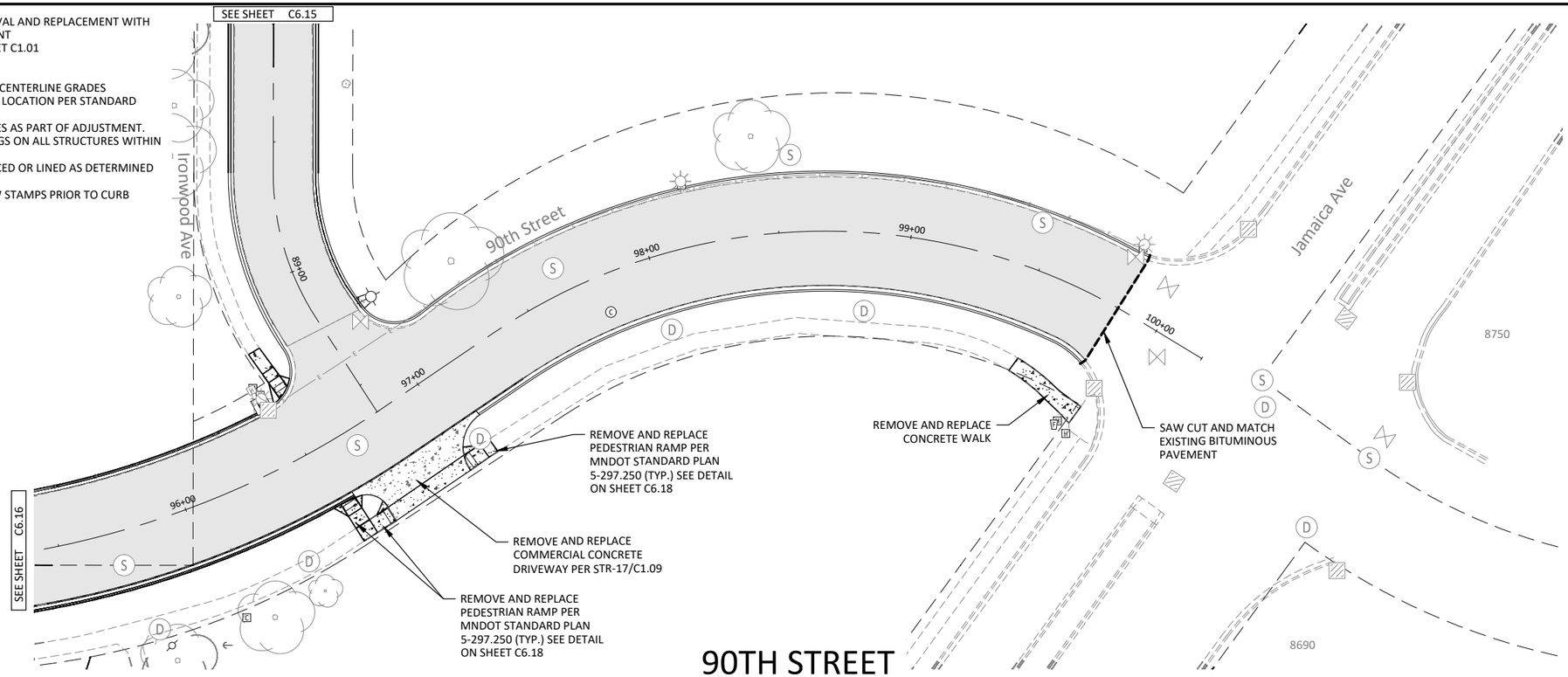


# 90TH STREET

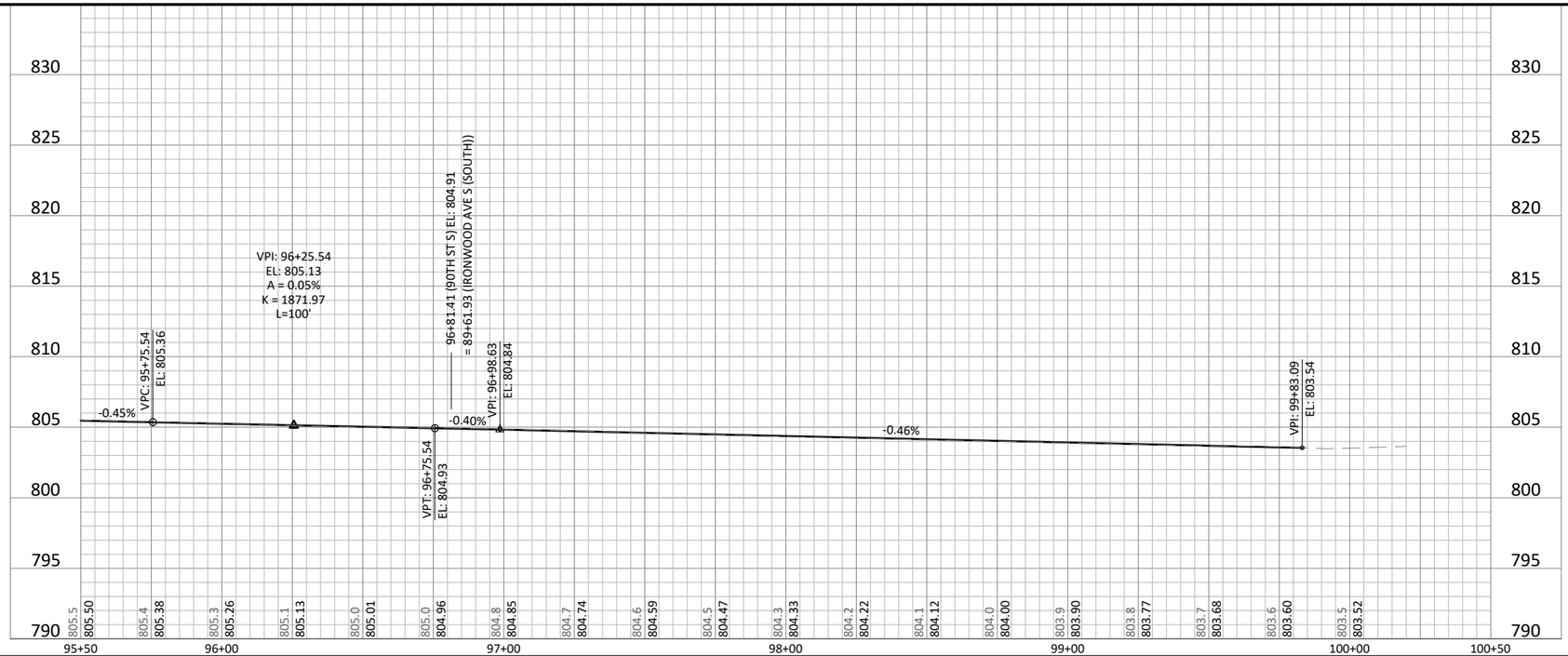


HORZ. SCALE 0 25 50 FEET
VERT. SCALE 0 5 10 FEET

I HEREBY CERTIFY THAT THIS PLAN, SPECIFICATION, OR REPORT WAS PREPARED BY ME OR UNDER MY DIRECT SUPERVISION AND THAT I AM A DULY LICENSED PROFESSIONAL ENGINEER UNDER THE LAWS OF THE STATE OF MINNESOTA.
MICHAEL J BOEX
LIC. NO. 44576 DATE MM/DD/YYYY


BOLTON & MENK
3507 HIGH POINT DRIVE NORTH
BLDG. 1 - SUITE E130
OAKDALE, MN 55128
Phone: (651) 704-9970
Email: Oakdale@bolton-menk.com
www.bolton-menk.com


Cottage Grove
Where Pride and Prosperity Meet

| | |
|---|---|
| DESIGNED | ANO |
| DRAWN | BNM |
| CHECKED | MJB |
| CLIENT PROJ. NO. | 137045 |

| NO. | ISSUED FOR | DATE |
|---|---|---|
| | | |

CITY OF COTTAGE GROVE
2026 PAVEMENT MANAGEMENT PROJECT
STREET IMPROVEMENTS
90TH STREET

SHEET C6.17


©Bolton & Menk, Inc. 2026. All Rights Reserved
H:\COTT\24X1370450000\CAD\C3D\137045C601.dwg 2/25/2026 6:42:02 AM

## IRONWOOD AVE & INWOOD AVE

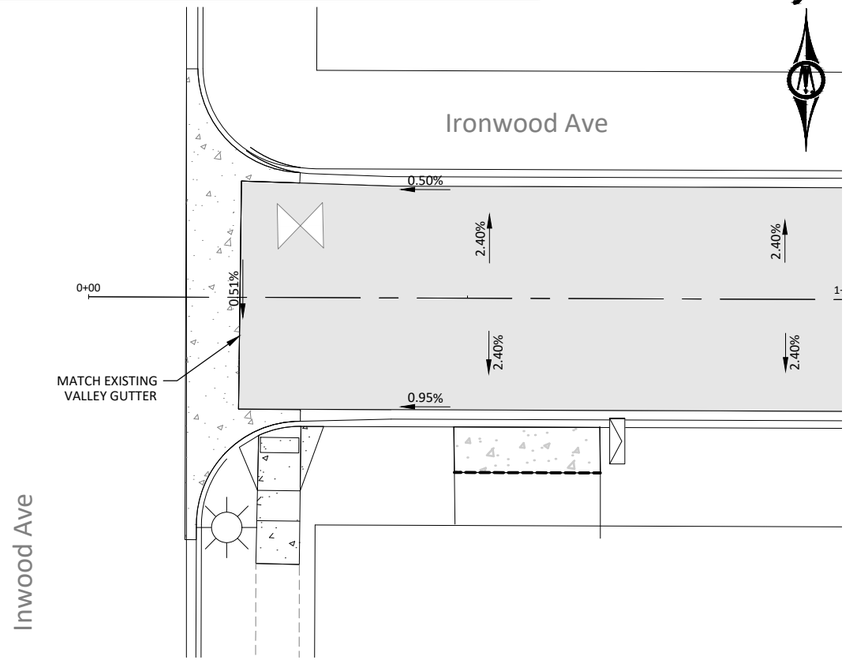


## IRONWOOD AVE & IRA AVE

## IRONWOOD AVE & 88TH ST

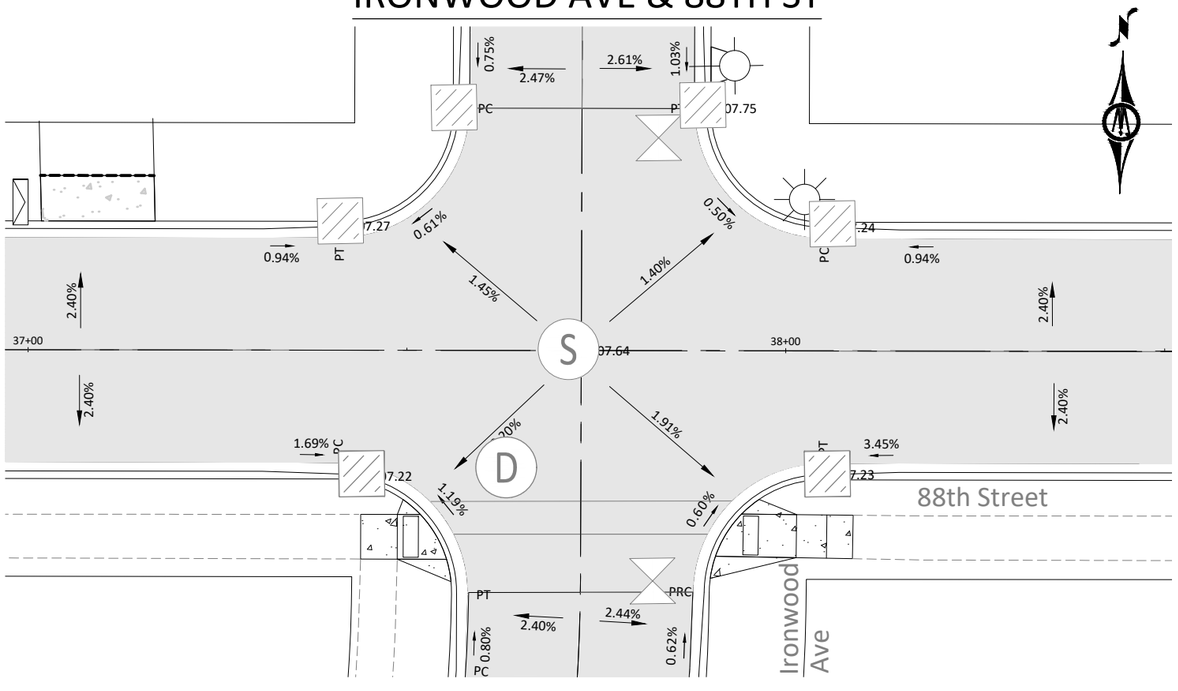


## 88TH ST & INWOOD AVE

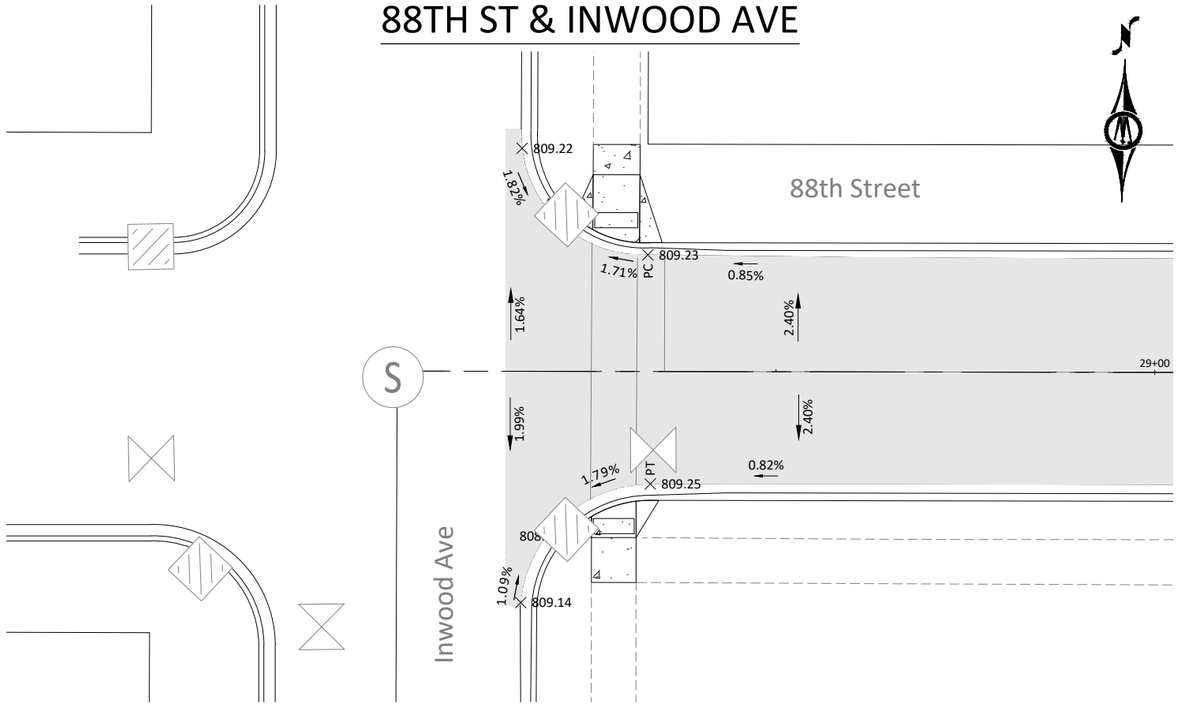


©Bolton & Menk, Inc. 2026. All Rights Reserved
H:\CITY\2Ax\13704500\V\CAD\C3D\137045C618.dwg 2/25/2026 7:36:56 AM

HORZ. SCALE 0 20 40 FEET

I HEREBY CERTIFY THAT THIS PLAN, SPECIFICATION, OR REPORT WAS PREPARED BY ME OR UNDER MY DIRECT SUPERVISION AND THAT I AM A DULY LICENSED PROFESSIONAL ENGINEER UNDER THE LAWS OF THE STATE OF MINNESOTA.

MICHAEL J BOEX
LIC. NO. 44576 DATE MM/DD/YYYY

BOLTON & MENK
3507 HIGH POINT DRIVE NORTH
BLDG. 1 - SUITE E130
OAKDALE, MN 55128
Phone: (651) 704-9970
Email: Oakdale@bolton-menk.com
www.bolton-menk.com

Cottage Grove
Where Pride and Prosperity Meet

| | |
|---|---|
| DESIGNED | ANO |
| DRAWN | BNM |
| CHECKED | MJB |
| CLIENT PROJ. NO. | 137045 |

| NO. | ISSUED FOR | DATE |
|---|---|---|
| | | |

CITY OF COTTAGE GROVE
2026 PAVEMENT MANAGEMENT PROJECT
INTERSECTION DETAILS
IRONWOOD AVE, IRA AVE, 88TH ST

SHEET C6.18

## 88TH ST & IRA AVE

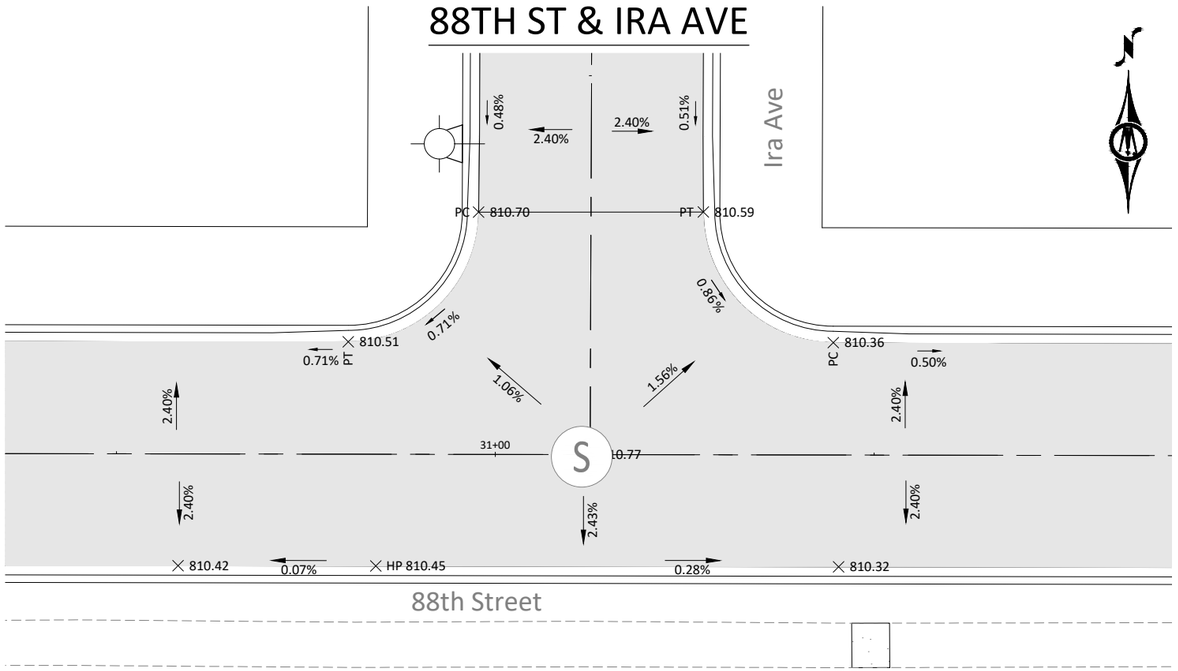


## IRISH AVE CT

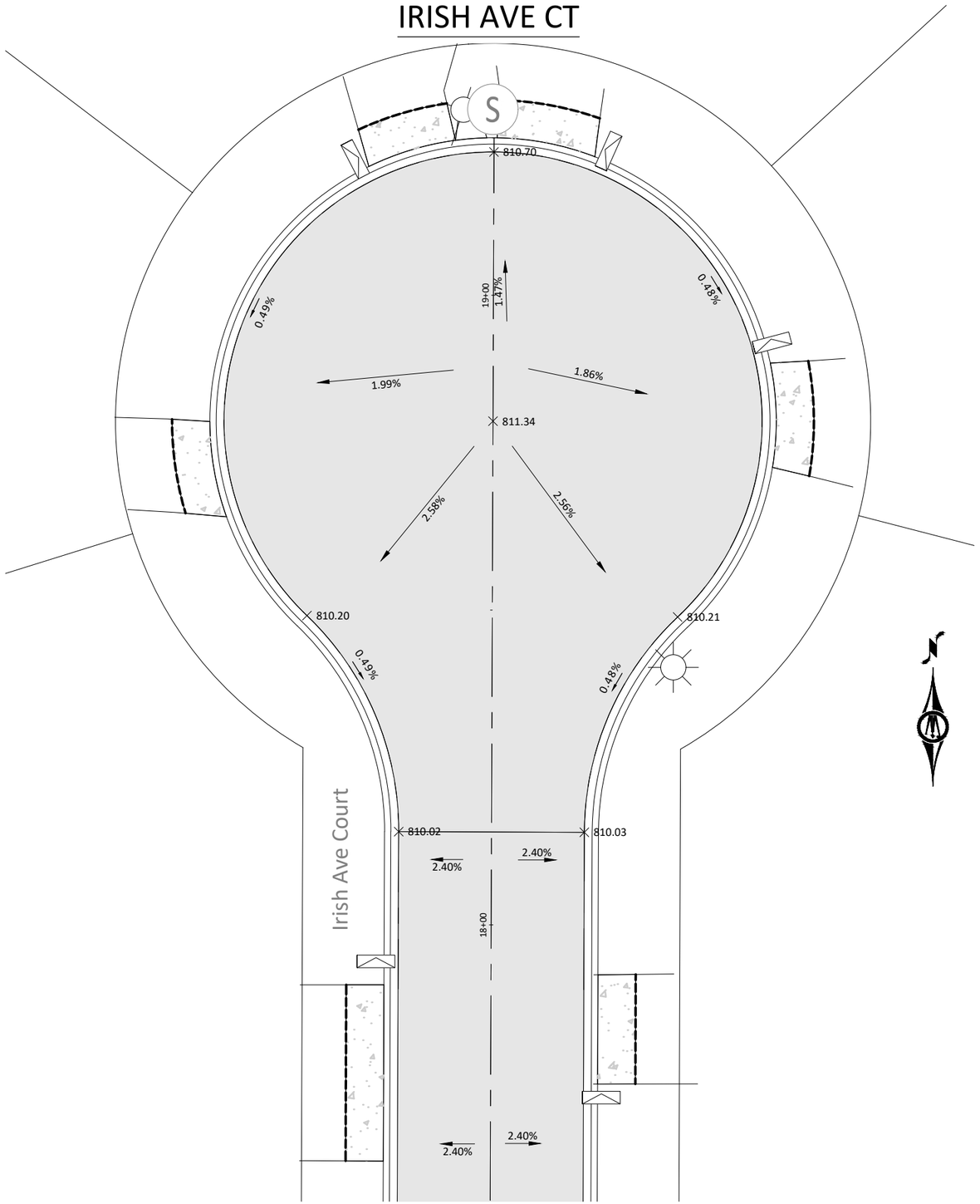


## 88TH ST & IRISH AVE CT

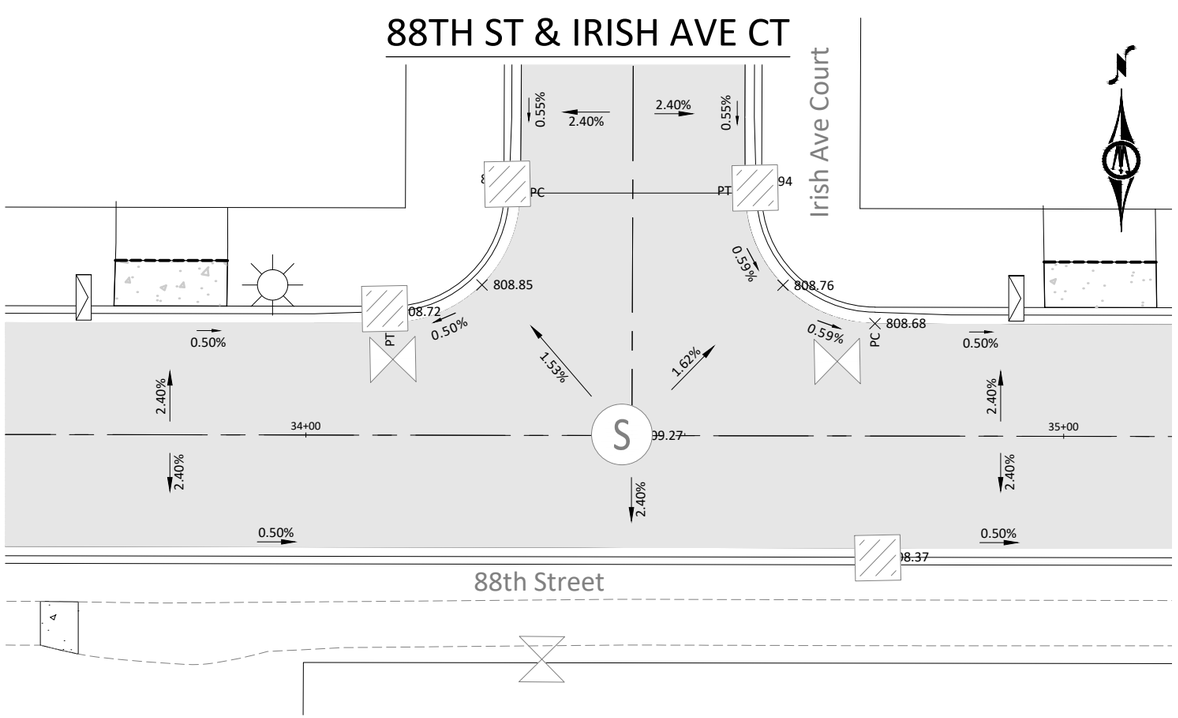


© Bolton & Menk, Inc. 2026. All Rights Reserved
H:\COTT\24X\137045001\CAD\C3D\137045c618.dwg 2/25/2026 7:36:47 AM

HORZ. SCALE 0 20 40 FEET

I HEREBY CERTIFY THAT THIS PLAN, SPECIFICATION, OR REPORT WAS PREPARED BY ME OR UNDER MY DIRECT SUPERVISION AND THAT I AM A DULY LICENSED PROFESSIONAL ENGINEER UNDER THE LAWS OF THE STATE OF MINNESOTA.
MICHAEL J BOEX
LIC. NO. 44576 DATE MM/DD/YYYY

BOLTON & MENK
3507 HIGH POINT DRIVE NORTH
BLDG. 1 - SUITE E130
OAKDALE, MN 55128
Phone: (651) 704-9970
Email: Oakdale@bolton-menk.com
www.bolton-menk.com

Cottage Grove
Where Pride and Prosperity Meet

| DESIGNED | ANO |
|---|---|
| DRAWN | BNM |
| CHECKED | MJB |
| CLIENT PROJ. NO. | 137045 |

| NO. | ISSUED FOR | DATE |
|---|---|---|
| | | |

CITY OF COTTAGE GROVE
2026 PAVEMENT MANAGEMENT PROJECT
INTERSECTION DETAILS
88TH ST, IRA AVE, 88TH ST, IRISH AVE CT

SHEET C6.19

# 88TH ST & ISLE AVE

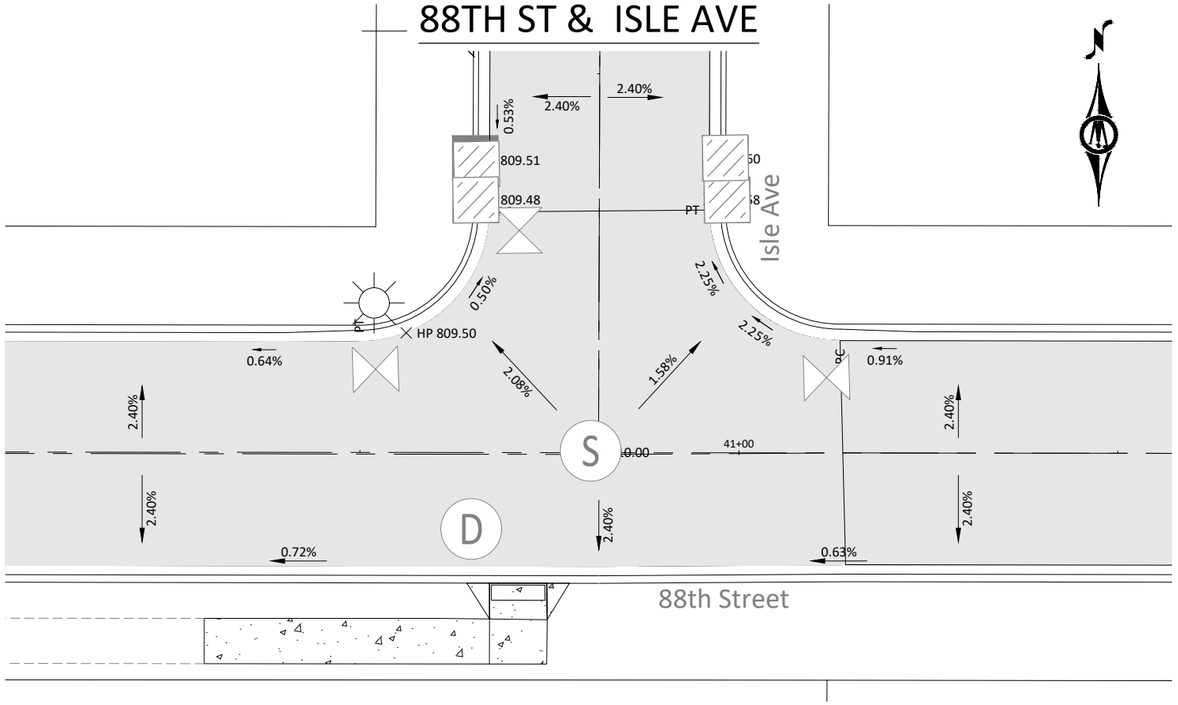


# ISLE AVE & ISLE AVE

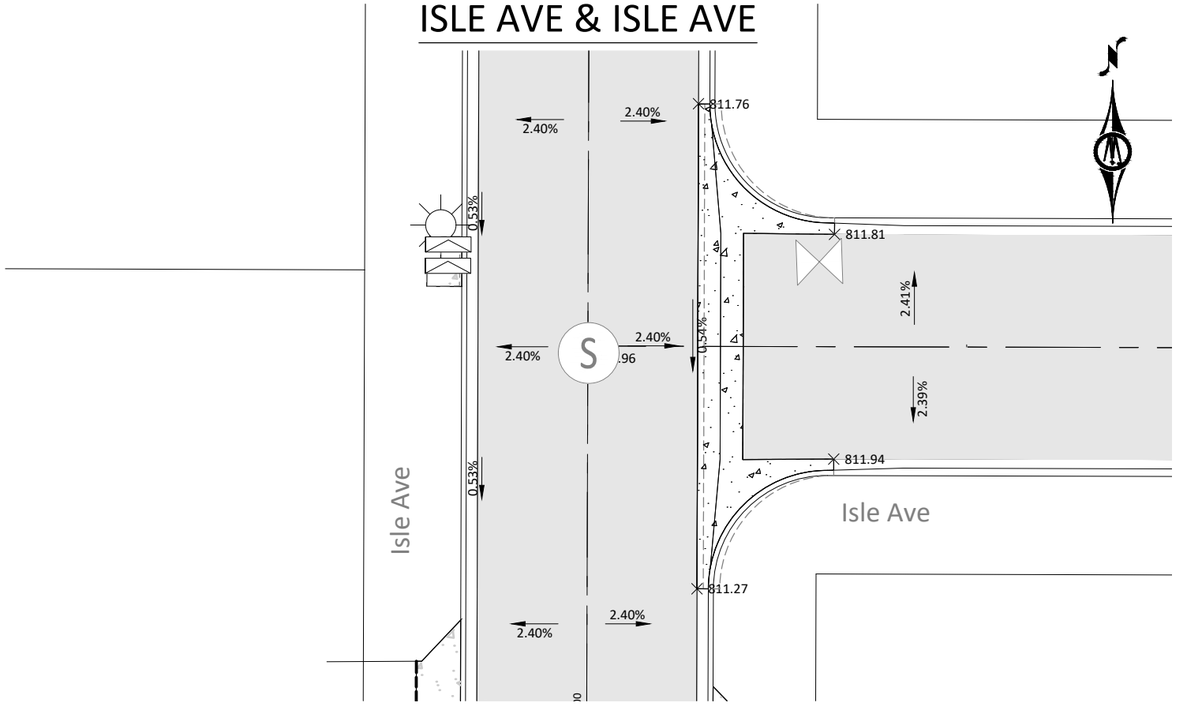


# ISLE AVE

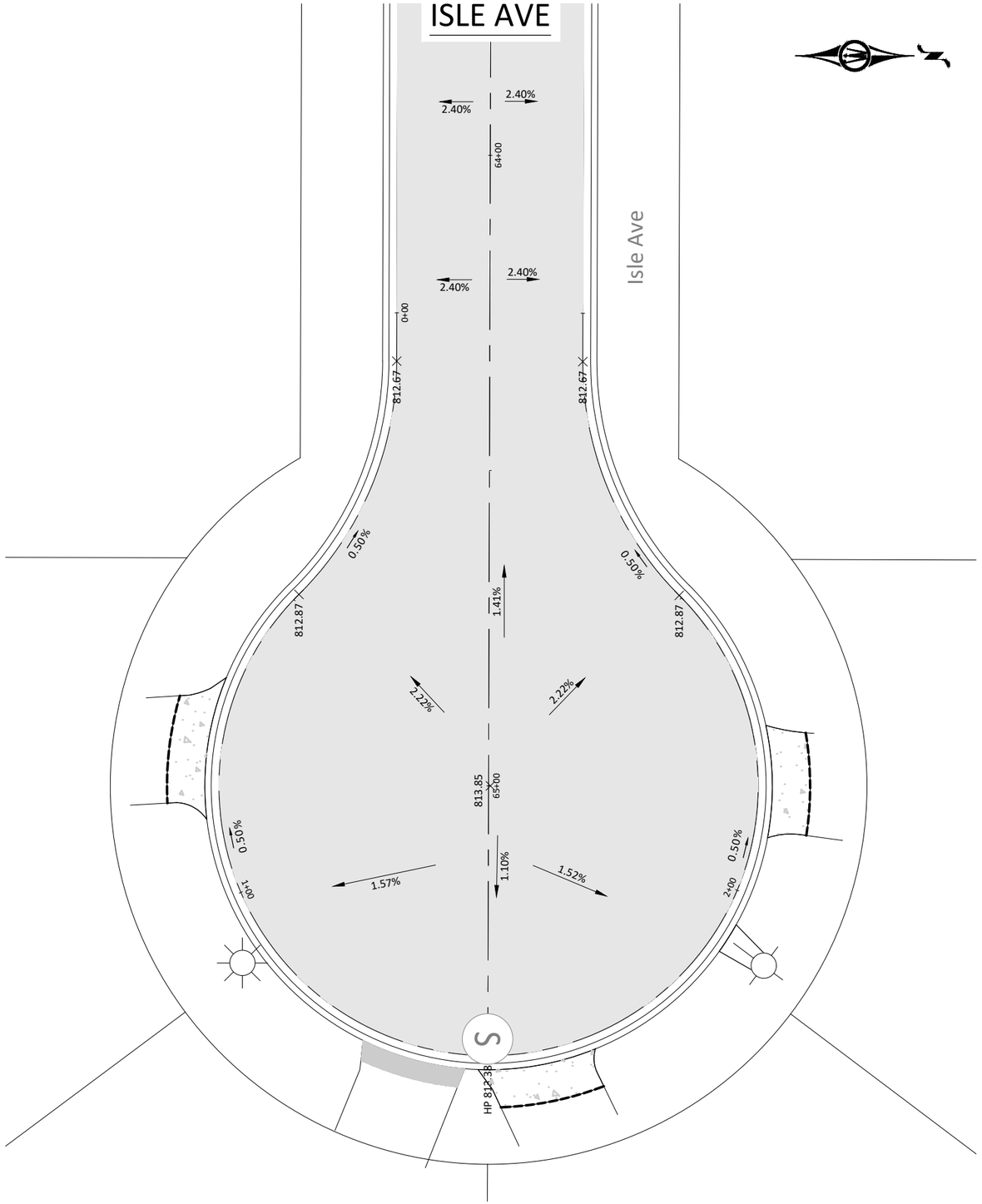


©Bolton & Menk, Inc. 2026. All Rights Reserved
H:\CITY\24X\137045000\CAD\C3D\137045C618.dwg 2/25/2026 7:37:51 AM

HORZ. 0 20 40
SCALE FEET

I HEREBY CERTIFY THAT THIS PLAN, SPECIFICATION, OR REPORT WAS PREPARED BY ME OR UNDER MY DIRECT SUPERVISION AND THAT I AM A DULY LICENSED PROFESSIONAL ENGINEER UNDER THE LAWS OF THE STATE OF MINNESOTA.
MICHAEL J BOEX
LIC. NO. 44576 DATE MM/DD/YYYY

BOLTON & MENK
3507 HIGH POINT DRIVE NORTH
BLDG. 1 - SUITE E130
OAKDALE, MN 55128
Phone: (651) 704-9970
Email: Oakdale@bolton-menk.com
www.bolton-menk.com

Cottage Grove
Where Pride and Prosperity Meet

| | |
|---|---|
| DESIGNED | ANO |
| DRAWN | BNM |
| CHECKED | MJB |
| CLIENT PROJ. NO. | 137045 |

| NO. | ISSUED FOR | DATE |
|---|---|---|
| | | |

CITY OF COTTAGE GROVE
2026 PAVEMENT MANAGEMENT PROJECT
INTERSECTION DETAILS
88TH ST & ISLE AVE

SHEET C6.20

## HILLSIDE TR & ISLE AVE

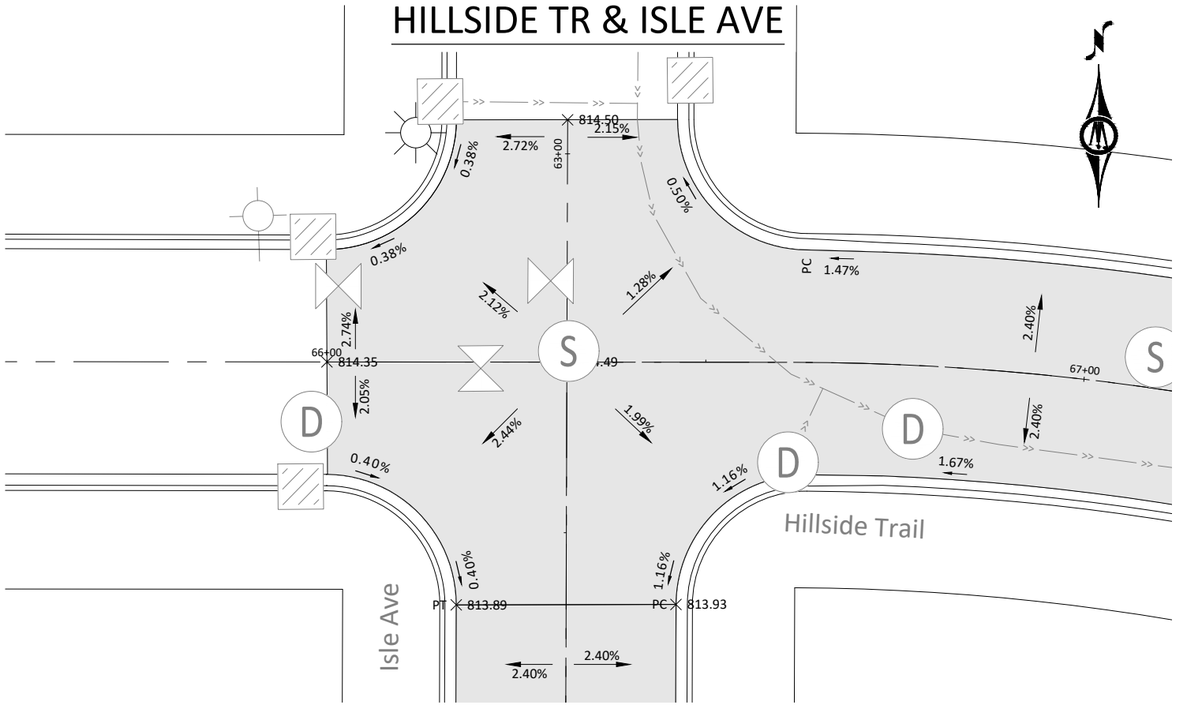


## HILLSIDE TR & IVAN AVE

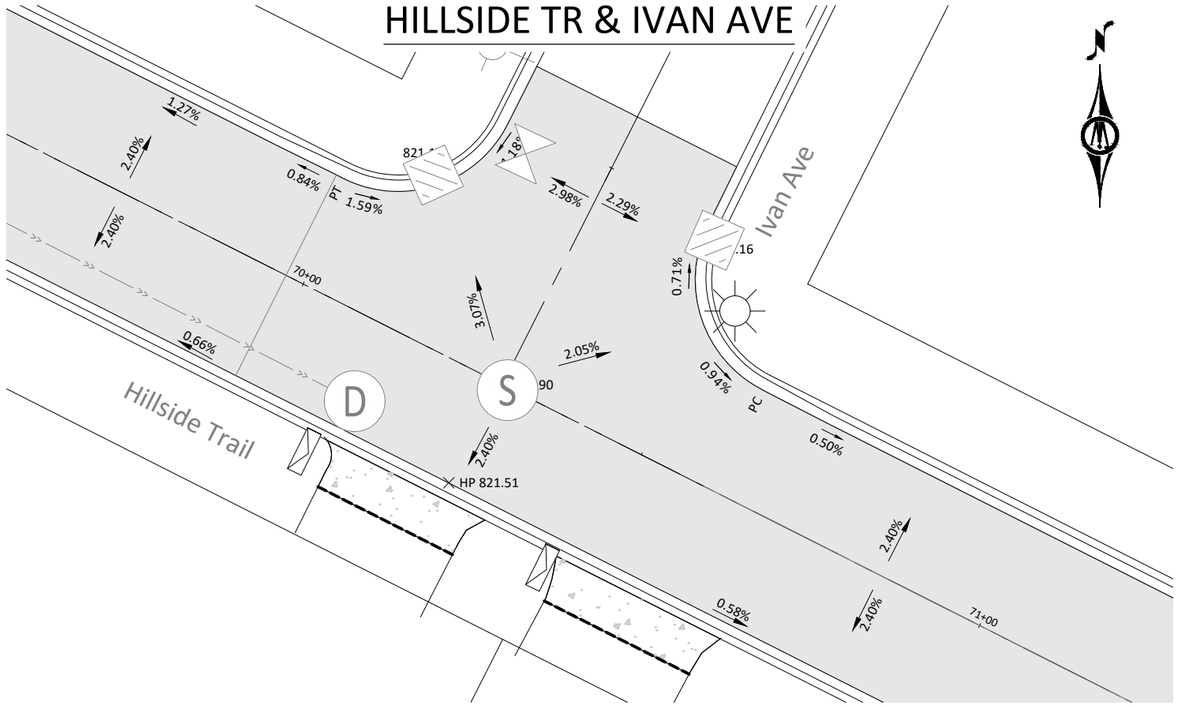


## HILLSIDE TR & IVYWOOD AVE

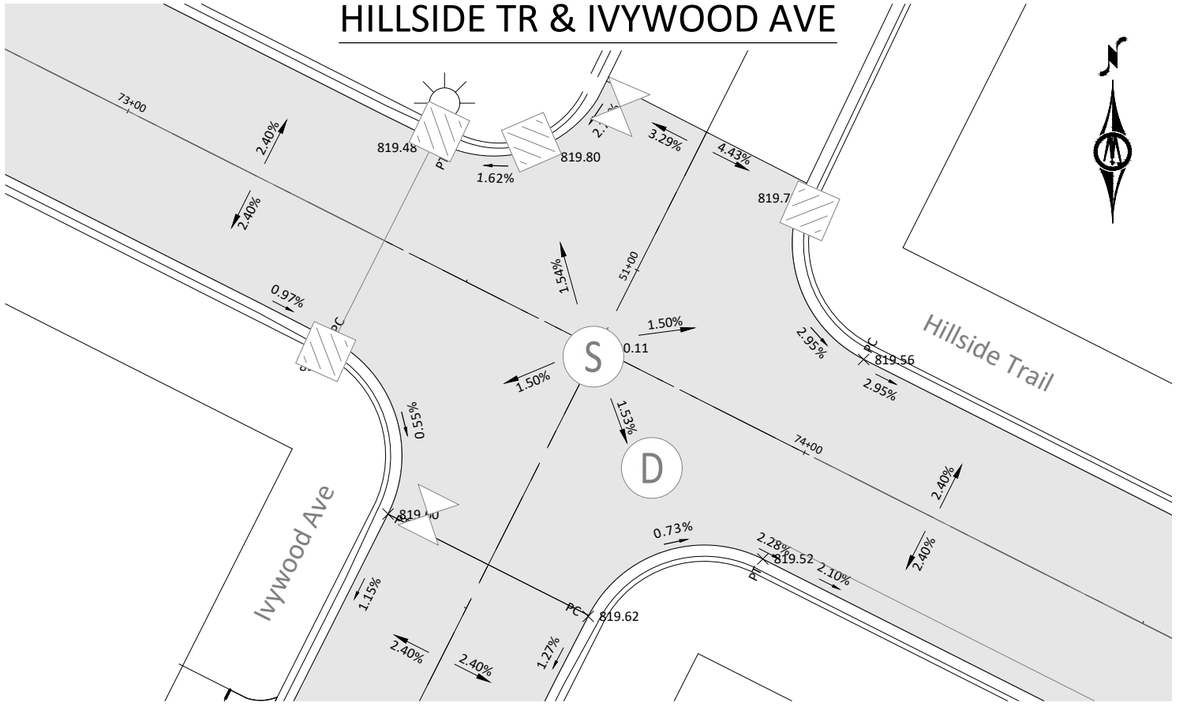


## 90TH ST & JAMAICA AVE

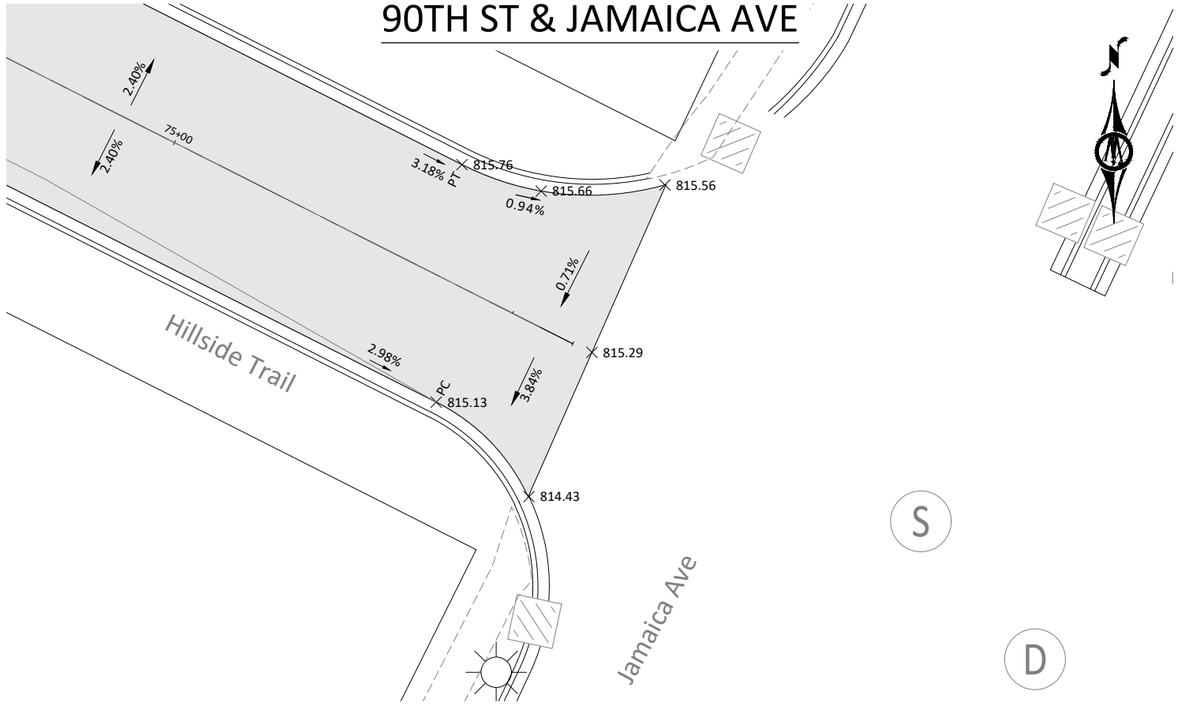


HORZ. SCALE 0 20 40 FEET

I HEREBY CERTIFY THAT THIS PLAN, SPECIFICATION, OR REPORT WAS PREPARED BY ME OR UNDER MY DIRECT SUPERVISION AND THAT I AM A DULY LICENSED PROFESSIONAL ENGINEER UNDER THE LAWS OF THE STATE OF MINNESOTA.

MICHAEL J BOEX
LIC. NO. 44576 DATE MM/DD/YYYY

BOLTON & MENK

3507 HIGH POINT DRIVE NORTH
BLDG. 1 - SUITE E130
OAKDALE, MN 55128
Phone: (651) 704-9970
Email: Oakdale@bolton-menk.com
www.bolton-menk.com

Cottage Grove
Where Pride and Prosperity Meet

| | |
|---|---|
| DESIGNED | ANO |
| DRAWN | BNM |
| CHECKED | MJB |
| CLIENT PROJ. NO. | 137045 |

| NO. | ISSUED FOR | DATE |
|---|---|---|
| | | |

CITY OF COTTAGE GROVE
2026 PAVEMENT MANAGEMENT PROJECT
INTERSECTION DETAILS
ISLE AVE, HILLSIDE TR, IVYWOOD AVE, 88TH ST, 88TH ST CT

SHEET C6.21

© Bolton & Menk, Inc. 2026. All Rights Reserved
H:\COTT\24x137045001\CAD\C3D\137045C618.dwg 2/25/2026 7:38:13 AM

## 88TH ST & IVYWOOD AVE & 88TH ST CT

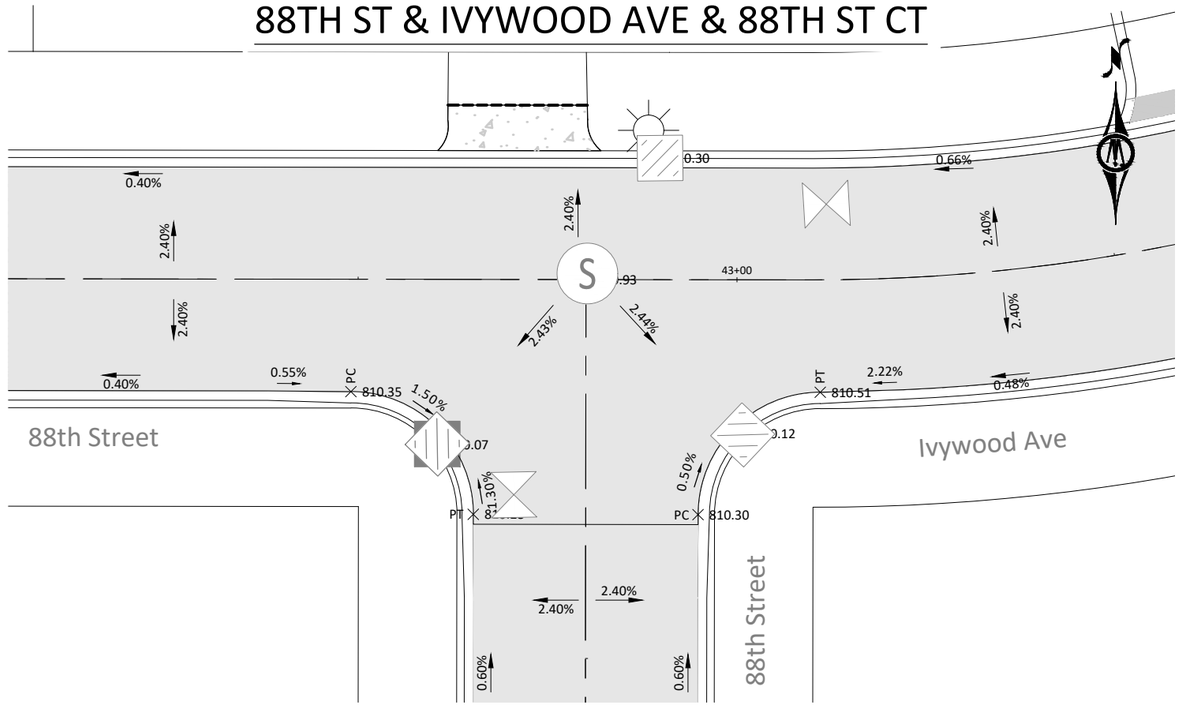


## 88TH ST CT

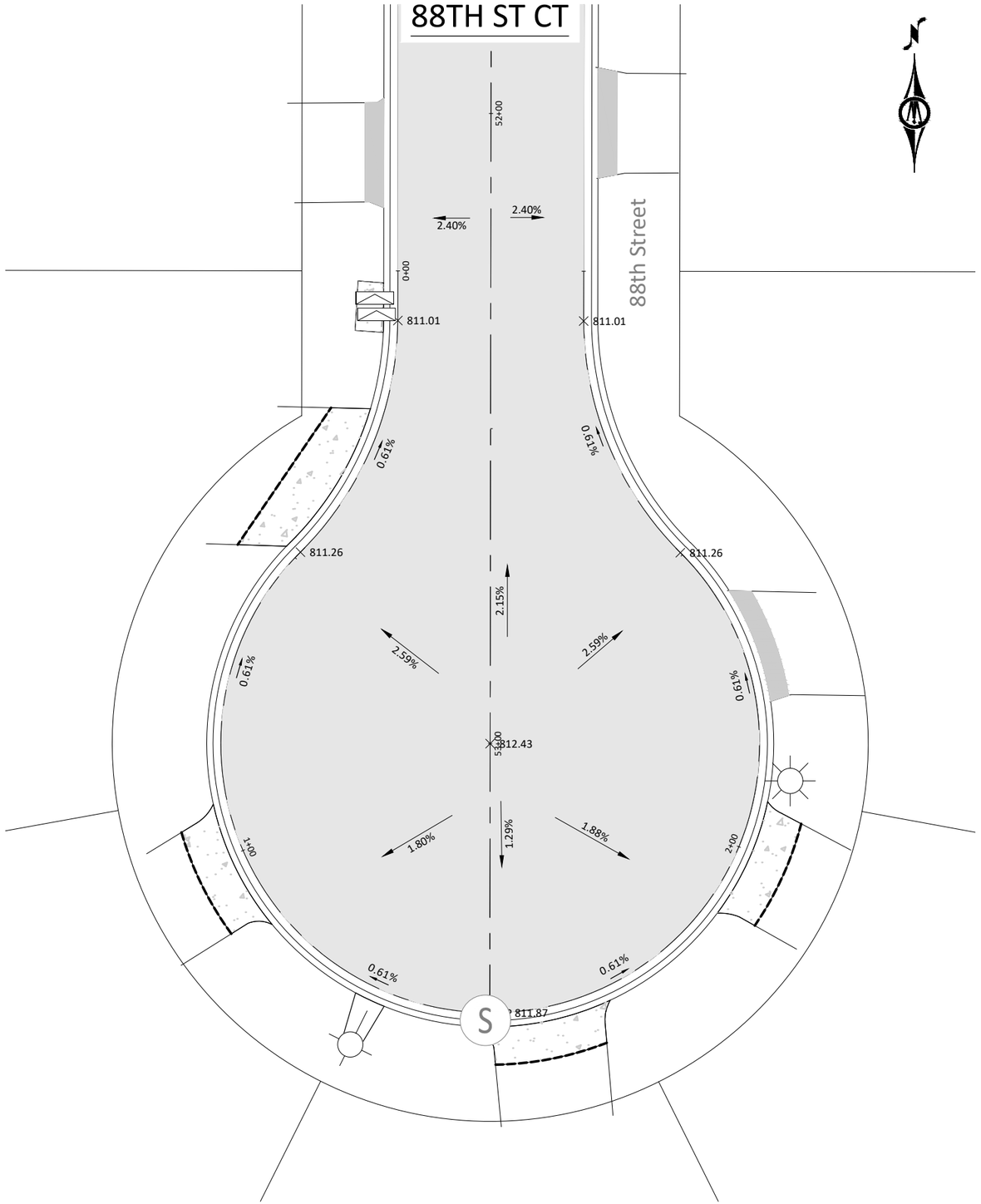


## 90TH ST & INWOOD AVE

© Bolton & Menk, Inc. 2026. All Rights Reserved
H:\COTT\24x137045001\CAD\C3D\137045C618.dwg 2/25/2026 7:38:53 AM

HORZ. SCALE 0 20 40 FEET

I HEREBY CERTIFY THAT THIS PLAN, SPECIFICATION, OR REPORT WAS PREPARED BY ME OR UNDER MY DIRECT SUPERVISION AND THAT I AM A DULY LICENSED PROFESSIONAL ENGINEER UNDER THE LAWS OF THE STATE OF MINNESOTA.

MICHAEL J BOEX
LIC. NO. 44576 DATE MM/DD/YYYY

BOLTON & MENK
3507 HIGH POINT DRIVE NORTH
BLDG. 1 - SUITE E130
OAKDALE, MN 55128
Phone: (651) 704-9970
Email: Oakdale@bolton-menk.com
www.bolton-menk.com

Cottage Grove
Where Pride and Prosperity Meet

| DESIGNED | ANO |
|---|---|
| DRAWN | BNM |
| CHECKED | MJB |
| CLIENT PROJ. NO. | 137045 |

| NO. | ISSUED FOR | DATE |
|---|---|---|
| | | |

CITY OF COTTAGE GROVE
2026 PAVEMENT MANAGEMENT PROJECT
INTERSECTION DETAILS
88TH ST CT, 90TH ST, IRONWOOD AVE

SHEET C6.22

## 90TH ST & IRONWOOD AVE

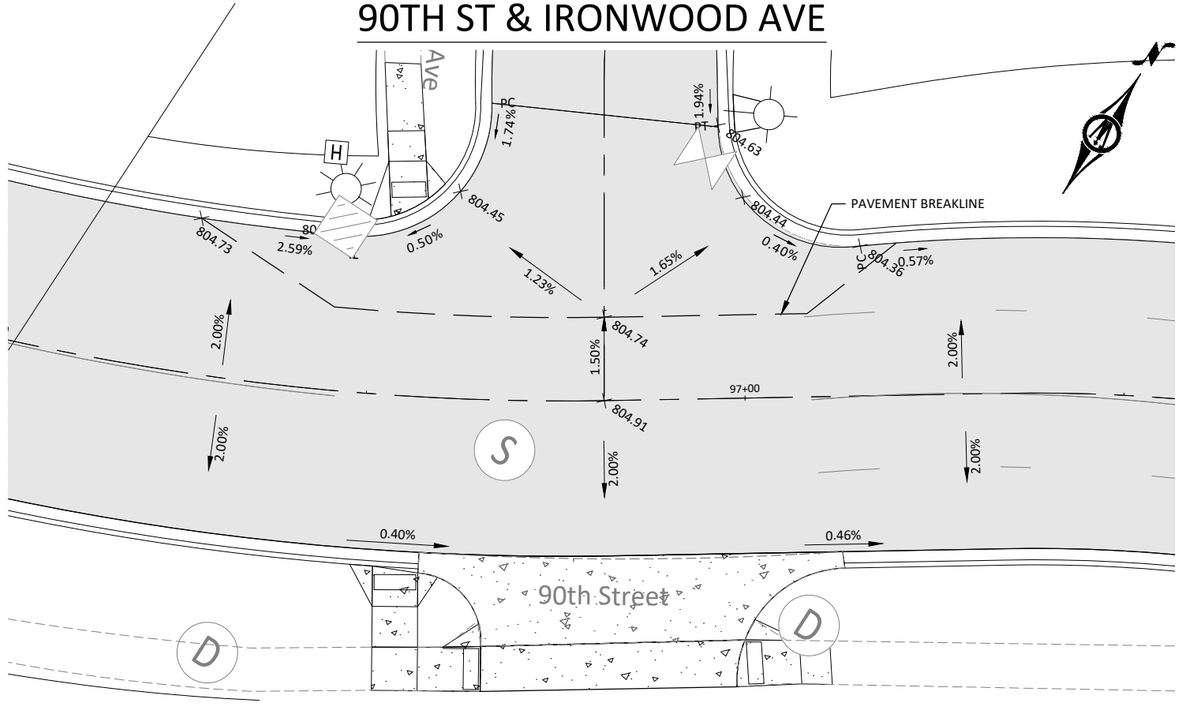


## 90TH ST & JAMAICA AVE

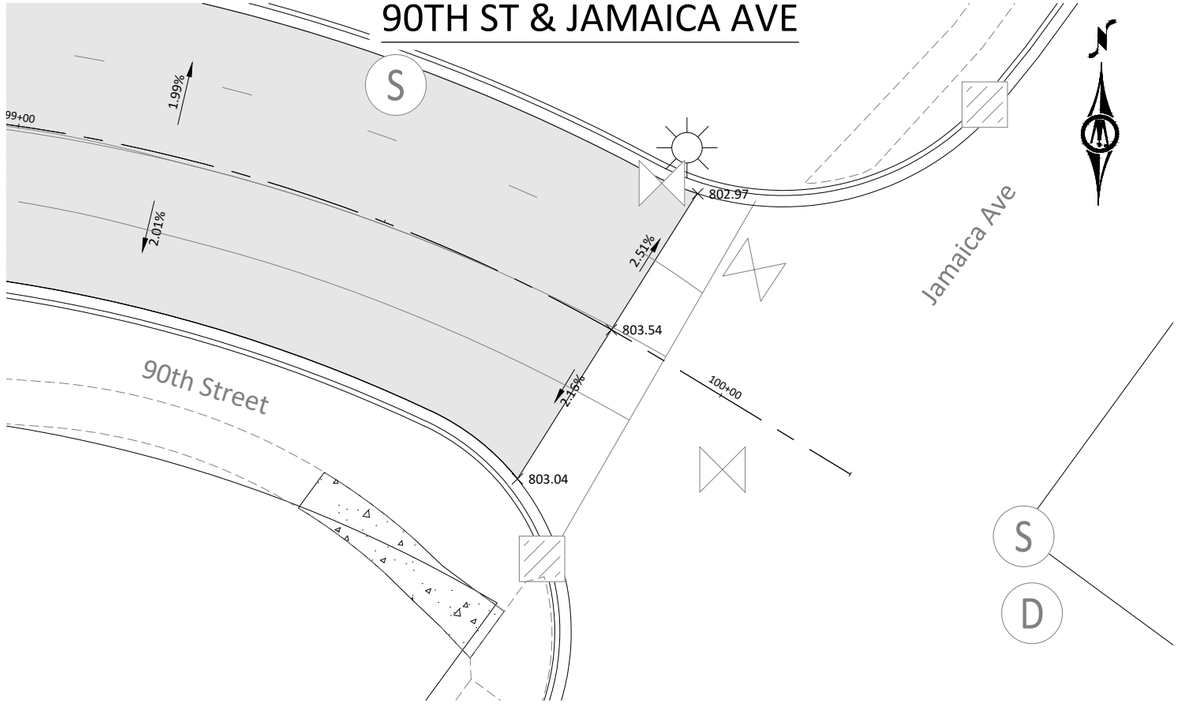


©Bolton & Menk, Inc. 2026. All Rights Reserved
H:\COTT\24X\137045000\CAD\C3D\137045C618.dwg 2/25/2026 7:39:04 AM

HORZ. SCALE 0 20 40 FEET

I HEREBY CERTIFY THAT THIS PLAN, SPECIFICATION, OR REPORT WAS PREPARED BY ME OR UNDER MY DIRECT SUPERVISION AND THAT I AM A DULY LICENSED PROFESSIONAL ENGINEER UNDER THE LAWS OF THE STATE OF MINNESOTA.

MICHAEL J BOEX
LIC. NO. 44576 DATE MM/DD/YYYY

BOLTON & MENK
3507 HIGH POINT DRIVE NORTH
BLDG. 1 - SUITE E130
OAKDALE, MN 55128
Phone: (651) 704-9970
Email: Oakdale@bolton-menk.com
www.bolton-menk.com

Cottage Grove
Where Pride and Prosperity Meet

| DESIGNED | ANO |
|---|---|
| DRAWN | BNM |
| CHECKED | MJB |
| CLIENT PROJ. NO. | 137045 |

| NO. | ISSUED FOR | DATE |
|---|---|---|
| | | |

CITY OF COTTAGE GROVE
2026 PAVEMENT MANAGEMENT PROJECT
INTERSECTION DETAILS
90TH & JAMAICA AVE

SHEET
C6.23

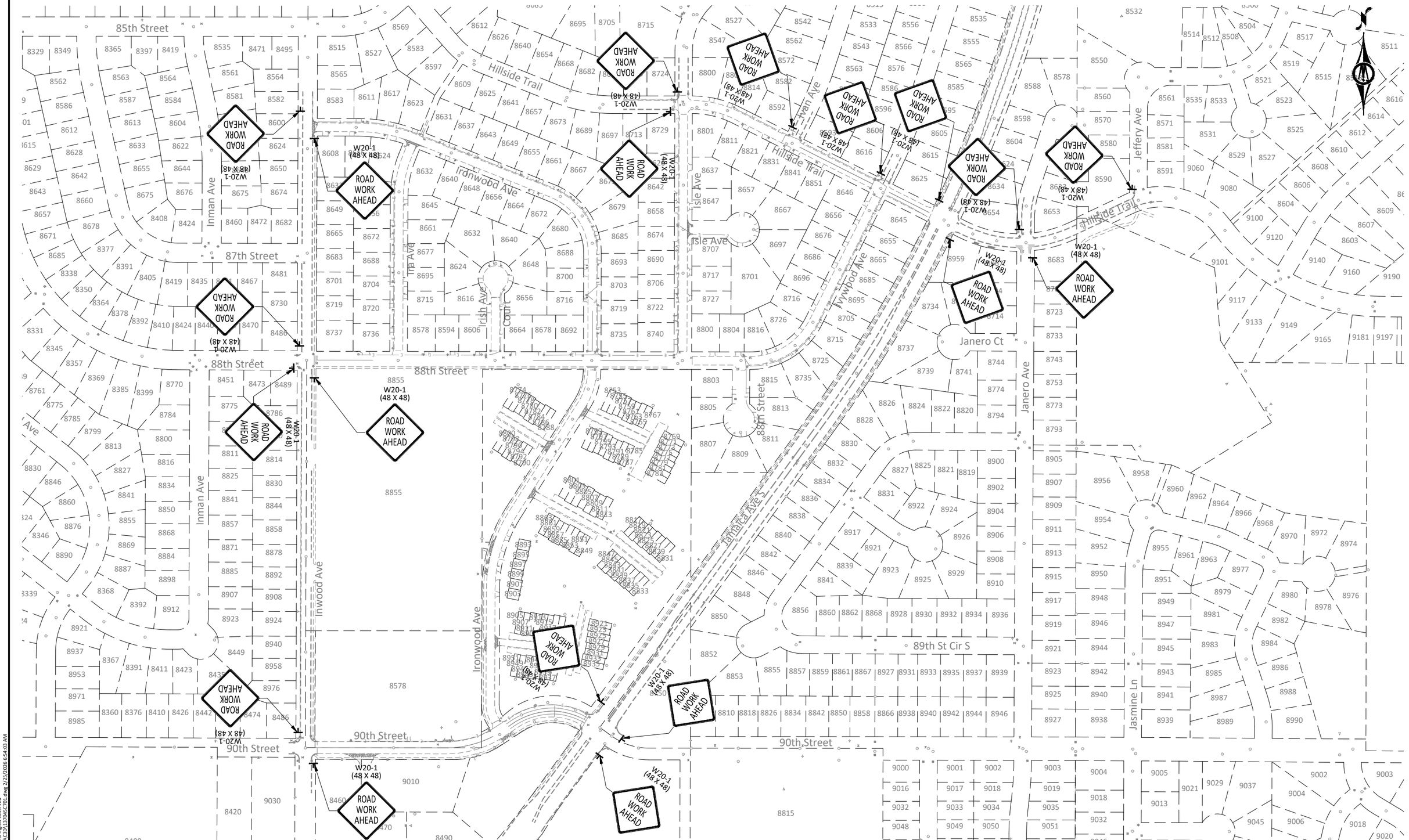


© Bolton & Menk, Inc. 2026. All Rights Reserved
H:\COTT\24X\137045\00\CAD\C3D\137045C701.dwg 2/25/2026 6:54:03 AM

HORZ. 0 125 250
SCALE FEET

I HEREBY CERTIFY THAT THIS PLAN, SPECIFICATION, OR REPORT WAS PREPARED BY ME OR UNDER MY DIRECT SUPERVISION AND THAT I AM A DULY LICENSED PROFESSIONAL ENGINEER UNDER THE LAWS OF THE STATE OF MINNESOTA.

MICHAEL J BOEX
LIC. NO. 44576 DATE MM/DD/YYYY

BOLTON & MENK
3507 HIGH POINT DRIVE NORTH
BLDG. 1 - SUITE E130
OAKDALE, MN 55128
Phone: (651) 704-9970
Email: Oakdale@bolton-menk.com
www.bolton-menk.com

Cottage Grove
Where Pride and Prosperity Meet

| | |
|---|---|
| DESIGNED | ANO |
| DRAWN | BNM |
| CHECKED | MJB |
| CLIENT PROJ. NO. | 137045 |

| NO. | ISSUED FOR | DATE |
|---|---|---|
| | | |

CITY OF COTTAGE GROVE
2026 PAVEMENT MANAGEMENT PROJECT
TRAFFIC CONTROL

SHEET C7.01

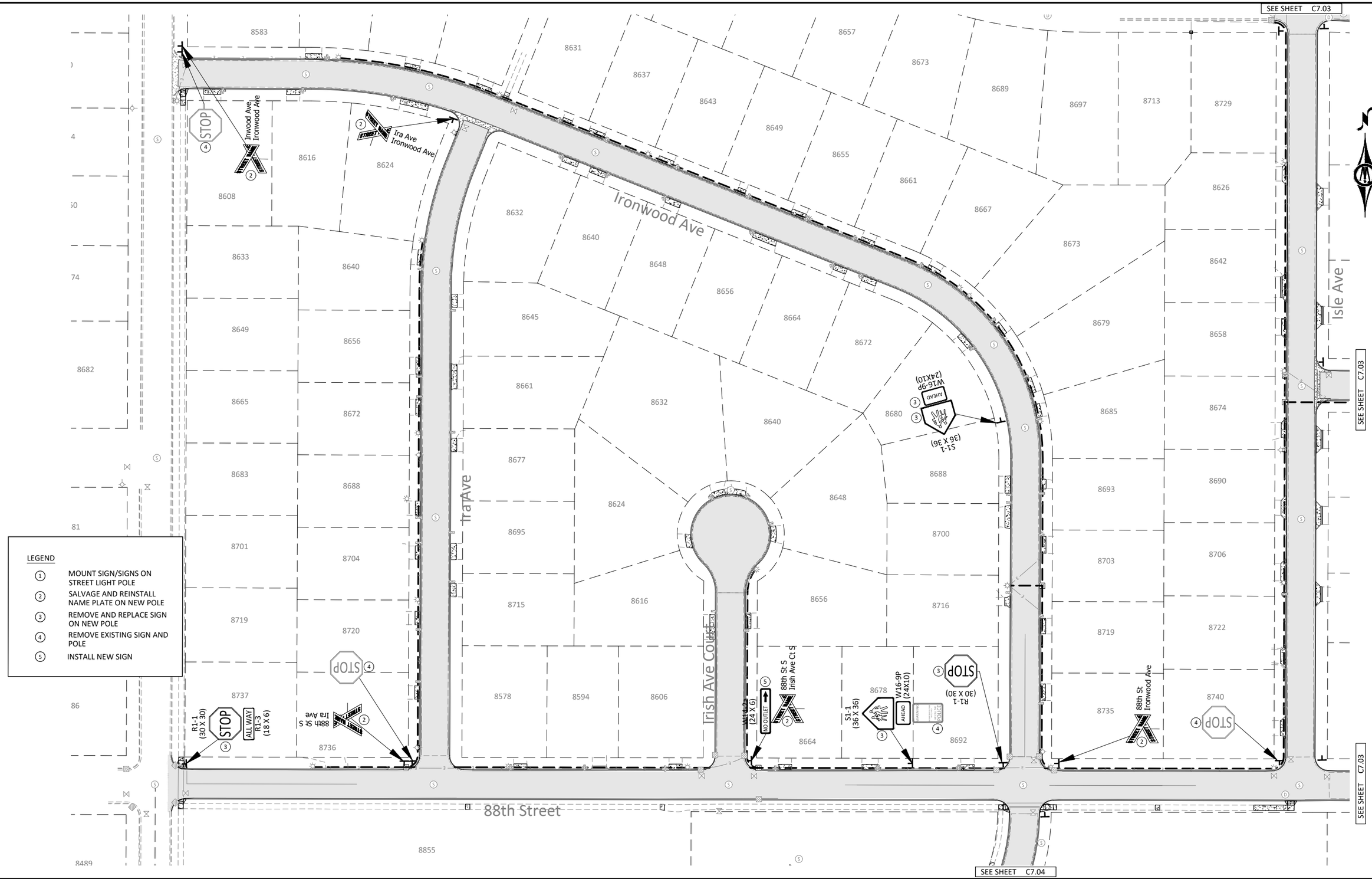


LEGEND

1. MOUNT SIGN/SIGNS ON STREET LIGHT POLE
2. SALVAGE AND REINSTALL NAME PLATE ON NEW POLE
3. REMOVE AND REPLACE SIGN ON NEW POLE
4. REMOVE EXISTING SIGN AND POLE
5. INSTALL NEW SIGN

©Bolton & Menk, Inc. 2026. All Rights Reserved
H:\COTT\24X13\37045000\CAD\C3D\137045C702.dwg 2/25/2026 7:08:23 AM

HORZ. SCALE 0 50 100 FEET

I HEREBY CERTIFY THAT THIS PLAN, SPECIFICATION, OR REPORT WAS PREPARED BY ME OR UNDER MY DIRECT SUPERVISION AND THAT I AM A DULY LICENSED PROFESSIONAL ENGINEER UNDER THE LAWS OF THE STATE OF MINNESOTA.

MICHAEL J BOEX
LIC. NO. 44576 DATE MM/DD/YYYY

BOLTON & MENK
3507 HIGH POINT DRIVE NORTH
BLDG. 1 - SUITE E130
OAKDALE, MN 55128
Phone: (651) 704-9970
Email: Oakdale@bolton-menk.com
www.bolton-menk.com

Cottage Grove
Where Pride and Prosperity Meet

| | |
|---|---|
| DESIGNED | ANO |
| DRAWN | BNM |
| CHECKED | MJB |
| CLIENT PROJ. NO. | 137045 |

| NO. | ISSUED FOR | DATE |
|---|---|---|
| | | |

CITY OF COTTAGE GROVE
2026 PAVEMENT MANAGEMENT PROJECT
STREET SIGNAGE PLAN

SHEET C7.02

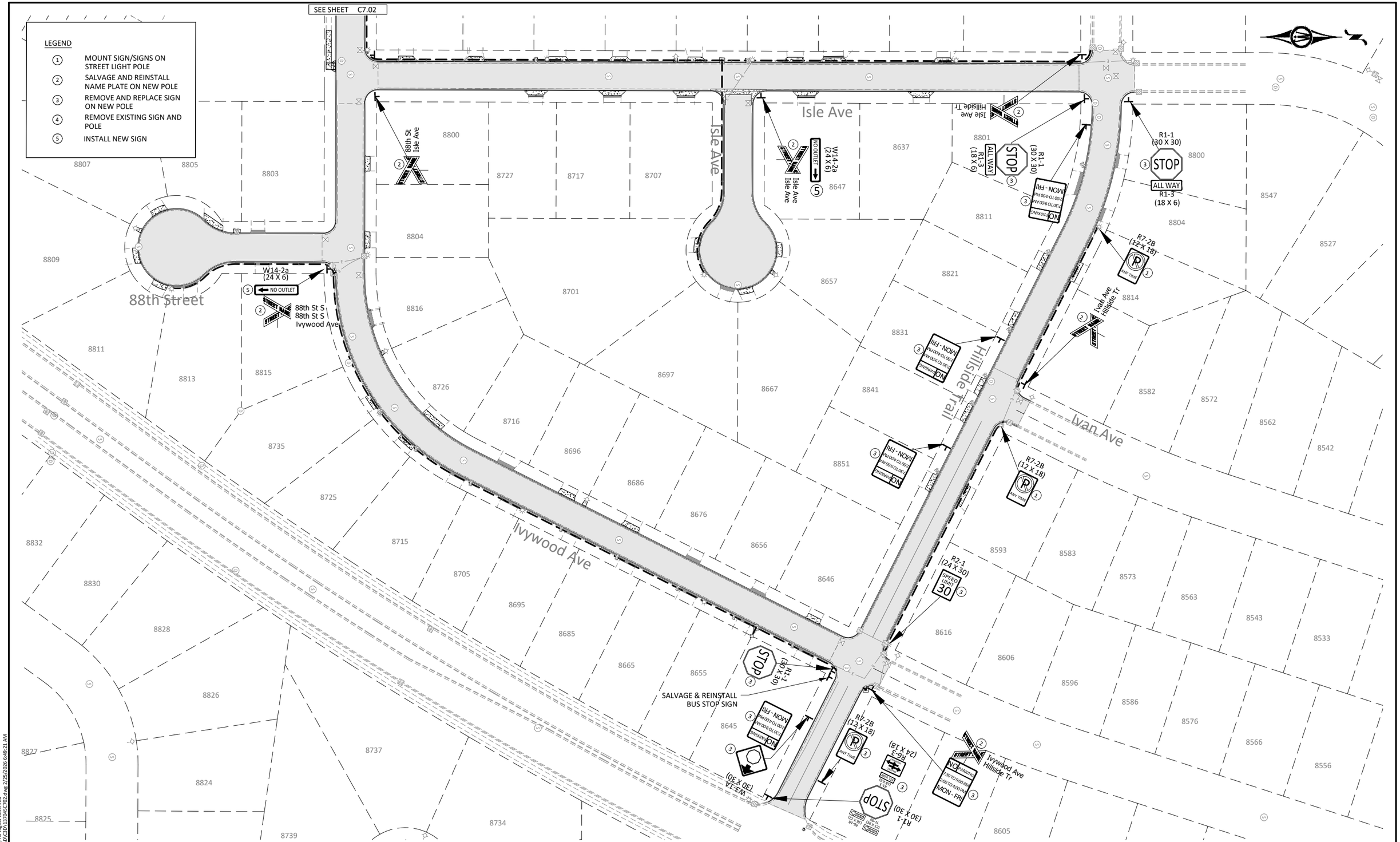


©Bolton & Menk, Inc. 2026. All Rights Reserved
H:\CO\T\1\24X\137045000\CAD\C3D\137045C702.dwg 2/25/2026 6:49:21 AM

HORZ. 0 50 100
SCALE FEET

I HEREBY CERTIFY THAT THIS PLAN, SPECIFICATION, OR REPORT WAS PREPARED BY ME OR UNDER MY DIRECT SUPERVISION AND THAT I AM A DULY LICENSED PROFESSIONAL ENGINEER UNDER THE LAWS OF THE STATE OF MINNESOTA.

MICHAEL J BOEX
LIC. NO. 44576 DATE MM/DD/YYYY

BOLTON & MENK
3507 HIGH POINT DRIVE NORTH
BLDG. 1 - SUITE E130
OAKDALE, MN 55128
Phone: (651) 704-9970
Email: Oakdale@bolton-menk.com
www.bolton-menk.com

Cottage Grove
Where Pride and Prosperity Meet

| | |
|---|---|
| DESIGNED | ANO |
| DRAWN | BNM |
| CHECKED | MJB |
| CLIENT PROJ. NO. | 137045 |

| NO. | ISSUED FOR | DATE |
|---|---|---|
| | | |

CITY OF COTTAGE GROVE
2026 PAVEMENT MANAGEMENT PROJECT
STREET SIGNAGE PLAN

SHEET C7.03

LEGEND

1. MOUNT SIGN/SIGNS ON STREET LIGHT POLE
2. SALVAGE AND REINSTALL NAME PLATE ON NEW POLE
3. REMOVE AND REPLACE SIGN ON NEW POLE
4. REMOVE EXISTING SIGN AND POLE
5. INSTALL NEW SIGN

Ironwood Ave

90th Street

88th Street

R1-1 (30 X 30)

W3-1A (30 X 30)

90th St Ironwood Ave

W16-9P (24X10)

S1-1 (30 X 30)

SEE SHEET C7.05

SEE SHEET C7.02

8951 8949 8947 8945 8943 8941 8939 8937 8935 8933 8931 8929 8927 8925 8923 8921 8919 8917 8915 8913 8911 8909 8907 8905 8903 8901 8899 8897 8895 8893 8891 8889 8887 8885 8883 8881 8879 8877 8875 8873 8871 8869 8867 8865 8863 8861 8859 8857 8855 8853 8851 8849 8847 8845 8843 8841 8839 8837 8835 8833 8831 8829 8827 8825 8823 8821 8819 8817 8815 8813 8811 8809 8807 8805 8803 8801 8800 8798 8796 8794 8792 8790 8788 8786 8784 8782 8780 8778 8776 8774 8772 8770 8768 8766 8764 8762 8760 8758 8756 8754 8752 8750 8799 8797 8795 8793 8791 8789 8787 8785 8783 8781 8779 8777 8775 8773 8771 8769 8767 8765 8763 8761 8759 8757 8755 8753

©Bolton & Menk, Inc. 2026. All Rights Reserved
H:\COTT\24X\137045000\CAD\C3D\137045C702.dwg 2/25/2026 7:06:20 AM

HORZ. SCALE 0 50 100 FEET

I HEREBY CERTIFY THAT THIS PLAN, SPECIFICATION, OR REPORT WAS PREPARED BY ME OR UNDER MY DIRECT SUPERVISION AND THAT I AM A DULY LICENSED PROFESSIONAL ENGINEER UNDER THE LAWS OF THE STATE OF MINNESOTA.

MICHAEL J BOEX
LIC. NO. 44576 DATE MM/DD/YYYY

BOLTON & MENK
3507 HIGH POINT DRIVE NORTH
BLDG. 1 - SUITE E130
OAKDALE, MN 55128
Phone: (651) 704-9970
Email: Oakdale@bolton-menk.com
www.bolton-menk.com

Cottage Grove
Where Pride and Prosperity Meet

| DESIGNED | ANO |
|---|---|
| DRAWN | BNM |
| CHECKED | MJB |
| CLIENT PROJ. NO. | 137045 |

| NO. | ISSUED FOR | DATE |
|---|---|---|

CITY OF COTTAGE GROVE
2026 PAVEMENT MANAGEMENT PROJECT
STREET SIGNAGE PLAN

SHEET C7.04

LEGEND

1. MOUNT SIGN/SIGNS ON STREET LIGHT POLE
2. SALVAGE AND REINSTALL NAME PLATE ON NEW POLE
3. REMOVE AND REPLACE SIGN ON NEW POLE
4. REMOVE EXISTING SIGN AND POLE
5. INSTALL NEW SIGN

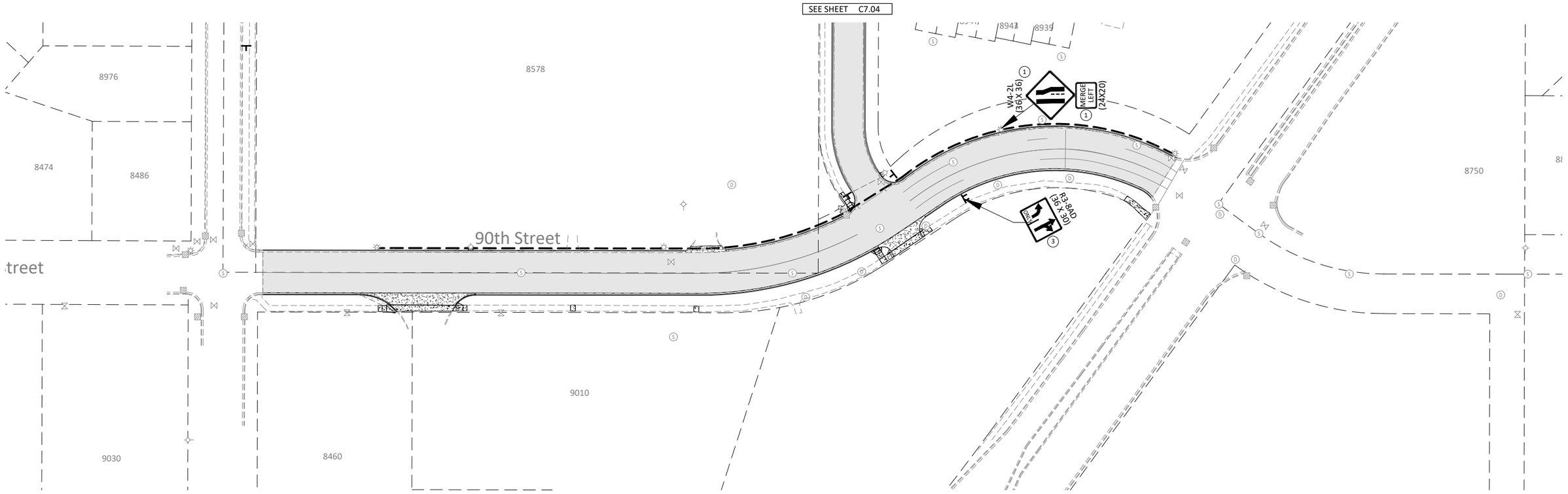


HORZ. SCALE 0 50 100 FEET

I HEREBY CERTIFY THAT THIS PLAN, SPECIFICATION, OR REPORT WAS PREPARED BY ME OR UNDER MY DIRECT SUPERVISION AND THAT I AM A DULY LICENSED PROFESSIONAL ENGINEER UNDER THE LAWS OF THE STATE OF MINNESOTA.

MICHAEL J BOEX
LIC. NO. 44576 DATE MM/DD/YYYY


BOLTON & MENK
3507 HIGH POINT DRIVE NORTH
BLDG. 1 - SUITE E130
OAKDALE, MN 55128
Phone: (651) 704-9970
Email: Oakdale@bolton-menk.com
www.bolton-menk.com


Cottage Grove — Where Pride and Prosperity Meet

| | |
|---|---|
| DESIGNED | ANO |
| DRAWN | BNM |
| CHECKED | MJB |
| CLIENT PROJ. NO. | 137045 |

| NO. | ISSUED FOR | DATE |
|---|---|---|
| | | |

CITY OF COTTAGE GROVE
2026 PAVEMENT MANAGEMENT PROJECT
STREET SIGNAGE PLAN

SHEET C7.05


©Bolton & Menk, Inc. 2026. All Rights Reserved
H:\CO\TT\24X1\37045000\CAD\C3D\137045C702.dwg 2/25/2026 6:38:23 AM

## SYMBOLS & MATERIALS LEGEND

STRIPING KEY

- CIRCLE - MULTI COMP
- PAVEMENT MESSAGE (TYP) GROUND IN

| 1ST DIGIT WIDTH | 2ND DIGIT PATTERN | 3RD DIGIT COLOR |
|---|---|---|
| 4", 8", ETC. | S - SOLID<br>B - BROKEN<br>D - DOTTED/DOUBLE | W - WHITE<br>Y - YELLOW<br>B - BLACK |

EXAMPLE: 4SW G = 4" SOLID LINE WHITE - MULTI COMP GROUND IN

Ironwood Ave

Isle Ave

Isle Ave

Ira Ave

Irish Ave Court

88th Street

PAVEMENT MESSAGE SPECIAL "SLOW SCHOOL XING" HEIGHT = 6 FT SPACING = 45 FT

PAVEMENT MESSAGE SPECIAL "SLOW SCHOOL XING" HEIGHT = 6 FT SPACING = 45 FT

PAVEMENT MESSAGE SPECIAL "SLOW SCHOOL XING" HEIGHT = 6 FT SPACING = 45 FT

12SW G

24SW G

4DY G

150'

©Bolton & Menk, Inc. 2026. All Rights Reserved
H:\COTT\24X\137045000\CAD\C3D\137045C705.dwg 2/25/2026 6:34:46 AM

HORZ. SCALE 0 50 100 FEET

I HEREBY CERTIFY THAT THIS PLAN, SPECIFICATION, OR REPORT WAS PREPARED BY ME OR UNDER MY DIRECT SUPERVISION AND THAT I AM A DULY LICENSED PROFESSIONAL ENGINEER UNDER THE LAWS OF THE STATE OF MINNESOTA.

MICHAEL J BOEX
LIC. NO. 44576 DATE MM/DD/YYYY

BOLTON & MENK
3507 HIGH POINT DRIVE NORTH
BLDG. 1 - SUITE E130
OAKDALE, MN 55128
Phone: (651) 704-9970
Email: Oakdale@bolton-menk.com
www.bolton-menk.com

Cottage Grove
Where Pride and Prosperity Meet

| | |
|---|---|
| DESIGNED | ANO |
| DRAWN | BNM |
| CHECKED | MJB |
| CLIENT PROJ. NO. | 137045 |

| NO. | ISSUED FOR | DATE |
|---|---|---|

CITY OF COTTAGE GROVE
2026 PAVEMENT MANAGEMENT PROJECT
STREET STRIPING PLAN

SHEET C7.06

SYMBOLS & MATERIALS LEGEND

STRIPING KEY

CIRCLE - MULTI COMP

PAVEMENT MESSAGE (TYP)
GROUND IN

| 1ST DIGIT WIDTH | 2ND DIGIT PATTERN | 3RD DIGIT COLOR |
|---|---|---|
| 4", 8", ETC. | S - SOLID | W - WHITE |
| | B - BROKEN | Y - YELLOW |
| | D - DOTTED/DOUBLE | B - BLACK |

EXAMPLE: 4SW G = 4" SOLID LINE WHITE - MULTI COMP GROUND IN

Isle Ave

Ivan Ave

Hillside Trail

Ivywood Ave

Janero Ct

4DY G

4SW G

24SW G

PAVEMENT MESSAGE SPECIAL
"SLOW SCHOOL XING"
HEIGHT = 6 FT
SPACING = 45 FT

150'

12'

6'

8729 8801 8811 8821 8831 8841 8851 8592 8583 8596 8595 8593 8606 8605 8616 8615 8625 8655 8661 8667 8673 8626 8637 8647 8657 8642 8658 8679 8672 8680 8688 8648 8700 8685 8674 8693 8690 8703 8706 8716 8719 8722 8740 8735 8678 8692 8707 8717 8727 8800 8804 8816 8697 8701 8726 8646 8656 8667 8676 8686 8696 8716 8726 8645 8655 8665 8685 8695 8705 8715 8725 8959 8724 8734 8737

HORZ. 0 50 100 SCALE FEET

I HEREBY CERTIFY THAT THIS PLAN, SPECIFICATION, OR REPORT WAS PREPARED BY ME OR UNDER MY DIRECT SUPERVISION AND THAT I AM A DULY LICENSED PROFESSIONAL ENGINEER UNDER THE LAWS OF THE STATE OF MINNESOTA.

MICHAEL J BOEX
LIC. NO. 44576 DATE MM/DD/YYYY

BOLTON & MENK

3507 HIGH POINT DRIVE NORTH
BLDG. 1 - SUITE E130
OAKDALE, MN 55128
Phone: (651) 704-9970
Email: Oakdale@bolton-menk.com
www.bolton-menk.com

Cottage Grove
Where Pride and Prosperity Meet

| | |
|---|---|
| DESIGNED | ANO |
| DRAWN | BNM |
| CHECKED | MJB |
| CLIENT PROJ. NO. | 137045 |

| NO. | ISSUED FOR | DATE |
|---|---|---|
| | | |

CITY OF COTTAGE GROVE
2026 PAVEMENT MANAGEMENT PROJECT
STREET STRIPING PLAN

SHEET C7.07

©Bolton & Menk, Inc. 2026. All Rights Reserved
H:\COTT\24X\137045000\CAD\C3D\137045C705.dwg 2/25/2026 6:53:09 AM

## SYMBOLS & MATERIALS LEGEND

STRIPING KEY

CIRCLE - MULTI COMP

PAVEMENT MESSAGE (TYP)
GROUND IN

| 1ST DIGIT WIDTH | 2ND DIGIT PATTERN | 3RD DIGIT COLOR |
|---|---|---|
| 4", 8", ETC. | S - SOLID | W - WHITE |
| | B - BROKEN | Y - YELLOW |
| | D - DOTTED/DOUBLE | B - BLACK |

EXAMPLE: 4SW G = 4" SOLID LINE WHITE - MULTI COMP GROUND IN

PAVEMENT MESSAGE SPECIAL
"SLOW SCHOOL XING"
HEIGHT = 6 FT
SPACING = 45 FT

150'

4DY G

4BW G

11'

Inwood Ave

Ironwood Ave

90th Street

Street

8892 8908 8924 8940 8958 8976 8474 8486 8578 9010 8750

8893 8895 8897 8899 8901 8903 8905 8907 8909 8911 8913 8915 8917 8919 8921 8923 8925 8927 8929 8931 8933 8935 8937 8939 8941 8943 8945 8947 8949 8951 8833 8835 8837 8839 8841 8843 8845 8847 8849 8851 8853 8855 8857 8859 8861 8863 8817 8819 8821 8823 8825 8827 8829 8831

HORZ. 0 50 100 SCALE FEET

I HEREBY CERTIFY THAT THIS PLAN, SPECIFICATION, OR REPORT WAS PREPARED BY ME OR UNDER MY DIRECT SUPERVISION AND THAT I AM A DULY LICENSED PROFESSIONAL ENGINEER UNDER THE LAWS OF THE STATE OF MINNESOTA.

MICHAEL J BOEX
LIC. NO. 44576 DATE MM/DD/YYYY

BOLTON & MENK

3507 HIGH POINT DRIVE NORTH
BLDG. 1 - SUITE E130
OAKDALE, MN 55128
Phone: (651) 704-9970
Email: Oakdale@bolton-menk.com
www.bolton-menk.com

Cottage Grove
Where Pride and Prosperity Meet

| | |
|---|---|
| DESIGNED | ANO |
| DRAWN | BNM |
| CHECKED | MJB |
| CLIENT PROJ. NO. | 137045 |

| NO. | ISSUED FOR | DATE |
|---|---|---|
| | | |

CITY OF COTTAGE GROVE
2026 PAVEMENT MANAGEMENT PROJECT
STREET STRIPING PLAN

SHEET C7.08

©Bolton & Menk, Inc. 2026. All Rights Reserved
H:\COTT\24X\137045000\CAD\C3D\137045C705.dwg 2/25/2026 6:32:06 AM

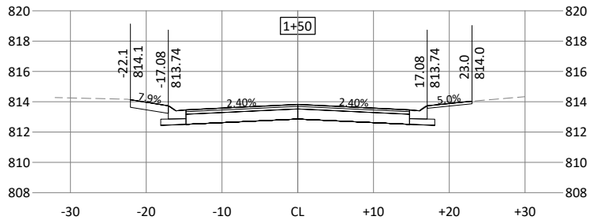


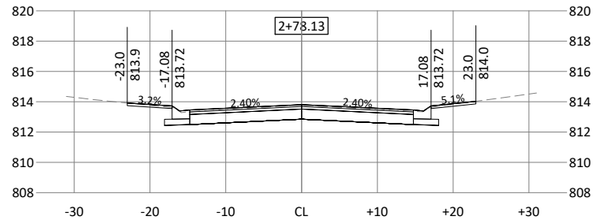


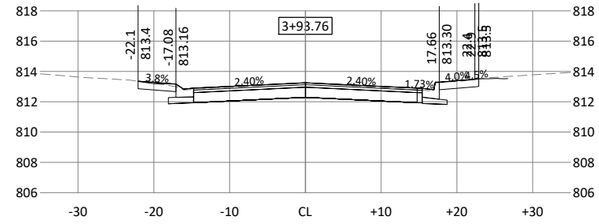


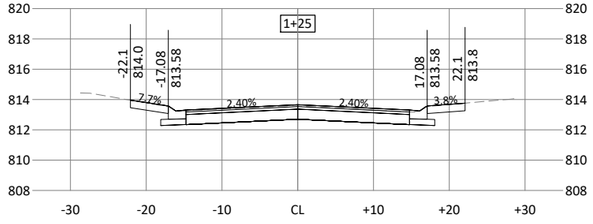


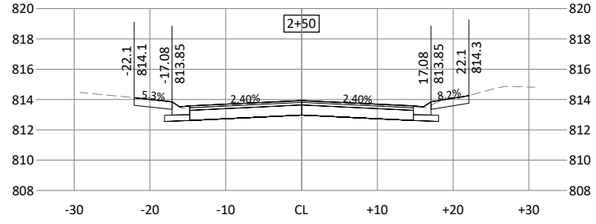


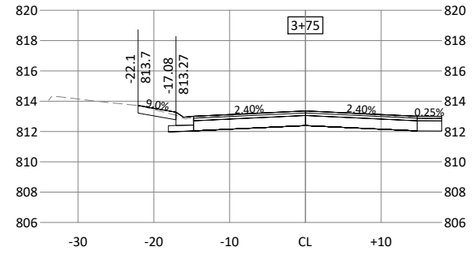


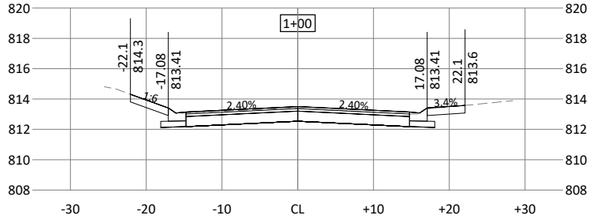


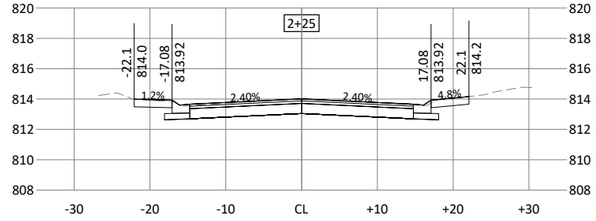


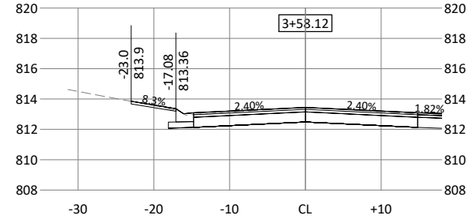


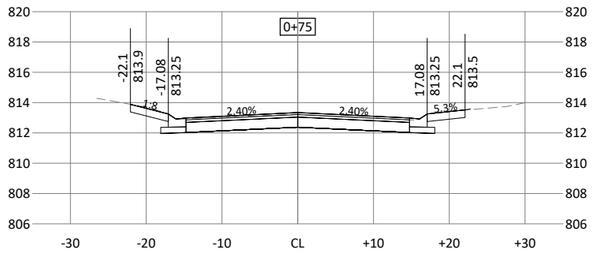


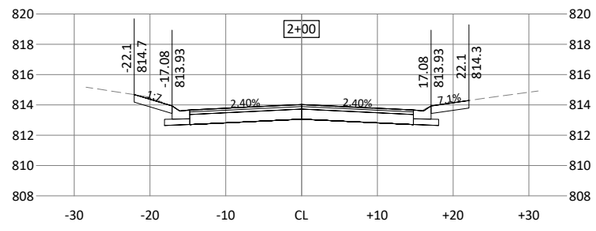


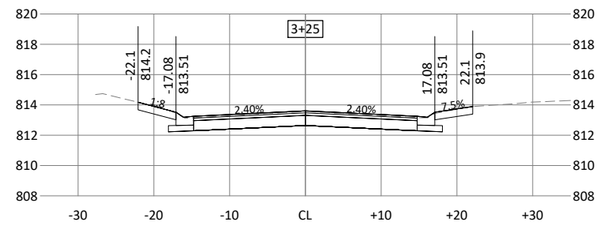


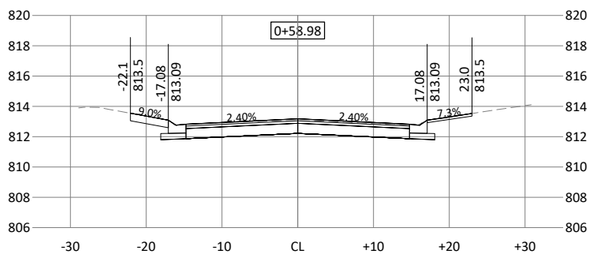


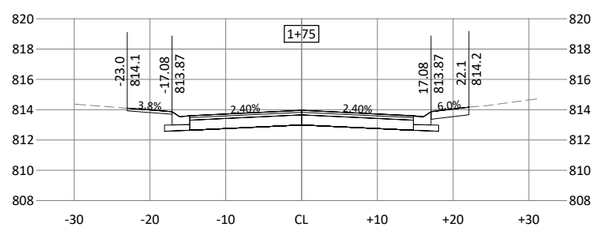


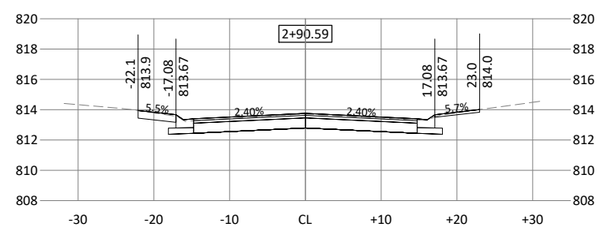


©Bolton & Menk, Inc. 2026. All Rights Reserved
H:\COTT\24X\137045000\CAD\C3D\137045C801.dwg 2/25/2026 6:54:53 AM

HORZ. 0 10 20 SCALE FEET

VERT. 0 5 10 SCALE FEET

I HEREBY CERTIFY THAT THIS PLAN, SPECIFICATION, OR REPORT WAS PREPARED BY ME OR UNDER MY DIRECT SUPERVISION AND THAT I AM A DULY LICENSED PROFESSIONAL ENGINEER UNDER THE LAWS OF THE STATE OF MINNESOTA.

MICHAEL J BOEK

LIC. NO. 44576 DATE MM/DD/YYYY

BOLTON & MENK
3507 HIGH POINT DRIVE NORTH
BLDG. 1 - SUITE E130
OAKDALE, MN 55128
Phone: (651) 704-9970
Email: Oakdale@bolton-menk.com
www.bolton-menk.com

Cottage Grove
Where Pride and Prosperity Meet

| | |
|---|---|
| DESIGNED | ANO |
| DRAWN | BNM |
| CHECKED | MJB |
| CLIENT PROJ. NO. | 137045 |

| NO. | ISSUED FOR | DATE |
|---|---|---|
| | | |

CITY OF COTTAGE GROVE

2026 PAVEMENT MANAGEMENT PROJECT

CROSS SECTIONS - IRONWOOD AVE (NORTH)

SHEET C8.01

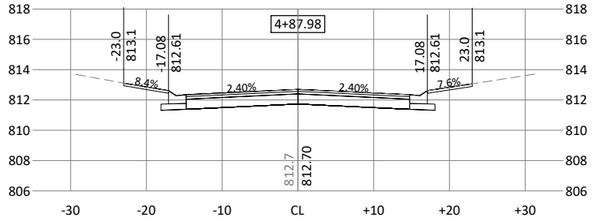


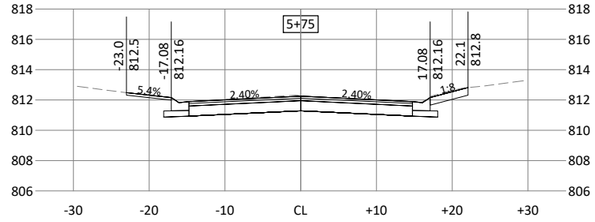


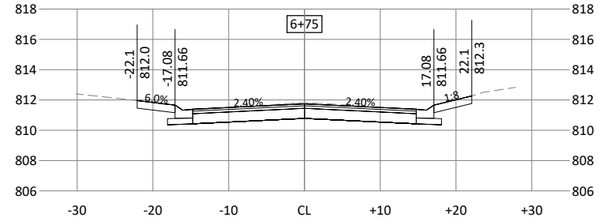


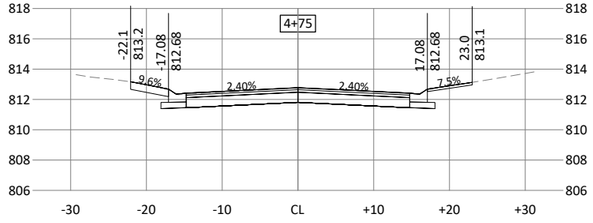


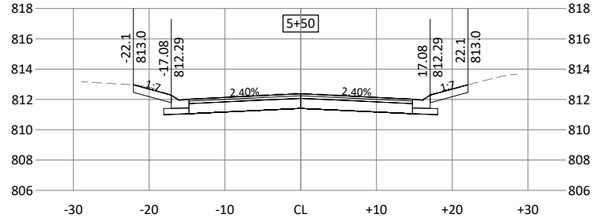


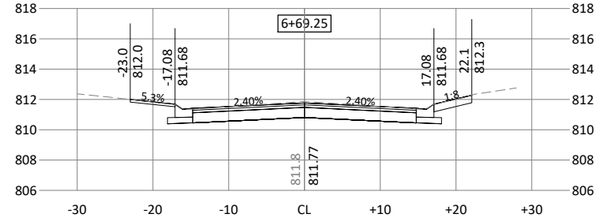


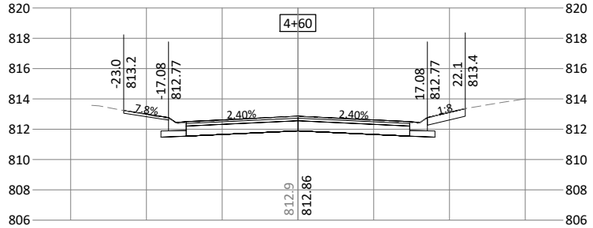


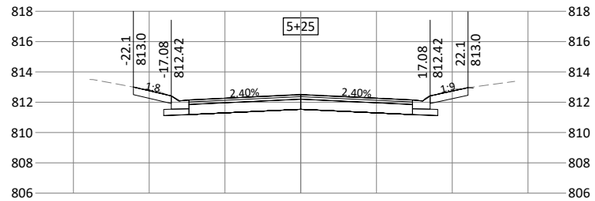


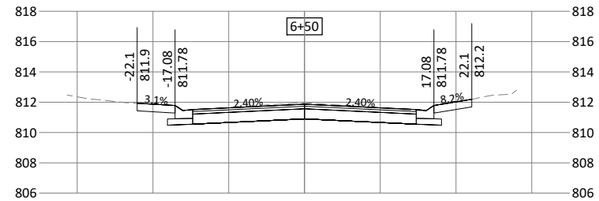


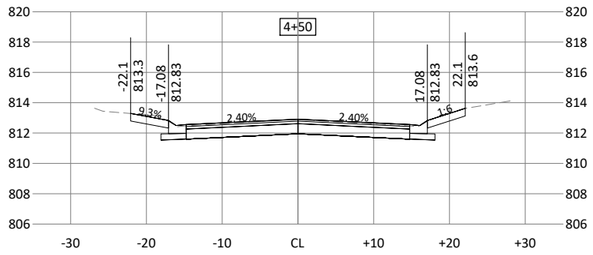


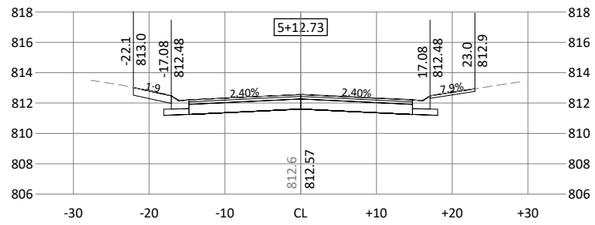


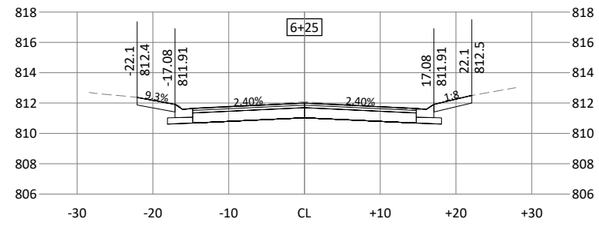


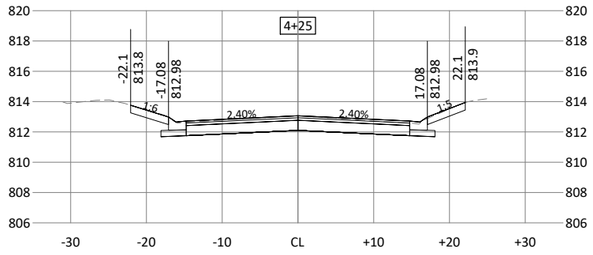


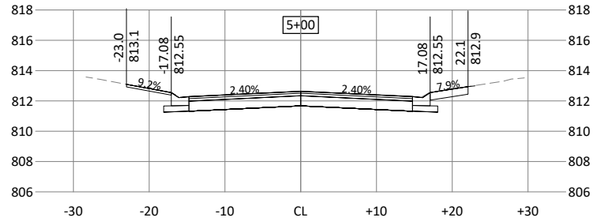


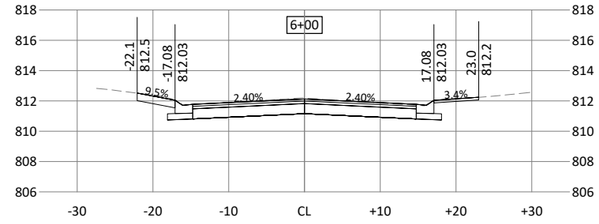


©Bolton & Menk, Inc. 2026, All Rights Reserved
H:\COTT\24X\137045000\CAD\C3D\137045C801.dwg 2/25/2026 6:53:49 AM

HORZ. 0 10 20 SCALE FEET

VERT. 0 5 10 SCALE FEET

I HEREBY CERTIFY THAT THIS PLAN, SPECIFICATION, OR REPORT WAS PREPARED BY ME OR UNDER MY DIRECT SUPERVISION AND THAT I AM A DULY LICENSED PROFESSIONAL ENGINEER UNDER THE LAWS OF THE STATE OF MINNESOTA.

MICHAEL J BOEK
LIC. NO. 44576 DATE MM/DD/YYYY

BOLTON & MENK
3507 HIGH POINT DRIVE NORTH
BLDG. 1 - SUITE E130
OAKDALE, MN 55128
Phone: (651) 704-9970
Email: Oakdale@bolton-menk.com
www.bolton-menk.com

Cottage Grove
Where Pride and Prosperity Meet

| DESIGNED | ANO |
|---|---|
| DRAWN | BNM |
| CHECKED | MJB |
| CLIENT PROJ. NO. | 137045 |

| NO. | ISSUED FOR | DATE |
|---|---|---|

CITY OF COTTAGE GROVE
2026 PAVEMENT MANAGEMENT PROJECT
CROSS SECTIONS - IRONWOOD AVE (NORTH)

SHEET C8.02

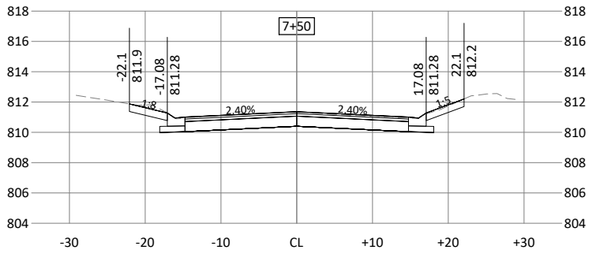


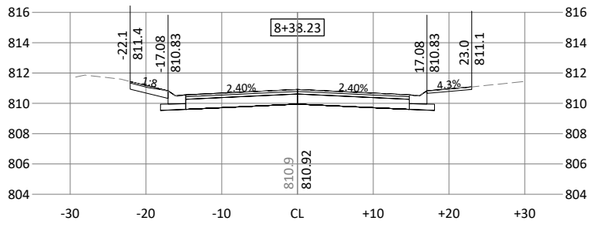


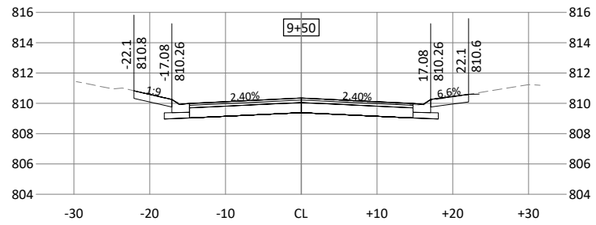


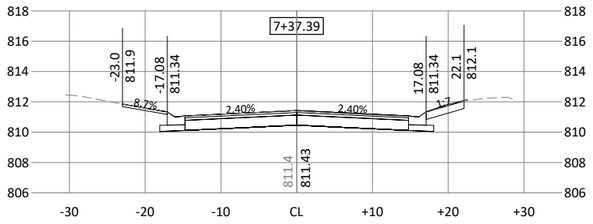


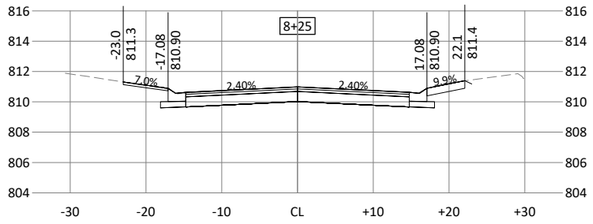


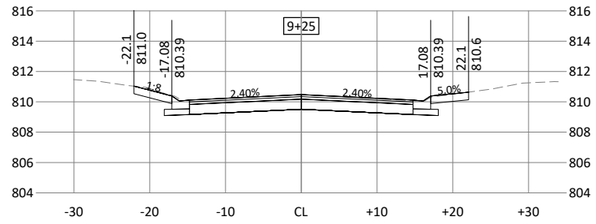


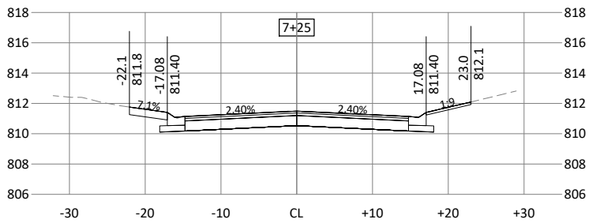


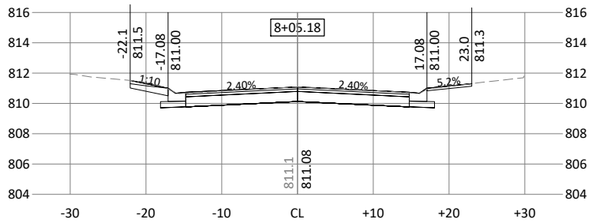


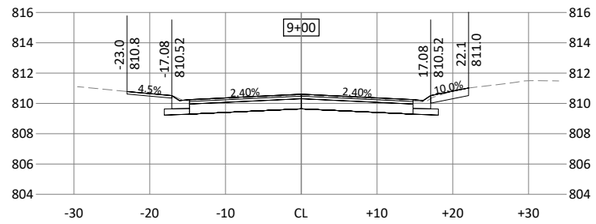


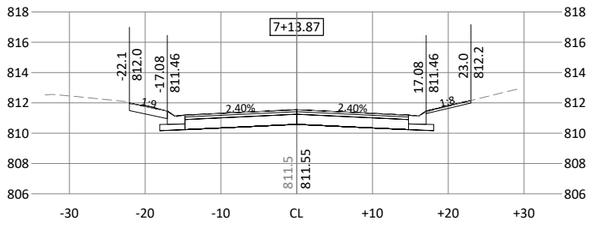


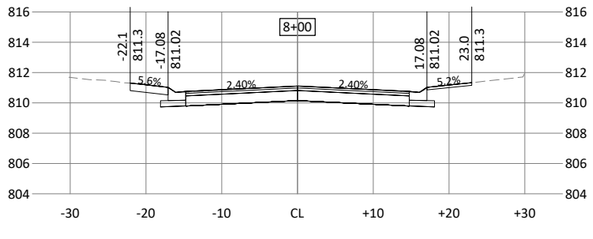


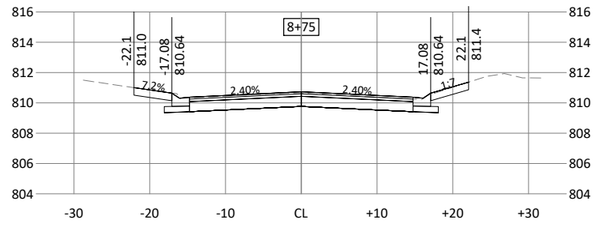


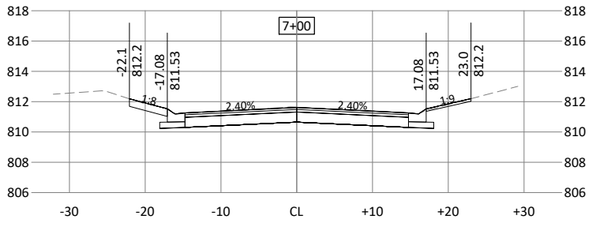


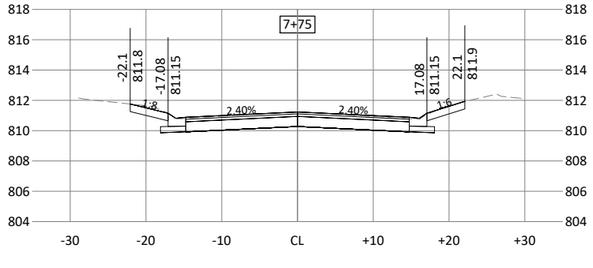


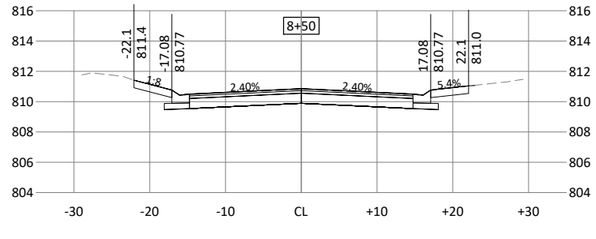


©Bolton & Menk, Inc. 2026. All Rights Reserved
H:\COTT\24x137045000\CAD\C3D\137045C801.dwg 2/25/2026 7:03:24 AM

HORZ. 0 10 20 SCALE FEET

VERT. 0 5 10 SCALE FEET

I HEREBY CERTIFY THAT THIS PLAN, SPECIFICATION, OR REPORT WAS PREPARED BY ME OR UNDER MY DIRECT SUPERVISION AND THAT I AM A DULY LICENSED PROFESSIONAL ENGINEER UNDER THE LAWS OF THE STATE OF MINNESOTA.

MICHAEL J BOEX
LIC. NO. 44576 DATE MM/DD/YYYY

BOLTON & MENK
3507 HIGH POINT DRIVE NORTH
BLDG. 1 - SUITE E130
OAKDALE, MN 55128
Phone: (651) 704-9970
Email: Oakdale@bolton-menk.com
www.bolton-menk.com

Cottage Grove
Where Pride and Prosperity Meet

| | |
|---|---|
| DESIGNED | ANO |
| DRAWN | BNM |
| CHECKED | MJB |
| CLIENT PROJ. NO. | 137045 |

| NO. | ISSUED FOR | DATE |
|---|---|---|
| | | |

CITY OF COTTAGE GROVE
2026 PAVEMENT MANAGEMENT PROJECT
CROSS SECTIONS - IRONWOOD AVE (NORTH)

SHEET C8.03

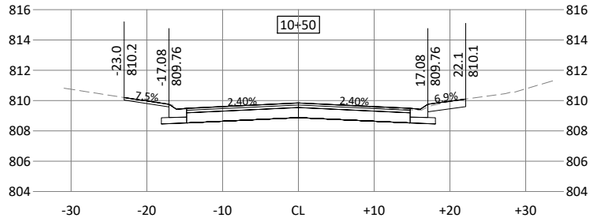


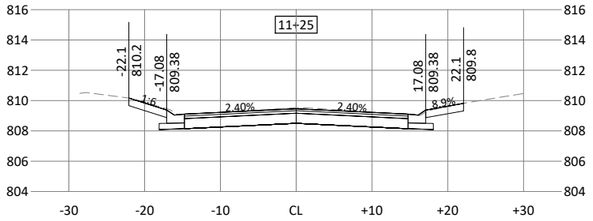


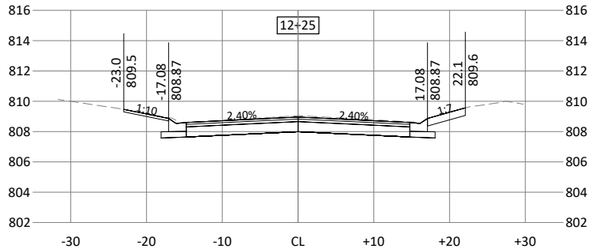


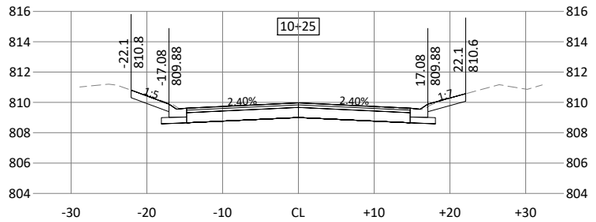


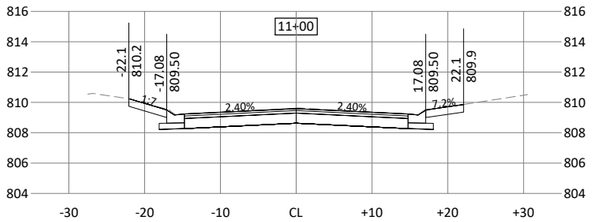


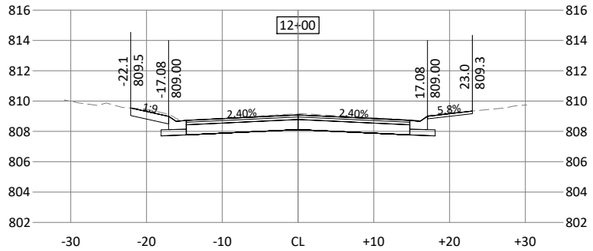


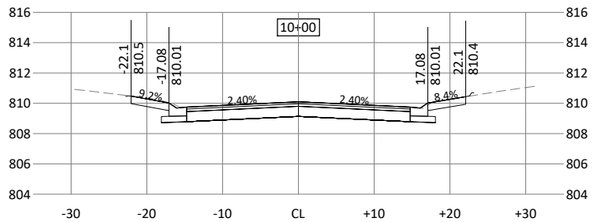


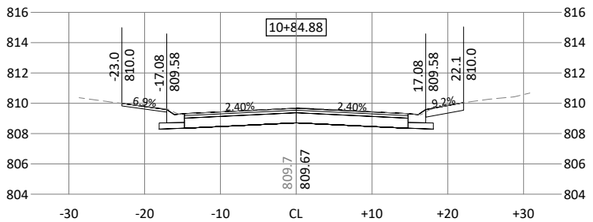


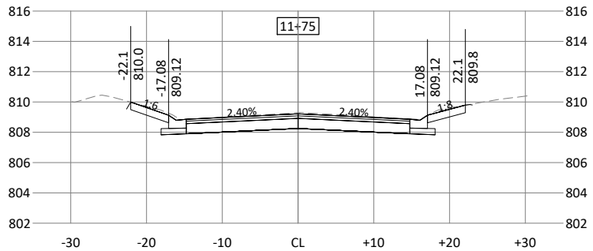


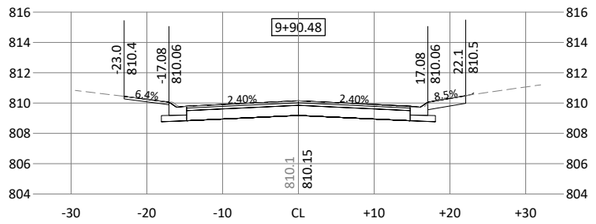


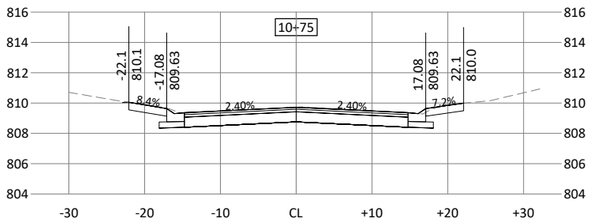


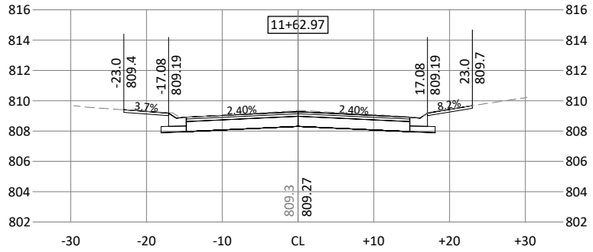


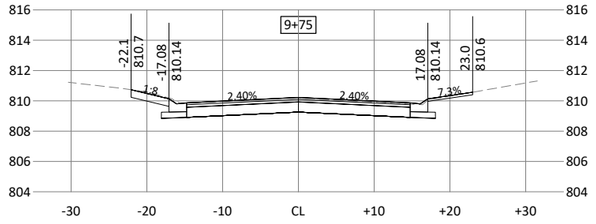


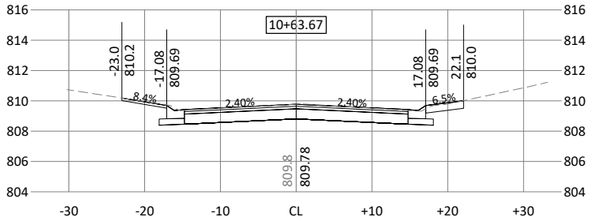


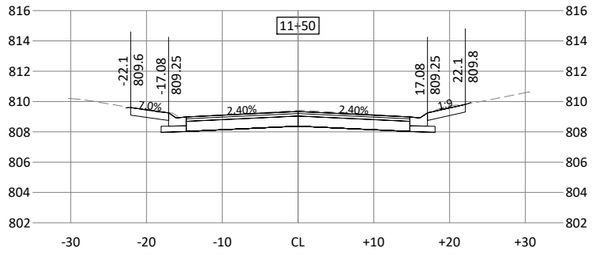


©Bolton & Menk, Inc. 2026. All Rights Reserved
H:\COTT\24X\137045000\CAD\C3D\137045C801.dwg 2/25/2026 6:32:54 AM

HORZ. SCALE 0 10 20 FEET

VERT. SCALE 0 5 10 FEET

I HEREBY CERTIFY THAT THIS PLAN, SPECIFICATION, OR REPORT WAS PREPARED BY ME OR UNDER MY DIRECT SUPERVISION AND THAT I AM A DULY LICENSED PROFESSIONAL ENGINEER UNDER THE LAWS OF THE STATE OF MINNESOTA.

MICHAEL J BOEX
LIC. NO. 44576 DATE MM/DD/YYYY

BOLTON & MENK
3507 HIGH POINT DRIVE NORTH
BLDG. 1 - SUITE E130
OAKDALE, MN 55128
Phone: (651) 704-9970
Email: Oakdale@bolton-menk.com
www.bolton-menk.com

Cottage Grove
Where Pride and Prosperity Meet

| DESIGNED | ANO |
|---|---|
| DRAWN | BNM |
| CHECKED | MJB |
| CLIENT PROJ. NO. | 137045 |

| NO. | ISSUED FOR | DATE |
|---|---|---|

CITY OF COTTAGE GROVE
2026 PAVEMENT MANAGEMENT PROJECT
CROSS SECTIONS - IRONWOOD AVE (NORTH)

SHEET C8.04

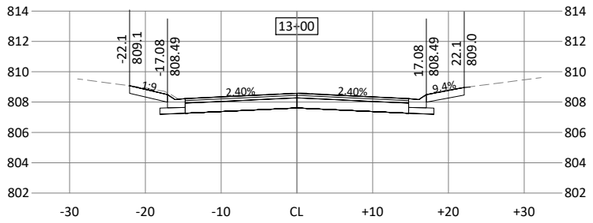


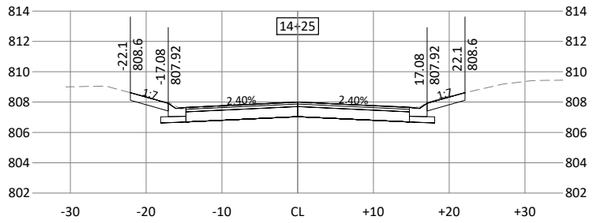


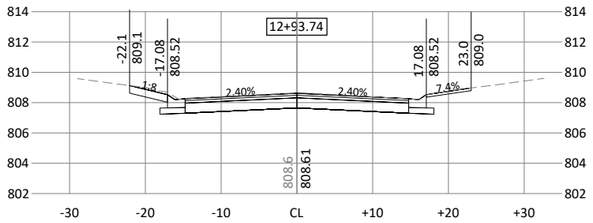


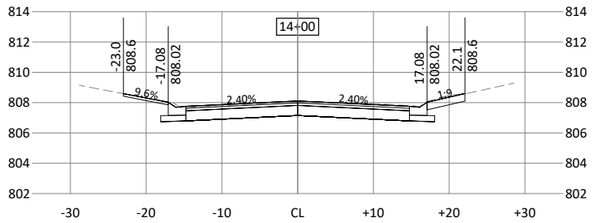


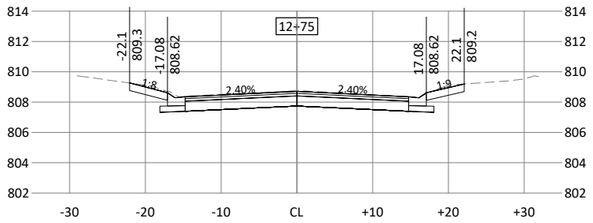


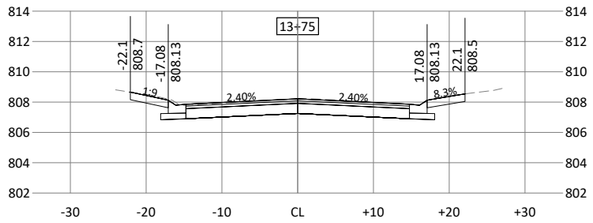


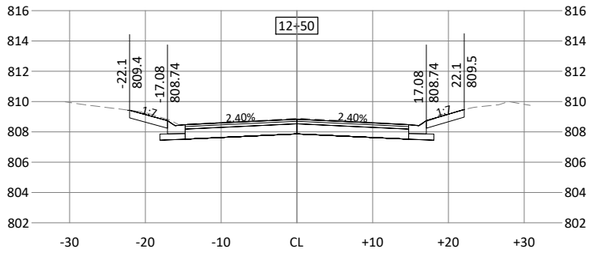


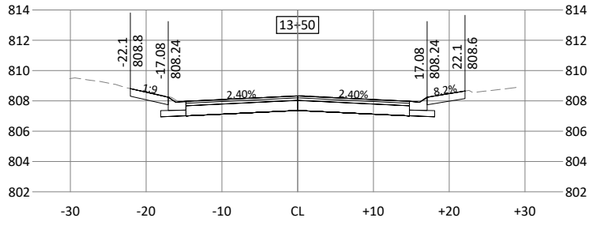


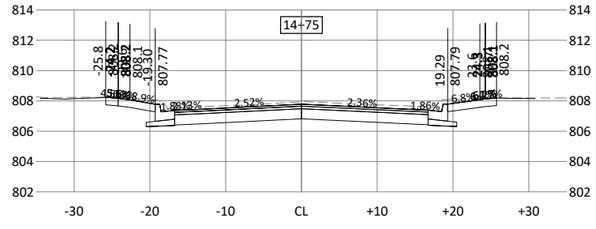


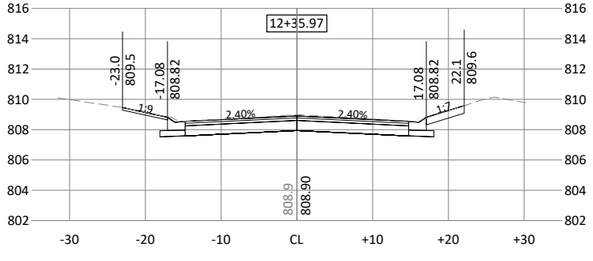


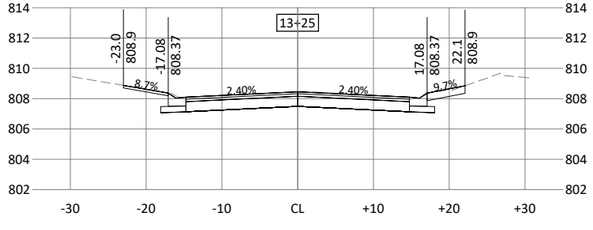


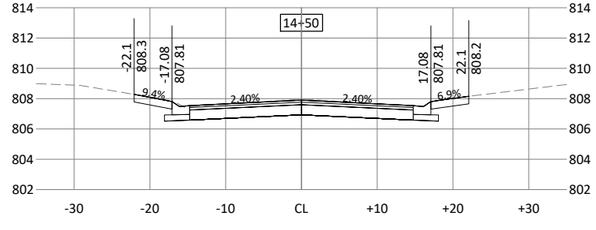


©Bolton & Menk, Inc. 2026. All Rights Reserved
H:\COTT\24X\1704500\CAD\C3D\137045C801.dwg 2/25/2026 6:57:42 AM

HORZ. 0 10 20 SCALE FEET

VERT. 0 5 10 SCALE FEET

I HEREBY CERTIFY THAT THIS PLAN, SPECIFICATION, OR REPORT WAS PREPARED BY ME OR UNDER MY DIRECT SUPERVISION AND THAT I AM A DULY LICENSED PROFESSIONAL ENGINEER UNDER THE LAWS OF THE STATE OF MINNESOTA.

MICHAEL J BOEX
LIC. NO. 44576 DATE MM/DD/YYYY

BOLTON & MENK
3507 HIGH POINT DRIVE NORTH
BLDG. 1 - SUITE E130
OAKDALE, MN 55128
Phone: (651) 704-9970
Email: Oakdale@bolton-menk.com
www.bolton-menk.com

Cottage Grove
Where Pride and Prosperity Meet

| DESIGNED | NO. | ISSUED FOR | DATE |
|---|---|---|---|
| ANO | | | |
| DRAWN | | | |
| BNM | | | |
| CHECKED | | | |
| MJB | | | |
| CLIENT PROJ. NO. | | | |
| 137045 | | | |

CITY OF COTTAGE GROVE
2026 PAVEMENT MANAGEMENT PROJECT
CROSS SECTIONS - IRONWOOD AVE (NORTH)

SHEET C8.05

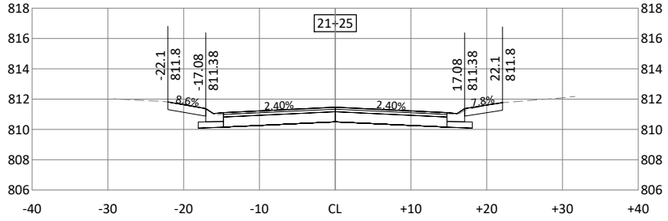


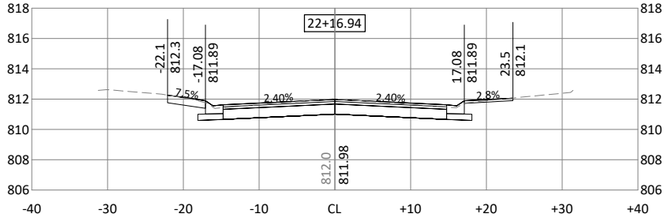


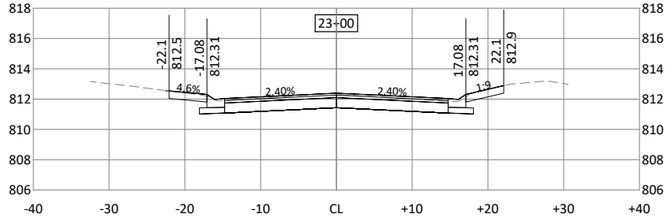


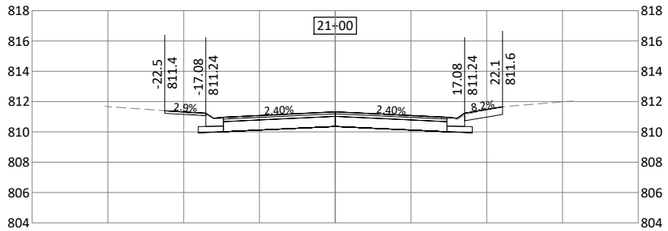


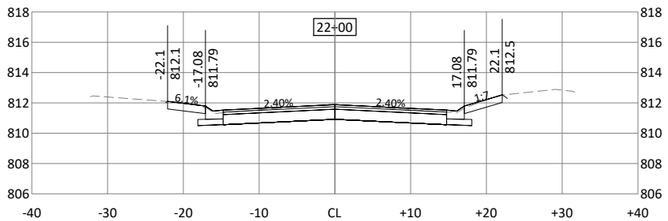


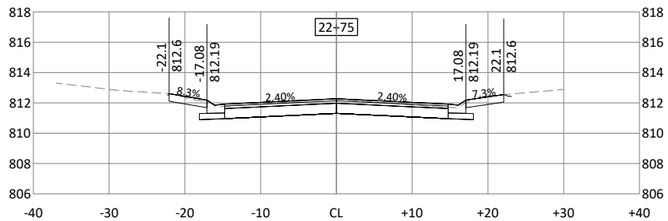


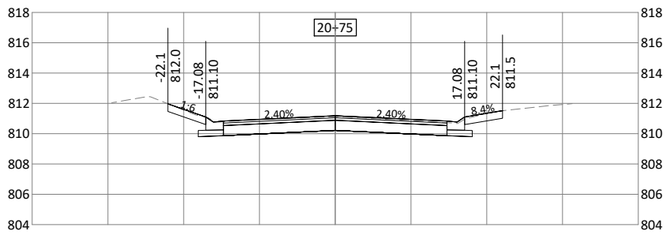


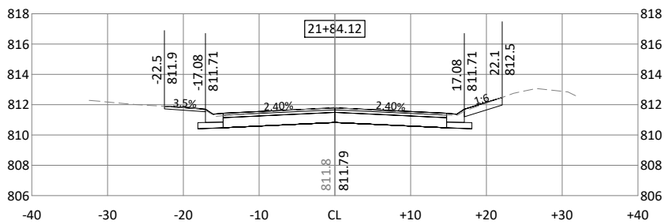


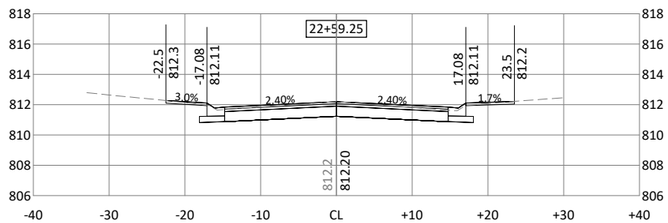


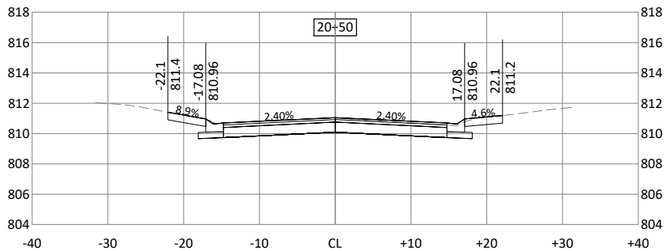


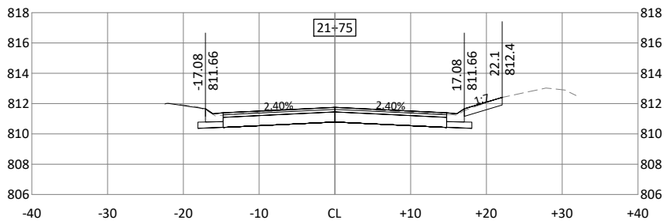


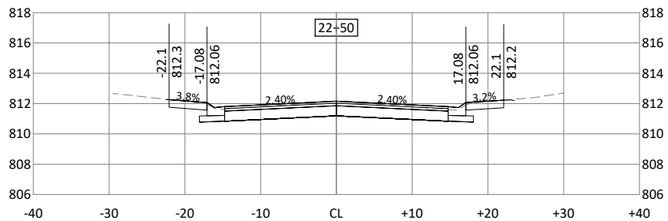


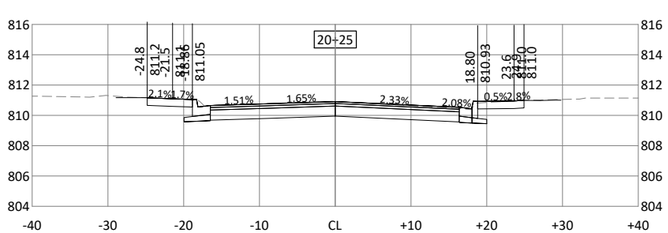


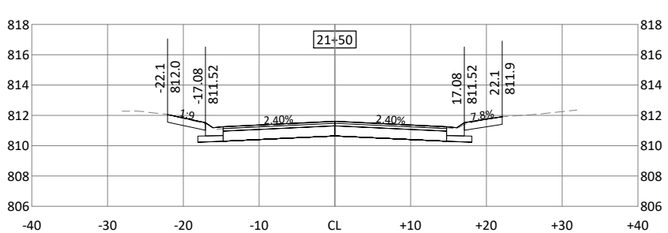


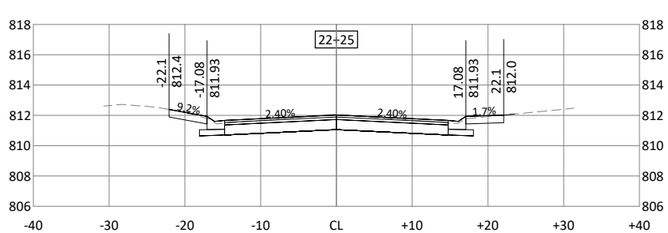


©Bolton & Menk, Inc. 2026. All Rights Reserved
H:\COTT\24X\137045000\CAD\C3D\137045C801.dwg 2/25/2026 6:39:40 AM

HORZ. SCALE 0 10 20 FEET

VERT. SCALE 0 5 10 FEET

I HEREBY CERTIFY THAT THIS PLAN, SPECIFICATION, OR REPORT WAS PREPARED BY ME OR UNDER MY DIRECT SUPERVISION AND THAT I AM A DULY LICENSED PROFESSIONAL ENGINEER UNDER THE LAWS OF THE STATE OF MINNESOTA.

MICHAEL J BOEX
LIC. NO. 44576 DATE MM/DD/YYYY

BOLTON & MENK
3507 HIGH POINT DRIVE NORTH
BLDG. 1 - SUITE E130
OAKDALE, MN 55128
Phone: (651) 704-9970
Email: Oakdale@bolton-menk.com
www.bolton-menk.com

Cottage Grove
Where Pride and Prosperity Meet

| | |
|---|---|
| DESIGNED | ANO |
| DRAWN | BNM |
| CHECKED | MJB |
| CLIENT PROJ. NO. | 137045 |

| NO. | ISSUED FOR | DATE |
|---|---|---|
| | | |

CITY OF COTTAGE GROVE
2026 PAVEMENT MANAGEMENT PROJECT
CROSS SECTIONS - IRA AVE

SHEET C8.06

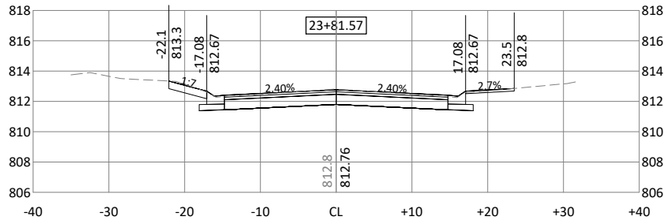


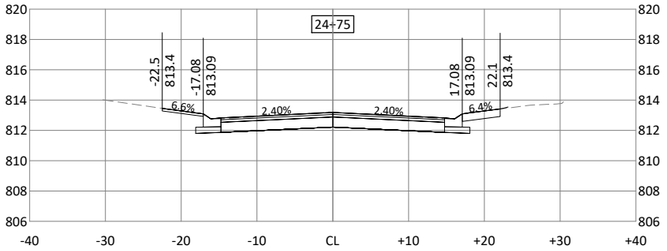


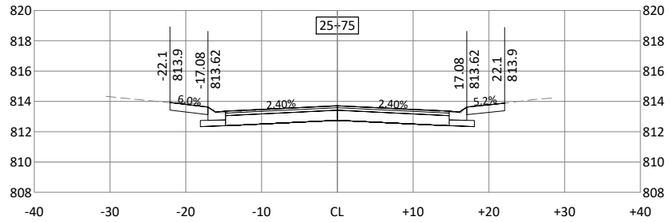


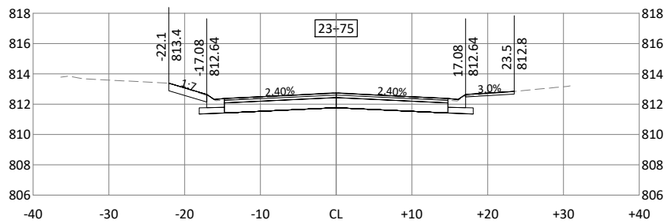


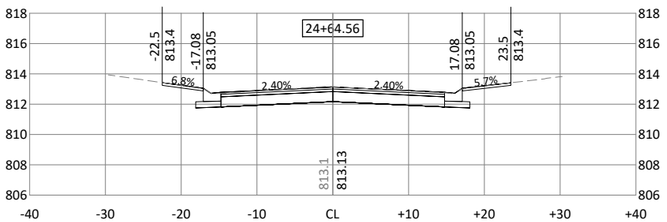


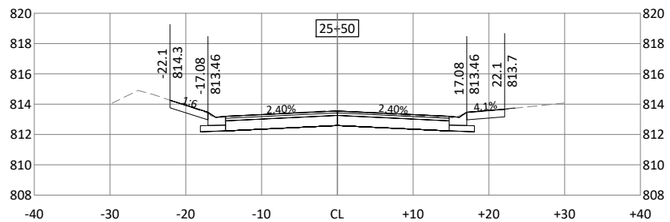


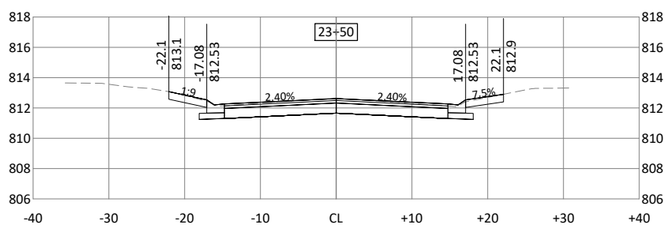


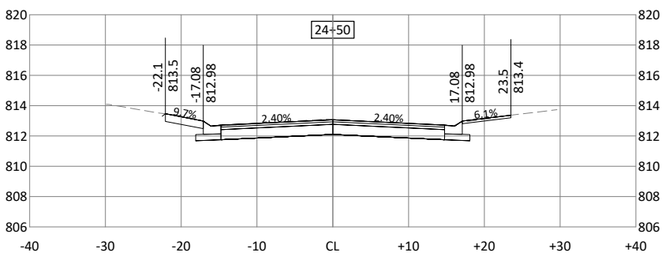


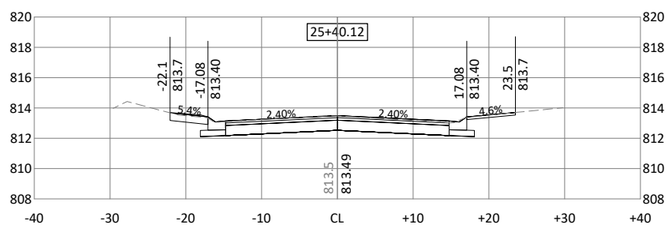


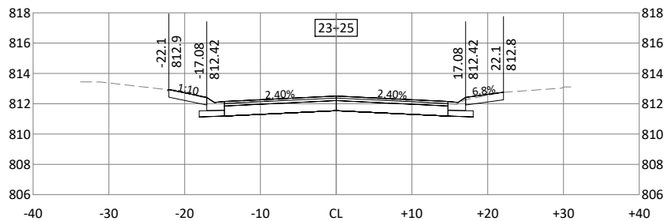


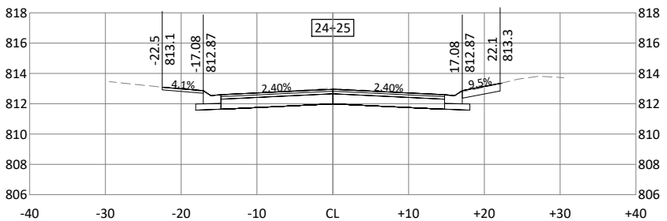


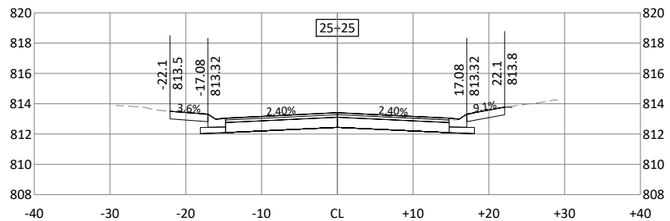


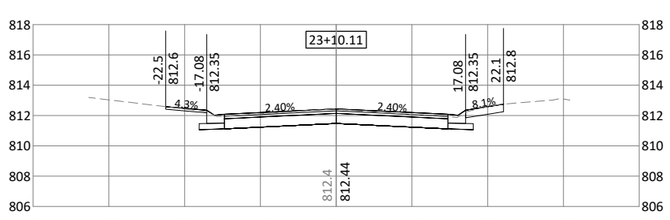


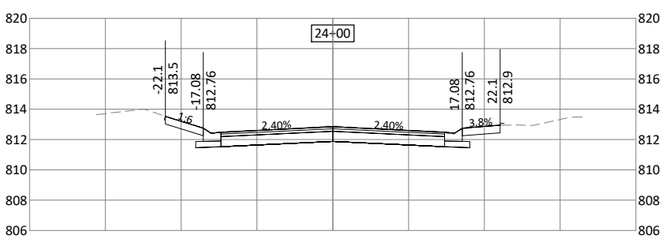


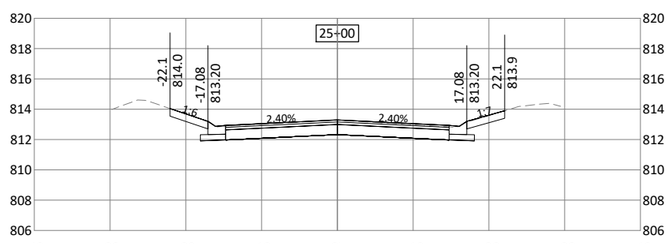


©Bolton & Menk, Inc. 2026. All Rights Reserved
H:\COTT\24X\137045000\CAD\C3D\137045C801.dwg 2/25/2026 6:36:30 AM

HORZ. 0 10 20 SCALE FEET

VERT. 0 5 10 SCALE FEET

I HEREBY CERTIFY THAT THIS PLAN, SPECIFICATION, OR REPORT WAS PREPARED BY ME OR UNDER MY DIRECT SUPERVISION AND THAT I AM A DULY LICENSED PROFESSIONAL ENGINEER UNDER THE LAWS OF THE STATE OF MINNESOTA.

MICHAEL J BOEK
LIC. NO. 44576 DATE MM/DD/YYYY

BOLTON & MENK
3507 HIGH POINT DRIVE NORTH
BLDG. 1 - SUITE E130
OAKDALE, MN 55128
Phone: (651) 704-9970
Email: Oakdale@bolton-menk.com
www.bolton-menk.com

Cottage Grove
Where Pride and Prosperity Meet

| | |
|---|---|
| DESIGNED | ANO |
| DRAWN | BNM |
| CHECKED | MJB |
| CLIENT PROJ. NO. | 137045 |

| NO. | ISSUED FOR | DATE |
|---|---|---|
| | | |

CITY OF COTTAGE GROVE
2026 PAVEMENT MANAGEMENT PROJECT
CROSS SECTIONS - IRA AVE

SHEET C8.07

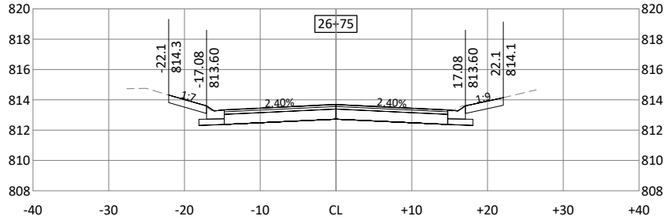


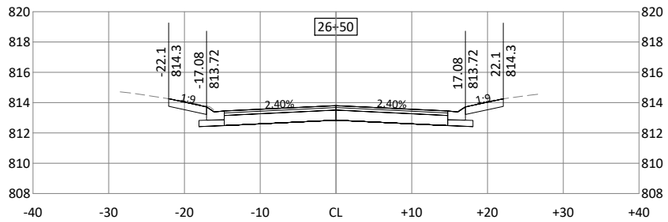


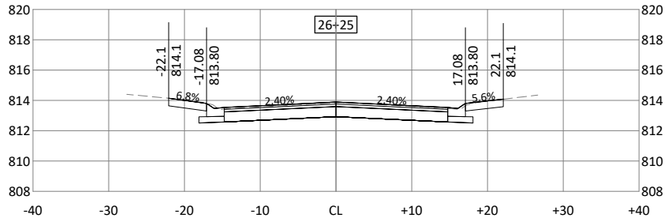


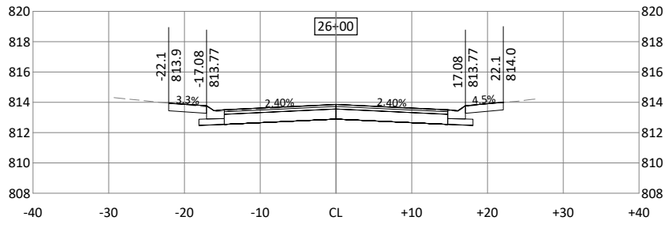


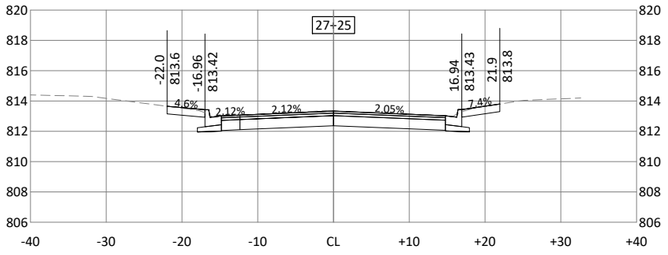


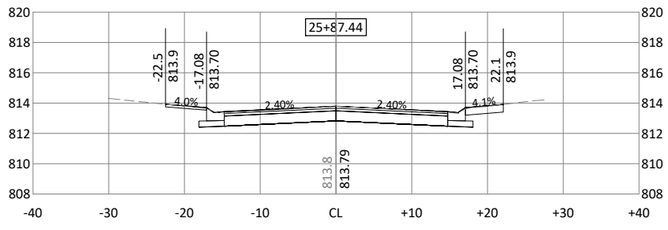


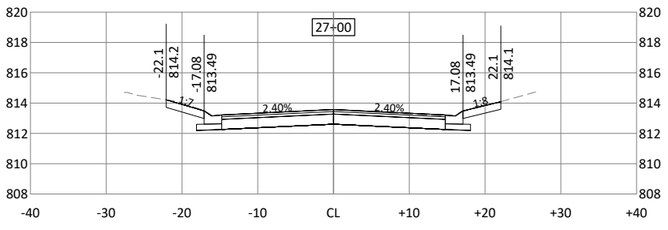


HORZ. SCALE 0 10 20 FEET

VERT. SCALE 0 5 10 FEET

I HEREBY CERTIFY THAT THIS PLAN, SPECIFICATION, OR REPORT WAS PREPARED BY ME OR UNDER MY DIRECT SUPERVISION AND THAT I AM A DULY LICENSED PROFESSIONAL ENGINEER UNDER THE LAWS OF THE STATE OF MINNESOTA.

MICHAEL J BOEX

LIC. NO. 44576 DATE MM/DD/YYYY

BOLTON & MENK

3507 HIGH POINT DRIVE NORTH
BLDG. 1 - SUITE E130
OAKDALE, MN 55128
Phone: (651) 704-9970
Email: Oakdale@bolton-menk.com
www.bolton-menk.com

Cottage Grove
Where Pride and Prosperity Meet

| DESIGNED | NO. | ISSUED FOR | DATE |
|---|---|---|---|
| ANO | | | |
| DRAWN | | | |
| BNM | | | |
| CHECKED | | | |
| MJB | | | |
| CLIENT PROJ. NO. | | | |
| 137045 | | | |

CITY OF COTTAGE GROVE

2026 PAVEMENT MANAGEMENT PROJECT

CROSS SECTIONS - IRA AVE

SHEET C8.08

©Bolton & Menk, Inc. 2026. All Rights Reserved
H:\COTT\24137045000\CAD\C3D\137045C801.dwg 2/25/2026 6:57:33 AM

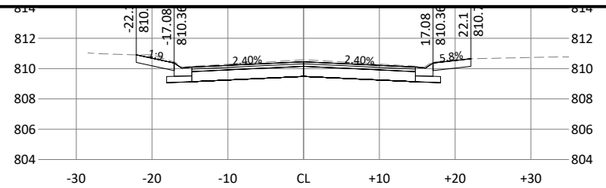


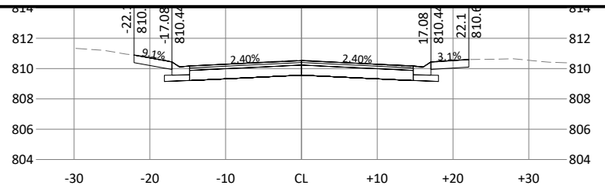


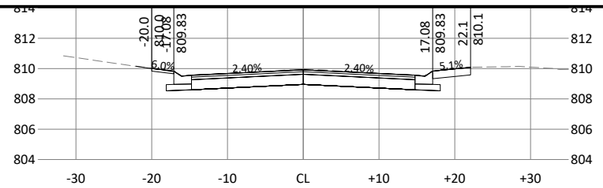


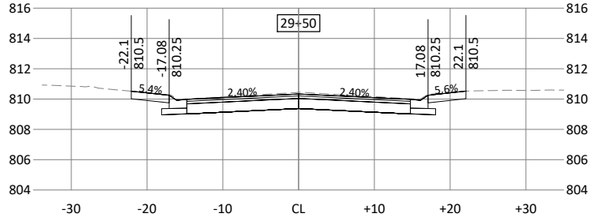


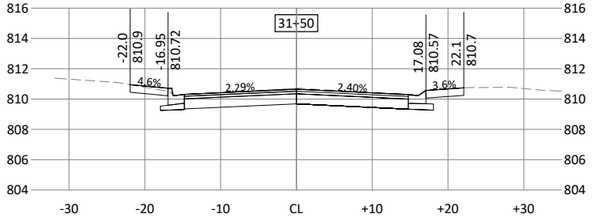


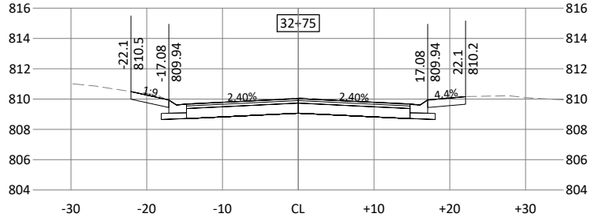


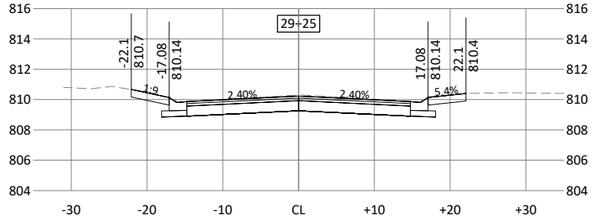


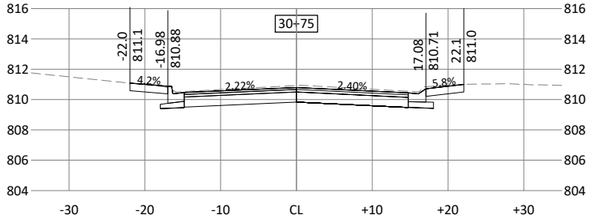


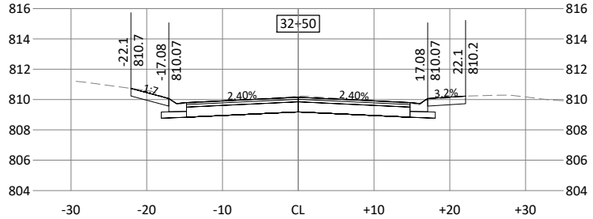


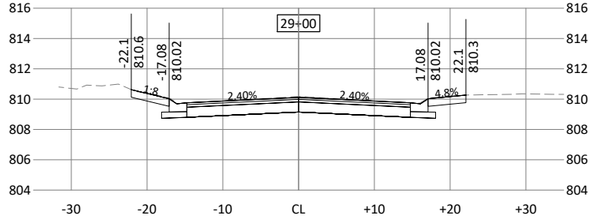


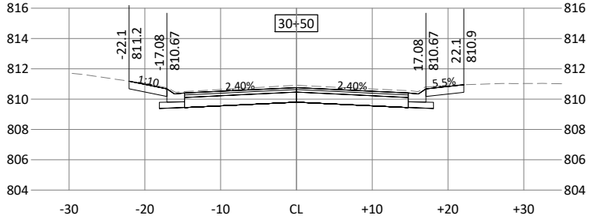


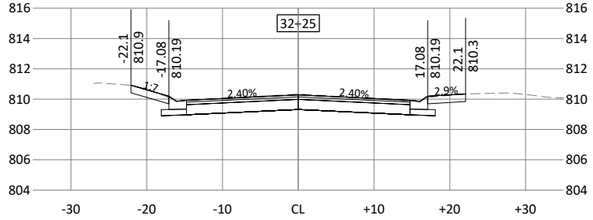


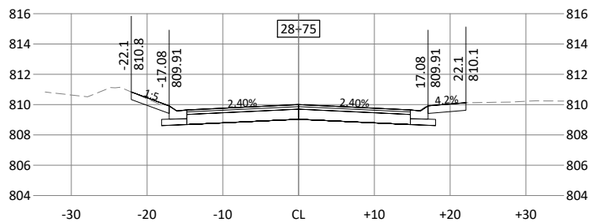


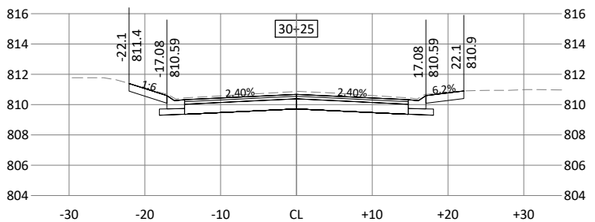


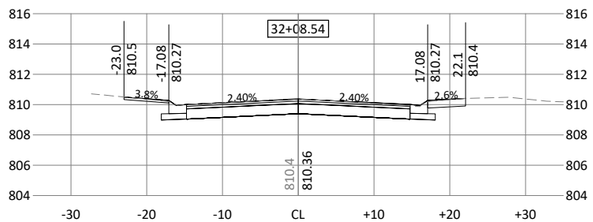


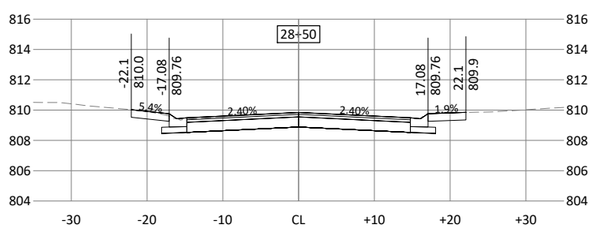


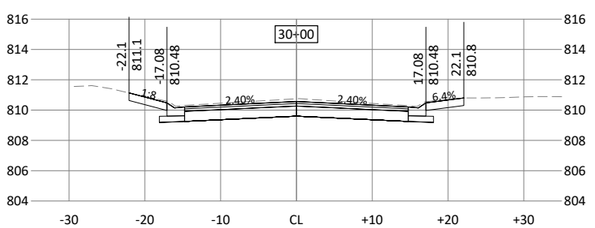


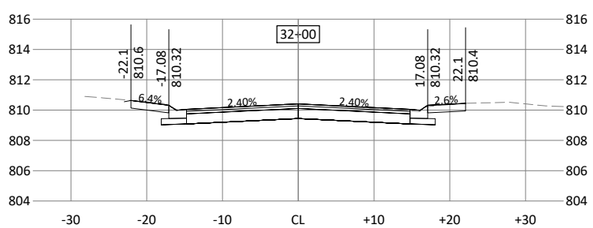


©Bolton & Menk, Inc. 2026. All Rights Reserved
H:\COTT\24X\137045000\CAD\C3D\137045C801.dwg 2/25/2026 6:58:58 AM

HORZ. 0 10 20 SCALE FEET

VERT. 0 5 10 SCALE FEET

I HEREBY CERTIFY THAT THIS PLAN, SPECIFICATION, OR REPORT WAS PREPARED BY ME OR UNDER MY DIRECT SUPERVISION AND THAT I AM A DULY LICENSED PROFESSIONAL ENGINEER UNDER THE LAWS OF THE STATE OF MINNESOTA.

MICHAEL J BOEX
LIC. NO. 44576 DATE MM/DD/YYYY

BOLTON & MENK
3507 HIGH POINT DRIVE NORTH
BLDG. 1 - SUITE E130
OAKDALE, MN 55128
Phone: (651) 704-9970
Email: Oakdale@bolton-menk.com
www.bolton-menk.com

Cottage Grove
Where Pride and Prosperity Meet

| | |
|---|---|
| DESIGNED | ANO |
| DRAWN | BNM |
| CHECKED | MJB |
| CLIENT PROJ. NO. | 137045 |

| NO. | ISSUED FOR | DATE |
|---|---|---|
| | | |

CITY OF COTTAGE GROVE
2026 PAVEMENT MANAGEMENT PROJECT
CROSS SECTIONS - 88TH ST

SHEET
C8.09

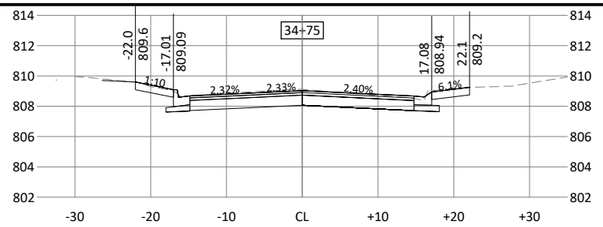


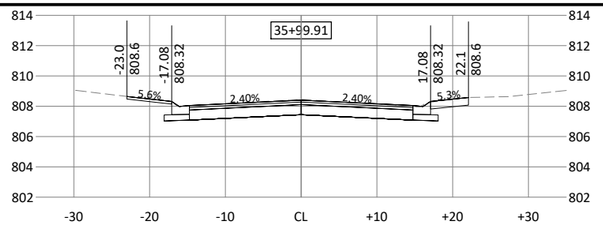


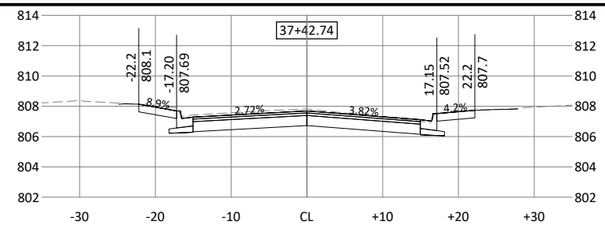


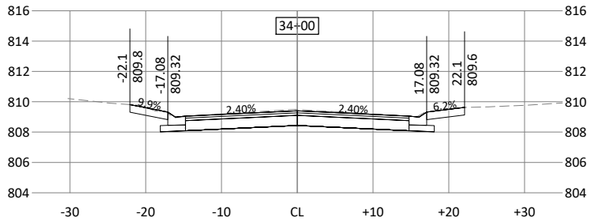


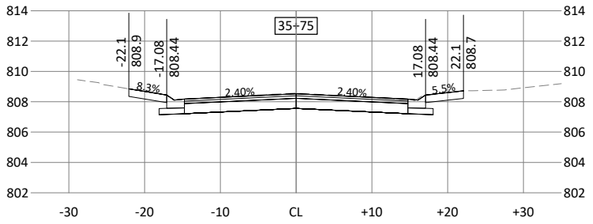


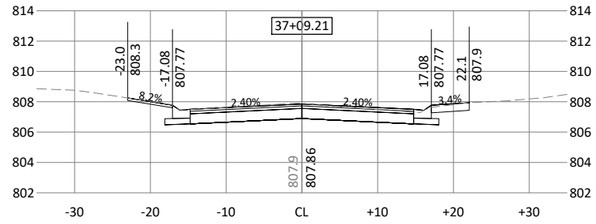


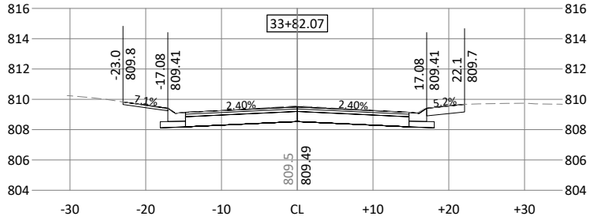


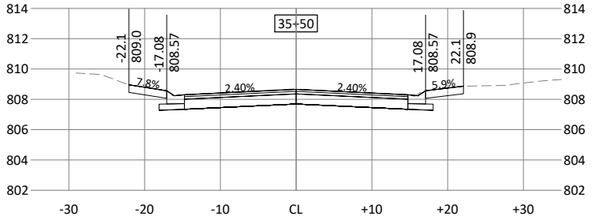


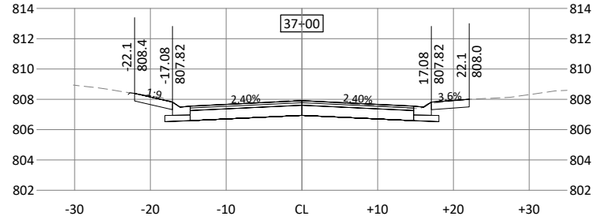


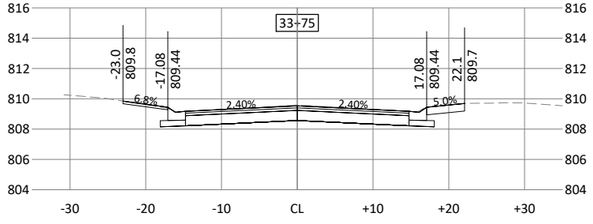


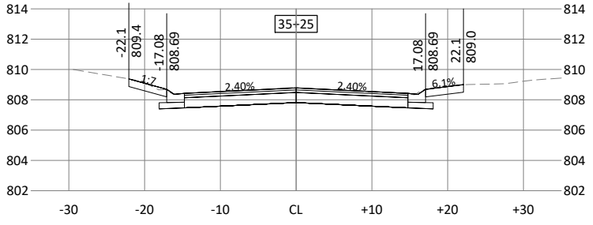


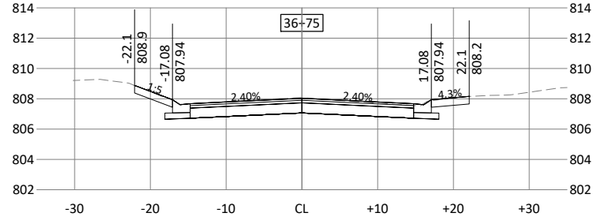


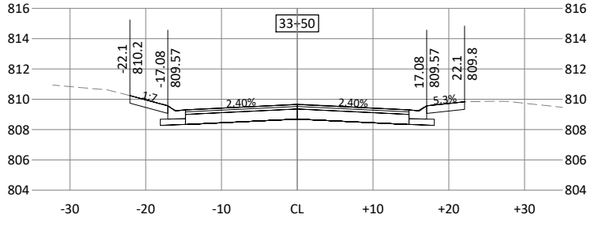


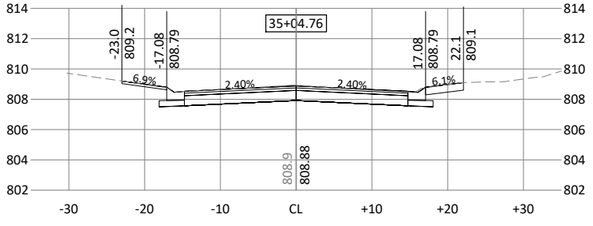


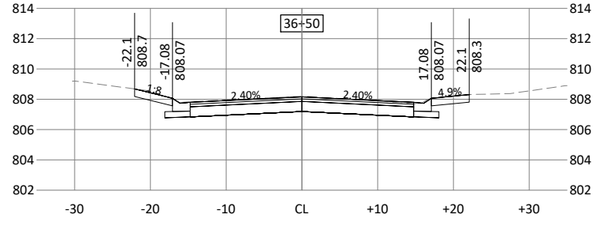


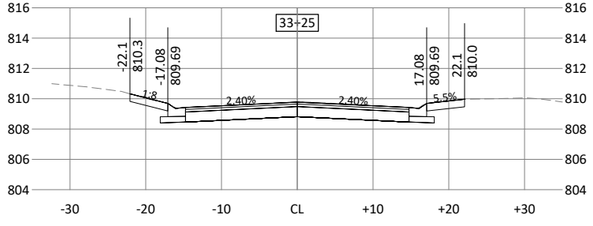


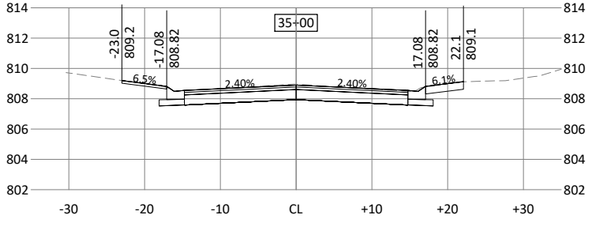


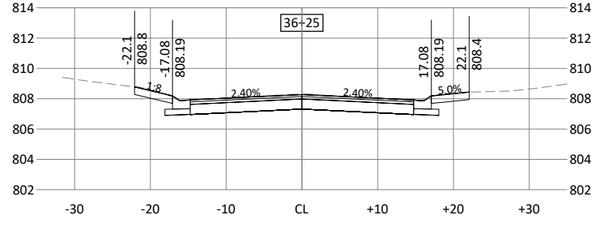


©Bolton & Menk, Inc. 2026. All Rights Reserved
H:\COTT\24X137045000\CAD\C3D\137045C801.dwg 2/25/2026 6:48:29 AM

HORZ. 0 10 20 SCALE FEET

VERT. 0 5 10 SCALE FEET

I HEREBY CERTIFY THAT THIS PLAN, SPECIFICATION, OR REPORT WAS PREPARED BY ME OR UNDER MY DIRECT SUPERVISION AND THAT I AM A DULY LICENSED PROFESSIONAL ENGINEER UNDER THE LAWS OF THE STATE OF MINNESOTA.

MICHAEL J BOEX
LIC. NO. 44576 DATE MM/DD/YYYY

BOLTON & MENK
3507 HIGH POINT DRIVE NORTH
BLDG. 1 - SUITE E130
OAKDALE, MN 55128
Phone: (651) 704-9970
Email: Oakdale@bolton-menk.com
www.bolton-menk.com

Cottage Grove
Where Pride and Prosperity Meet

| DESIGNED | ANO |
|---|---|
| DRAWN | BNM |
| CHECKED | MJB |
| CLIENT PROJ. NO. | 137045 |

| NO. | ISSUED FOR | DATE |
|---|---|---|

CITY OF COTTAGE GROVE
2026 PAVEMENT MANAGEMENT PROJECT
CROSS SECTIONS - 88TH ST

SHEET C8.10

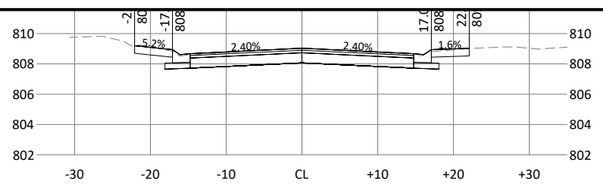


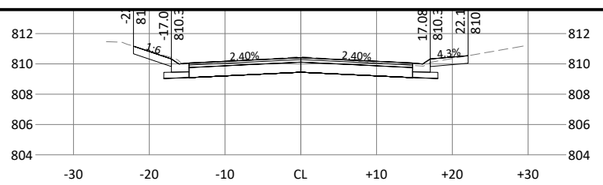





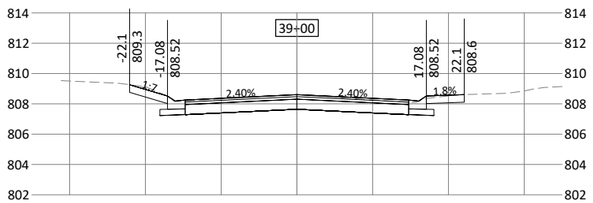


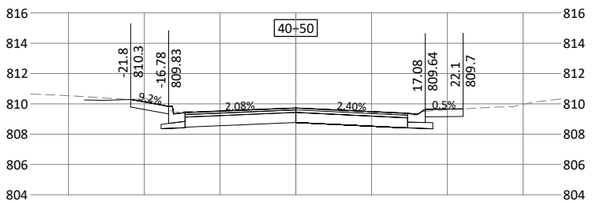


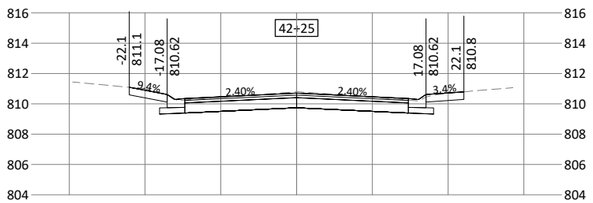


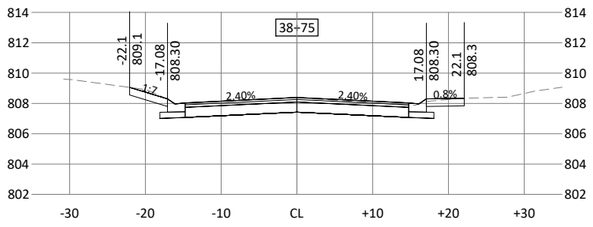


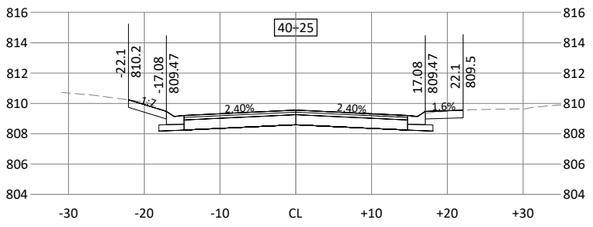


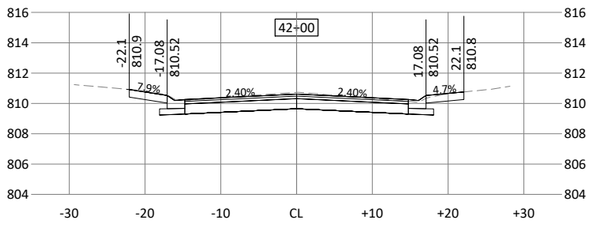


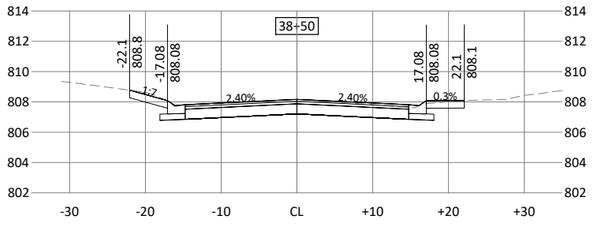


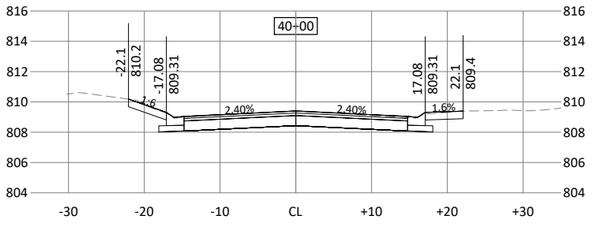


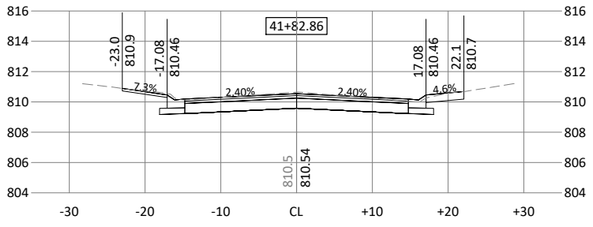


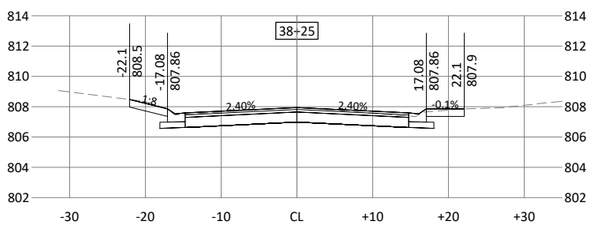


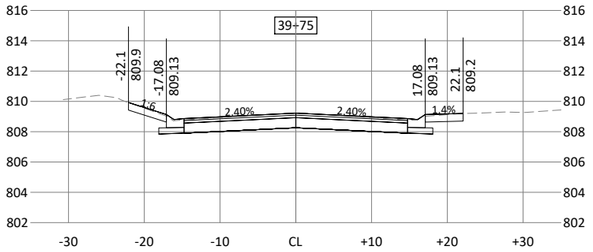


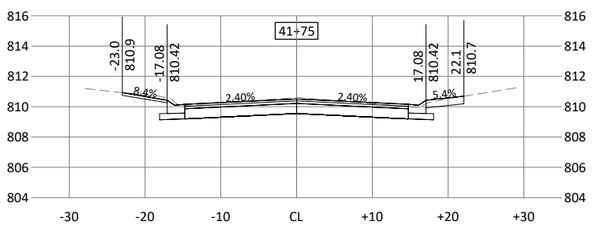


©Bolton & Menk, Inc. 2026, All Rights Reserved
H:\COTT\24X\137045000\CAD\C3D\137045C801.dwg 2/25/2026 6:49:15 AM

HORZ. SCALE 0 10 20 FEET

VERT. SCALE 0 5 10 FEET

I HEREBY CERTIFY THAT THIS PLAN, SPECIFICATION, OR REPORT WAS PREPARED BY ME OR UNDER MY DIRECT SUPERVISION AND THAT I AM A DULY LICENSED PROFESSIONAL ENGINEER UNDER THE LAWS OF THE STATE OF MINNESOTA.

MICHAEL J BOEX
LIC. NO. 44576 DATE MM/DD/YYYY

BOLTON & MENK
3507 HIGH POINT DRIVE NORTH
BLDG. 1 - SUITE E130
OAKDALE, MN 55128
Phone: (651) 704-9970
Email: Oakdale@bolton-menk.com
www.bolton-menk.com

Cottage Grove
Where Pride and Prosperity Meet

| DESIGNED | NO. | ISSUED FOR | DATE |
|---|---|---|---|
| ANO | | | |
| DRAWN | | | |
| BNM | | | |
| CHECKED | | | |
| MJB | | | |
| CLIENT PROJ. NO. | | | |
| 137045 | | | |

CITY OF COTTAGE GROVE
2026 PAVEMENT MANAGEMENT PROJECT
CROSS SECTIONS - 88TH ST

SHEET C8.11

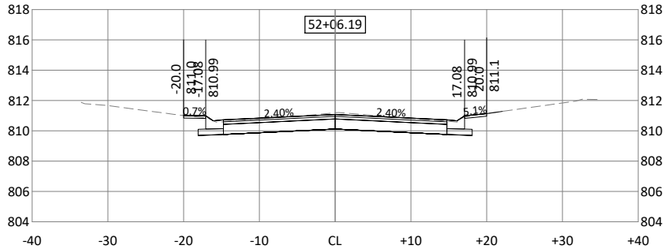


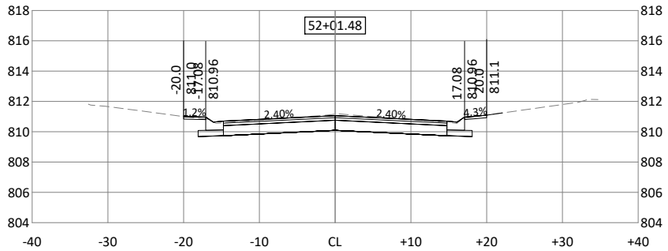


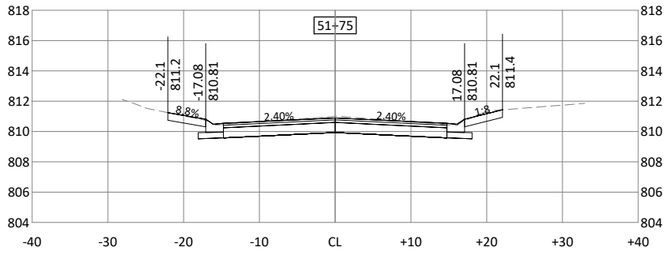


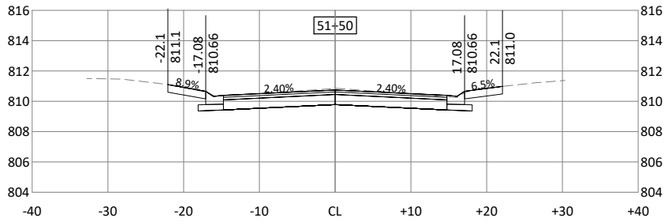


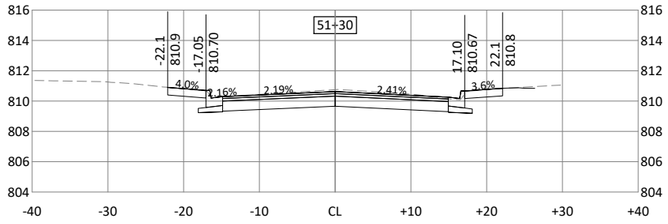


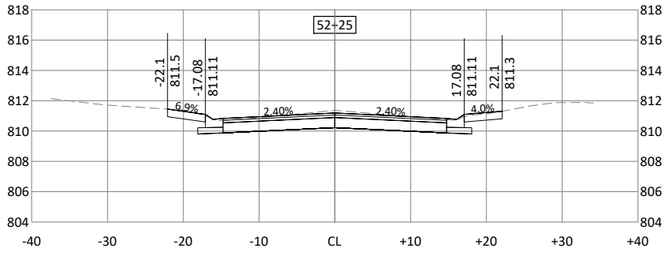


©Bolton & Menk, Inc. 2026. All Rights Reserved
H:\COTT\24X\137045000\CAD\C3D\137045C801.dwg 2/25/2026 6:38:08 AM

HORZ. 0 10 20 SCALE FEET

VERT. 0 5 10 SCALE FEET

I HEREBY CERTIFY THAT THIS PLAN, SPECIFICATION, OR REPORT WAS PREPARED BY ME OR UNDER MY DIRECT SUPERVISION AND THAT I AM A DULY LICENSED PROFESSIONAL ENGINEER UNDER THE LAWS OF THE STATE OF MINNESOTA.

MICHAEL J BOEX
LIC. NO. 44576 DATE MM/DD/YYYY

BOLTON & MENK
3507 HIGH POINT DRIVE NORTH
BLDG. 1 - SUITE E130
OAKDALE, MN 55128
Phone: (651) 704-9970
Email: Oakdale@bolton-menk.com
www.bolton-menk.com

Cottage Grove
Where Pride and Prosperity Meet

| DESIGNED | NO. | ISSUED FOR | DATE |
|---|---|---|---|
| ANO | | | |
| DRAWN | | | |
| BNM | | | |
| CHECKED | | | |
| MJB | | | |
| CLIENT PROJ. NO. | | | |
| 137045 | | | |

CITY OF COTTAGE GROVE
2026 PAVEMENT MANAGEMENT PROJECT
CROSS SECTIONS - 88TH ST CDS

SHEET
C8.12

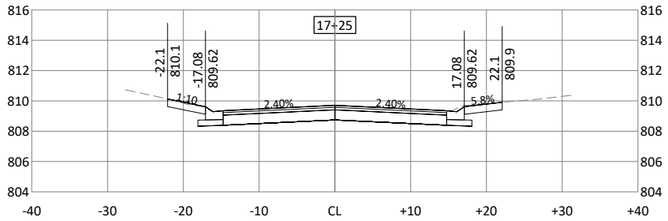


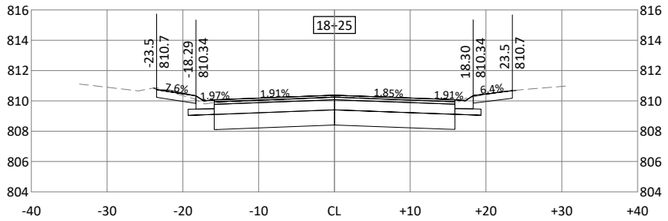


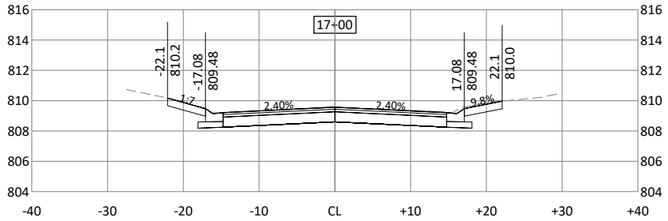


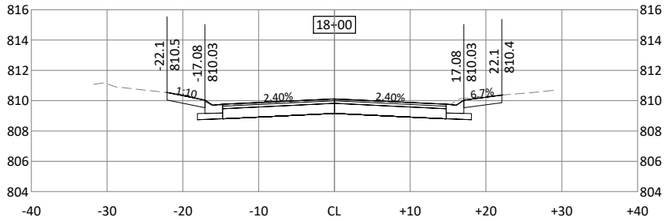


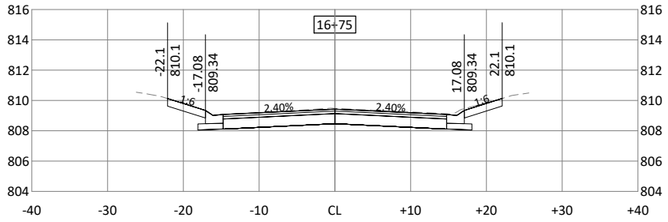


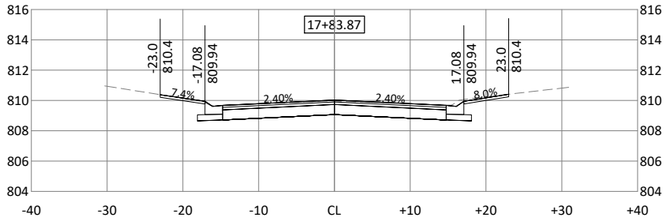


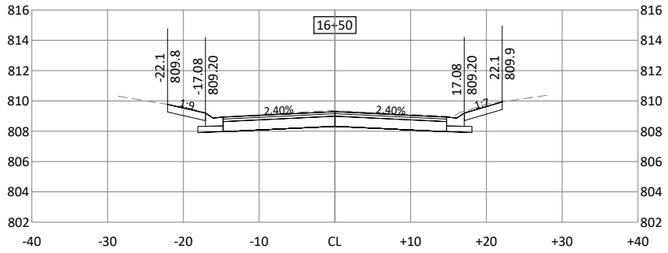


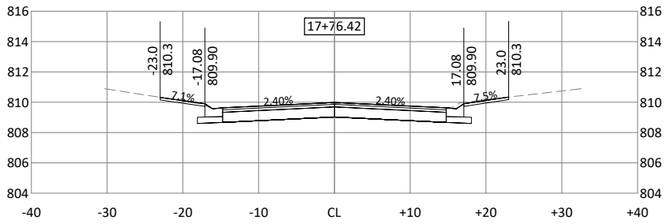


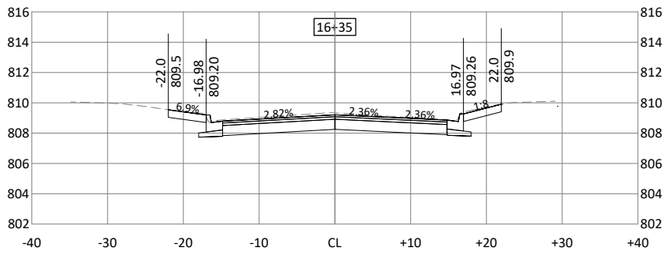


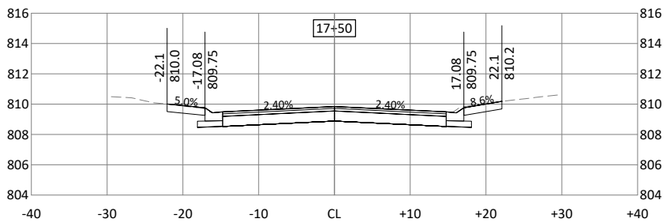


©Bolton & Menk, Inc. 2026. All Rights Reserved
H:\CITY\2AX\13704500\CAD\C3D\13704SC801.dwg 2/25/2026 6:54:56 AM

HORZ. SCALE 0 10 20 FEET

VERT. SCALE 0 5 10 FEET

I HEREBY CERTIFY THAT THIS PLAN, SPECIFICATION, OR REPORT WAS PREPARED BY ME OR UNDER MY DIRECT SUPERVISION AND THAT I AM A DULY LICENSED PROFESSIONAL ENGINEER UNDER THE LAWS OF THE STATE OF MINNESOTA.

MICHAEL J BOEX
LIC. NO. 44576 DATE MM/DD/YYYY

BOLTON & MENK
3507 HIGH POINT DRIVE NORTH
BLDG. 1 - SUITE E130
OAKDALE, MN 55128
Phone: (651) 704-9970
Email: Oakdale@bolton-menk.com
www.bolton-menk.com

Cottage Grove
Where Pride and Prosperity Meet

| | |
|---|---|
| DESIGNED | ANO |
| DRAWN | BNM |
| CHECKED | MJB |
| CLIENT PROJ. NO. | 137045 |

| NO. | ISSUED FOR | DATE |
|---|---|---|
| | | |

CITY OF COTTAGE GROVE
2026 PAVEMENT MANAGEMENT PROJECT
CROSS SECTIONS - IRISH AVE CDS

SHEET C8.13

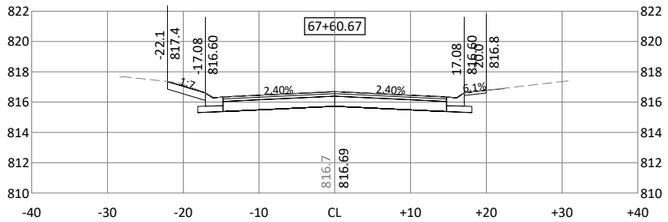


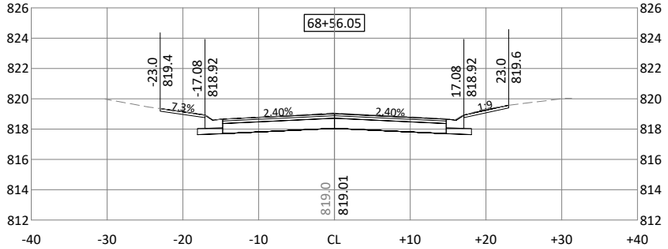


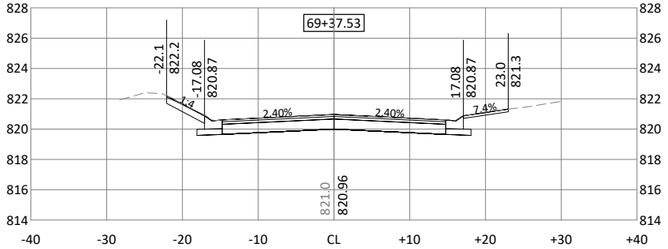


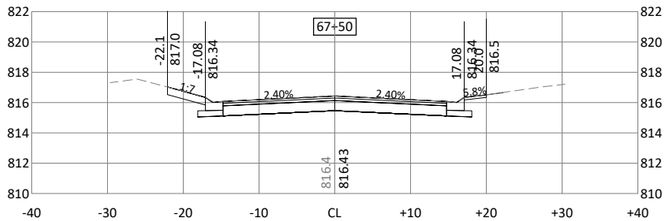


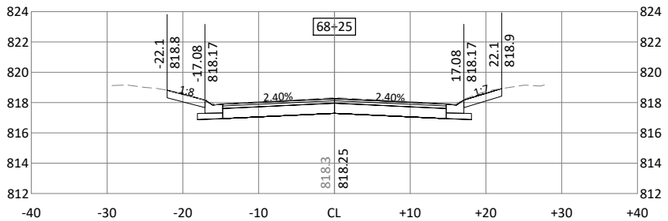


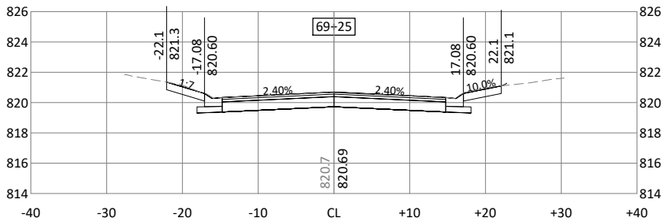


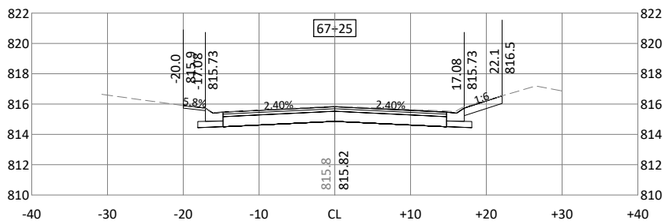


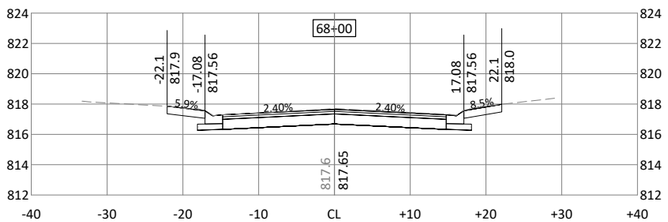


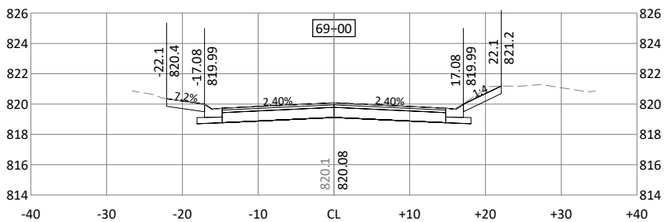


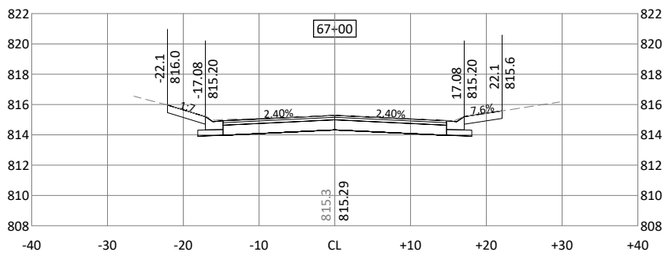


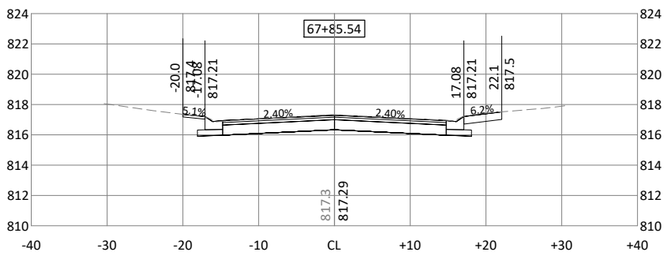


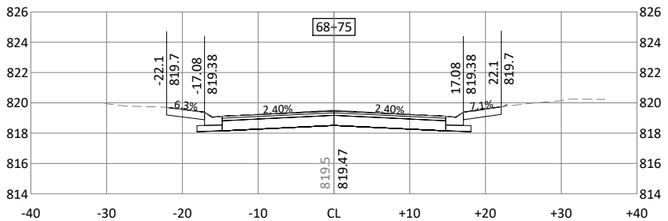


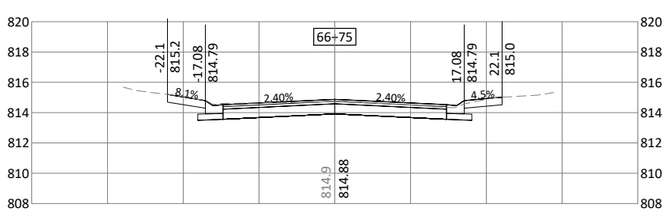


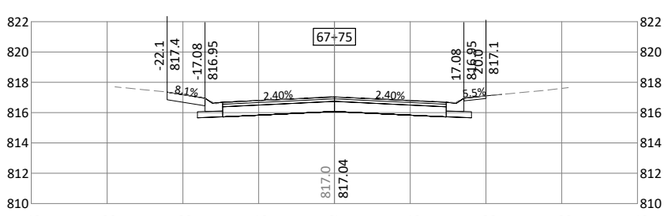


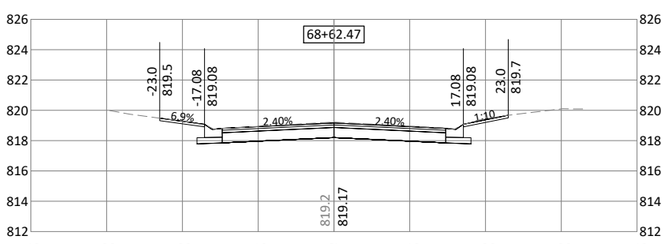


©Bolton & Menk, Inc. 2026. All Rights Reserved
H:\COTT\24X137045000\CAD\C3D\137045C801.dwg 2/25/2026 6:56:15 AM

HORZ. 0 10 20 SCALE FEET

VERT. 0 5 10 SCALE FEET

I HEREBY CERTIFY THAT THIS PLAN, SPECIFICATION, OR REPORT WAS PREPARED BY ME OR UNDER MY DIRECT SUPERVISION AND THAT I AM A DULY LICENSED PROFESSIONAL ENGINEER UNDER THE LAWS OF THE STATE OF MINNESOTA.

MICHAEL J BOEX
LIC. NO. 44576 DATE MM/DD/YYYY

BOLTON & MENK
3507 HIGH POINT DRIVE NORTH
BLDG. 1 - SUITE E130
OAKDALE, MN 55128
Phone: (651) 704-9970
Email: Oakdale@bolton-menk.com
www.bolton-menk.com

Cottage Grove
Where Pride and Prosperity Meet

| DESIGNED | NO. | ISSUED FOR | DATE |
|---|---|---|---|
| ANO | | | |
| DRAWN | | | |
| BNM | | | |
| CHECKED | | | |
| MJB | | | |
| CLIENT PROJ. NO. | | | |
| 137045 | | | |

CITY OF COTTAGE GROVE
2026 PAVEMENT MANAGEMENT PROJECT
CROSS SECTIONS - HILLSIDE TR

SHEET C8.14

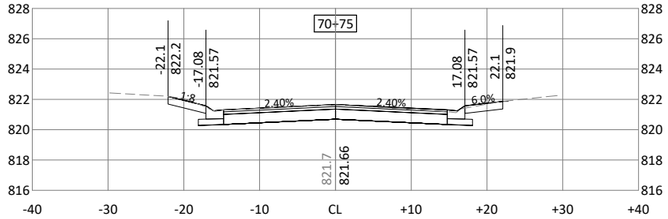


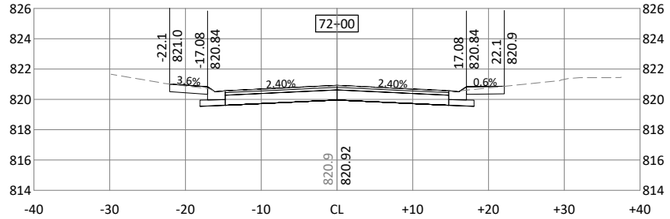


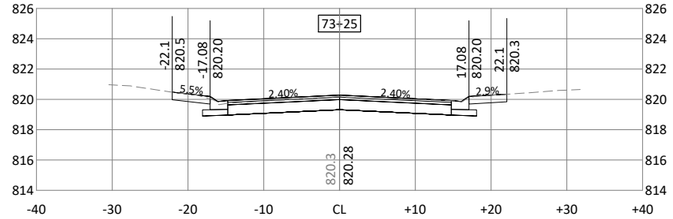


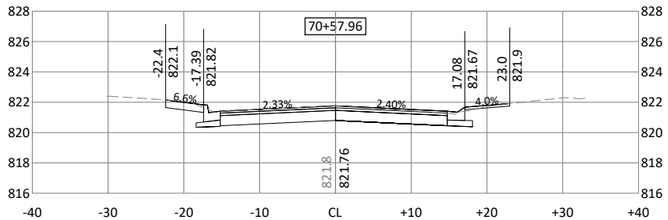


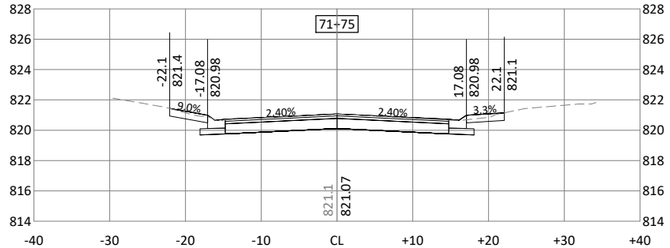


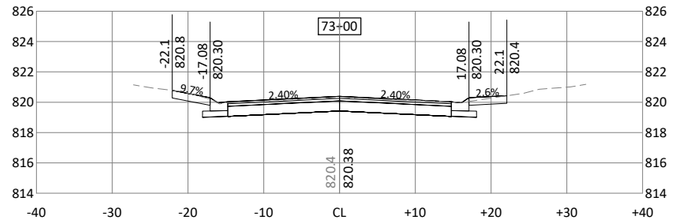


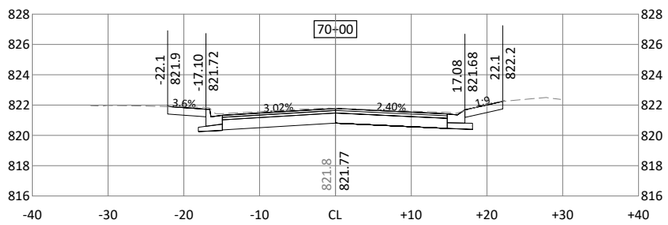


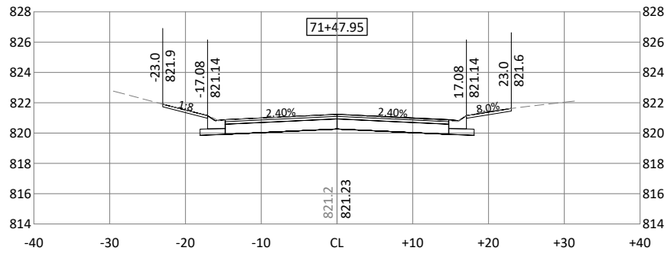


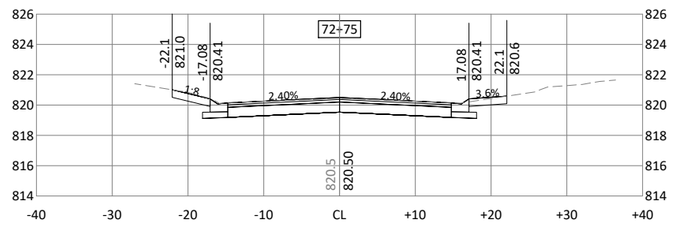


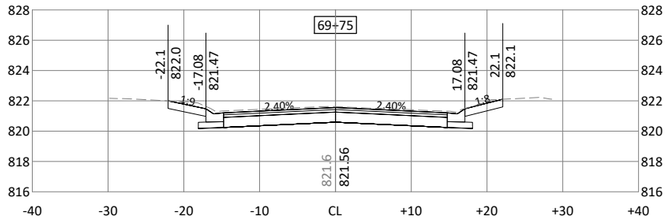


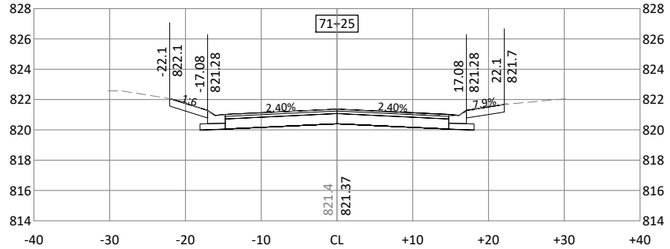


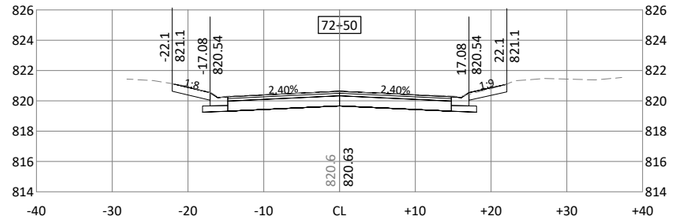


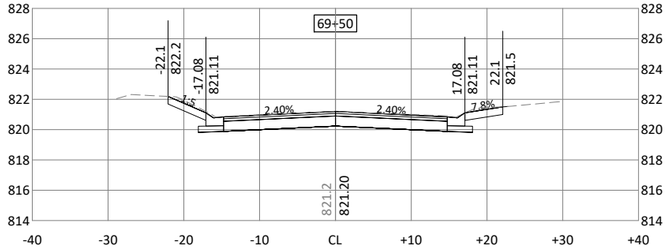


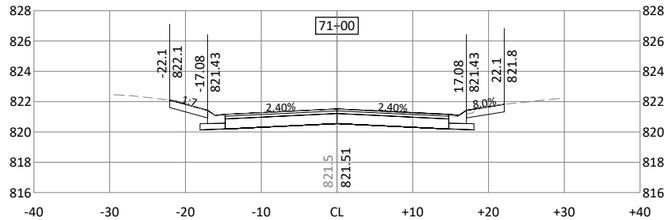


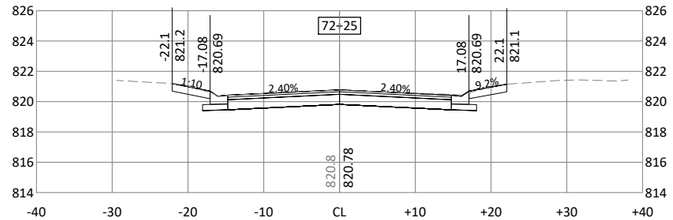


©Bolton & Menk, Inc. 2026. All Rights Reserved
H:\COT\24X\137045000\CAD\C3D\137045C801.dwg 2/25/2026 6:57:00 AM

HORZ. SCALE 0 10 20 FEET

VERT. SCALE 0 5 10 FEET

I HEREBY CERTIFY THAT THIS PLAN, SPECIFICATION, OR REPORT WAS PREPARED BY ME OR UNDER MY DIRECT SUPERVISION AND THAT I AM A DULY LICENSED PROFESSIONAL ENGINEER UNDER THE LAWS OF THE STATE OF MINNESOTA.

MICHAEL J BOEX
LIC. NO. 44576 DATE MM/DD/YYYY

BOLTON & MENK
3507 HIGH POINT DRIVE NORTH
BLDG. 1 - SUITE E130
OAKDALE, MN 55128
Phone: (651) 704-9970
Email: Oakdale@bolton-menk.com
www.bolton-menk.com

Cottage Grove
Where Pride and Prosperity Meet

| DESIGNED | ANO |
|---|---|
| DRAWN | BNM |
| CHECKED | MJB |
| CLIENT PROJ. NO. | 137045 |

| NO. | ISSUED FOR | DATE |
|---|---|---|
| | | |

CITY OF COTTAGE GROVE
2026 PAVEMENT MANAGEMENT PROJECT
CROSS SECTIONS - HILLSIDE TR

SHEET C8.15

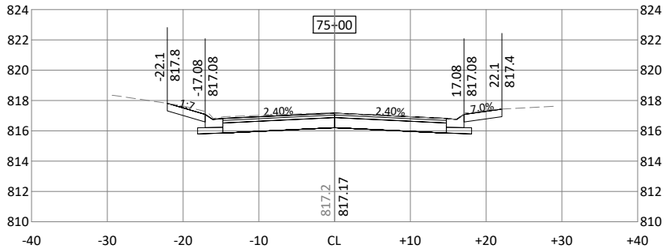


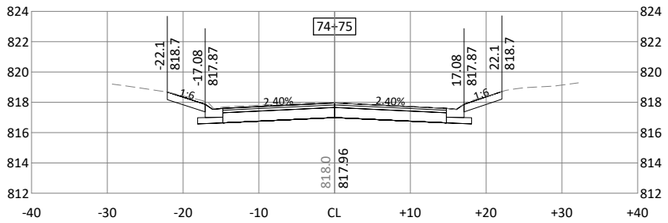


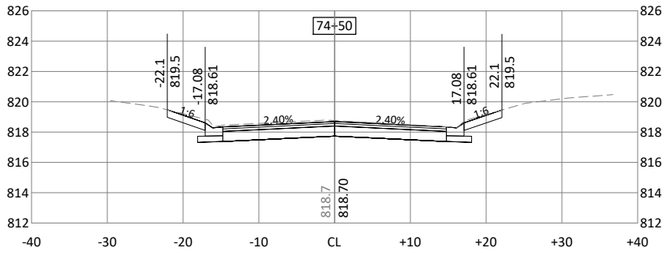


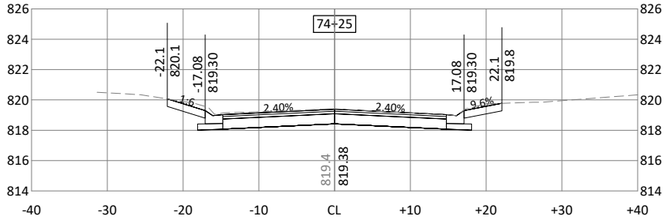


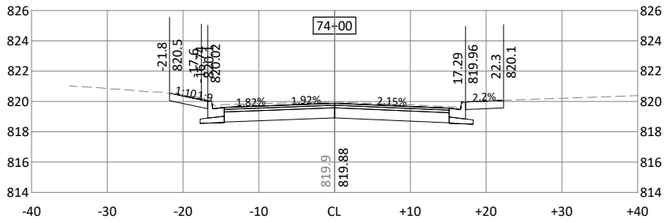


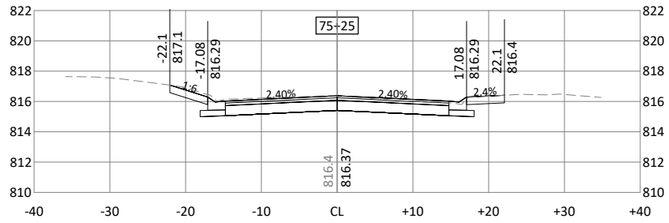


©Bolton & Menk, Inc. 2026. All Rights Reserved
H:\COTT\24X\137045000\CAD\C3D\137045C801.dwg 2/25/2026 6:25:41 AM

HORZ. SCALE 0 10 20 FEET
VERT. SCALE 0 5 10 FEET

I HEREBY CERTIFY THAT THIS PLAN, SPECIFICATION, OR REPORT WAS PREPARED BY ME OR UNDER MY DIRECT SUPERVISION AND THAT I AM A DULY LICENSED PROFESSIONAL ENGINEER UNDER THE LAWS OF THE STATE OF MINNESOTA.

MICHAEL J BOEX
LIC. NO. 44576 DATE MM/DD/YYYY

BOLTON & MENK
3507 HIGH POINT DRIVE NORTH
BLDG. 1 - SUITE E130
OAKDALE, MN 55128
Phone: (651) 704-9970
Email: Oakdale@bolton-menk.com
www.bolton-menk.com

Cottage Grove
Where Pride and Prosperity Meet

| DESIGNED | ANO |
|---|---|
| DRAWN | BNM |
| CHECKED | MJB |
| CLIENT PROJ. NO. | 137045 |

| NO. | ISSUED FOR | DATE |
|---|---|---|
| | | |

CITY OF COTTAGE GROVE
2026 PAVEMENT MANAGEMENT PROJECT
CROSS SECTIONS - HILLSIDE TR

SHEET C8.16

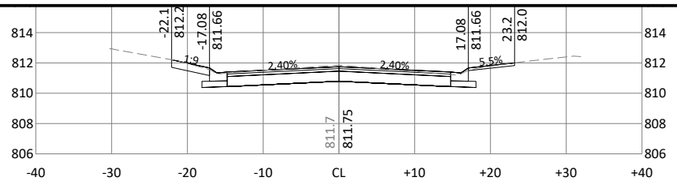


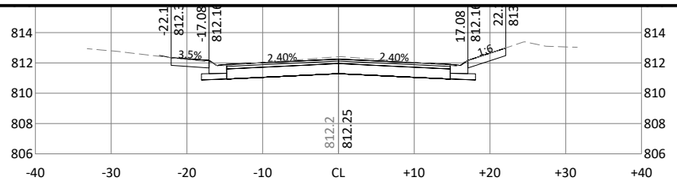


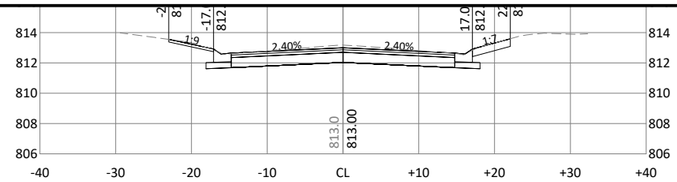


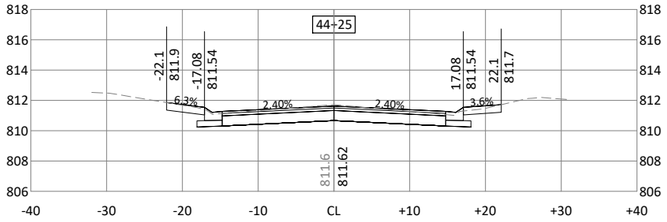


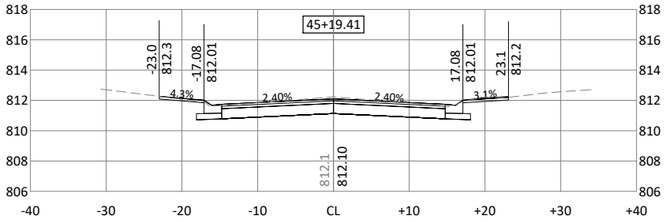


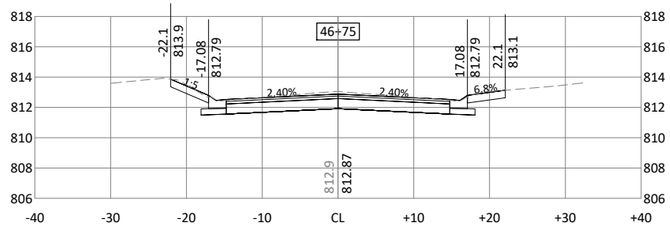


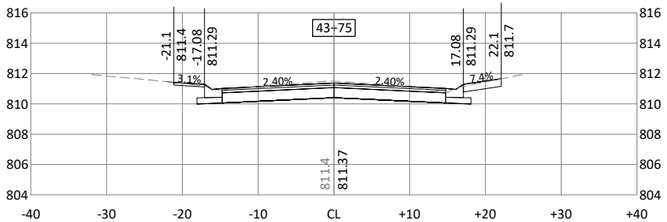


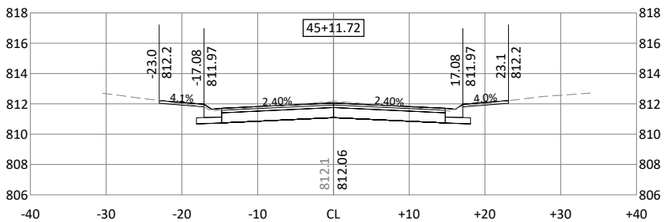


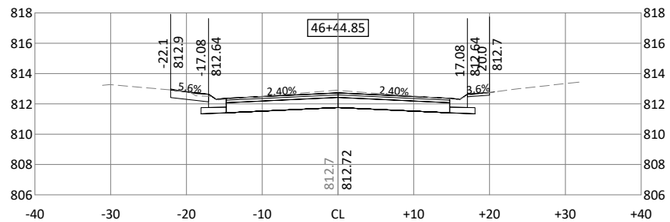


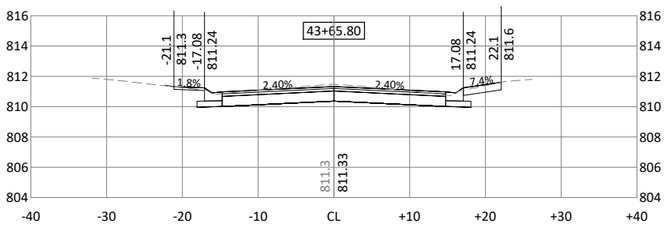


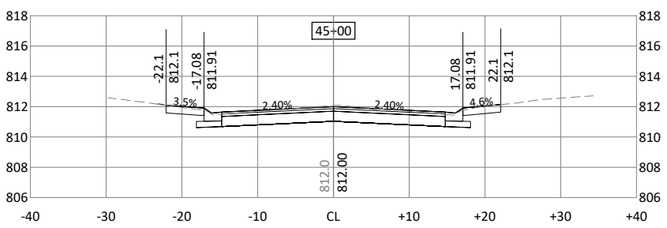


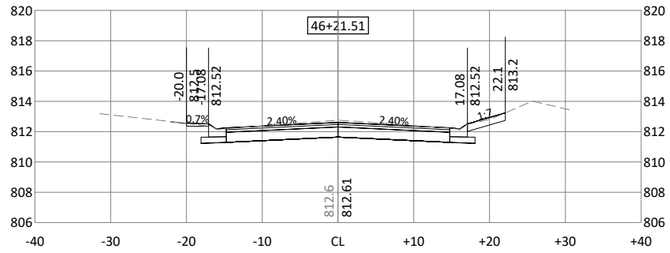


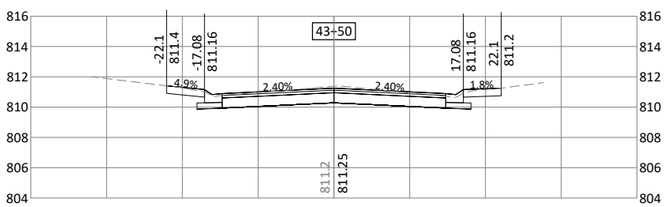


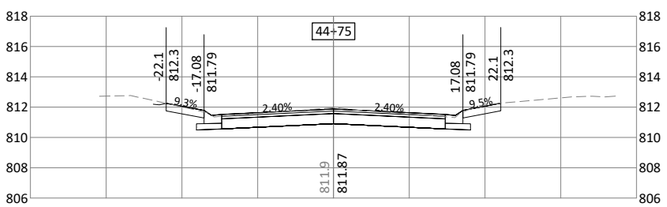


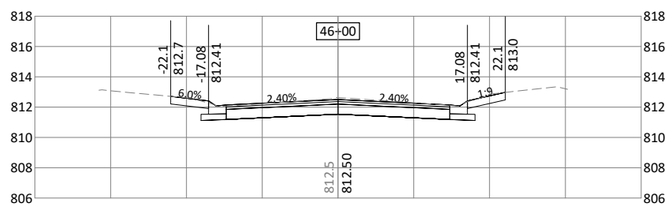


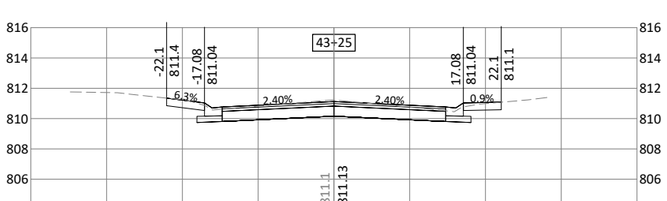


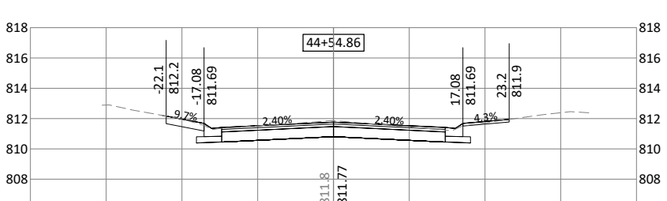


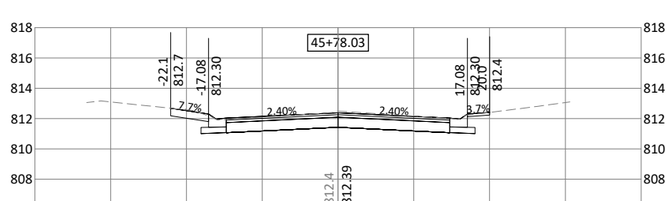


©Bolton & Menk, Inc. 2026. All Rights Reserved
H:\COTT\24X13704500\CAD\C3D\137045C801.dwg 2/25/2026 6:35:35 AM

HORZ. 0 10 20 SCALE FEET

VERT. 0 5 10 SCALE FEET

I HEREBY CERTIFY THAT THIS PLAN, SPECIFICATION, OR REPORT WAS PREPARED BY ME OR UNDER MY DIRECT SUPERVISION AND THAT I AM A DULY LICENSED PROFESSIONAL ENGINEER UNDER THE LAWS OF THE STATE OF MINNESOTA.

MICHAEL J BOEX
LIC. NO. 44576 DATE MM/DD/YYYY

BOLTON & MENK
3507 HIGH POINT DRIVE NORTH
BLDG. 1 - SUITE E130
OAKDALE, MN 55128
Phone: (651) 704-9970
Email: Oakdale@bolton-menk.com
www.bolton-menk.com

Cottage Grove
Where Pride and Prosperity Meet

| | |
|---|---|
| DESIGNED | ANO |
| DRAWN | BNM |
| CHECKED | MJB |
| CLIENT PROJ. NO. | 137045 |

| NO. | ISSUED FOR | DATE |
|---|---|---|
| | | |

CITY OF COTTAGE GROVE
2026 PAVEMENT MANAGEMENT PROJECT
CROSS SECTIONS - IVYWOOD AVE

SHEET C8.17

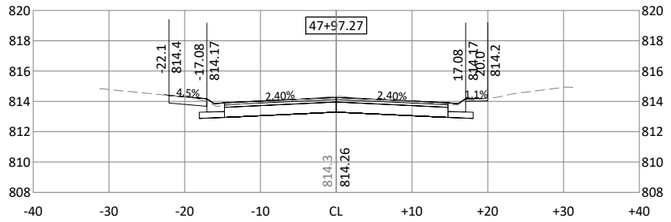


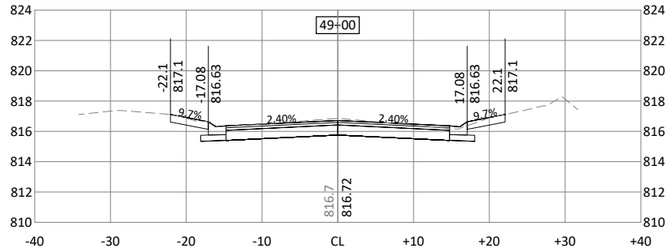


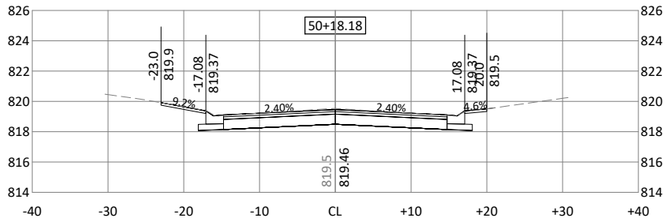


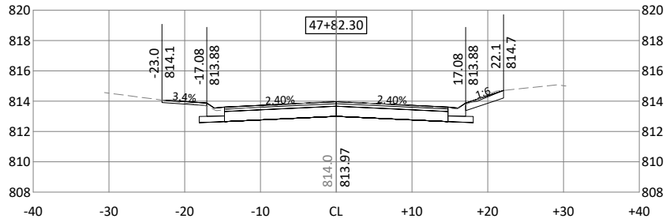


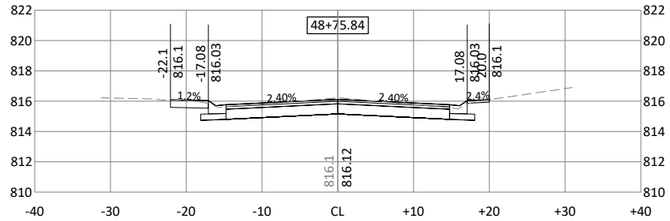


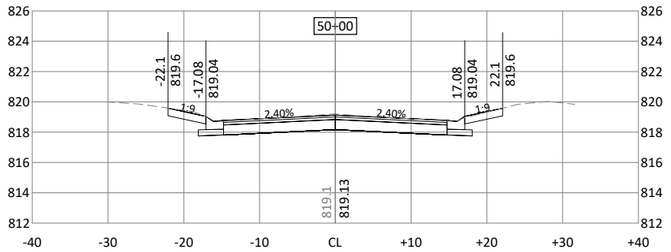


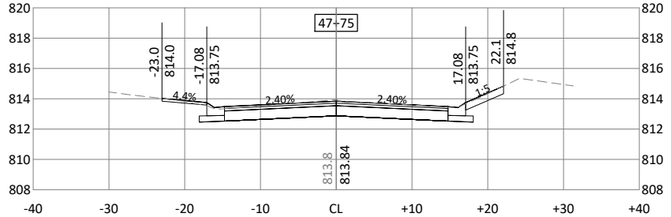


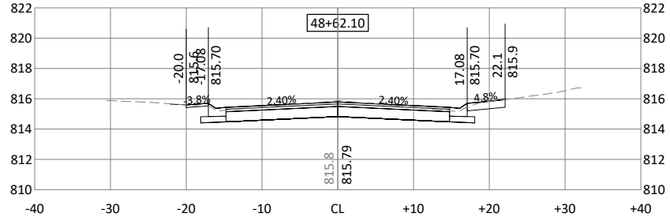


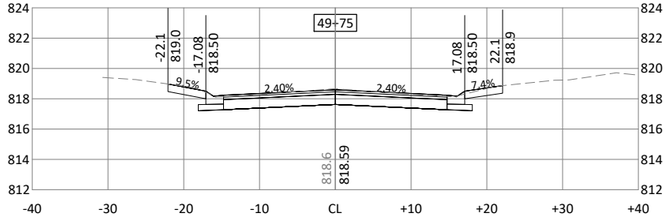


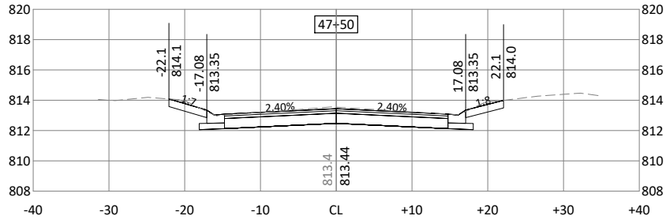


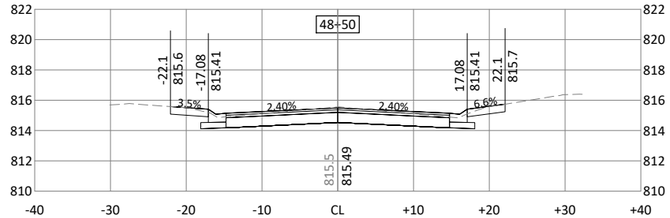


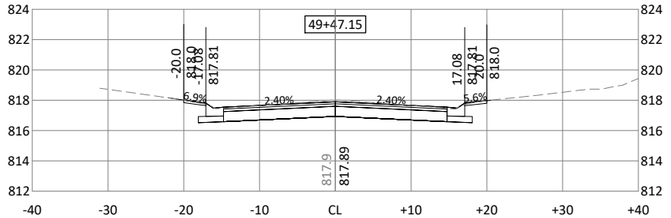


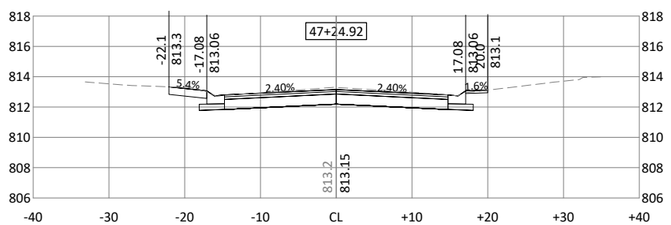


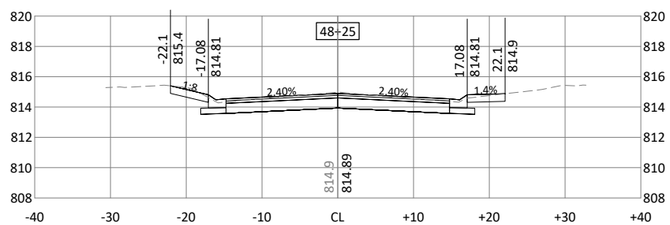


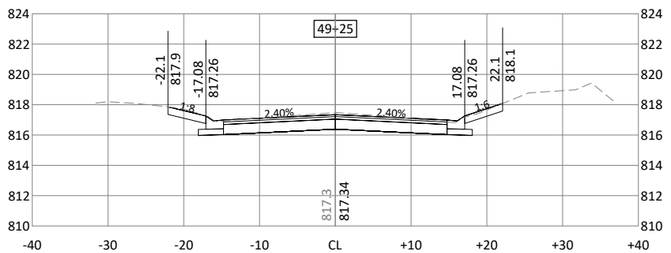


©Bolton & Menk, Inc. 2026, All Rights Reserved
H:\COTT_2AX\137045000\CAD\C3D\137045C801.dwg 2/25/2026 6:50:06 AM

HORZ. SCALE 0 10 20 FEET

VERT. SCALE 0 5 10 FEET

I HEREBY CERTIFY THAT THIS PLAN, SPECIFICATION, OR REPORT WAS PREPARED BY ME OR UNDER MY DIRECT SUPERVISION AND THAT I AM A DULY LICENSED PROFESSIONAL ENGINEER UNDER THE LAWS OF THE STATE OF MINNESOTA.

MICHAEL J BOEY

LIC. NO. 44576 DATE MM/DD/YYYY

BOLTON & MENK
3507 HIGH POINT DRIVE NORTH
BLDG. 1 - SUITE E130
OAKDALE, MN 55128
Phone: (651) 704-9970
Email: Oakdale@bolton-menk.com
www.bolton-menk.com

Cottage Grove
Where Pride and Prosperity Meet

| | |
|---|---|
| DESIGNED | ANO |
| DRAWN | BNM |
| CHECKED | MJB |
| CLIENT PROJ. NO. | 137045 |

| NO. | ISSUED FOR | DATE |
|---|---|---|
| | | |

CITY OF COTTAGE GROVE

2026 PAVEMENT MANAGEMENT PROJECT

CROSS SECTIONS - IVYWOOD AVE

SHEET C8.18

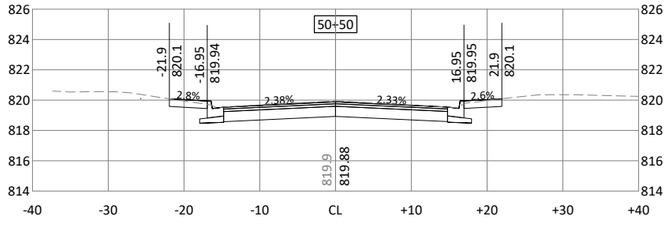


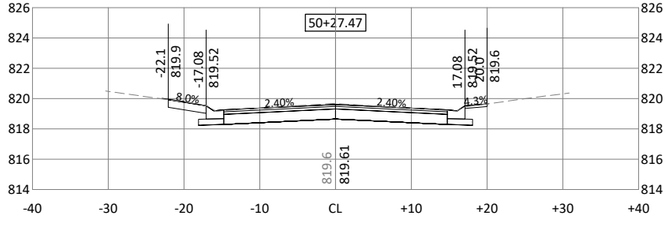


©Bolton & Menk, Inc. 2026. All Rights Reserved
H:\COTT\24X137045000\CAD\C3D\137045C801.dwg 2/25/2026 6:35:00 AM

HORZ. 0 10 20 SCALE FEET

VERT. 0 5 10 SCALE FEET

I HEREBY CERTIFY THAT THIS PLAN, SPECIFICATION, OR REPORT WAS PREPARED BY ME OR UNDER MY DIRECT SUPERVISION AND THAT I AM A DULY LICENSED PROFESSIONAL ENGINEER UNDER THE LAWS OF THE STATE OF MINNESOTA.

MICHAEL J BOEX
LIC. NO. 44576 DATE MM/DD/YYYY

BOLTON & MENK
3507 HIGH POINT DRIVE NORTH
BLDG. 1 - SUITE E130
OAKDALE, MN 55128
Phone: (651) 704-9970
Email: Oakdale@bolton-menk.com
www.bolton-menk.com

Cottage Grove
Where Pride and Prosperity Meet

| DESIGNED | ANO |
|---|---|
| DRAWN | BNM |
| CHECKED | MJB |
| CLIENT PROJ. NO. | 137045 |

| NO. | ISSUED FOR | DATE |
|---|---|---|

CITY OF COTTAGE GROVE
2026 PAVEMENT MANAGEMENT PROJECT
CROSS SECTIONS - IVYWOOD AVE

SHEET C8.19

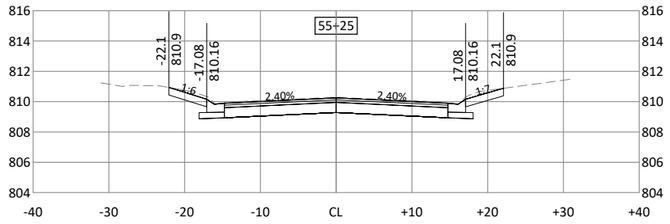


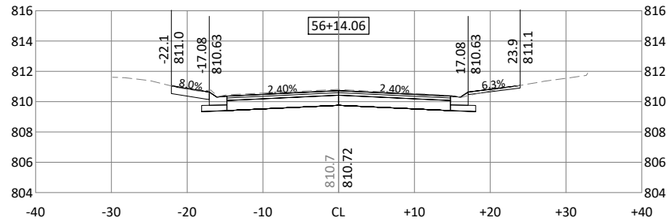


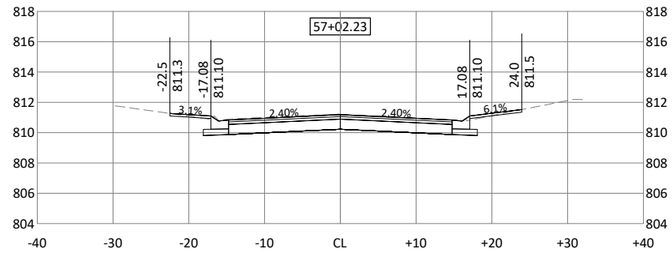


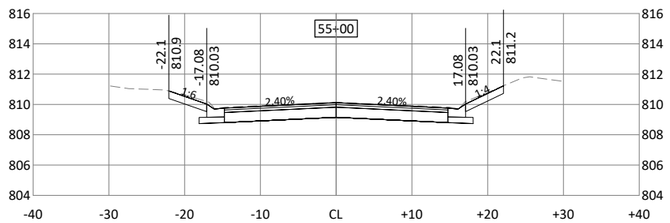


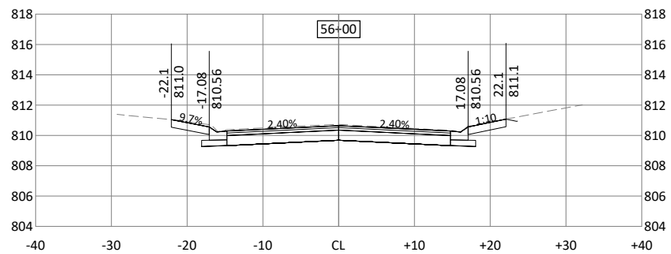


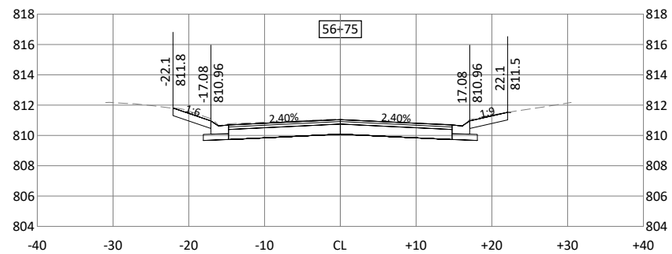


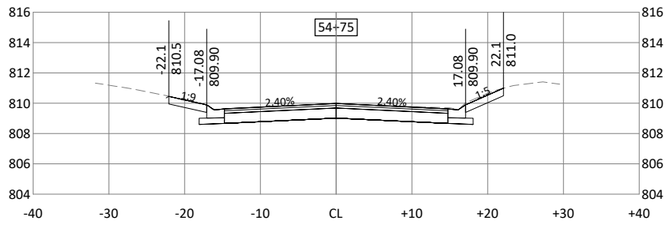


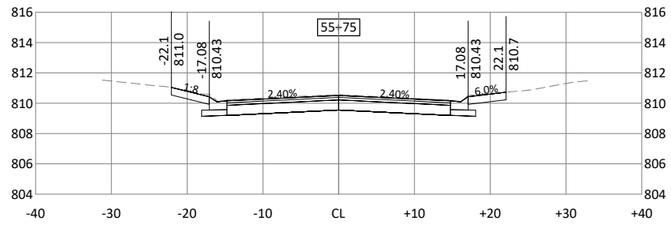


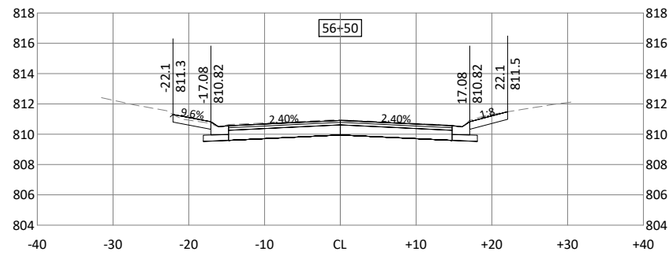


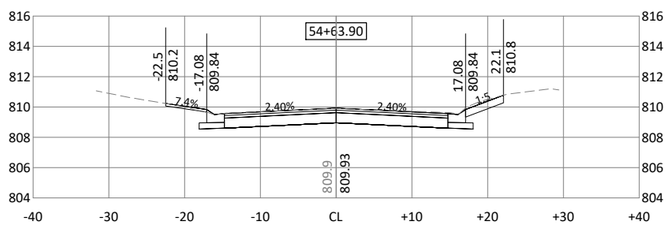


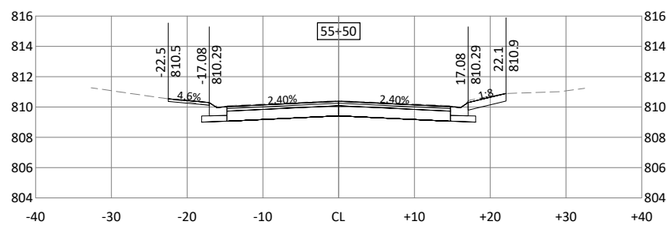


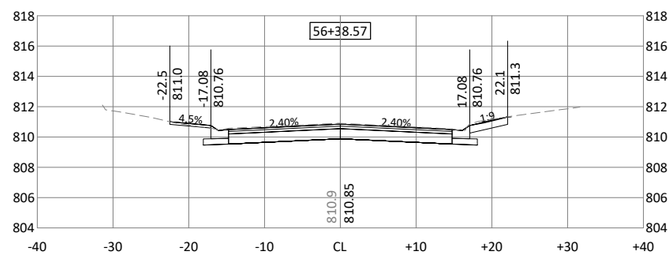


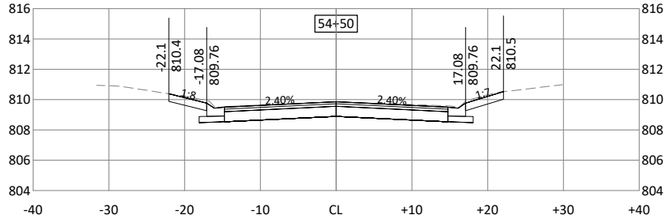


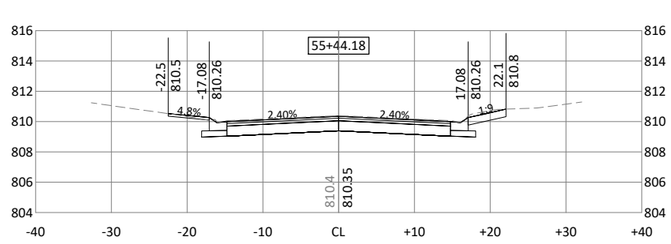


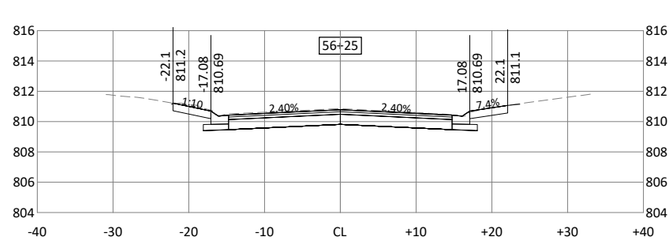


©Bolton & Menk, Inc. 2026. All Rights Reserved
H:\COTT\2Ax\137045001\CAD\C3D\137045801.dwg 2/25/2026 6:48:35 AM

HORZ. 0 10 20 SCALE FEET

VERT. 0 5 10 SCALE FEET

I HEREBY CERTIFY THAT THIS PLAN, SPECIFICATION, OR REPORT WAS PREPARED BY ME OR UNDER MY DIRECT SUPERVISION AND THAT I AM A DULY LICENSED PROFESSIONAL ENGINEER UNDER THE LAWS OF THE STATE OF MINNESOTA.

MICHAEL J BOEX

LIC. NO. 44576 DATE MM/DD/YYYY

BOLTON & MENK
3507 HIGH POINT DRIVE NORTH
BLDG. 1 - SUITE E130
OAKDALE, MN 55128
Phone: (651) 704-9970
Email: Oakdale@bolton-menk.com
www.bolton-menk.com

Cottage Grove
Where Pride and Prosperity Meet

| DESIGNED | ANO |
|---|---|
| DRAWN | BNM |
| CHECKED | MJB |
| CLIENT PROJ. NO. | 137045 |

| NO. | ISSUED FOR | DATE |
|---|---|---|
| | | |

CITY OF COTTAGE GROVE
2026 PAVEMENT MANAGEMENT PROJECT
CROSS SECTIONS - ISLE AVE

SHEET C8.20

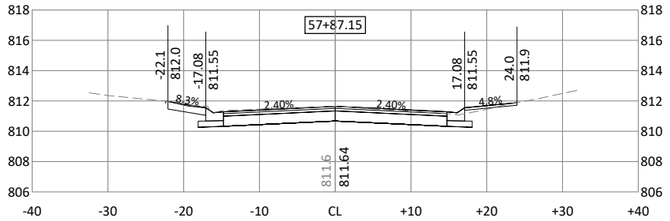


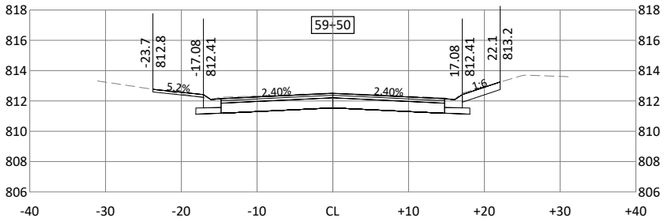


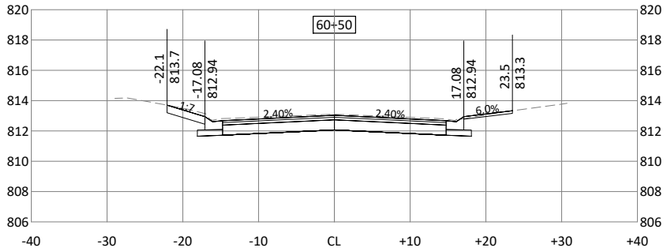


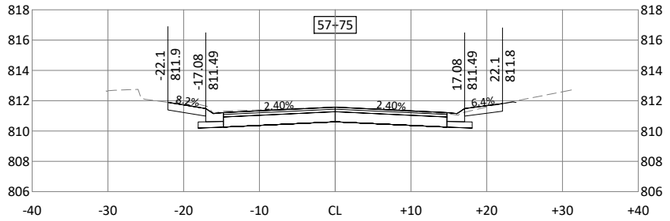


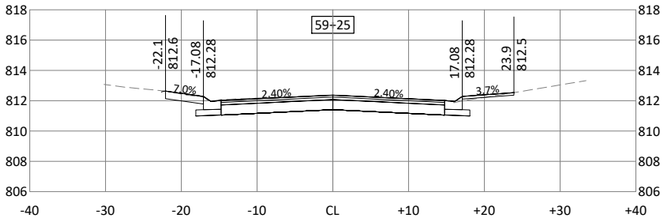


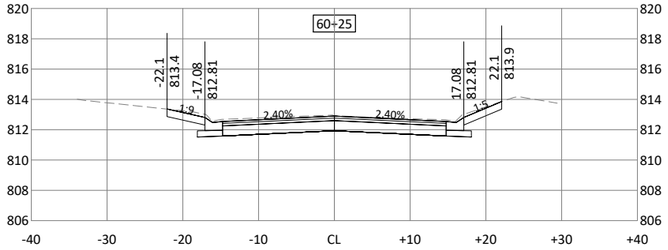


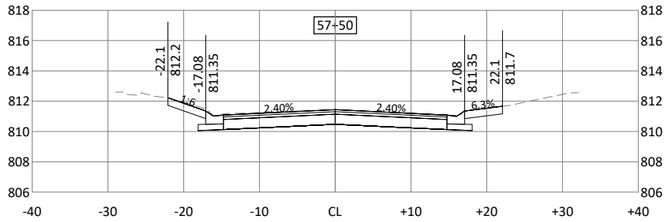


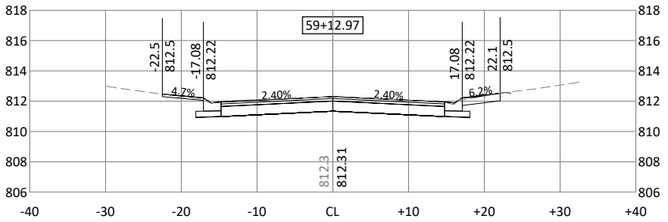


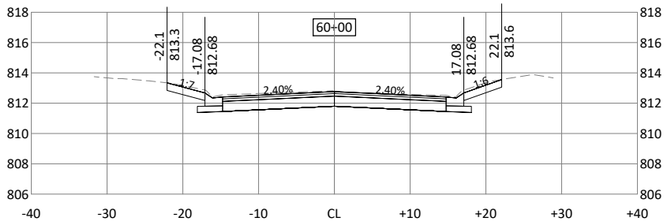


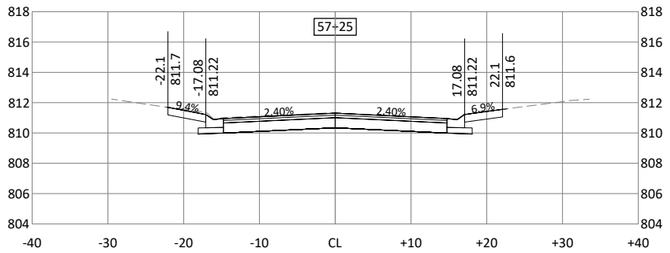


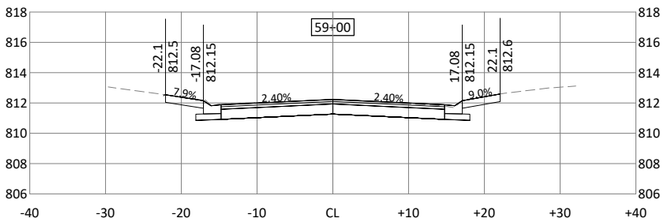


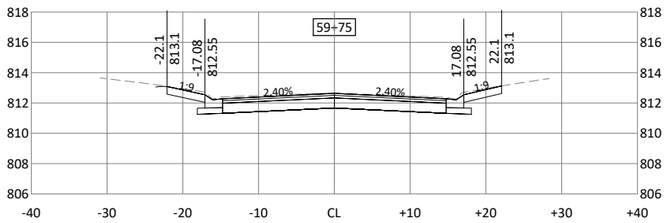


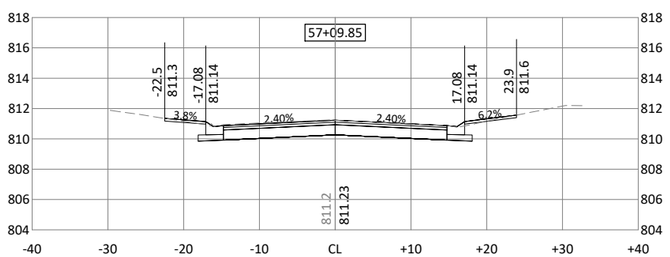


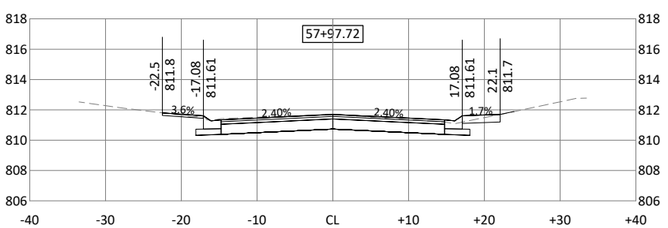


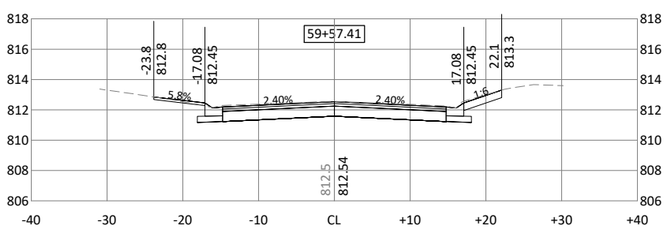


©Bolton & Menk, Inc. 2026. All Rights Reserved
H:\COTT\24X137045000\CAD\C3D\137045C801.dwg 2/25/2026 7:07:52 AM

HORZ. SCALE 0 10 20 FEET

VERT. SCALE 0 5 10 FEET

I HEREBY CERTIFY THAT THIS PLAN, SPECIFICATION, OR REPORT WAS PREPARED BY ME OR UNDER MY DIRECT SUPERVISION AND THAT I AM A DULY LICENSED PROFESSIONAL ENGINEER UNDER THE LAWS OF THE STATE OF MINNESOTA.

MICHAEL J BOEX
LIC. NO. 44576 DATE MM/DD/YYYY

BOLTON & MENK
3507 HIGH POINT DRIVE NORTH
BLDG. 1 - SUITE E130
OAKDALE, MN 55128
Phone: (651) 704-9970
Email: Oakdale@bolton-menk.com
www.bolton-menk.com

Cottage Grove
Where Pride and Prosperity Meet

| | |
|---|---|
| DESIGNED | ANO |
| DRAWN | BNM |
| CHECKED | MJB |
| CLIENT PROJ. NO. | 137045 |

| NO. | ISSUED FOR | DATE |
|---|---|---|

CITY OF COTTAGE GROVE
2026 PAVEMENT MANAGEMENT PROJECT
CROSS SECTIONS - ISLE AVE

SHEET C8.21

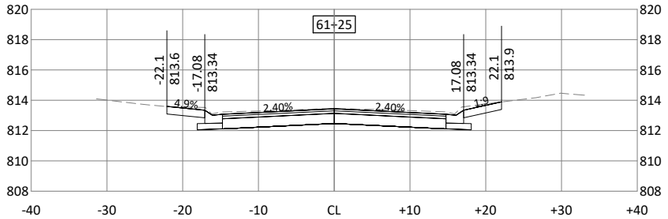


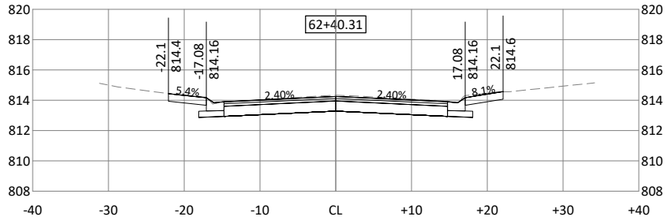


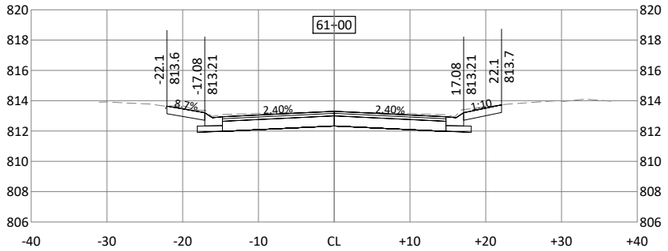


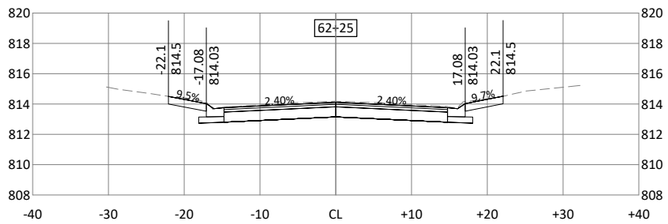


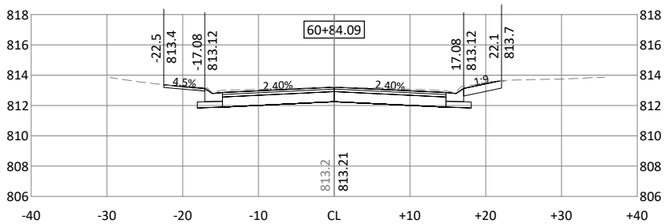


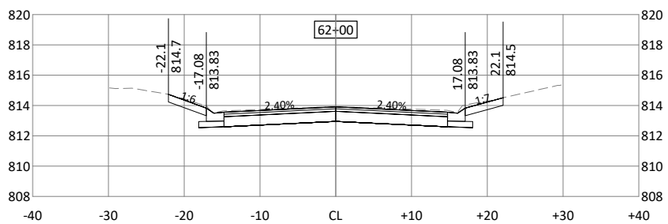


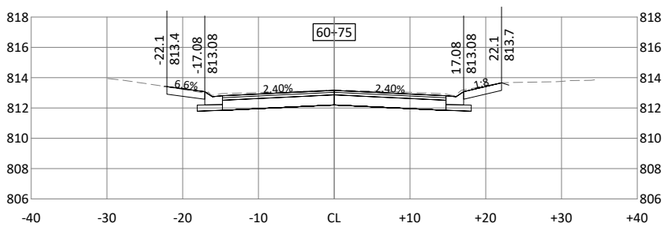


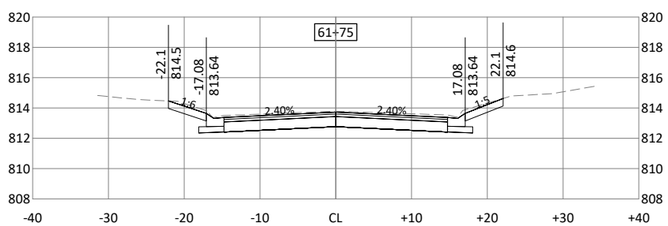


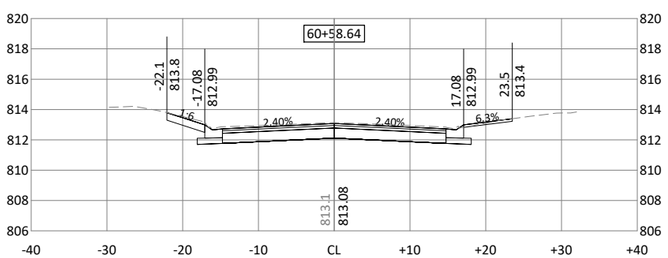


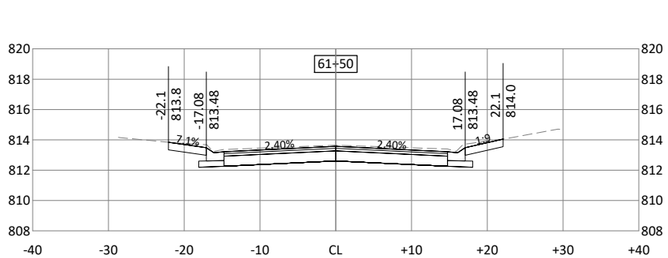


©Bolton & Menk, Inc. 2026. All Rights Reserved
H:\COT\24X\137045000\CAD\C3D\137045C801.dwg 2/25/2026 6:42:47 AM

HORZ. 0 10 20 SCALE FEET

VERT. 0 5 10 SCALE FEET

I HEREBY CERTIFY THAT THIS PLAN, SPECIFICATION, OR REPORT WAS PREPARED BY ME OR UNDER MY DIRECT SUPERVISION AND THAT I AM A DULY LICENSED PROFESSIONAL ENGINEER UNDER THE LAWS OF THE STATE OF MINNESOTA.

MICHAEL J BOEX
LIC. NO. 44576 DATE MM/DD/YYYY

BOLTON & MENK
3507 HIGH POINT DRIVE NORTH
BLDG. 1 - SUITE E130
OAKDALE, MN 55128
Phone: (651) 704-9970
Email: Oakdale@bolton-menk.com
www.bolton-menk.com

Cottage Grove
Where Pride and Prosperity Meet

| DESIGNED | ANO |
|---|---|
| DRAWN | BNM |
| CHECKED | MJB |
| CLIENT PROJ. NO. | 137045 |

| NO. | ISSUED FOR | DATE |
|---|---|---|
| | | |

CITY OF COTTAGE GROVE
2026 PAVEMENT MANAGEMENT PROJECT
CROSS SECTIONS - ISLE AVE

SHEET C8.22

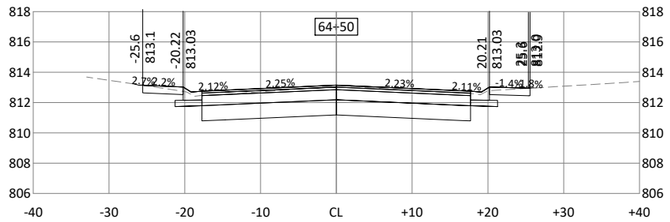


HORZ. 0 10 20 SCALE FEET

VERT. 0 5 10 SCALE FEET

I HEREBY CERTIFY THAT THIS PLAN, SPECIFICATION, OR REPORT WAS PREPARED BY ME OR UNDER MY DIRECT SUPERVISION AND THAT I AM A DULY LICENSED PROFESSIONAL ENGINEER UNDER THE LAWS OF THE STATE OF MINNESOTA.

MICHAEL J BOEX

LIC. NO. 44576 DATE MM/DD/YYYY


BOLTON & MENK

3507 HIGH POINT DRIVE NORTH
BLDG. 1 - SUITE E130
OAKDALE, MN 55128
Phone: (651) 704-9970
Email: Oakdale@bolton-menk.com
www.bolton-menk.com


Cottage Grove
Where Pride and Prosperity Meet

| | |
|---|---|
| DESIGNED | ANO |
| DRAWN | BNM |
| CHECKED | MJB |
| CLIENT PROJ. NO. | 137045 |

| NO. | ISSUED FOR | DATE |
|---|---|---|
| | | |

CITY OF COTTAGE GROVE

2026 PAVEMENT MANAGEMENT PROJECT

CROSS SECTIONS - ISLE AVE CDS

SHEET C8.23


©Bolton & Menk, Inc. 2026. All Rights Reserved
H:\COTT\24X\137045001\CAD\C3D\137045C801.dwg 2/25/2026 6:34:12 AM

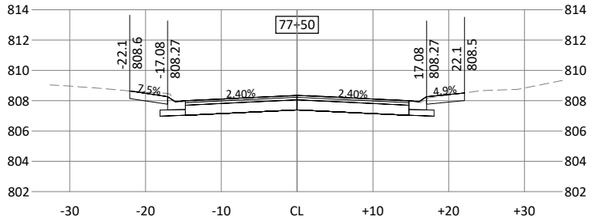


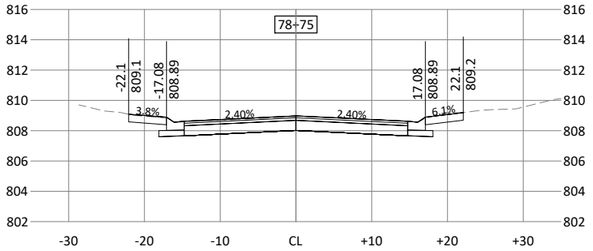


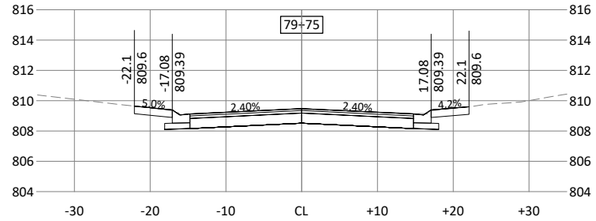


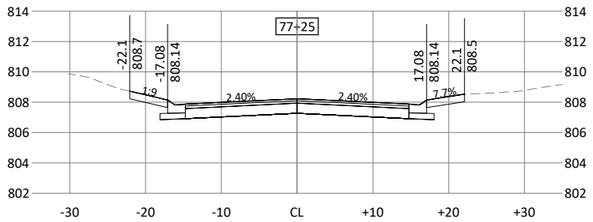


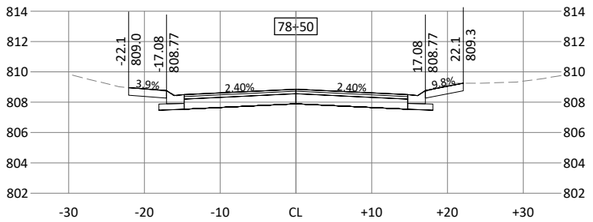


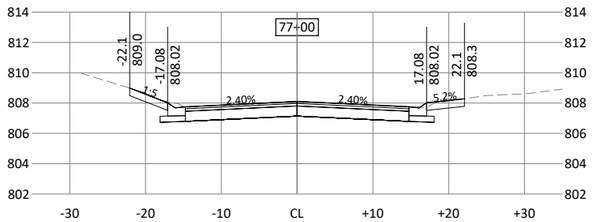


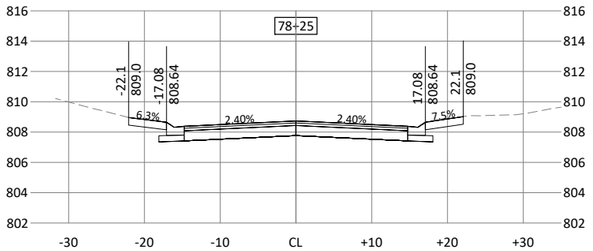


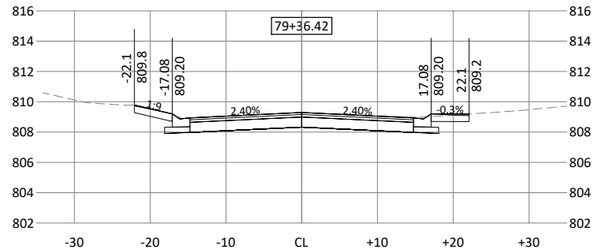


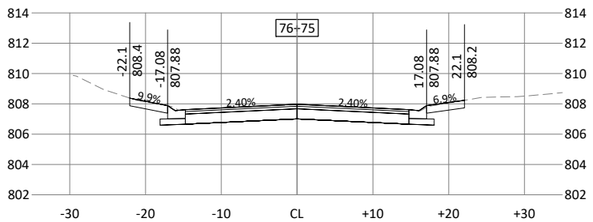


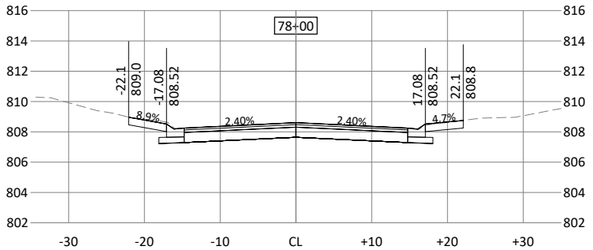


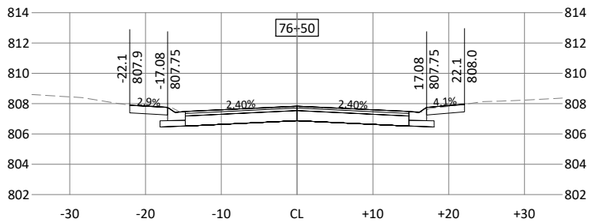


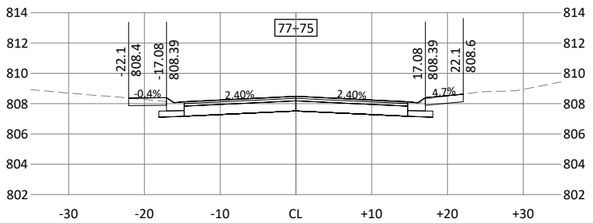


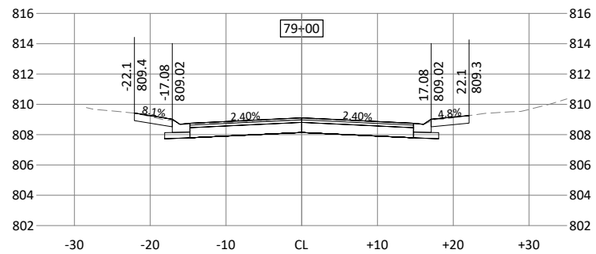


©Bolton & Menk, Inc. 2026. All Rights Reserved
H:\COTT\24X\13704500\CAD\C3D\13704SC801.dwg 2/25/2026 6:43:33 AM

HORZ. SCALE 0 10 20 FEET

VERT. SCALE 0 5 10 FEET

I HEREBY CERTIFY THAT THIS PLAN, SPECIFICATION, OR REPORT WAS PREPARED BY ME OR UNDER MY DIRECT SUPERVISION AND THAT I AM A DULY LICENSED PROFESSIONAL ENGINEER UNDER THE LAWS OF THE STATE OF MINNESOTA.

MICHAEL J BOEX
LIC. NO. 44576 DATE MM/DD/YYYY

BOLTON & MENK
3507 HIGH POINT DRIVE NORTH
BLDG. 1 - SUITE E130
OAKDALE, MN 55128
Phone: (651) 704-9970
Email: Oakdale@bolton-menk.com
www.bolton-menk.com

Cottage Grove
Where Pride and Prosperity Meet

| | |
|---|---|
| DESIGNED | ANO |
| DRAWN | BNM |
| CHECKED | MJB |
| CLIENT PROJ. NO. | 137045 |

| NO. | ISSUED FOR | DATE |
|---|---|---|
| | | |

CITY OF COTTAGE GROVE
2026 PAVEMENT MANAGEMENT PROJECT
CROSS SECTIONS - IRONWOOD AVE (SOUTH)

SHEET C8.24

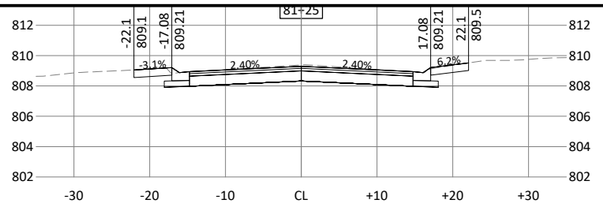


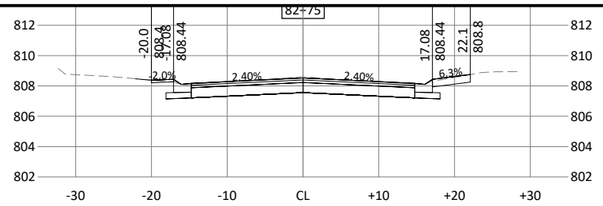


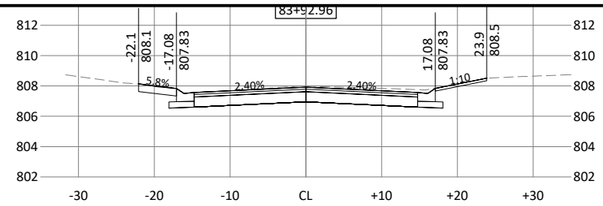


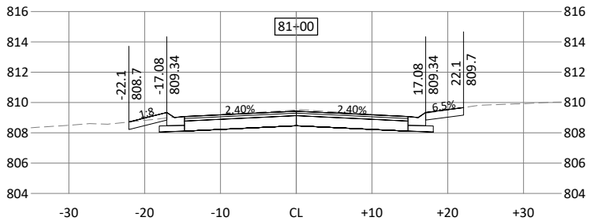


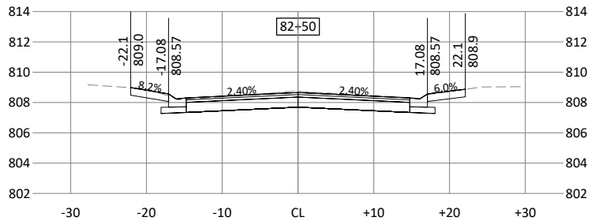


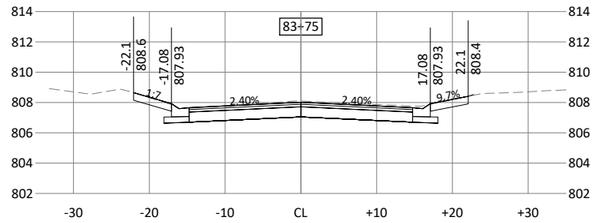


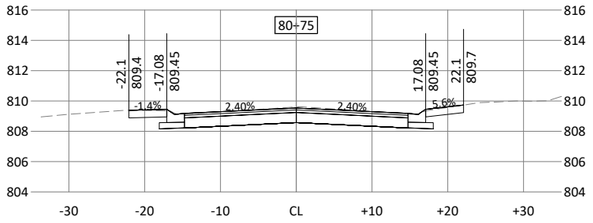


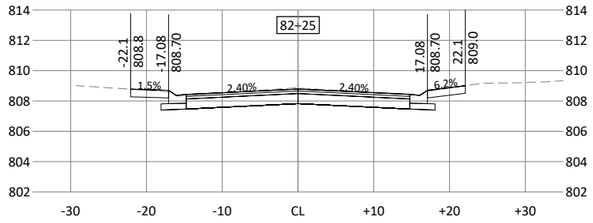


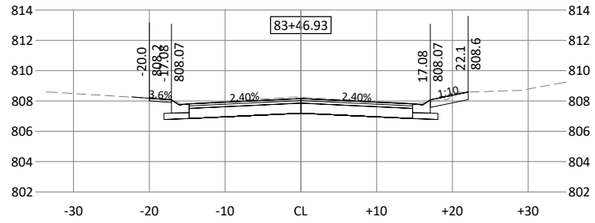


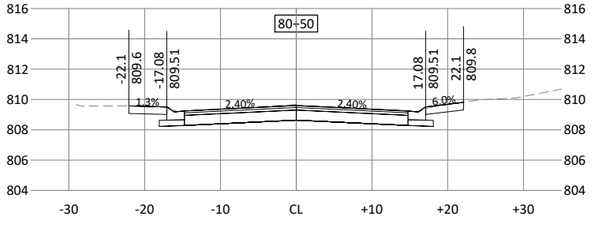


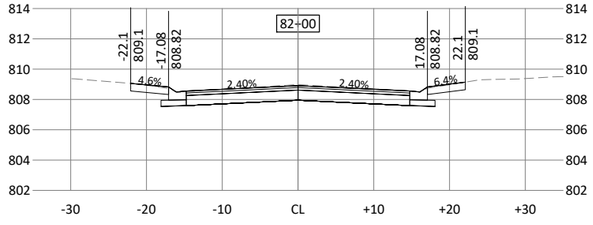


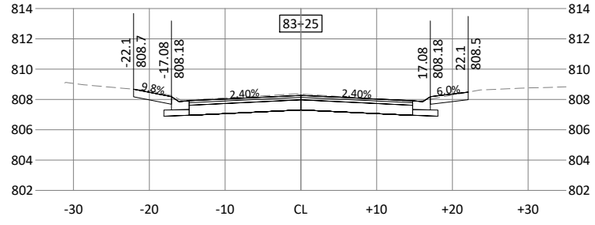


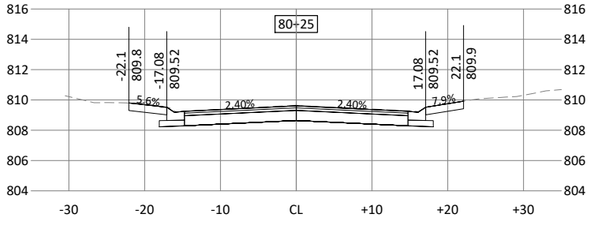


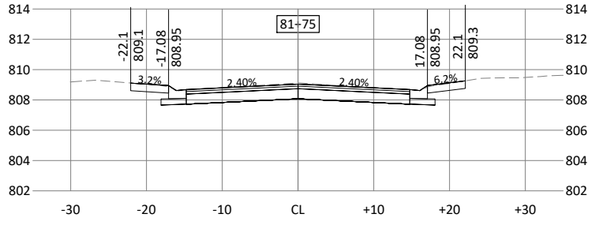


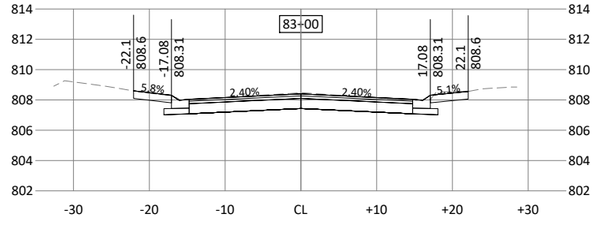


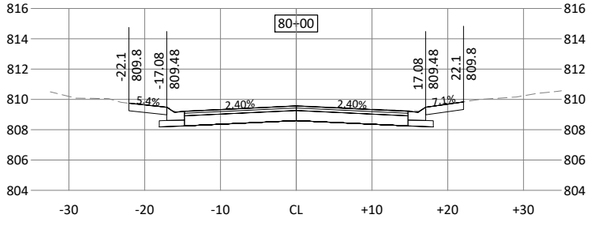


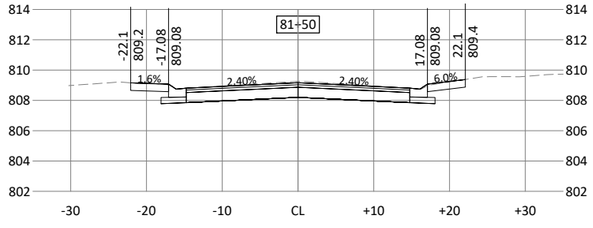


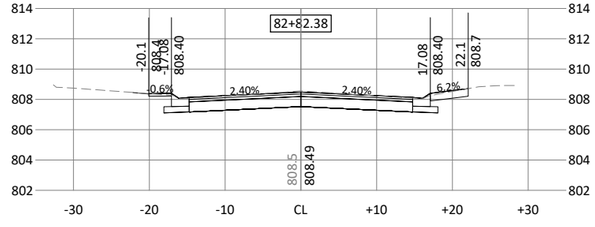


©Bolton & Menk, Inc. 2026. All Rights Reserved
H:\COTT\24X137045000\CAD\C3D\137045C801.dwg 2/25/2026 6:37:22 AM

HORZ. 0 10 20 SCALE FEET

VERT. 0 5 10 SCALE FEET

I HEREBY CERTIFY THAT THIS PLAN, SPECIFICATION, OR REPORT WAS PREPARED BY ME OR UNDER MY DIRECT SUPERVISION AND THAT I AM A DULY LICENSED PROFESSIONAL ENGINEER UNDER THE LAWS OF THE STATE OF MINNESOTA.

MICHAEL J BOEX
LIC. NO. 44576 DATE MM/DD/YYYY

BOLTON & MENK
3507 HIGH POINT DRIVE NORTH
BLDG. 1 - SUITE E130
OAKDALE, MN 55128
Phone: (651) 704-9970
Email: Oakdale@bolton-menk.com
www.bolton-menk.com

Cottage Grove
Where Pride and Prosperity Meet

| | |
|---|---|
| DESIGNED | ANO |
| DRAWN | BNM |
| CHECKED | MJB |
| CLIENT PROJ. NO. | 137045 |

| NO. | ISSUED FOR | DATE |
|---|---|---|
| | | |

CITY OF COTTAGE GROVE
2026 PAVEMENT MANAGEMENT PROJECT
CROSS SECTIONS - IRONWOOD AVE (SOUTH)

SHEET C8.25

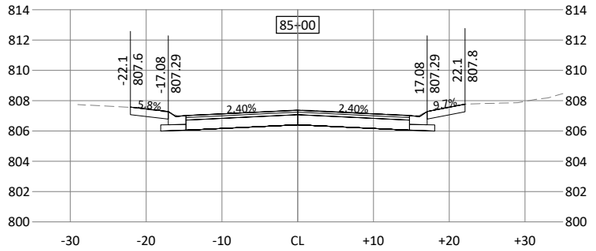


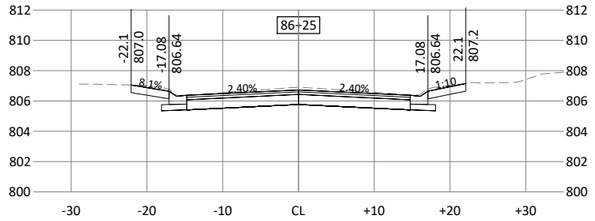


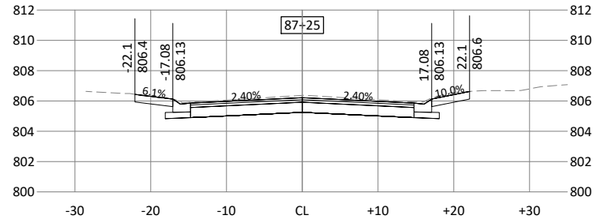


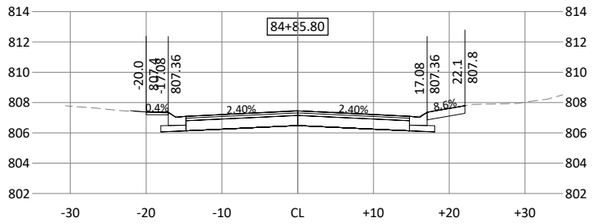


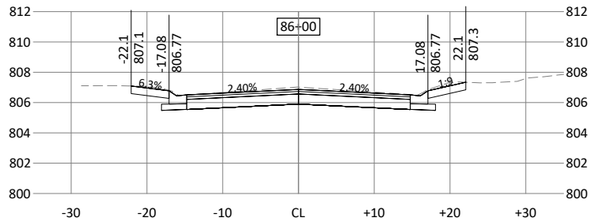


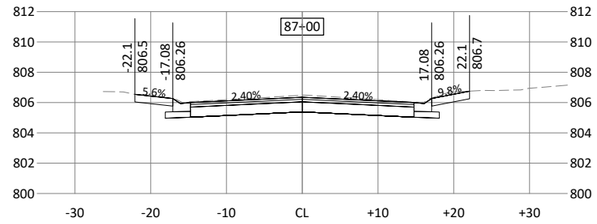


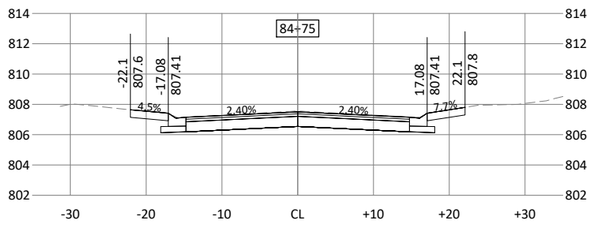


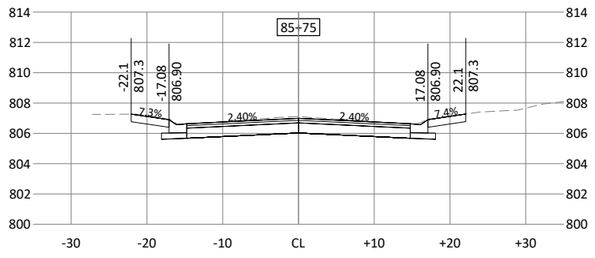


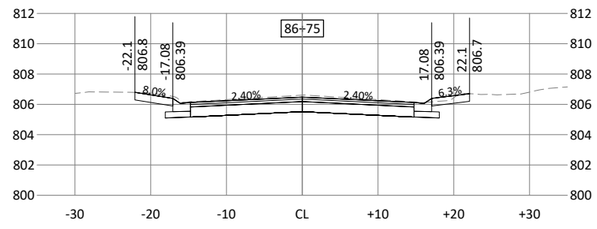


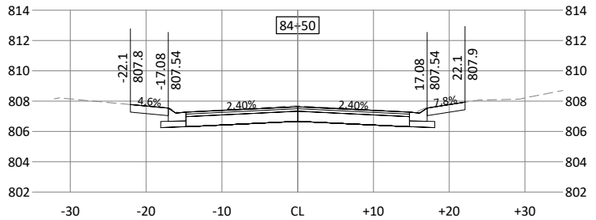


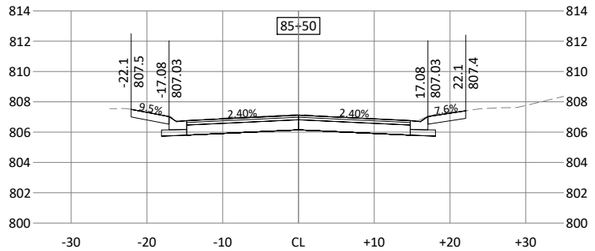


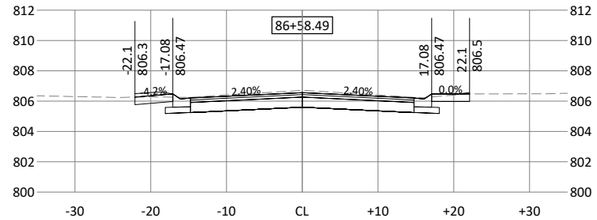


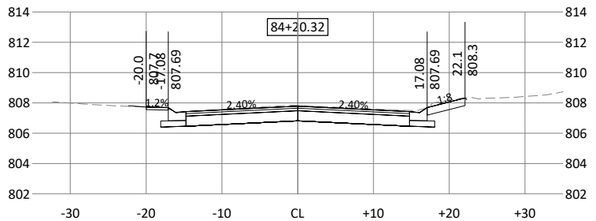


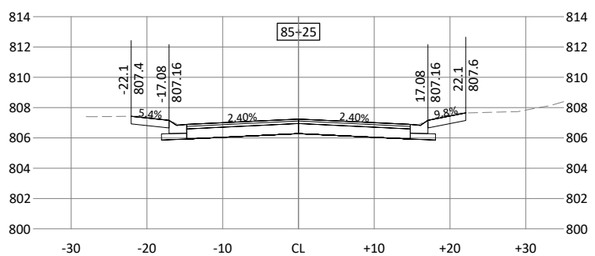


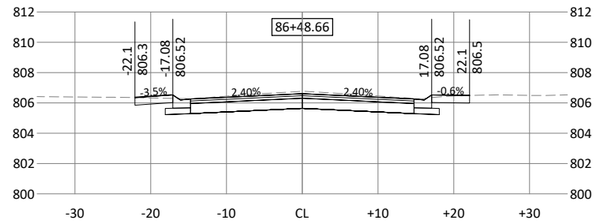


©Bolton & Menk, Inc. 2026. All Rights Reserved
H:\COTT\24X137045000\CAD\C3D\137045C801.dwg 2/25/2026 6:59:40 AM

HORZ. SCALE 0 10 20 FEET

VERT. SCALE 0 5 10 FEET

I HEREBY CERTIFY THAT THIS PLAN, SPECIFICATION, OR REPORT WAS PREPARED BY ME OR UNDER MY DIRECT SUPERVISION AND THAT I AM A DULY LICENSED PROFESSIONAL ENGINEER UNDER THE LAWS OF THE STATE OF MINNESOTA.

MICHAEL J BOEX
LIC. NO. 44576 DATE MM/DD/YYYY

BOLTON & MENK
3507 HIGH POINT DRIVE NORTH
BLDG. 1 - SUITE E130
OAKDALE, MN 55128
Phone: (651) 704-9970
Email: Oakdale@bolton-menk.com
www.bolton-menk.com

Cottage Grove
Where Pride and Prosperity Meet

| DESIGNED | NO. | ISSUED FOR | DATE |
|---|---|---|---|
| ANO | | | |
| DRAWN | | | |
| BNM | | | |
| CHECKED | | | |
| MJB | | | |
| CLIENT PROJ. NO. | | | |
| 137045 | | | |

CITY OF COTTAGE GROVE
2026 PAVEMENT MANAGEMENT PROJECT
CROSS SECTIONS - IRONWOOD AVE (SOUTH)

SHEET C8.26

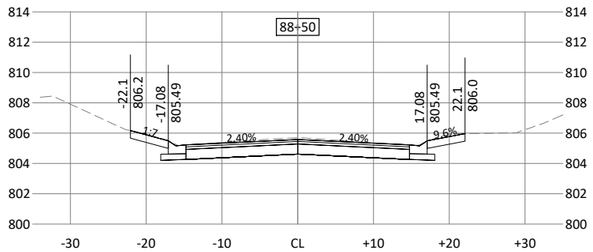


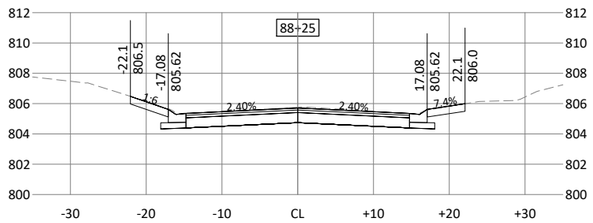


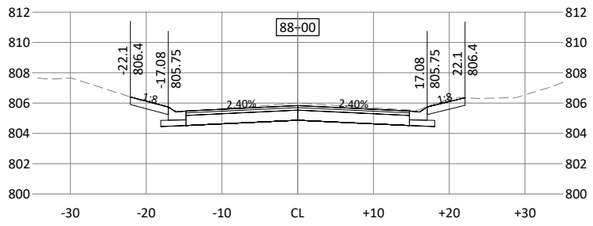


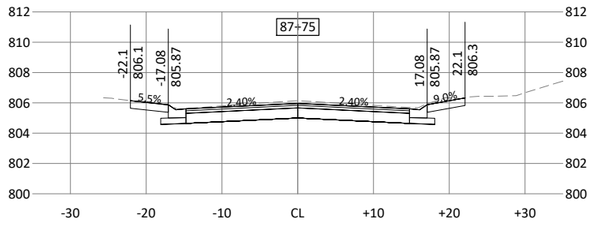


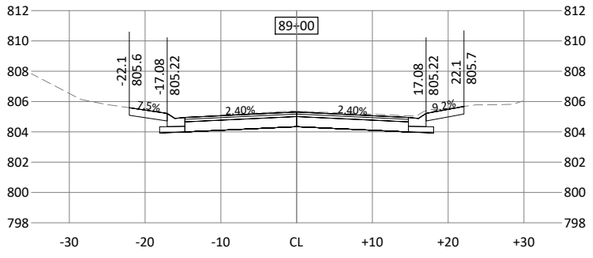


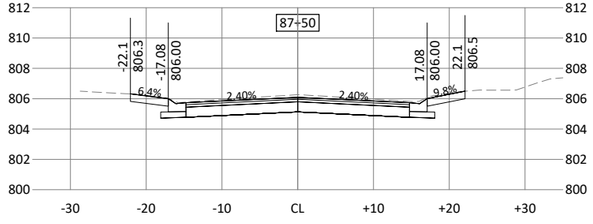


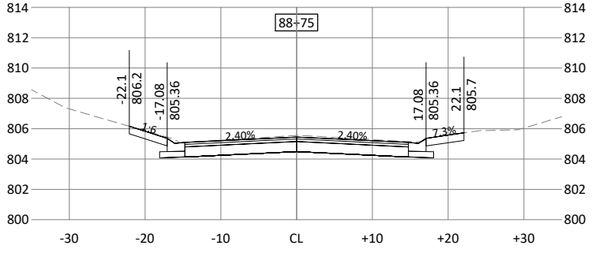


©Bolton & Menk, Inc. 2026. All Rights Reserved
H:\COTT\24x13\7045000\CAD\C3D\137045C801.dwg 2/25/2026 6:35:44 AM

HORZ. 0 10 20 SCALE FEET

VERT. 0 5 10 SCALE FEET

I HEREBY CERTIFY THAT THIS PLAN, SPECIFICATION, OR REPORT WAS PREPARED BY ME OR UNDER MY DIRECT SUPERVISION AND THAT I AM A DULY LICENSED PROFESSIONAL ENGINEER UNDER THE LAWS OF THE STATE OF MINNESOTA.

MICHAEL J BOEK
LIC. NO. 44576 DATE MM/DD/YYYY

BOLTON & MENK
3507 HIGH POINT DRIVE NORTH
BLDG. 1 - SUITE E130
OAKDALE, MN 55128
Phone: (651) 704-9970
Email: Oakdale@bolton-menk.com
www.bolton-menk.com

Cottage Grove
Where Pride and Prosperity Meet

| DESIGNED | ANO |
|---|---|
| DRAWN | BNM |
| CHECKED | MJB |
| CLIENT PROJ. NO. | 137045 |

| NO. | ISSUED FOR | DATE |
|---|---|---|

CITY OF COTTAGE GROVE
2026 PAVEMENT MANAGEMENT PROJECT
CROSS SECTIONS - IRONWOOD AVE (SOUTH)

SHEET C8.27

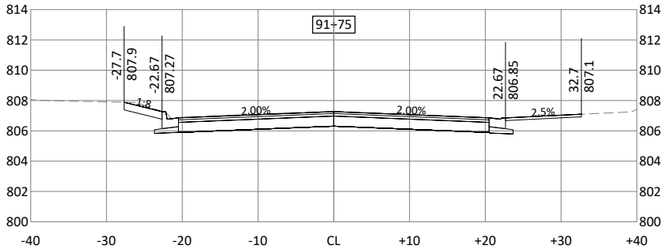


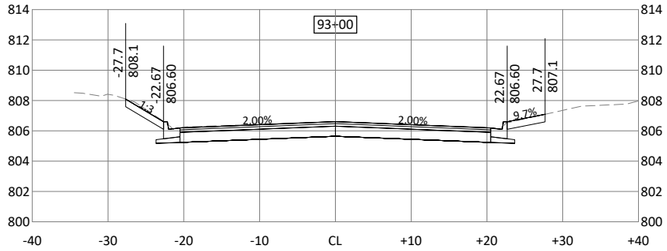


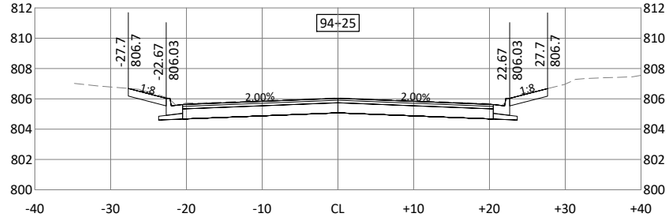


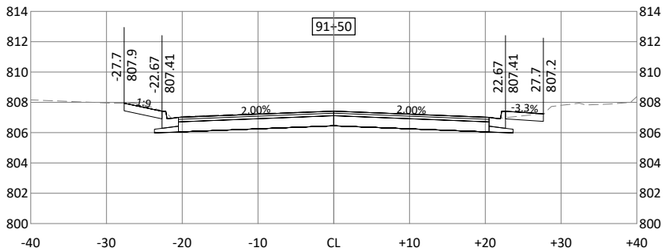


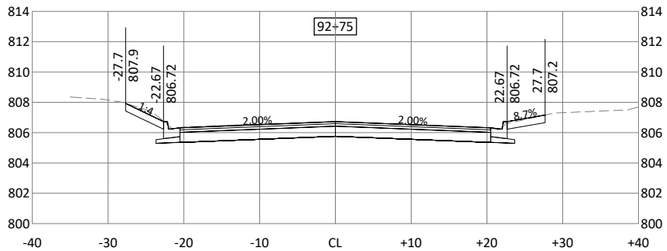


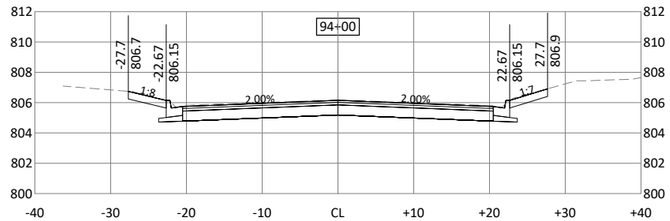


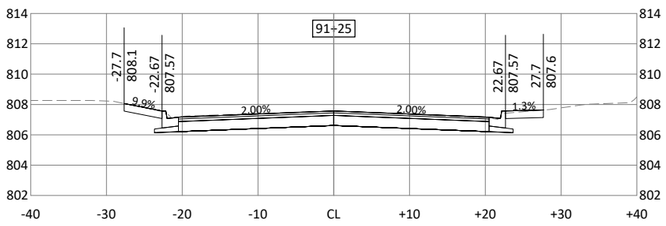


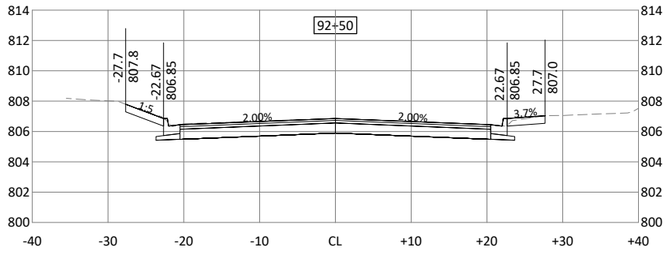


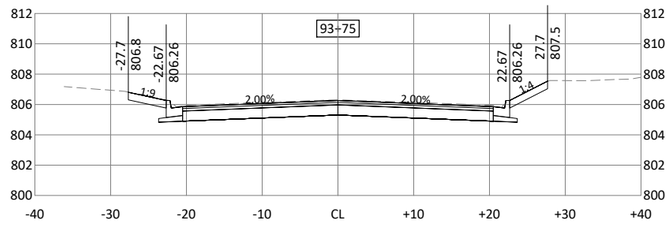


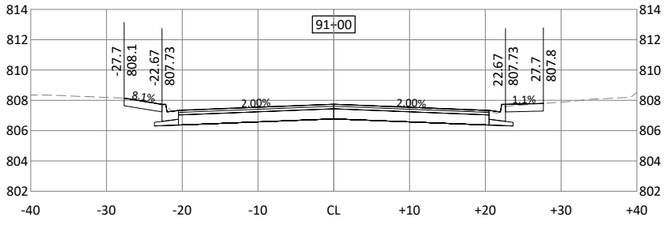


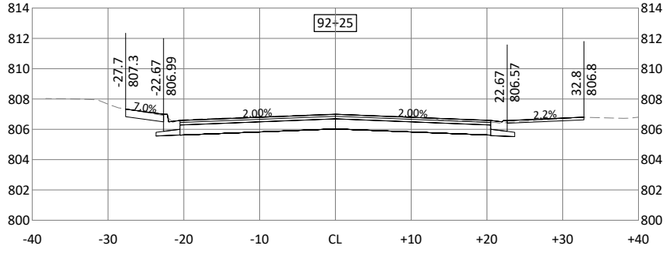


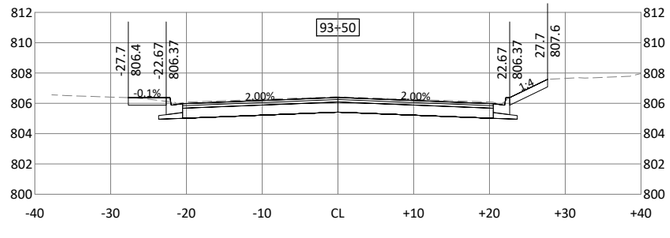


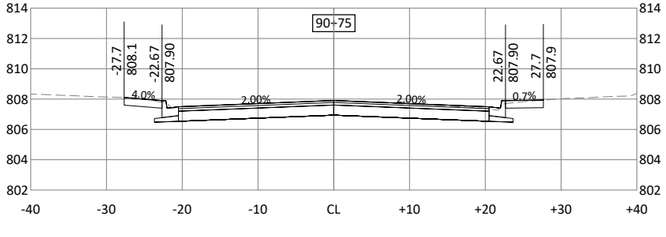


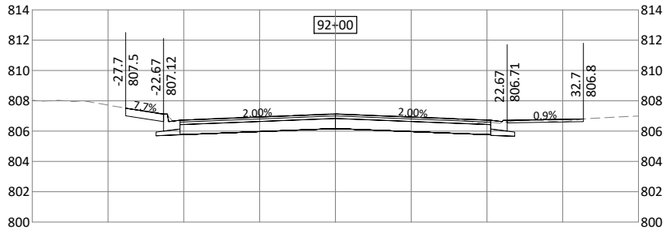


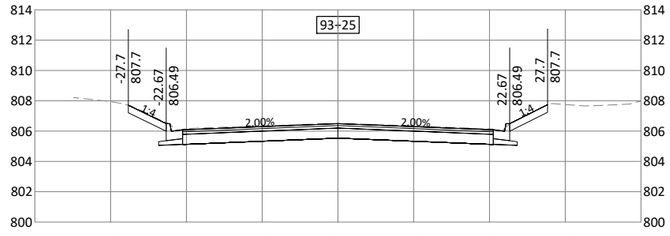


©Bolton & Menk, Inc. 2026, All Rights Reserved
H:\COT_2AX\137045000\CAD\C3D\137045C801.dwg 2/25/2026 6:31:02 AM

HORZ. SCALE 0 10 20 FEET

VERT. SCALE 0 5 10 FEET

I HEREBY CERTIFY THAT THIS PLAN, SPECIFICATION, OR REPORT WAS PREPARED BY ME OR UNDER MY DIRECT SUPERVISION AND THAT I AM A DULY LICENSED PROFESSIONAL ENGINEER UNDER THE LAWS OF THE STATE OF MINNESOTA.

MICHAEL J BOEX
LIC. NO. 44576 DATE MM/DD/YYYY

BOLTON & MENK
3507 HIGH POINT DRIVE NORTH
BLDG. 1 - SUITE E130
OAKDALE, MN 55128
Phone: (651) 704-9970
Email: Oakdale@bolton-menk.com
www.bolton-menk.com

Cottage Grove
Where Pride and Prosperity Meet

| DESIGNED | ANO |
|---|---|
| DRAWN | BNM |
| CHECKED | MJB |
| CLIENT PROJ. NO. | 137045 |

| NO. | ISSUED FOR | DATE |
|---|---|---|
| | | |

CITY OF COTTAGE GROVE
2026 PAVEMENT MANAGEMENT PROJECT
CROSS SECTIONS - 90TH ST

SHEET C8.28

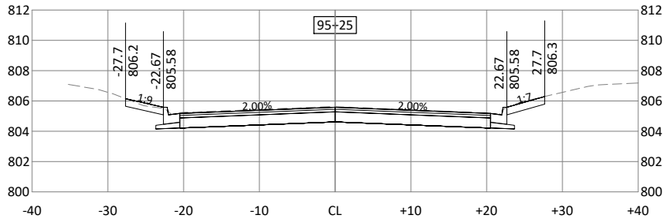


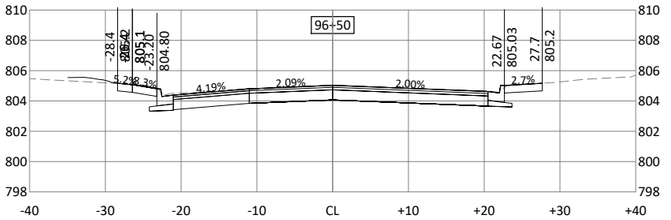


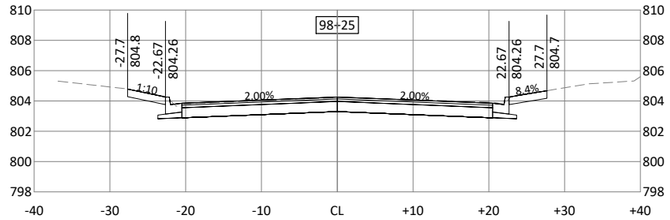


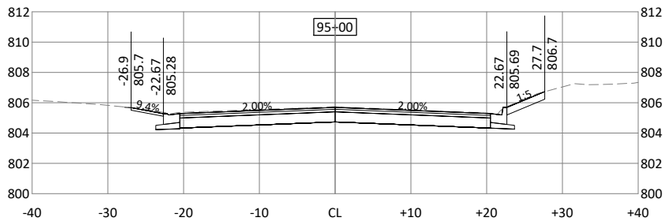


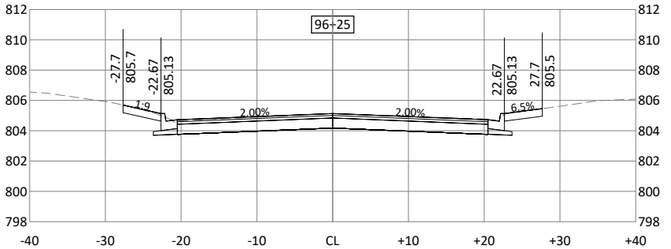


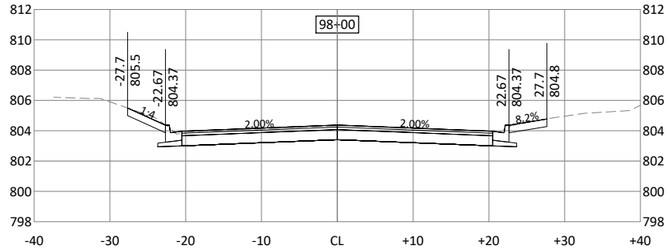


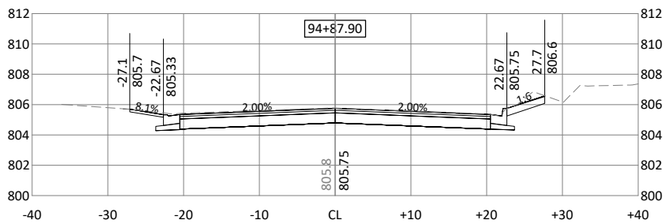


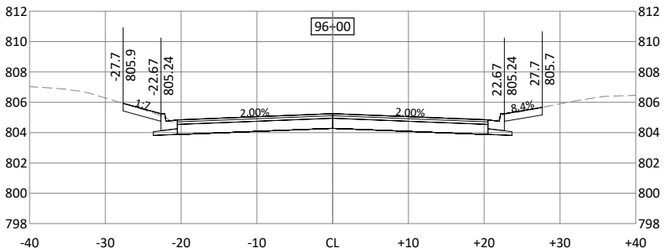


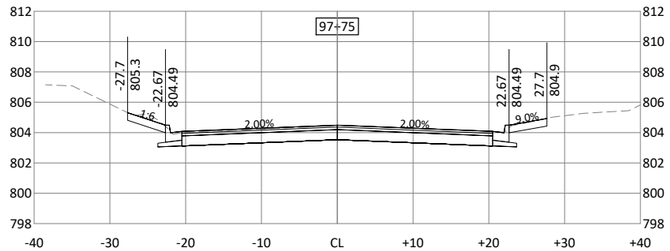


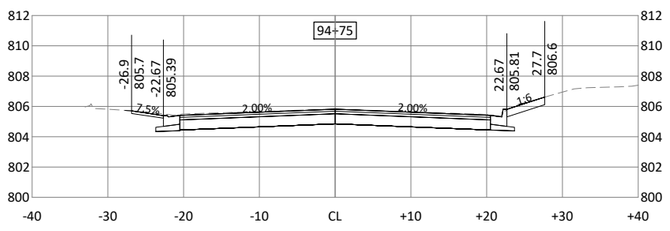


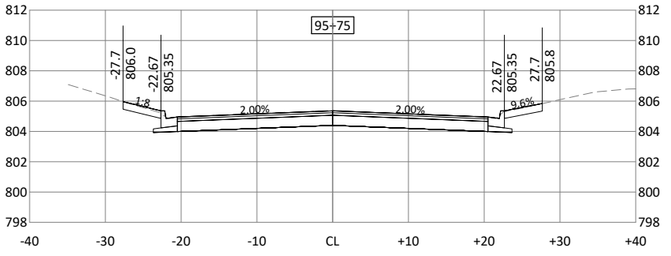


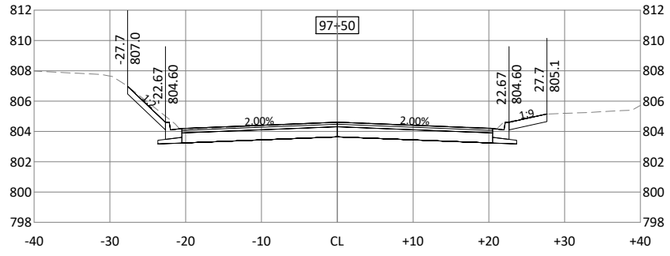


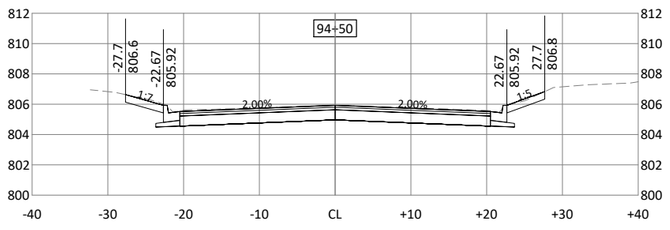


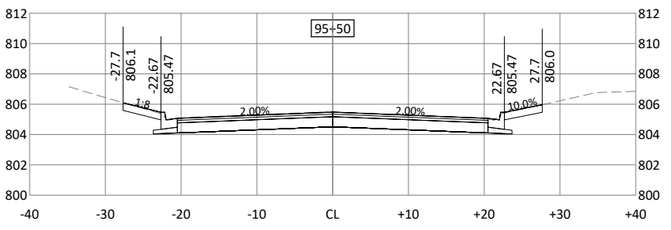


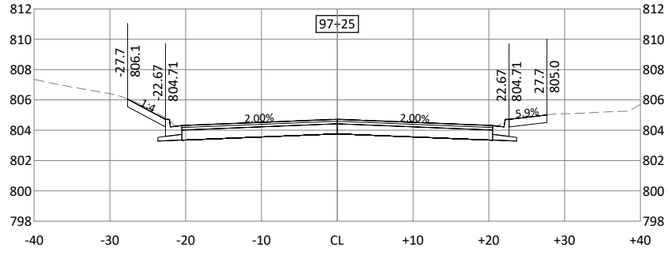


©Bolton & Menk, Inc. 2026. All Rights Reserved
H:\CDTT\24X\137045001\CAD\C3D\137045C801.dwg 2/25/2026 6:33:39 AM

HORZ. SCALE 0 10 20 FEET

VERT. SCALE 0 5 10 FEET

I HEREBY CERTIFY THAT THIS PLAN, SPECIFICATION, OR REPORT WAS PREPARED BY ME OR UNDER MY DIRECT SUPERVISION AND THAT I AM A DULY LICENSED PROFESSIONAL ENGINEER UNDER THE LAWS OF THE STATE OF MINNESOTA.

MICHAEL J BOEX
LIC. NO. 44576 DATE MM/DD/YYYY

BOLTON & MENK
3507 HIGH POINT DRIVE NORTH
BLDG. 1 - SUITE E130
OAKDALE, MN 55128
Phone: (651) 704-9970
Email: Oakdale@bolton-menk.com
www.bolton-menk.com

Cottage Grove
Where Pride and Prosperity Meet

| DESIGNED | ANO |
|---|---|
| DRAWN | BNM |
| CHECKED | MJB |
| CLIENT PROJ. NO. | 137045 |

| NO. | ISSUED FOR | DATE |
|---|---|---|

CITY OF COTTAGE GROVE
2026 PAVEMENT MANAGEMENT PROJECT
CROSS SECTIONS - 90TH ST

SHEET C8.29

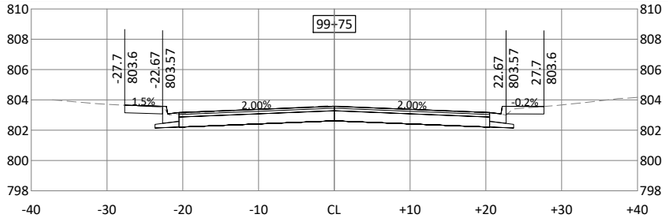


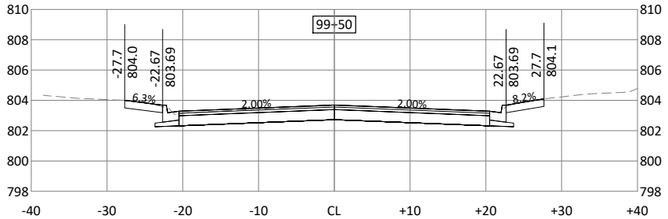


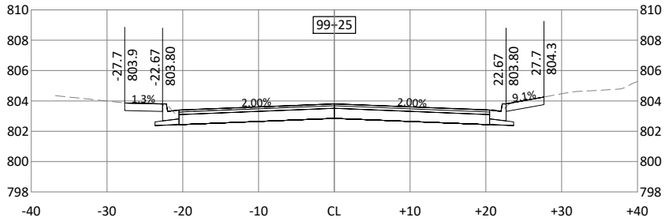


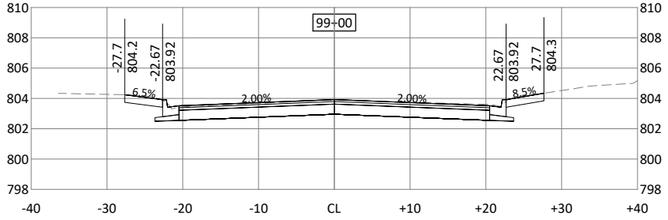


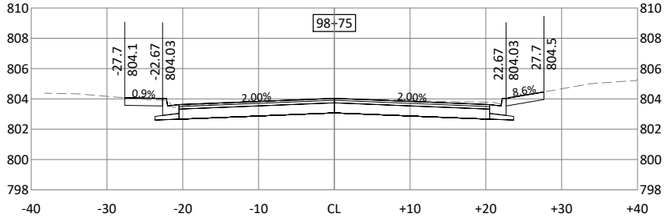


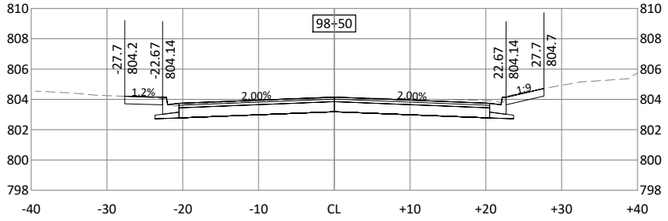


©Bolton & Menk, Inc. 2026, All Rights Reserved
H:\COTT\24X137045000\CAD\C3D\137045C801.dwg 2/25/2026 7:07:08 AM

HORZ. 0 10 20 SCALE FEET

VERT. 0 5 10 SCALE FEET

I HEREBY CERTIFY THAT THIS PLAN, SPECIFICATION, OR REPORT WAS PREPARED BY ME OR UNDER MY DIRECT SUPERVISION AND THAT I AM A DULY LICENSED PROFESSIONAL ENGINEER UNDER THE LAWS OF THE STATE OF MINNESOTA.

MICHAEL J BOEX

LIC. NO. 44576 DATE MM/DD/YYYY

BOLTON & MENK
3507 HIGH POINT DRIVE NORTH
BLDG. 1 - SUITE E130
OAKDALE, MN 55128
Phone: (651) 704-9970
Email: Oakdale@bolton-menk.com
www.bolton-menk.com

Cottage Grove
Where Pride and Prosperity Meet

| DESIGNED | NO. | ISSUED FOR | DATE |
|---|---|---|---|
| ANO | | | |
| DRAWN | | | |
| BNM | | | |
| CHECKED | | | |
| MJB | | | |
| CLIENT PROJ. NO. | | | |
| 137045 | | | |

CITY OF COTTAGE GROVE
2026 PAVEMENT MANAGEMENT PROJECT
CROSS SECTIONS - 90TH ST

SHEET
C8.30

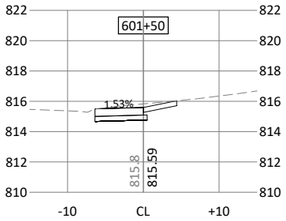


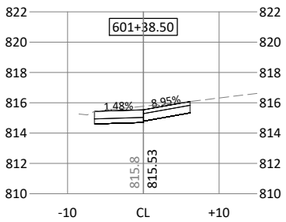


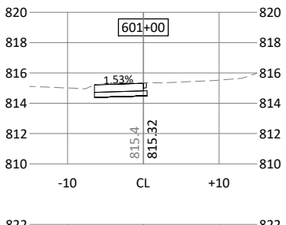


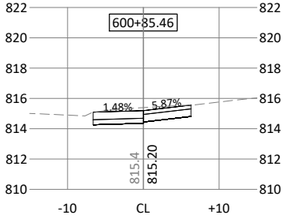


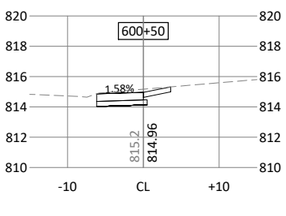


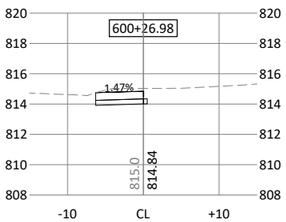


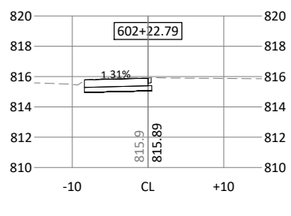


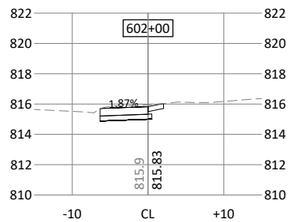


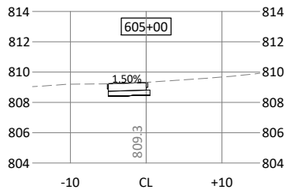


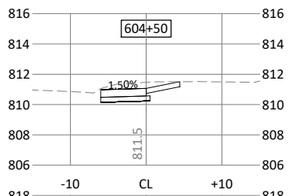


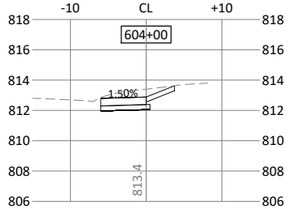


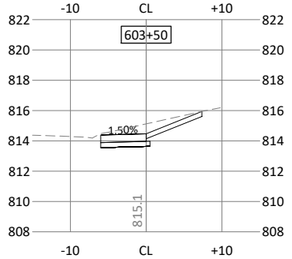


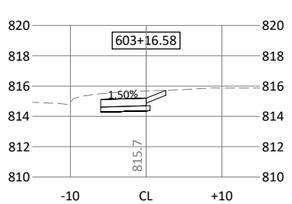


©Bolton & Menk, Inc. 2026. All Rights Reserved
H:\COTT\2AX\137045000\CAD\C3D\137045C801.dwg 2/25/2026 6:58:43 AM

HORZ. 0 10 20 SCALE FEET

VERT. 0 5 10 SCALE FEET

I HEREBY CERTIFY THAT THIS PLAN, SPECIFICATION, OR REPORT WAS PREPARED BY ME OR UNDER MY DIRECT SUPERVISION AND THAT I AM A DULY LICENSED PROFESSIONAL ENGINEER UNDER THE LAWS OF THE STATE OF MINNESOTA.

MICHAEL J BOEX
LIC. NO. 44576 DATE MM/DD/YYYY

BOLTON & MENK
3507 HIGH POINT DRIVE NORTH
BLDG. 1 - SUITE E130
OAKDALE, MN 55128
Phone: (651) 704-9970
Email: Oakdale@bolton-menk.com
www.bolton-menk.com

Cottage Grove
Where Pride and Prosperity Meet

| | |
|---|---|
| DESIGNED | ANO |
| DRAWN | BNM |
| CHECKED | MJB |
| CLIENT PROJ. NO. | 137045 |

| NO. | ISSUED FOR | DATE |
|---|---|---|
| | | |

CITY OF COTTAGE GROVE
2026 PAVEMENT MANAGEMENT PROJECT
CROSS SECTIONS - HILLSIDE TR SIDEWALK

SHEET C8.31

LEGEND:

- [M] STREET LIGHTING SERVICE CABINET
- [H] HAND HOLE
- 1 1/2" NMC CONDUIT WITH 2-1/C #6 AND 1-1/C #6 EGC

NOTES

1. EXISTING LIGHT POLES AND FOUNDATIONS TO REMAIN IN PLACE UNLESS OTHERWISE NOTED. LIGHTING UNITS ARE TYPICALLY BEHIND SIDEWALK.
2. THE CONTRACTOR IS RESPONSIBLE FOR COORDINATING THE CONNECTION OF POWER FOR THE LIGHTING SYSTEM WITH CITY OF COTTAGE GROVE
3. INSTALL NEW 1.5" SCH 40 PVC CONDUIT, EXCEPT CONDUIT INSTALLED BY DIRECTIONAL DRILL METHODS MAY BE EITHER PVC OR HDPE, UNLESS OTHERWISE NOTED.
4. BID ITEMS PROVIDED FOR HANDHOLES, CONDUITS, AND CONDUCTORS TO BE USED AT LOCATIONS AS APPROVED BY ENGINEER. ANTICIPATE ALL CONDUITS WILL NEED TO BE DIRECTIONALLY DRILLED.

Inwood Ave S
Ira Ave
Ironwood Ave S
Irish Ave Court
Isle Ave
Hillside Trail
88th Street

A13 A12 A11 A10 A9 A8 A7 A6 A5 A4 A3 A2 A1 B3
A22 A21 A20 A19 A18 A17 A16 A15
HH 1 HH 2 HH 3 HH 5 HH 6
EX HH
EXISTING LIGHTING CABINET A
CONNECT TO EXISTING HANDHOLE
APPROXIMATE LOCATION OF EXISTING LIGHTING CONDUCTORS

SEE SHEET E1.02

©Bolton & Menk, Inc. 2026, All Rights Reserved
H:\COTT\24X\13704500\CAD\C3D\137045E101.dwg 2/25/2026 6:29:31 AM

HORZ. SCALE 0 50 100 FEET

I HEREBY CERTIFY THAT THIS PLAN, SPECIFICATION, OR REPORT WAS PREPARED BY ME OR UNDER MY DIRECT SUPERVISION AND THAT I AM A DULY LICENSED PROFESSIONAL ENGINEER UNDER THE LAWS OF THE STATE OF MINNESOTA.
MICHAEL J BOEX
LIC. NO. 44576 DATE MM/DD/YYYY

BOLTON & MENK
3507 HIGH POINT DRIVE NORTH
BLDG. 1 - SUITE E130
OAKDALE, MN 55128
Phone: (651) 704-9970
Email: Oakdale@bolton-menk.com
www.bolton-menk.com

Cottage Grove — Where Pride and Prosperity Meet

| DESIGNED | ANO |
|---|---|
| DRAWN | BNM |
| CHECKED | MJB |
| CLIENT PROJ. NO. | 137045 |

| NO. | ISSUED FOR | DATE |
|---|---|---|

CITY OF COTTAGE GROVE
2026 PAVEMENT MANAGEMENT PROJECT
STREET LIGHTING

SHEET E1.01

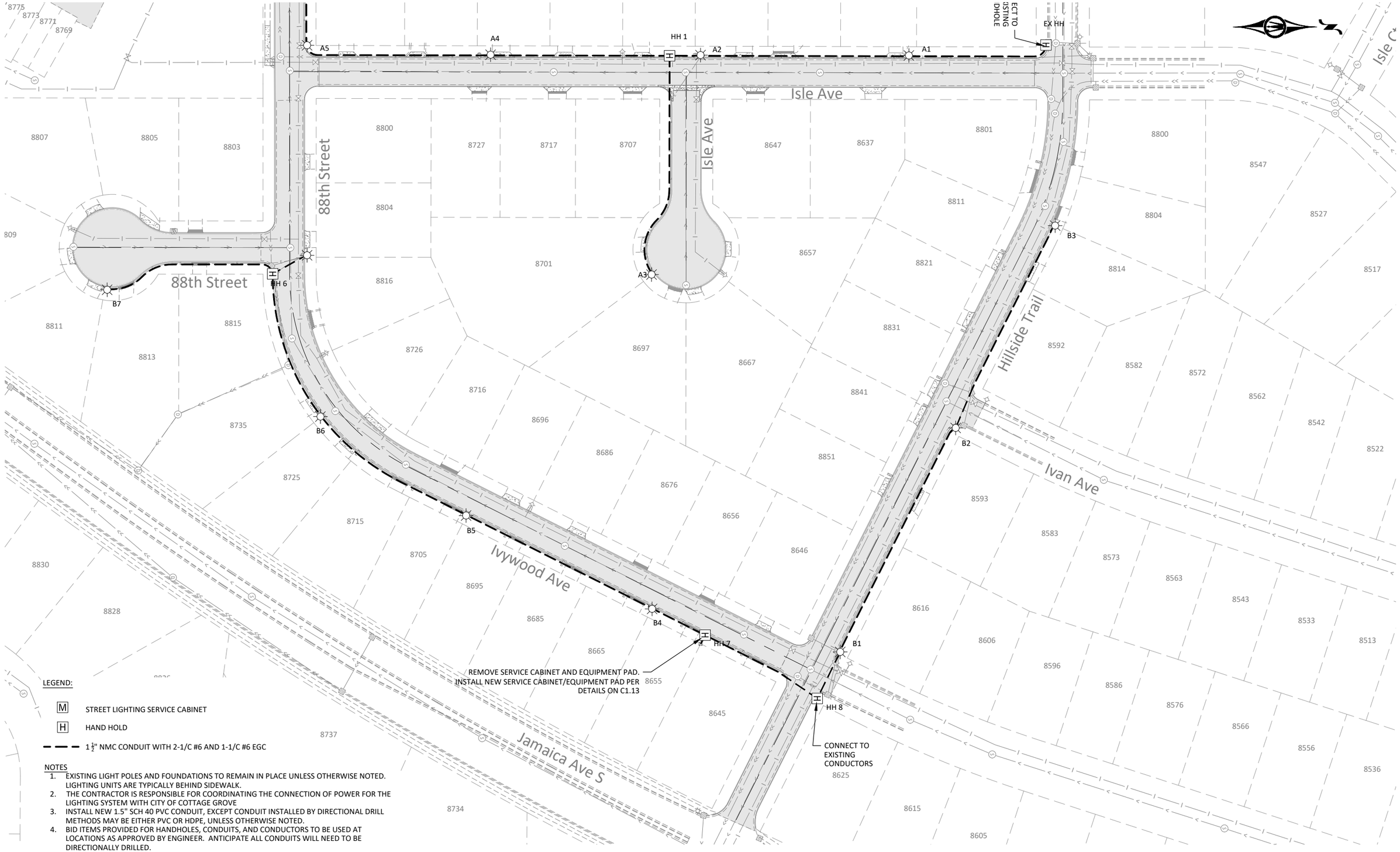


LEGEND:

- M — STREET LIGHTING SERVICE CABINET
- H — HAND HOLD
- 1 1/2" NMC CONDUIT WITH 2-1/C #6 AND 1-1/C #6 EGC

NOTES

1. EXISTING LIGHT POLES AND FOUNDATIONS TO REMAIN IN PLACE UNLESS OTHERWISE NOTED. LIGHTING UNITS ARE TYPICALLY BEHIND SIDEWALK.
2. THE CONTRACTOR IS RESPONSIBLE FOR COORDINATING THE CONNECTION OF POWER FOR THE LIGHTING SYSTEM WITH CITY OF COTTAGE GROVE
3. INSTALL NEW 1.5" SCH 40 PVC CONDUIT, EXCEPT CONDUIT INSTALLED BY DIRECTIONAL DRILL METHODS MAY BE EITHER PVC OR HDPE, UNLESS OTHERWISE NOTED.
4. BID ITEMS PROVIDED FOR HANDHOLES, CONDUITS, AND CONDUCTORS TO BE USED AT LOCATIONS AS APPROVED BY ENGINEER. ANTICIPATE ALL CONDUITS WILL NEED TO BE DIRECTIONALLY DRILLED.

© Bolton & Menk, Inc. 2026, All Rights Reserved
H:\COTT\24X137045000\CAD\C3D\137045E101.dwg 2/25/2026 6:36:56 AM

HORZ. 0 50 100
SCALE FEET

I HEREBY CERTIFY THAT THIS PLAN, SPECIFICATION, OR REPORT WAS PREPARED BY ME OR UNDER MY DIRECT SUPERVISION AND THAT I AM A DULY LICENSED PROFESSIONAL ENGINEER UNDER THE LAWS OF THE STATE OF MINNESOTA.

MICHAEL J BOEX
LIC. NO. 44576 DATE MM/DD/YYYY

BOLTON & MENK
3507 HIGH POINT DRIVE NORTH
BLDG. 1 - SUITE E130
OAKDALE, MN 55128
Phone: (651) 704-9970
Email: Oakdale@bolton-menk.com
www.bolton-menk.com

Cottage Grove
Where Pride and Prosperity Meet

| | |
|---|---|
| DESIGNED | ANO |
| DRAWN | BNM |
| CHECKED | MJB |
| CLIENT PROJ. NO. | 137045 |

| NO. | ISSUED FOR | DATE |
|---|---|---|

CITY OF COTTAGE GROVE
2026 PAVEMENT MANAGEMENT PROJECT
STREET LIGHTING

SHEET E1.02

LEGEND:

- M — STREET LIGHTING SERVICE CABINET
- H — NEW HAND HOLD
- — — — 1 ½" NMC CONDUIT WITH 2-1/C #6 AND 1-1/C #6 EGC
- — — — EX 1 ½" NMC CONDUIT WITH NEW 2-1/C #6 AND 1-1/C #6 EGC

NOTES

1. EXISTING LIGHT POLES AND FOUNDATIONS TO REMAIN IN PLACE UNLESS OTHERWISE NOTED. LIGHTING UNITS ARE TYPICALLY BEHIND SIDEWALK.
2. THE CONTRACTOR IS RESPONSIBLE FOR COORDINATING THE CONNECTION OF POWER FOR THE LIGHTING SYSTEM WITH CITY OF COTTAGE GROVE
3. INSTALL NEW 1.5" SCH 40 PVC CONDUIT, EXCEPT CONDUIT INSTALLED BY DIRECTIONAL DRILL METHODS MAY BE EITHER PVC OR HDPE, UNLESS OTHERWISE NOTED.
4. BID ITEMS PROVIDED FOR HANDHOLES, CONDUITS, AND CONDUCTORS TO BE USED AT LOCATIONS AS APPROVED BY ENGINEER. ANTICIPATE ALL CONDUITS WILL NEED TO BE DIRECTIONALLY DRILLED.

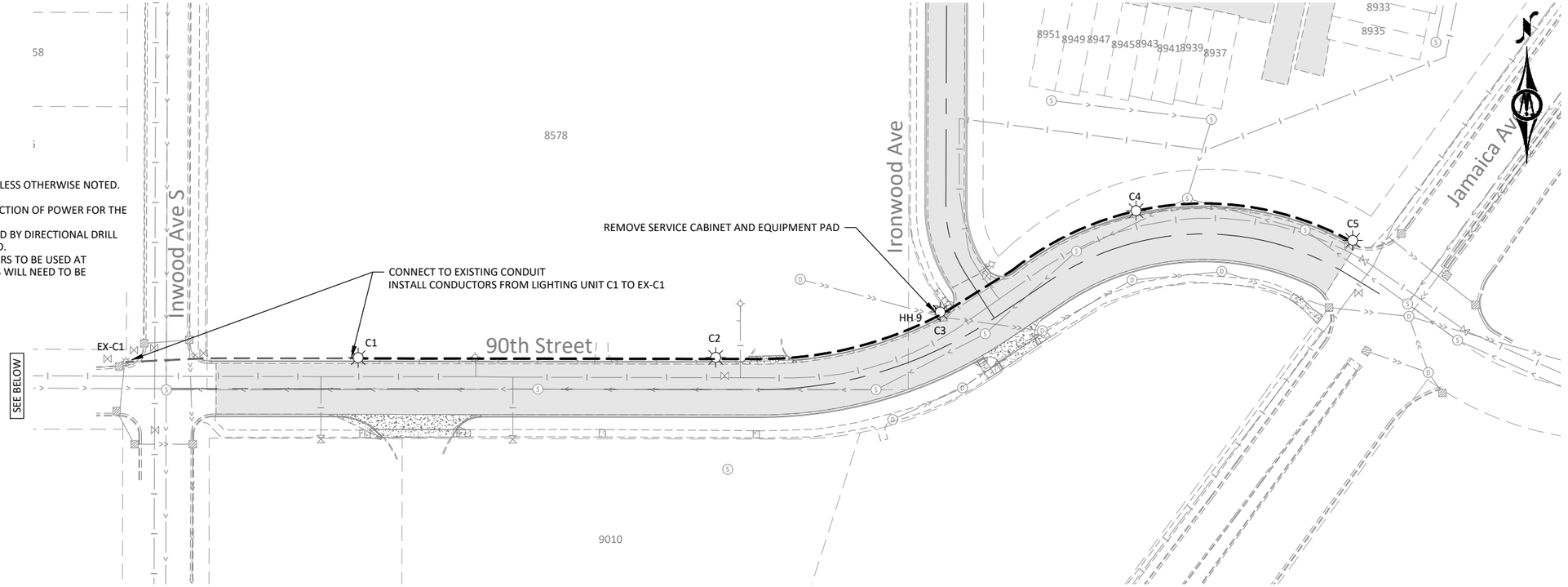


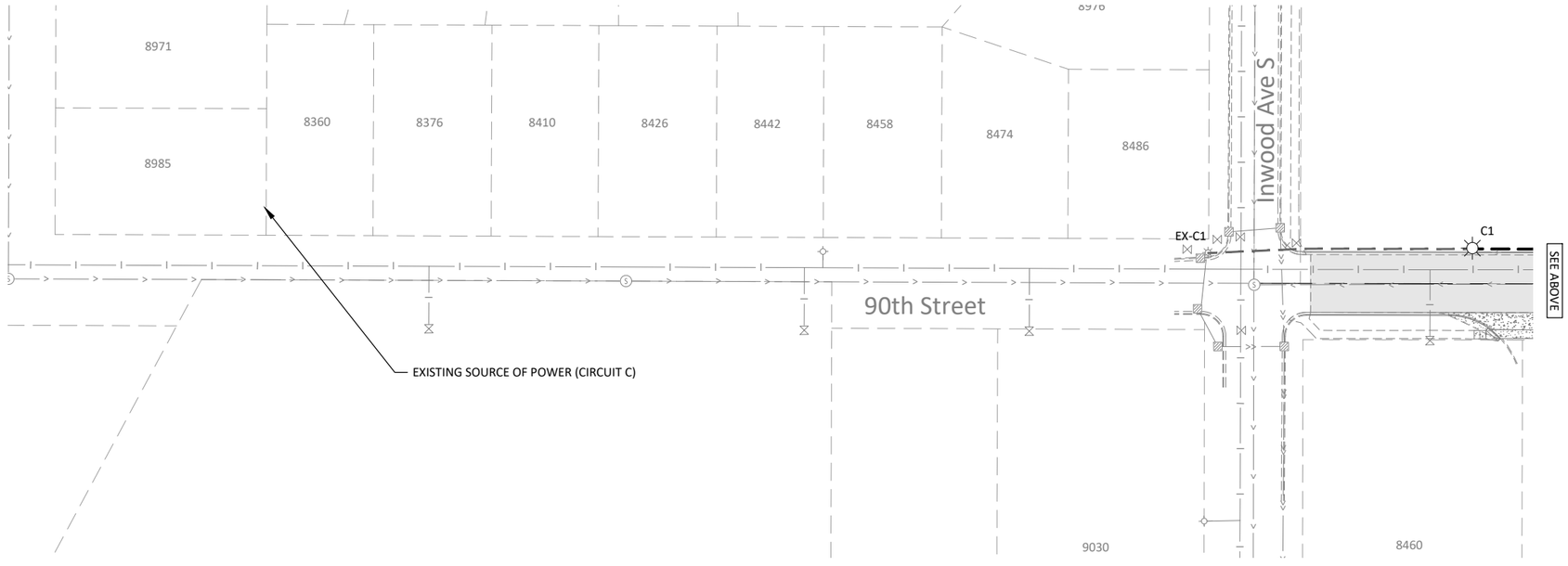


HORZ. SCALE 0 50 100 FEET

I HEREBY CERTIFY THAT THIS PLAN, SPECIFICATION, OR REPORT WAS PREPARED BY ME OR UNDER MY DIRECT SUPERVISION AND THAT I AM A DULY LICENSED PROFESSIONAL ENGINEER UNDER THE LAWS OF THE STATE OF MINNESOTA.

MICHAEL J BOEX
LIC. NO. 44576 DATE MM/DD/YYYY


BOLTON & MENK
3507 HIGH POINT DRIVE NORTH
BLDG. 1 - SUITE E130
OAKDALE, MN 55128
Phone: (651) 704-9970
Email: Oakdale@bolton-menk.com
www.bolton-menk.com


Cottage Grove — Where Pride and Prosperity Meet

| DESIGNED | ANO |
|---|---|
| DRAWN | BNM |
| CHECKED | MJB |
| CLIENT PROJ. NO. | 137045 |

| NO. | ISSUED FOR | DATE |
|---|---|---|

CITY OF COTTAGE GROVE
2026 PAVEMENT MANAGEMENT PROJECT
STREET LIGHTING

SHEET E1.03


©Bolton & Menk, Inc. 2026. All Rights Reserved
H:\COTT\24X137045000\CAD\C3D\137045E101.dwg 2/25/2026 6:56:14 AM

# City Council Action Request

# 7.T.

| | |
|---|---|
| **Meeting Date** | 3/4/2026 |
| **Department** | Engineering |
| **Agenda Category** | Action Item |
| **Title** | Hamlet Pond - Change Order & Final Payment |
| **Staff Recommendation** | Approve Change Order #1 and adopt Resolution 2026-029 approving the final payment of $169,818.48 for the 2025 Hamlet Pond – Phase 2: Bank Grading and Sediment Removal Project. |
| **Budget Implication** | $169,818.48 - Stormwater Utility Fund |

**Attachments**

| | |
|---|---|
| 1. | 2026-2-25 Change Order Memo |
| 2. | Final Payment - Hamlet Pond |
| 3. | Hamlet Pond Change Order 1-Spreadsheet |
| 4. | BILLING #1 REVISED |

Cottage Grove
Where Pride and Prosperity Meet

**To:** Honorable Mayor and City Council
Jennifer Levitt, City Administrator

**From:** Joe Fox, PE, Project Engineer
Paul Sponhoz, PE, City Engineer

**Date:** February 25, 2026

**Subject:** 2025 Hamlet Pond – Phase 2: Bank Grading and Sediment Removal – Change Order #1 and Final Payment

---

## Background

Every year the city undertakes maintenance at one or more stormwater ponds. In 2025, work was done at Hamlet Park Pond in two phases. In Phase 1 in February, sediment was removed from the southern end of the pond. The Hamlet Park Bank Grading Project, in October, was Phase 2, approved with Resolution 2025-095 on July 16, 2025. In this phase, sediment was removed from the north end of the pond and the slope along the west side of the pond was regraded. The regrading eliminated a steep drop on the pond bank.

## Discussion

After the Phase 2 plans were prepared and quotes received, and the awarded contractor was mobilizing, staff found lower water levels in the pond due to previous work. The lower water levels exposed an estimated 400 cubic yards of additional sediment needing removal and additional pipe aprons and riprap needing repairs. With the contractor already mobilizing for the original Phase 2 work, it was more cost effective to have that contractor complete the work while the contractor was onsite, rather than complete a new project later. The contractor provided an updated quote using the existing quoted unit prices to complete the extra work. Staff notified City Council via the weekly email updates on October 24, 2025 that the extra work, estimated at about $50,000, was going to be completed. Then staff directed the contractor to complete the extra work. The additional work utilizes budgeted Stormwater Utility Funds.

The original quoted amount was for $114,481.25. Change Order #1 covers additional work valued at $55,337.23. The total work completed is $169,818.48. This will be the first and final payment for Phase 2 work. The invoice will be paid from the Stormwater Utility Fund.

## Recommendation

Staff recommends that the City Council approve Change Order #1 and adopt Resolution 2026-029 approving the final payment of $169,818.48 for the 2025 Hamlet Pond – Phase 2: Bank Grading and Sediment Removal Project.

CITY OF COTTAGE GROVE
CITY COUNCIL
RESOLUTION NO. 2026-029

**RESOLUTION APPROVING THE FINAL PAYMENT IN THE AMOUNT OF $169,818.48 TO NEW LOOK CONTRACTING, INC. FOR THE 2025 HAMLET POND – PHASE 2: BANK GRADING AND SEDIMENT REMOVAL PROJECT**

WHEREAS, the City Engineer has certified that work has been satisfactorily completed; and

WHEREAS, the original total contract amount was $114,481.25. The final construction cost was $169,818.48, which is greater than the contract amount. The increased construction cost was due to additional sediment removal and various work beyond initial quantities; and

WHEREAS, the project has been satisfactorily completed in accordance with the contract plans and specifications.

NOW THEREFORE BE IT RESOLVED, by the City Council of the City of Cottage Grove, County of Washington, State of Minnesota, that $169,818.48 is paid to New Look Contracting, Inc. for the final payment for the 2025 Hamlet Pond – Phase 2: Bank Grading and Sediment Removal Project.

Passed this 4th day of March, 2026.

_____
Myron Bailey, Mayor

Attest:

_____
Tamara Anderson, City Clerk

Change Order #1
Project: 2025 Hamlet Pond – Phase 2: Bank Grading and Sediment Removal
Contractor: New Look
City of Cottage Grove Resolution 2025-095; 7/16/2025
Effective Date of Change Order 10/24/2025

| Original Quote | | | | | Change Order | | | Totals |
|---|---|---|---|---|---|---|---|---|
| | quantity | unit | unit price | total | quantity | unit price | total | |
| Mobilization | 1 | LS | $ 12,000.00 | $ 12,000.00 | | | | $ 12,000.00 |
| Construction Mats | 1 | LS | $ 4,500.00 | $ 4,500.00 | | | | $ 4,500.00 |
| Grubbing | 0.4 | Acre | $ 10,500.00 | $ 4,200.00 | | | | $ 4,200.00 |
| remove rip rap | 30 | Ton | $ 55.00 | $ 1,650.00 | | | | $ 1,650.00 |
| Excavate pond | 400 | CY | $ 95.00 | $ 38,000.00 | 406 | $ 95.00 | $ 38,570.00 | $ 76,570.00 |
| Class 3 rip rap | 30 | Ton | $ 115.00 | $ 3,450.00 | 107.07 | $ 115.00 | $ 12,313.05 | $ 15,763.05 |
| Class 4 rip rap | 30 | Ton | $ 115.00 | $ 3,450.00 | | | | $ 3,450.00 |
| top soil borrow | 580 | CY | $ 48.00 | $ 27,840.00 | -10 | $ 48.00 | $ (480.00) | $ 27,360.00 |
| Emat | 2885 | SY | $ 2.25 | $ 6,491.25 | 1926.3 | $ 2.25 | $ 4,334.18 | $ 10,825.43 |
| biolog | 3000 | LF | $ 4.00 | $ 12,000.00 | | | | $ 12,000.00 |
| Seed | 12 | LB | $ 75.00 | $ 900.00 | 8 | $ 75.00 | $ 600.00 | $ 1,500.00 |
| Original Total | | | | $ 114,481.25 | Change Order Total | | $ 55,337.23 | |
| Grand Total | | | | | | | | $ 169,818.48 |

NEW LOOK INC. CONTRACTING

14045 Northdale Blvd
Rogers MN 55374
763 241-1596

# Unit Billing

Application: 1

Period: 02/11/2026

**Owner:** City of Cottage Grove

**Job Location:**

2025 Hamlet Pond Slope Grading & Sediment Re
8883 Hamlet Ave S
Cottage Grove MN 55016

## Application For Payment On Contract

| | |
|---|---|
| **Contract Sum to Date** | 114,481.25 |
| **Total Complete to Date** | 169,818.48 |
| **Total Retained** | 0.00 |
| **Total Earned Less Retained** | 169,818.48 |
| **Less Previous Billings** | 0.00 |
| **Current Payment Due** | 169,818.48 |
| **Balance on Contract** | -55,337.23 |

## Contractor's Certification of Work

The undersigned contractor certifies that, to the best of the contractor's knowledge, the work on the above named job has been completed in accordance with the plans and specifications to the level of completion indicated on the attached schedule of completion.

Contractor: _____ Date: 2/23/2026

*Terms: Invoices are due and payable 30DY from the date of invoice. All overdue amounts will be charged a service charge of 0.0000% per annum. Please make checks payable to:* New Look Contracting, Inc.

*Thank you for your prompt payment.*

Unit Billing

Application: 1

Period: 02/11/2026

Schedule of Work Completed

| Bid Item | Description | Price | Unit | Total Contract Units | Previous Units Billed | Current Units Complete | Total Units Complete | Previous Value | Current Value | Total Value |
|---|---|---|---|---|---|---|---|---|---|---|
| 0 | None | | | | | | | | | |
| 10 | MOBILIZATION | 12,000.00 | LS | 1.0000 | | 1.00 | 1.00 | | 12,000.00 | 12,000.00 |
| 20 | CONSTRUCTION MATS | 4,500.00 | LS | 1.0000 | | 1.00 | 1.00 | | 4,500.00 | 4,500.00 |
| 30 | GRUBBING | 10,500.00 | ACRE | 0.4000 | | 0.40 | 0.40 | | 4,200.00 | 4,200.00 |
| 40 | REMOVE EXISTING RIPRAP | 55.00 | TON | 30.0000 | | 30.00 | 30.00 | | 1,650.00 | 1,650.00 |
| 50 | RANDOM RIPRAP CLASS III | 115.00 | TON | 30.0000 | | 167.07 | 167.07 | | 19,213.05 | 19,213.05 |
| 60 | RANDOM RIPRAP CLASS IV | 115.00 | TON | 30.0000 | | | | | | |
| 70 | REMOVE SEDIMENT | 95.00 | CY | 400.0000 | | 806.00 | 806.00 | | 76,570.00 | 76,570.00 |
| 80 | TOPSOIL BORROW(LV) | 48.00 | CY | 580.0000 | | 570.00 | 570.00 | | 27,360.00 | 27,360.00 |
| 90 | BIO LOGS | 4.00 | LF | 3,000.0000 | | 3,000.00 | 3,000.00 | | 12,000.00 | 12,000.00 |
| 100 | EROSION CONTROL MAT | 2.25 | SY | 2,885.0000 | | 4,811.30 | 4,811.30 | | 10,825.43 | 10,825.43 |
| 110 | SEED(MNDOT TYPE WD) | 75.00 | LB | 12.0000 | | 20.00 | 20.00 | | 1,500.00 | 1,500.00 |
| | | **Totals:** | | **114,481.25** | | | | | **169,818.48** | **169,818.48** |

# City Council Action Request

# 7.U.

| | |
|---|---|
| **Meeting Date** | 3/4/2026 |
| **Department** | Engineering |
| **Agenda Category** | Action Item |
| **Title** | SCADA Integrator Professional Services Agreement |
| **Staff Recommendation** | Approve the Professional Services Agreement with In Control, Inc. and appropriate officials are hereby authorized to sign all necessary documents to effectuate these actions. |
| **Budget Implication** | Ongoing SCADA system operations & maintenance included in the Water and Sanitary Sewer Utility Fund budgets. |

**Attachments**

| | |
|---|---|
| 1. | 2026-2-26 SCADA Integrator PSA |
| 2. | UI COR Cottage Grove MN - Prof Services Agreement - In Control 2-26-26 01_Executed |
| 3. | IU SAL 2026 InC Rate Schedule_Cottage Grove 01F |

**To:** Honorable Mayor and City Council
Jennifer Levitt, City Administrator

**From:** Ryan Burfeind, PE, Public Works Director
Chad Donnelly, PE, Deputy Public Works Director - Utilities

**Date:** February 26, 2026

**Re:** SCADA Integrator Professional Services Agreement

---

## Background

In 2023, Cottage Grove began implementing a new Supervisory Control and Data Acquisition Maintenance (SCADA) system, which controls our water and sewer utility systems. In addition to controlling the systems, it also triggers alarms and ensures protection against cybersecurity threats. This work was included in Low Zone Water Treatment Plant project and is paid for by our utility funds. With the new system, the City selected a new professional services SCADA integrator. This firm handles all programming of the system and works with the City on the necessary hardware at each utility site. In the spring of 2023, the City went through an interview and vetting process of three companies. Each of these companies had an extensive track record of working other water and sewer utilities in the metro area. The City ultimately selected In Control, Inc., and they were contracted under the Low Zone Water Treatment Plant project to implement the new SCADA system.

## Discussion

The implementation of the new SCADA system was recently completed, and the City is entering into a phase of ongoing operations and maintenance, making it is necessary to enter into an agreement with In Control to cover this work. This will include programming, firmware and hardware system upgrades and replacements along with 24/7 On-Call support services for SCADA maintenance. The City Attorney has drafted a five-year professional services agreement which covers the terms and conditions of this work. All ongoing operations and maintenance work is budgeted for in the Water and Sanitary Sewer Utility Funds. One item to note is that separate proposals from In Control would be necessary for any larger project-based work in the future.

## Recommendation

It is recommended the City Council approve the Professional Services Agreement with In Control, Inc. and appropriate officials are hereby authorized to sign all necessary documents to effectuate these actions.

# AGREEMENT FOR PROFESSIONAL SERVICES

THIS AGREEMENT ("Agreement") is made and executed this 26th day of February, 2026, by and between the City of Cottage Grove, 12800 Ravine Parkway South, Cottage Grove, Minnesota 55016, ("City") and In Control, Inc., 5301 E River Rd, Suite 108, Fridley, MN 55421 ("Consultant").

WHEREAS, the City has elected to enter into this professional services agreement with the Consultant for certain professional services; and

WHEREAS, Consultant desires to perform the services for the City under the terms and conditions set forth in this Agreement.

NOW, THEREFORE, in consideration of the mutual consideration contained herein, it is hereby agreed as follows:

1. SERVICES.

    a. City agrees to engage Consultant as an independent contractor on an as-needed project basis as requested by the City for the purpose of performing certain professional Services, which may include, but is not limited to:
        - Programming and procurement and integration of firmware, and hardware for the water treatment plants, sanitary sewer lift stations, well houses, and water towers;
        - Procurement, integration and programming of programmable logic controllers, communication systems and ancillary electrical equipment, network architecture maintenance and recording keeping, development of topological and logical network records, development and maintenance of system configurations;
        - 24/7 On-Call support services for support and troubleshooting of the other Services and maintenance and monitoring of the Supervisory Control and Data Acquisition software

        (hereinafter called "Services").

    b. Consultant covenants and agrees to provide the Services to the satisfaction of the City in a timely fashion, subject to Section 7 of this Agreement.

    c. Consultant agrees to comply with all federal, state, and local laws and ordinances applicable to the Services to be performed under this Agreement. Consultant represents and warrants that it has the requisite training, skills, and experience necessary to provide the Services and is appropriately licensed and has obtained all permits from all applicable agencies and governmental entities.

2. PAYMENT.

    a. City agrees to pay, and Consultant agrees to receive and accept payment for Services as set forth in an agreed-upon fee schedule.

    b. Any changes in the scope of the work of the Services that may result in an increase to the compensation due the Consultant shall require prior written approval by the authorized representative of the City or by the City Council. The City will not pay additional compensation for Services that do not have prior written authorization.

    c. Consultant shall submit itemized bills for Services provided to City on a monthly basis. Bills submitted shall be paid in the same manner as other claims made to City.

3. TERM. The term of this Agreement shall be for five (5) years. This Agreement may be extended upon the written mutual consent of the parties for such additional periods as they deem appropriate, and upon the same terms and conditions as stated herein.

4. TERMINATION.

    a. Termination by Either Party. This Agreement may be terminated by either party upon thirty (30) days' written notice delivered to the other party to the addresses listed in Section 13 of this Agreement. Upon termination under this provision, if there is no default by the Consultant, Consultant shall be paid for Services rendered and reimbursable expenses incurred until the effective date of termination.

    b. Termination Due to Default. This Agreement may be terminated by either party upon written notice in the event of substantial failure by the other party to perform in accordance with the terms of this Agreement. The non-performing party shall have fifteen (15) calendar days from the date of the termination notice to cure or to submit a plan for cure that is acceptable to the other party.

5. SUBCONTRACTORS. Consultant shall not enter into subcontracts for any of the Services provided for in this Agreement without the express written consent of the City.. Consultant shall pay any subcontractor involved in the performance of this Agreement within the ten (10) days of the Consultant's receipt of payment by the City for undisputed services provided by the subcontractor.

6. STANDARD OF CARE. In performing its Services, Consultant will use that degree of care and skill ordinarily exercised, under similar circumstances, by reputable members of its profession in the same locality at the time the Services are

provided. No warranty, express or implied, is made or intended by Consultant's undertaking herein or its performance of Services.

7. DELAY IN PERFORMANCE. Neither City nor Consultant shall be considered in default of this Agreement for delays in performance caused by circumstances beyond the reasonable control of the nonperforming party. For purposes of this Agreement, such circumstances include, but are not limited to, abnormal weather conditions; floods; earthquakes; fire; epidemics; war, riots, and other civil disturbances; strikes, lockouts, work slowdowns, and other labor disturbances; sabotage; judicial restraint; and inability to procure permits, licenses or authorizations from any local, state, or federal agency for any of the supplies, materials, accesses, or services required to be provided by either City or Consultant under this Agreement. If such circumstances occur, the nonperforming party shall, within a reasonable time of being prevented from performing, give written notice to the other party describing the circumstances preventing continued performance and the efforts being made to resume performance of this Agreement. Consultant will be entitled to payment for its reasonable additional charges, if any, due to the delay.

8. CITY'S REPRESENTATIVE. The City has designated Chad Donnelly to act as the City's representative with respect to the Services to be performed under this Agreement. He shall have complete authority to transmit instructions, receive information, interpret, and define the City's policy and decisions with respect to the Services covered by this Agreement.

9. PROJECT MANAGER AND STAFFING. The Consultant has designated Graham Arntzen to be the primary contact for the City in the performance of the Services. He shall be assisted by other staff members as necessary to facilitate the completion of the Services in accordance with the terms established herein. Consultant may not remove or replace these designated staff without the approval of the City.

10. INDEMNIFICATION.

    a. Consultant and City each agree to indemnify, and hold harmless each other, its agents and employees, from and against legal liability for all claims, losses, damages, and expenses to the extent such claims, losses, damages, or expenses are caused by its negligent acts, errors, or omissions. In the event claims, losses, damages, or expenses are caused by the joint or concurrent negligence of Consultant and City, they shall be borne by each party in proportion to its own negligence.

    b. Consultant shall indemnify City against legal liability for damages arising out of claims by Consultant's employees. City shall indemnify Consultant against legal liability for damages arising out of claims by City's employees.

11. INSURANCE. During the performance of the Services under this Agreement, Consultant shall maintain the following insurance:

    a. General Liability Insurance, with a limit of $2,000,000 for any number of claims arising out of a single occurrence.

    b. Professional Liability Insurance, with a limit of $2,000,000 for any number of claims arising out of a single occurrence.

    c. Workers' Compensation Insurance in accordance with statutory requirements.

    d. Automobile Liability Insurance, with a combined single limit of $2,000,000.

    Consultant shall furnish the City with certificates of insurance, which shall include a provision that such insurance shall not be canceled without written notice to the City. The City shall be named as an additional insured on the General Liability Insurance policy.

12. OWNERSHIP OF DOCUMENTS. Professional documents, drawings, and specifications prepared by the Consultant as part of the Services shall become the property of the City when Consultant has been compensated for all Services rendered, provided, however, that Consultant shall have the unrestricted right to their use. Consultant shall retain its rights in its standard drawing details, specifications, databases, computer software, and other proprietary property. Rights to proprietary intellectual property developed, utilized, or modified in the performance of the Services shall remain the property of the Consultant.

13. NOTICES. Notices shall be communicated to the following addresses:

    If to City:

    City of Cottage Grove
    10875 Ideal Avenue South
    Cottage Grove, MN 55016
    Attention: Chad Donnelly

    Or emailed: cdonnelly@cottagegrovemn.gov

    If to Consultant:

    In Control, Inc.
    5301 E River Rd, Suite 108
    Fridley, MN 55421

    Or emailed: curt.kattleman@inconttrol.net &
    drake.willis@incontrol.net

14. INDEPENDENT CONTRACTOR STATUS. All services provided by Consultant, its officers, agents and employees pursuant to this Agreement shall be provided as employees of Consultant or as independent contractors of Consultant and not as employees of the City for any purpose.

15. GENERAL PROVISIONS.

    a. Assignment. This Agreement is not assignable without the mutual written agreement of the parties.

    b. Waiver. A waiver by either City or Consultant of any breach of this Agreement shall be in writing. Such a waiver shall not affect the waiving party's rights with respect to any other or further breach.

    c. Governing Law. This Agreement shall be construed in accordance with the laws of the State of Minnesota and any action must be venued in Washington County District Court.

    d. Amendments. Any modification or amendment to this Agreement shall require a written agreement signed by both parties.

    e. Severability. If any term of this Agreement is found to be void or invalid, such invalidity shall not affect the remaining terms of this Agreement, which shall continue in full force and effect.

    f. Data Practices Compliance. All data collected by the City pursuant to this Agreement shall be subject to the Minnesota Government Data Practices Act, Minnesota Statutes, Chapter 13.

    g. Entire Agreement. This Agreement constitutes the entire agreement of the parties and supersedes all prior communications, understandings and agreements relating to the subject matter hereof, whether oral or written.

[The remainder of this page is intentionally left blank]

**CITY OF COTTAGE GROVE**

By: _____
Myron Bailey, Mayor

By: _____
Tamara Anderson, City Clerk

Date: _____

**CONSULTANT**
**IN CONTROL, Inc.**

*Graham Arntzen*

Signature: _____

Name: Graham Arntzen

Its: Vice President

Date: February 26, 2026

In Control, Inc.
5301 E River Rd, Suite 108
Fridley, MN 55421

# 2026 Rate Schedule

(effective January 1, 2026)

| Services, Hourly | **ControlSecure*** | **W/o ControlSecure** |
|---|---|---|
| Integration Consulting | $232.20 | $258.00 |
| Professional Engineering | $206.10 | $229.00 |
| Sr. Engineer | $190.80 | $212.00 |
| Engineering | $177.30 | $197.00 |
| Technician | $137.70 | $153.00 |
| CAD and Drafting | $126.90 | $141.00 |
| Production | $79.20 | $88.00 |

*ControlSecure
Customers covered by In Control's regular SCADA and PLC maintenance, updates, and cybersecurity defense services.

**Scheduled Field Engineering Service and Phone Service**
Minimum Billing for Job Site Visit is $600.00 and for Phone Support is 1 hour.

Emergency Service
Emergency Service is billed for unscheduled work, which requires immediate attention, at 1.5x the base rate. On Saturdays, Sundays, holidays, and outside extended work week business hours (7:00AM-7:00PM), at 2.0x the base rate.

Travel Expenses
Mileage is billed at $0.90/mile. Other travel expenses including airfare, rental car, and living expenses are billed at cost. Meals and incidentals are charged at $73/day.

Standard Terms
Services are billed monthly with standard terms of net 30 days.

Escalation
The hourly labor rates listed in the Rate Schedule are subject to a variable annual escalation of no more than 4.0% on each anniversary of the contract. This increase shall be applied cumulatively to the rates in effect during the immediately preceding contract year.

# City Council Action Request

# 7.V.

| | |
|---|---|
| **Meeting Date** | 3/4/2026 |
| **Department** | Public Works |
| **Agenda Category** | Action Item |
| **Title** | Water Service Repair-Assessment Waiver Agreement |
| **Staff Recommendation** | 1) Approve the Assessment Waiver Agreement for 6237 64th Street South and appropriate officials are hereby authorized to sign all necessary documents to effectuate these actions. 2) Adopt the assessment in the amount of $6,300.00 as outlined in the agreement. |
| **Budget Implication** | $6300 - Assessment |

**Attachments**

| | |
|---|---|
| 1. | 2026-2-23 Water Service Repair Assessment Agreement |
| 2. | 6237 64th Street Assessment Agreement |

Cottage Grove
Where Pride and Prosperity Meet

**To:** Honorable Mayor and City Council
Jennifer Levitt, City Administrator

**From:** Ryan Burfeind, PE, Public Works Director
Chad Donnelly, PE, Deputy Public Works Director - Utilities

**Date:** February 25, 2026

**Re:** Water Service Repair – Assessment Waiver Agreement with Property Owner

---

## Background

Recently, the water service at 6237 64th Street S developed a leak on the privately maintained section located between the curb stop and home. Work such as this comes with a very high cost, however City Code requires property owners to pay for repairs in this section of the service. The resident has requested that this work be assessed to the property over time. City Staff have researched other communities and found it to be common practice for a City to pay for the repairs up front and then assess them to the property. A few similar cities include Richfield, Stillwater, and Hastings.

## Discussion

The City Attorney has drafted an assessment waiver agreement, which has been signed by the property, and covers the conditions of this assessment. To remove any liability from the City, the property owner is responsible for coordinating the work and dealing with any warranty issues. The City's role is strictly to pay for the work, which was invoiced to the property owner for $6,300. The City will pay the contractor and then assess the costs to the property owner. The assessment will be over five years and includes five percent interest.

## Recommendation

It is recommended that the City Council:

1. Approve the Assessment Waiver Agreement for 6237 64th Street South and appropriate officials are hereby authorized to sign all necessary documents to effectuate these actions.
2. Adopt the assessment in the amount of $6,300.00 as outlined in the agreement.

**CITY OF COTTAGE GROVE**
**ASSESSMENT WAIVER AGREEMENT FOR UTILITY LINE REPAIR AT**
6237 64th Street, Cottage Grove **(ADDRESS), COTTAGE GROVE, MN**

**THIS ASSESSMENT WAIVER AGREEMENT** ("Agreement") is entered into and effective as of the February 26, 2026 ("Agreement Date"), by and between the City of Cottage Grove, a Minnesota municipal corporation ("City"), and Mr./Mrs. Tyler and Kayla Beaulieu ("Owner").

**WITNESSETH:**

**WHEREAS,** the Owner is the fee simple owner of property legally described on the attached Exhibit A, located in the City of Cottage Grove, Washington County, Minnesota ("Property") that will be benefited by certain improvements; and

**WHEREAS,** the City has identified the need to repair a utility line that serves the Property ("Improvements"); and

**WHEREAS,** the Owner will cause the construction of the Improvements; and

**WHEREAS,** the Owner has requested that the City pay for the costs of construction of the Improvements and assess the costs against the Property; and

**WHEREAS,** the Owner is willing to waive the assessment appeal rights up to the full value of the Assessment Amount which constitutes an estimated benefit of the Improvements pursuant to Minnesota Statutes, Chapter 429 in the manner authorized by Minnesota Statutes § 462.353.

**NOW, THEREFORE,** in consideration of the mutual promises and covenants of each to the other contained in this Agreement and other good and valuable consideration, receipt of which is hereby acknowledged, the parties hereto covenant and agree as follows:

## ARTICLE I
## THE AGREEMENT

**Section 1.01 Purpose.** The purpose of this Agreement is to memorialize the covenants and agreements between the Owner and the City with regard to the Property and the Improvements and that Owner's acceptance of the assessment up to the Assessment Amount which constitutes an estimated benefit of the Improvements pursuant to Minnesota Statutes, Chapter 429 in the manner authorized by Minnesota Statutes § 462.3531.

**Section 1.02 Term.** The term of this Agreement shall commence on the Agreement Date and shall terminate upon the expiration of the Assessment Term or repayment of the Assessment Amount.

**Section 1.03 Survival.** Notwithstanding the termination of this Agreement pursuant to Section 1.02, the Owner's Covenants and Agreements contained in Section 3.01 and the City's Covenants and Agreements contained in Section 3.02 shall survive the termination of this Agreement.

## ARTICLE II
## DEFINITIONS

**Section 2.01 Definitions.** The following are terms used in this Agreement. Their meanings as used in this Agreement shall be expressly indicated below, unless the context of this Agreement requires otherwise:

(a) Agreement: This Agreement to memorialize the covenants and agreements between the Owner and the City with regard to the Property, Assessment Amount and the Improvements including the assessment appeal waiver provided herein pursuant to Minnesota Statutes, Chapter 429 in the manner authorized by Minnesota Statutes § 462.3531.

(b) Agreement Date: The date written in the first paragraph of the Agreement.

(c) Assessment Interest Rate: The Assessment Amount shall accrue interest at a rate of five percent (5%) per year for the Assessment Term. Interest shall begin accruing thirty (30) days after the City Council's approval of this Agreement.

(d) Assessment Term: The term of the special assessment shall be from the date that the interest accrual begins in 2.01 (c) until the Assessment Amount is paid in full, or Five (5) years after the Assessment Amount is levied against the Property.

(e) City: The City of Cottage Grove, a Minnesota municipal corporation.

(f) Assessment Amount: The Assessment Amount is the total value of the Improvements in the amount of 6,300 /Dollars ($ .00 .00). The Assessment

Amount is equal to or exceeds the estimated special benefit of the Improvements to the Property.

(g) Owner: Mr./Mrs. Tyler and Kayla Beaulieu, (husband and wife).

(h) Property: The real property identified and described on Exhibit A.

## ARTICLE III
## COVENANTS AND AGREEMENTS

**Section 3.01 Covenants and Agreements of the Owner.** The Owner covenants and agrees with the City that:

(a) Assessment Appeal Waiver: Owner will hire a contractor of Owner's choice to construct the Improvements and hereby authorizes the City to certify a special assessment against the Property up to the Assessment Amount for Improvements. The Owner hereby waives all rights to assessment notices, hearings and appeals, and all other rights pursuant to Minn. Stat. § 429.061, § 429.071 and § 429.081 for the special assessment against the Property up to the Assessment Amount. The Owner hereby waives any and all procedural and substantive objections to the assessment up to the Assessment Amount against the Property, including, but not limited to, notice and hearing requirements and any claim that any or all of the Assessment Amount against the Property exceeds the benefit to the Property for the Improvements. The Owner acknowledges and agrees that the benefit of the Improvements to the Property does in fact equal or exceed the Assessment Amount. The City and the Owner acknowledge and agree that the Owner's waiver of assessment appeal rights pursuant to Minnesota Statutes, Chapter 429, is capped at the Assessment Amount by operation of Minn. Stat. § 462.3531. The City and the Owner acknowledge and agree that the Owner may appeal any special assessment above the Assessment Amount.

(b) Owner's Covenant Not to Sue the City: Owner hereby covenants with the City not to appeal or sue the City for a court to set aside, reduce, repeal, or invalidate the assessment, or for other relief from the payment of the City's assessment up to the Assessment Amount against the Property for the Improvements constructed by the City.

(c) Owner's Covenant that Owner is the Property Fee Owner: Owner hereby covenants and warrants with the City that Owner is seized in fee of the Property and has good right to enter into this Agreement with the City.

(d) Owner's Agreement to Assessment Amount: Owner understands and agrees that the value of the Improvements will increase the market value of the Property in an amount that equals or exceeds the Assessment Amount.

(e) When Payment is Due: Owner agrees to pay the Assessment Amount, plus accrued interest during the Assessment Term.

**Section 3.02 Covenants and Agreements of the City.** The City covenants and agrees with the Owner that:

(a) Assessment Amount: The City agrees to pay the funds necessary for the Improvements directly to the contractor and that it will certify/levy the Assessment Amount against the Property up to the Assessment Amount for the Improvements pursuant to this Agreement.

(b) City Recording of this Agreement: The City will record this Agreement against the Property.

(c) Prepayment of Assessment: The City agrees the Owner may prepay some or all of the City's Assessment Amount against the Property for the Improvements with no penalty and only with interest accrual pursuant to Minn. Stat. § 429.061.

## ARTICLE IV
## DEFAULT

**Section 4.01 Default.** If a party to this Agreement materially defaults in the due and timely performance of any of its covenants, or agreements hereunder, the other party(s) may give notice of default of this Agreement. The notice shall specify with particularity the default or defaults on which the notice is based. The notice shall specify a ten (10) day cure period within which the specified default or defaults must be cured. If the specified defaults are not cured within the cure period, the other party(s) may pursue all remedies and sanctions available at law and in equity, including specific performance.

**Section 4.02 Attorneys' Fees, Costs and Expenses.** The Owner agrees that after execution of this Agreement, if it challenges the validity of the Assessment up to the Assessment Amount in any way, then Owner shall pay the City the amount of the City's assessment up to the Assessment Amount with accrued interest beginning as stated in Section 2.01(c), together with the City's attorneys' fees, costs and expenses to defend the assessment by the City up to the Assessment Amount pursuant to this Agreement. The Owner acknowledges and agrees that the Owner would be unjustly enriched if the City's assessment up to the Assessment Amount pursuant to this Agreement was set aside, reduced, repealed or invalidated by a court with jurisdiction over the Property. The Owner agrees that the court with jurisdiction over the Property shall award the City the assessment up to the Assessment Amount with accrued interest together with the City's attorneys' fees, costs and expenses for breach of the Owner's covenant not to appeal or sue the City pursuant to Section 3.01(b).

## ARTICLE V
## GENERAL PROVISIONS

**Section 5.01 Notices.** All notices, requests, demands or other communications required or permitted by this Agreement shall be in writing and delivery shall be deemed to be sufficient if delivered personally or by registered or certified mail, return receipt accepted, postage prepaid, addressed as follows:

If to the City: City of Cottage Grove
Attention: City Administrator
12800 Ravine Parkway South
Cottage Grove, MN 55016

If to the Owner:

**Section 5.02 Non-Assignability.** Neither the City nor the Owner shall assign any interest in this Agreement nor shall either party transfer any interest in the same without the prior written consent of the other party.

**Section 5.03 Binding Effect.** This Agreement and the terms, conditions and covenants contained herein and the transaction contemplated hereunder shall be binding upon and inure to the benefit of the parties hereto and their respective successors, heirs, personal representatives, and permitted assigns. This Agreement shall further be binding on subsequent purchasers of the Property and shall run with the Property herein described.

**Section 5.04 Severability.** In the event any provision of this Agreement shall be held invalid or unenforceable by any court of competent jurisdiction, such holding shall not invalidate or render unenforceable any other provision hereof.

**Section 5.05 Amendments, Changes and Modifications.** This Agreement may be amended or any of its terms modified or changed only by a written amendment authorized and executed by the City and the Owner.

**Section 5.06 Counterparts.** This Agreement may be simultaneously executed in several counterparts, each of which shall be an original and all of which shall constitute but one and the same instrument.

**Section 5.07 Entire Agreement.** This Agreement shall constitute the entire agreement between the parties and shall supersede all prior oral or written negotiations.

**Section 5.08 Notice To Buyers.** The Owner agrees to notify and provide any buyer of the Property with an executed copy of this Agreement if the Owner sells any interest in the Property following the execution of this Agreement by both the Owner and the City, but before the recording of this Agreement with Washington County Recorder and/or Registrar of Titles.

**[The remainder of this page was intentionally left blank.]**

**IN WITNESS WHEREOF,** the City and the Owner have caused this Agreement to be executed by their duly authorized representatives.

**CITY:**
**CITY OF COTTAGE GROVE**

By: _____
Myron Bailey
Mayor

By: _____
Tamara Anderson
City Clerk

STATE OF MINNESOTA )
) ss.
COUNTY OF WASHINGTON )

On this _____ day of _____, 2026 before me a Notary Public within and for said County, personally appeared Myron Bailey and Tamara Anderson to me personally known, who being each by me duly sworn, each did say that they are respectively the Mayor and the City Clerk of the City of Cottage Grove, the Minnesota municipal corporation named in the foregoing instrument, and that it was signed on behalf of said municipal corporation by authority of its City Council and said Mayor and City Clerk acknowledged said instrument to be the free act and deed of said municipal corporation.

_____
Notary Public

**OWNER:**

STATE OF MINNESOTA )
) ss.
COUNTY OF Washington

The foregoing instrument was executed this 26 day of February, 2026, by Mr./Mrs. Tyler and Kayla Beaulieu, husband and wife.

PATRICIA K DILLON
Notary Public
Minnesota
My Commission Expires January 31, 2030

Notary Public

**This instrument drafted by**
**And after recording, please return to:**
Korine L. Land (#262432)
LeVander, Gillen & Miller, P.A.
1305 Corporate Center Drive, Suite 300
Eagan, MN 55121
(651) 451-1831

## EXHIBIT A

### Legal Description of Property

Real property in the City of Cottage Grove, Washington County, Minnesota, legally described as follows:

Block 8, Lot 4, HAWTHORNE PINES

PID: 06.027.21.23.0018

# INVOICE

Jacon Construction Co
1081 S Birch Lake Blvd
White Bear Lake Township, MN
55127

Sarah@jaconco.com
+1 (651) 426-8561
www.jaconco.com

JACON
EXCAVATING • UTILITIES • DEMOLITION

**Bill to**
Tyler Beaulieu
6237 64th Street S
Cottage Grove, MN 55016

**Invoice details**
Invoice no.: 7941
Terms: Net 30
Invoice date: 02/25/2026
Due date: 03/27/2026

PO/Job Name: 6237 64th Street S

| Date | Product or service | Description | Qty | Rate | Amount |
|---|---|---|---|---|---|
| 02/25/2026 | **Trucking** | Vac Truck | 1 | $800.00 | $800.00 |
| 02/25/2026 | **Excavating** | Dig and repair water leak in front yard | 1 | $5,500.00 | $5,500.00 |
| | | **Total** | | | **$6,300.00** |

# City Council Action Request

# 7.W.

| | |
|---|---|
| **Meeting Date** | 3/4/2026 |
| **Department** | Administration |
| **Agenda Category** | Action Item |
| **Title** | LCCR Grant Submission Authorization - Mississippi Dunes Development Project |
| **Staff Recommendation** | Adopt Resolution 2026-038 authorizing staff to apply for the Minnesota LCCMR grant in the amount of $386,250 to assist in the completion of plans for the Mississippi Dunes Park Building. |
| **Budget Implication** | $128,750 - Park Trust |

**Attachments**

| | |
|---|---|
| 1. | Council Memo_LCCMR Grant Authorization |
| 2. | Resolution_LCCMR |

| | |
|---|---|
| **To:** | Honorable Mayor and City Council<br>Jennifer Levitt, City Administrator |
| **From:** | Gavin Hochstetler, Management Analyst |
| **CC:** | Zac Dockter, Parks and Recreation Director |
| **Date:** | March 4, 2026 |
| **Subject:** | Legislative-Citizen Commission on Minnesota Resources Grant Submission Authorization for Mississippi Dunes Park Development Project |

---

**Introduction/Background**
The City of Cottage Grove has been actively working towards the completion of Mississippi Dunes Park, which is intended to serve as a key recreational and community asset. The Legislative-Citizen Commission on Minnesota Resources (LCCMR) grant program provides funding for projects that enhance outdoor recreation, natural resources, and public access. This funding opportunity would allow the city to focus on the Mississippi Dunes Park Master Plan with specific emphasis on completion of plans for the four seasons park building.

**Budget Implications**
If authorization to apply for the Minnesota LCCMR grant is approved by council, staff will be submitting an application for a total of $515,000 to assist in the development at Mississippi Dunes Park. A requirement for the LCCMR grant is a cash or in-kind match of 25% of the total cost to complete the project or project phase. A match amount of $128,750 would be authorized to meet grant requirements.

Funding Breakdown is as follows:

**Mississippi Dunes Park Building** – 4350 sf
Estimated Cost of Construction - $2,700,000

---

Proposed Design Fee - $338,000
Geotechnical Testing - $15,000
Site Survey - $12,000
Site Design (utility connections and extensions to the building, restoration, parking, trail connections, exterior plazas, etc.) - $150,000

---

LCCMR Grant Funds - $386,250
25% cash or in-kind match - $128,750

---

**Total Project Design - $515,000**

**Staff Recommendation**
Authorize staff to apply for the Minnesota LCCMR grant in the amount of $386,250 to assist in the completion of plans for the Mississippi Dunes Park Building.

CITY OF COTTAGE GROVE, MINNESOTA
CITY COUNCIL
RESOLUTION 2026-038

**RESOLUTION AUTHORIZING PROPOSAL SUBMISSION OF THE LCCMR GRANT FOR MISSISSIPPI DUNES PARK DEVELOPMENT PROJECT FOR $386,250**

WHEREAS, The City of Cottage Grove seeks $386,250 to financially assist in the design phase of the Mississippi Dunes Park Development Project.

NOW, THEREFORE, BE IT RESOLVED, That the City of Cottage Grove supports the above referenced project and authorizes the submittal of a proposal for funding of this project on behalf of the City of Cottage Grove to the Legislative-Citizen Commission on Minnesota Resources (LCCMR) in response to the ML 2027 Environmental and Natural Resources Trust Fund (ENRTF) Request for Proposal; and

BE IT FURTHER RESOLVED, That, if funding is awarded, the City of Cottage Grove agrees to accept the award and may enter into an agreement with the state of Minnesota for the above referenced project. The City of Cottage Grove will comply with all applicable laws, environmental requirements, and regulations and any additional conditions stated in the grant agreement and the approved LCCMR work plan; and

BE IT FURTHER RESOLVED, That City of Cottage Grove understands that grants from the ENRTF are generally paid out on a reimbursement basis. The City of Cottage Grove has the financial capability to pay for project expenses prior to seeking reimbursement; and

BE IT FURTHER RESOLVED, That City of Cottage Grove certifies none of the current principals of City of Cottage Grove have been convicted of a felony financial crime in the last ten years. For this purpose, a principal is defined as a public official, a board member, or staff that would have the authority to access or determine the use of ENRTF funds, if awarded; and

BE IT FURTHER RESOLVED, That Mayor Myron Bailey is hereby authorized to execute such agreements and work plans as necessary and Zac Dockter is authorized to implement the project on behalf of the City of Cottage Grove.

BE IT FURTHER RESOLVED, That the City of Cottage Grove has the financial capability to ensure adequate operation and maintenance of the project once completed; and

NOW, THEREFORE, BE IT RESOLVED, by the City Council of the City of Cottage Grove, County of Washington, State of Minnesota, that the City of Cottage Grove be authorized to submit a LCCMR Grant Proposal for the Mississippi Dunes Park Development Project for $386,250.

Passed this 4th day of March 2026.

_____
Myron Bailey, Mayor

Attest:

_____
Tamara Anderson, City Clerk

# City Council Action Request

# 8.A.

| | |
|---|---|
| **Meeting Date** | 3/4/2026 |
| **Department** | Finance |
| **Agenda Category** | Action Item |
| **Title** | Approve Disbursements |
| **Staff Recommendation** | Approve disbursements from 02-13-2026 through 02-26-2026 in the amount of $4,366,287.26. |
| **Budget Implication** | N/A |

**Attachments**

| | |
|---|---|
| 1. | Expense Approval Report 3-4-2026 Council Meeting |
| 2. | Payroll Check Register 3-4-2026 Council Meeting |
| 3. | UB Check Register 3-4-26 Council Meeting |

# City Council Action Request

# 11.A.

**Meeting Date** 3/4/2026

**Department** Community Development

**Agenda Category** Action Item

**Title** Panera – Site Plan Review and Conditional Use Permit

**Staff Recommendation** 1) Adopt Resolution 2026-036 approving a Site Plan Review for the construction of a restaurant and associated site improvements to be located at 7162 East Point Douglas Road South. 2) Adopt Resolution 2026-037 approving a Conditional Use Permit for a Restaurant with a Drive-up Window to be located at 7162 East Point Douglas Road South. 3) Approve the Permanent Utility Easement, Encroachment Agreement, Permanent Drainage and Utility Easement, Permanent Sidewalk Easement, and the Stormwater Management and Facilities Agreement with DCJ Cottage Grove, LLC.

**Budget Implication** N/A

**Attachments**

| | |
|---|---|
| 1. | Panera CC Memo 2-25-26 |
| 2. | Panera Resolution 2026-036 - Site Plan Review |
| 3. | Panera Resolution 2026-037 - Conditional Use Permit |
| 4. | Panera Plan Review Memo 2026-02-17 |
| 5. | Permanent Drainage and Utility Easement Panera |
| 6. | Permanent Utility Easement Panera |
| 7. | Permanent Sidewalk Easement Panera |
| 8. | Encroachment Agreement - Panera - City of Cottage Grove |
| 9. | Stormwater Management Facilities Agreement Panera |
| 10. | Panera Civil & Site Plans |
| 11. | Panera Prelim Elev and Floor Plans |
| 12. | Panera Stormwater Report |

TO: Honorable Mayor and City Council
Jennifer Levitt, City Administrator

FROM: Max Erickson, Planner

DATE: February 25, 2026

RE: Panera – Site Plan Review and Conditional Use Permit at 7162 East Point Douglas Road South

---

## Proposal

CA Commercial Development (Applicant), on behalf of DCJ Cottage Grove, LLC, has submitted an application for a Site Plan Review and Conditional Use Permit to redevelop the site at 7162 East Point Douglas Road to construct a restaurant with a drive-up window. The building is proposed to be 2,631 square feet with a drive-up window and additional site improvements proposed, including stormwater, parking lot, and landscaping improvements.

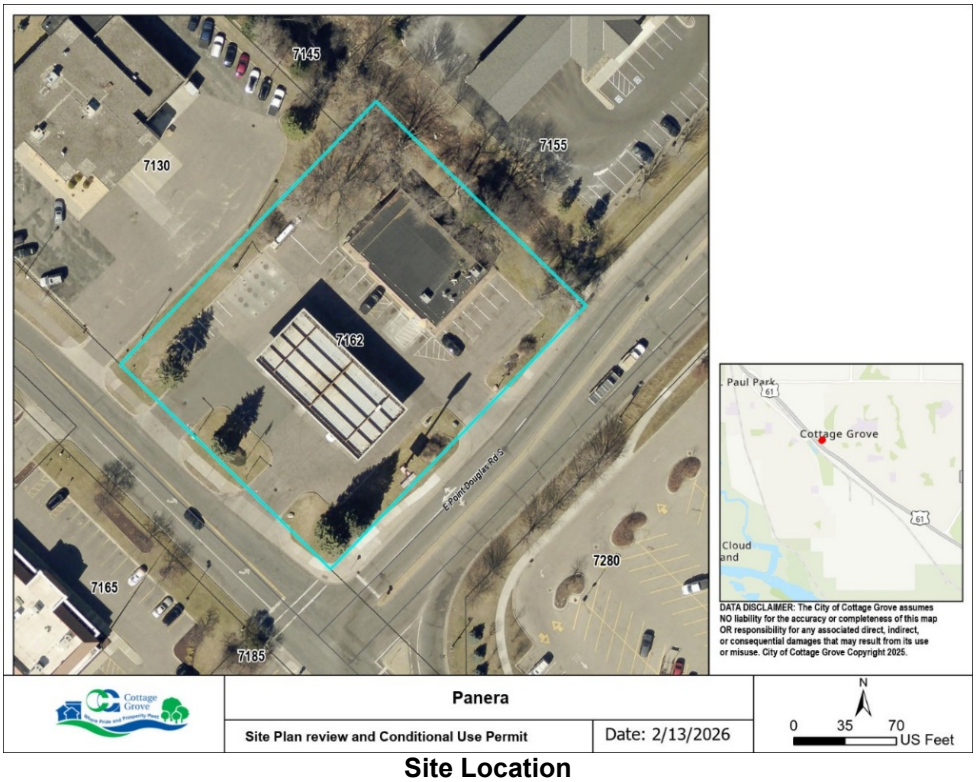


**Site Location**

***Review Schedule***
Application Received: January 28, 2026
Application Accepted: January 28, 2026
Planning Commission Meeting: February 23, 2026
City Council Meeting: March 4, 2026
60-Day Review Deadline: March 29, 2026

## Background

The property was originally platted in 1888 as St. Paul Park Acre Lots, creating several residential lots. Over time, as commercial development occurred in the area, the lots in the original subdivision were combined to create what is now a 1.15-acre mixed-used commercial lot.

The site is located on the corner of East Point Douglas Road, west of Hy-Vee and north of Las Margaritas and Arby's. In 1981, a Conditional Use Permit was approved for construction and operation of a Motor Fuel Station (Super America) via Resolution 81-126. In 2018 with the branding change to Speedway, the site underwent façade and sign updates to represent the new brand.

Speedway closed in 2025, and the property has been actively marketed for sale since that time. The fuel canopy and fuel tanks have been removed and an environmental study on the site has been completed to determine any potential contamination from the long-standing fuel tanks. Pace Analytical Services, LLC collected samples identifying minor contamination. The findings are under review by the Minnesota Pollution Control Agency (MPCA), who will determine mitigation requirements, if any. The Applicant will be required to provide verification of acceptance by the MPCA prior to issuance of a building permit.

## Planning Considerations

### *Zoning and Comprehensive Plan*

The parcel is zoned Mixed Use Business and is guided Mixed Use in the 2040 Comprehensive Plan. Restaurants with a drive-up window are permitted as a conditional use in the Mixed-Use Business District.

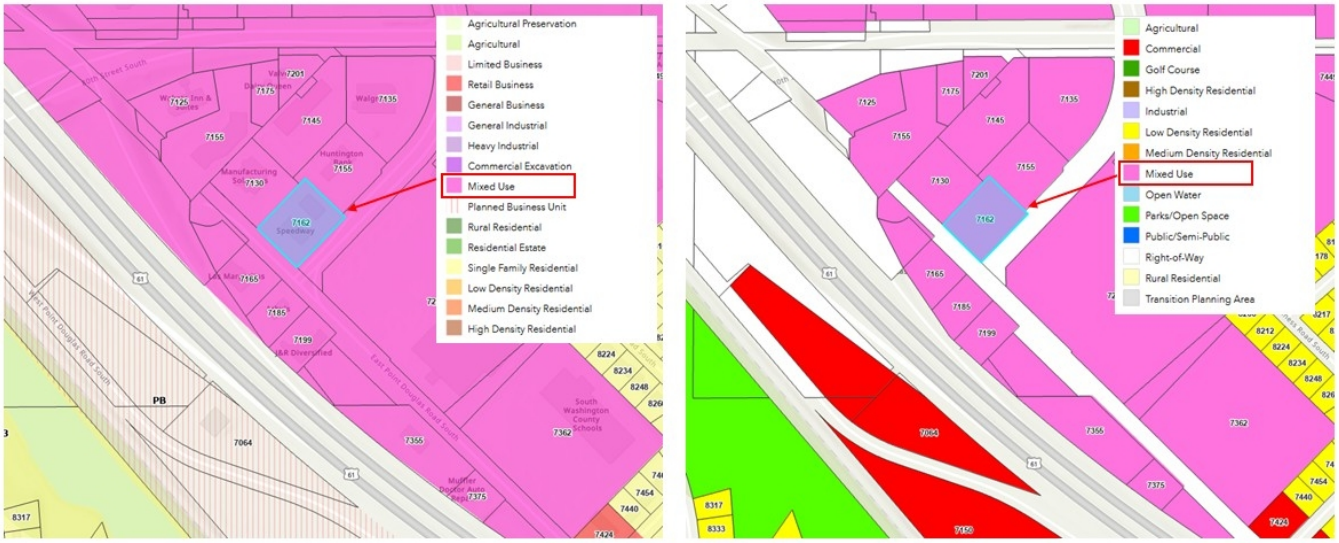


Current Zoning 2040 Future Use

**Current Zoning and Future Land Use**

### *Conditional Use Permit*

When evaluating any conditional use permit application, the Planning Commission shall consider the following findings:

1. *Compliance with and effect upon the Comprehensive Plan, including public facilities and capital improvement plans.*
2. *The establishment, maintenance or operation of the conditional use will promote and enhance the general public welfare and will not be detrimental to or endanger the public health, safety, morals or comfort.*
3. *The conditional use will not be injurious to the use and enjoyment of other property in the immediate vicinity for the purposes already permitted, nor substantially diminish and impair property values within the neighborhood.*
4. *The establishment of the conditional use will not impede the normal and orderly development and improvement of surrounding property for uses permitted in the district.*
5. *Adequate public facilities and services are available or can be reasonably provided to accommodate the use which is proposed.*
6. *The conditional use shall, in all other respects, conform to the applicable regulations of the district in which it is located.*
7. *The conditional use complies with the general and specific performance standards as specified by the Zoning Code.*

The use as a Restaurant with a drive-up window is consistent with the findings above as described in this report.

***Site Plan***

The Applicant is proposing to remove the existing building and construct an approximate 2,600 square foot building with indoor and outdoor seating. The building will include a drive-through lane and window. The proposal includes complete redevelopment of the site; therefore, the plans submitted address all required code standards including minimum parking, stormwater standards, and architectural material requirements.

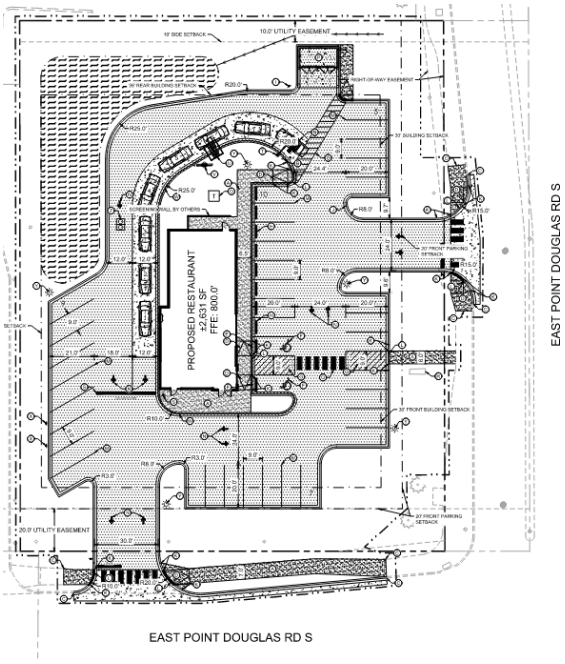


**Site Plan**

***Site Access and Traffic***

There are currently three driveway accesses to the site off East Point Douglas Road, one from the east and two at the south side. The Applicant is proposing to remove the southeast access near the corner of East Point Douglas Road. Modifications are proposed to reduce the width of the northeastern access to 26 feet to increase efficiency of the site traffic flow. The traffic pattern of the drive-through lane will be of a counterclockwise fashion whereas the southern parking area will flow either direction.

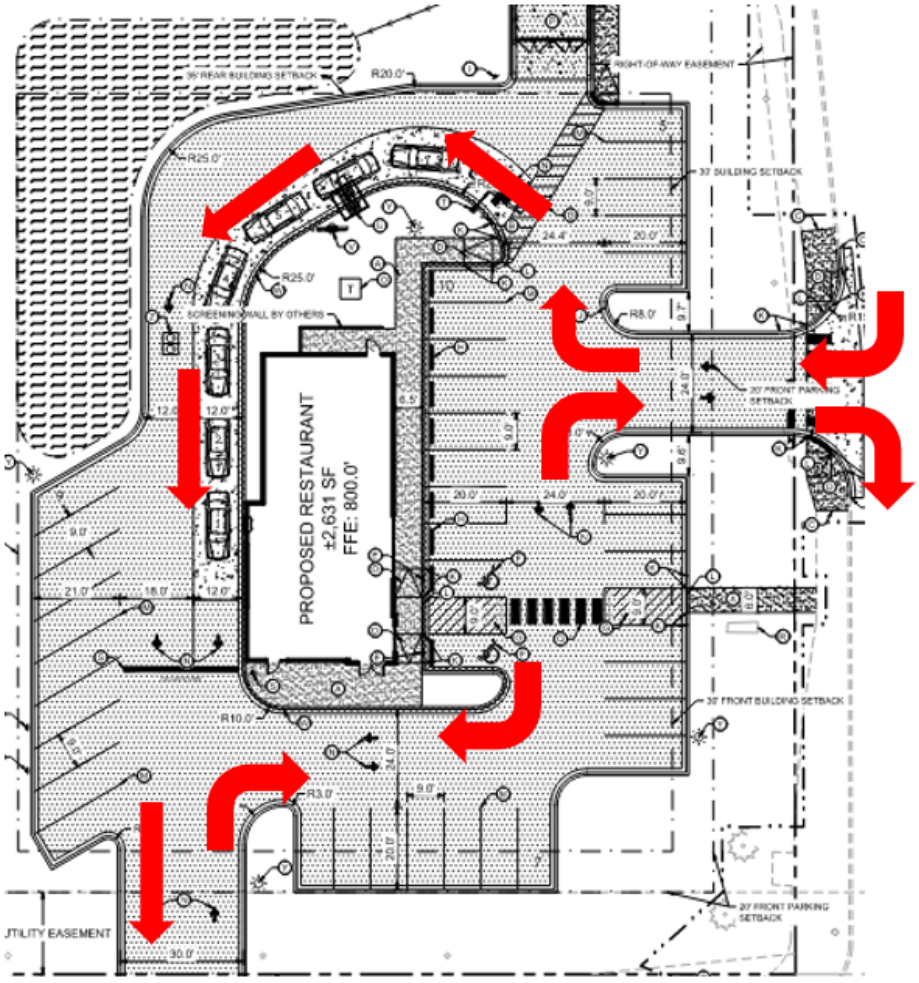


**Traffic Flow**

A public sidewalk system runs along the southern and eastern edges of the property along East Point Douglas Road. With the removal of the southeastern access, the applicant will reconnect the existing sidewalk to the southwest corner. One small segment of this sidewalk currently encroaches onto private property and is outside of the existing right-of-way easement. To ensure future access by the city for maintenance and/or replacement, it is imperative that this segment of sidewalk be within a sidewalk easement. This easement will be required to be recorded prior to the issuance of a building permit.

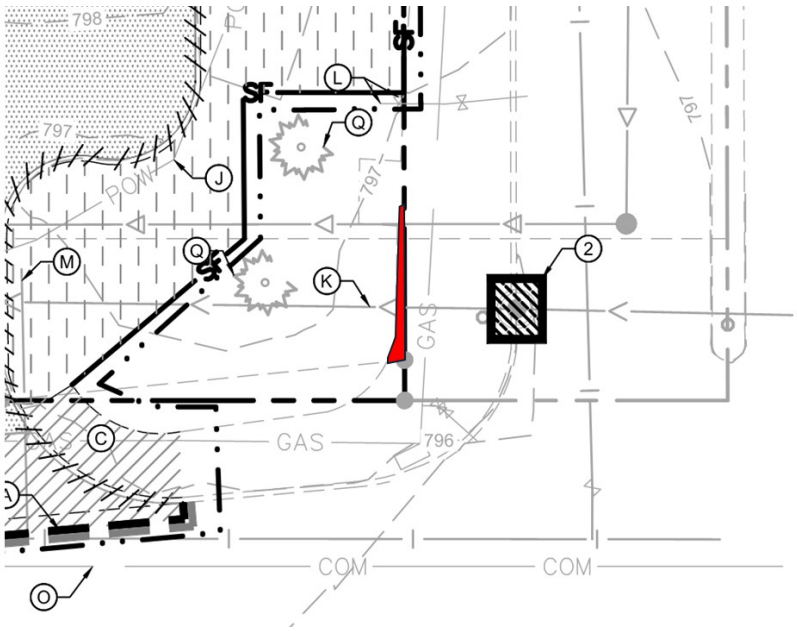


**Required Sidewalk Easement (Red)**

Additionally, an existing paved area for a bench exists along the sidewalk on the southeast corner of the site. The bench has since been removed, and no transit stop currently exists or is planned. The Applicant will be required to remove this portion of pavement.

Near the east access, the Applicant is proposing to install a private sidewalk connection connecting their site to existing sidewalks. The proposed sidewalk connection will encroach within the city's right-of-way; therefore, the Applicant shall enter into an encroachment agreement with the city prior to issuance of a building permit.

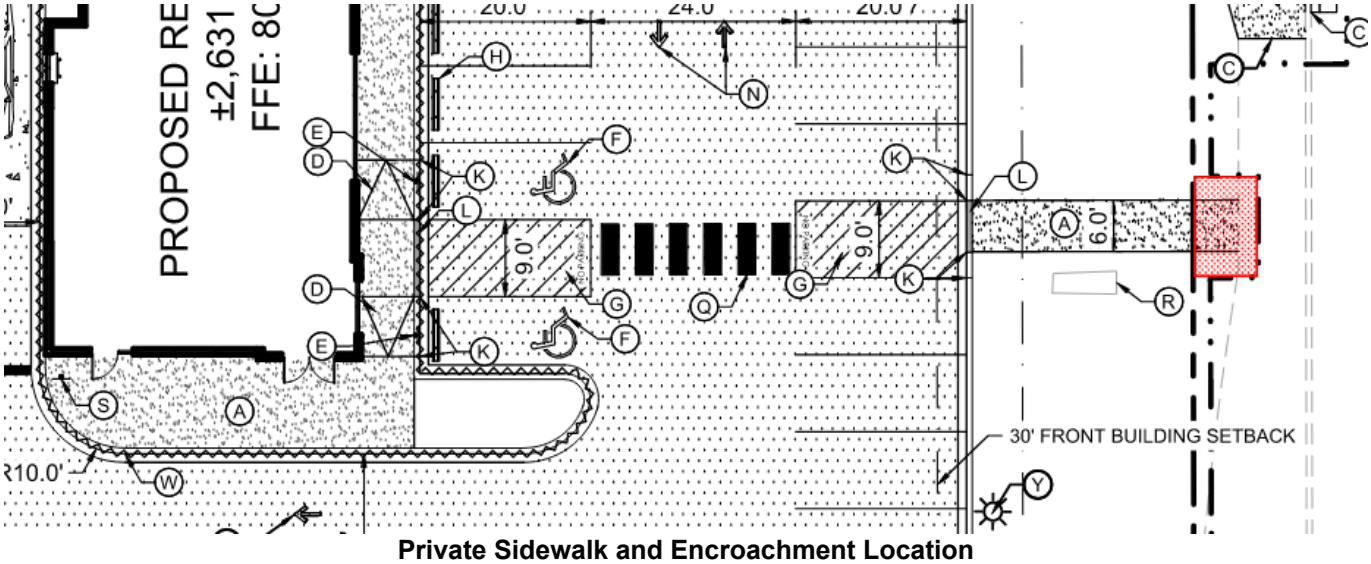


**Private Sidewalk and Encroachment Location**

***80th Street and East Point Douglas Road Improvements***

The city is reconstructing 80th Street from Highway 61 to Ideal Avenue as well as East Point Douglas Road south of 80th Street to the intersection of East Point Douglas Road in 2026, which will likely occur at the same time as the construction of the Panera site. The reconstruction of the

access on the east side of the site and the proposed connection to the utilities within East Point Douglas Road will require coordination between city staff, contractors, and the Applicant to ensure efficiency in both projects.

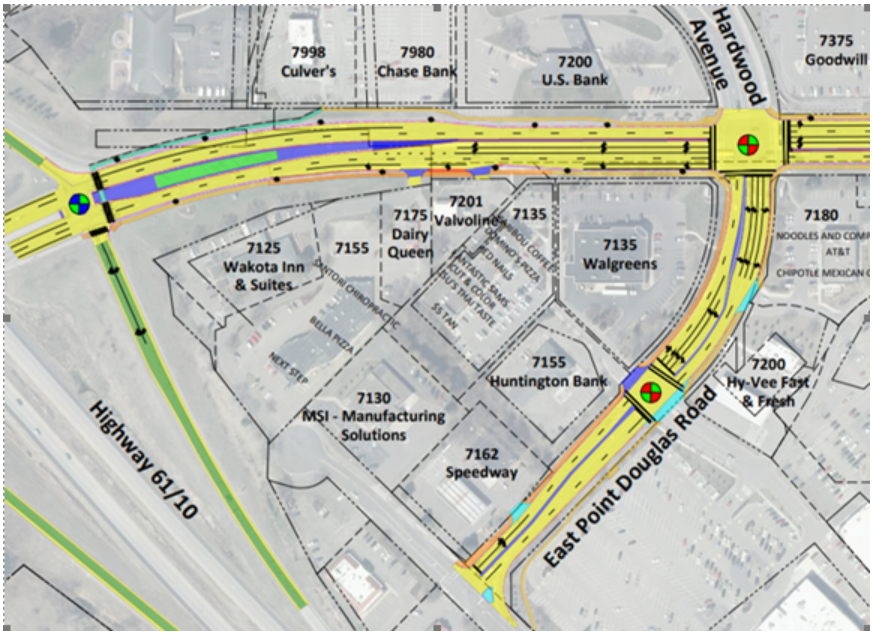


**Proposed 80th St and East Pt Douglas Improvements**

***Parking***

Restaurants with a drive-in are required to provide 1 space for each 3 seats based on capacity design, plus employee parking. The Applicant is proposing an eating area that will accommodate 60 customer seats with 8 employees at a given time.

This requires parking based on the following: 60 seats divided by 3 seats equals 20 parking spaces. Adding 8 additional spaces for employees, 28 parking spaces are required per code for the site. The Applicant is proposing 38 total spaces, which exceeds the standard requirement. Nine of the proposed parking spaces will be angle parking with an 18-foot depth along the one-way drive through area and the remainder of the parking spaces will be at 90 degrees with a 24-foot depth.

Additionally, special zoning standards in City Code Title 11-4-2 require fast-food drive-up locations to accommodate vehicle stacking up to 6 cars per drive though lane without obstructing pedestrian or parking lot traffic. The Applicant is proposing one drive-through lane with vehicle stacking to accommodate at least eight vehicles at a time.

All proposed parking meets the setback standard within the Mixed Use Business District. As this site is a corner lot, a 20-foot setback for the parking lot is required from both street frontages and a 10-foot setback from side and rear lot lines. The proposed parking lot complies with these setbacks.

***Outdoor Seating and Dining***

The Applicant has proposed outdoor seating and dining to include 18 seats. Outdoor dining and eating are regulated by City Code Title 11-4-16 and includes several requirements.

- The seating must not interfere with traffic circulation.
- Seating must be located in a controlled area with one available access to pedestrian traffic.
- Seating shall not interfere with any entrance or exit and shall not interfere with required safety measures.
- Outdoor seating must be less than 30 percent of the square footage of the principal building
- Outdoor seating must be defined by the use of fencing or landscaping.

The applicant has proposed an approximate 400 square foot outdoor seating area, which is 15 percent of the proposed 2,631 square foot building. No additional parking is required for the proposed outdoor seating and dining area with the proposed 18 seats.

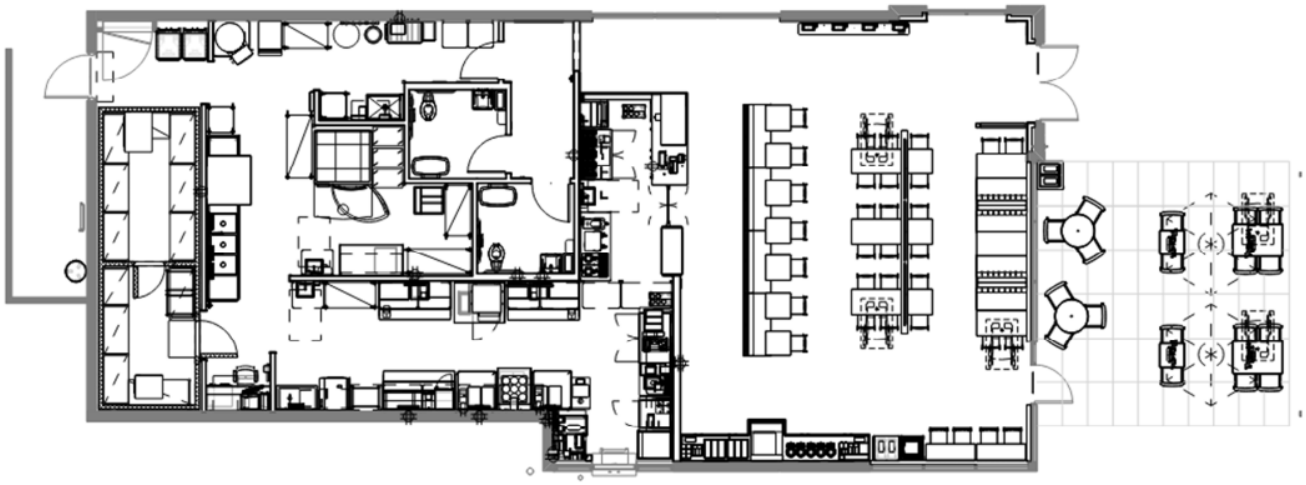

**Proposed Floor Plan**

***Tree Preservation***

City Code Title 11-3-13D allows up to 40 percent removal of qualifying inches in business and commercial districts without mitigation, while City Code Title 11-3-13E(6) allows an exception for the requirement for a tree inventory and preservation plan if fewer than 25 trees are removed. The Applicant has identified removing 11 trees onsite; therefore, a tree inventory and mitigation plan is not required per city code.

***Landscaping***

The Applicant has submitted a detailed landscape plan including proposed additional landscaping throughout the site. Landscaping will be installed around the parking lot, perimeter of the property, and around the drive-through area.

City Code requires a certain number of trees and shrubs to be planted based on site disturbance area and the coefficients found in City Code Title 11-3-12. Based on the site area identified (50,094 square feet) and each coefficient relevant to the Mixed-Use Business District, the following number of trees and shrubs are required. The Applicant's landscape plan meets the minimum landscape requirements.

| Required Landscaping (50,094 square foot site area) | | | |
|---|---|---|---|
| **Trees** | **Coefficient** | **Plantings Required** | **Provided Plantings** |
| Overstory Deciduous | 0.0002786 | 14 | 14 |
| Coniferous | 0.0002600 | 13 | 13 |
| Shrubs | 0.0006 | 30 | 287 |

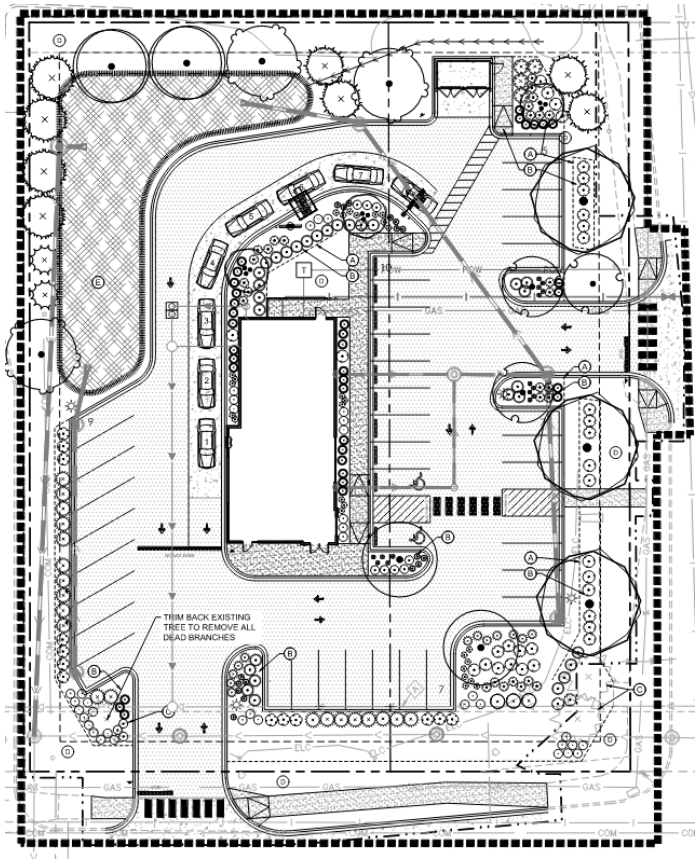


**Landscaping Plan**

City Code requires that the perimeters of buildings that face public streets or parking lots shall be landscaped for a length equal to half of the building dimension. The Applicant has provided a landscape plan to reflect the requirements of the City Code with landscaping along the west and east sides of the building. With limited space on the site and the addition of an outside seating area to the south, building perimeter landscaping will be provided along entire eastern side of the building to compensate for no perimeter landscaping on the southern side covering greater than half of building areas that face public streets and parking lots.

As part of the proposed landscaping plan, the Applicant is proposing to install trees within the perimeter 10-foot drainage and utility easement on the eastern property line. The applicant also proposes the installation of a limited number of conifers and shrubs within the existing utility easement on the south side of the property. The Applicant understands at any time the city requires access to these easements, the landscaping may be removed, and the property owner will be responsible for replacement of the landscaping within the easements.

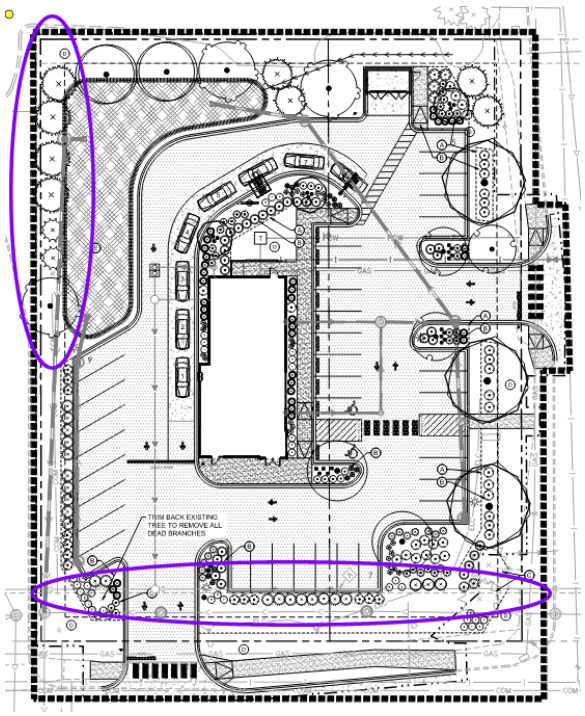


**Proposed Plantings Within Easements**

City Code Title 11-3-12B(1) requires interior parking lots that are greater than 25 stalls include parking lot islands covering at least 8 percent of the area of the parking lot. The proposed parking area is approximately 17,700 square feet, which requires 8 percent, or roughly 1,400 square feet, of landscaped islands. The Applicant has provided 2,480 square feet of internal parking lot landscaping to be constructed, exceeding the required code standard for parking islands.

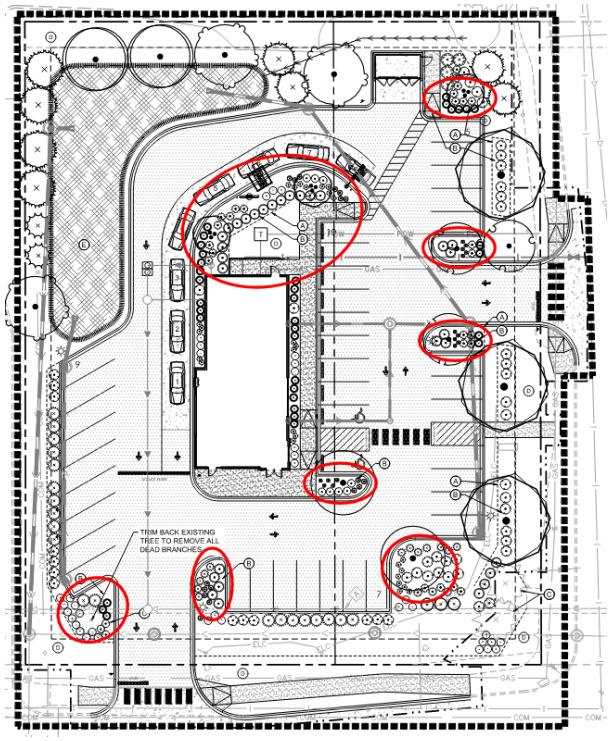


**Proposed Parking Lot Landscape Islands**

### *Signage*

At the time of construction, or some time prior to 1993, a 60-foot pylon sign was permitted to be constructed on the site. The city's current sign code does not allow for signs to be taller than 15 feet in height and must have a base width consistent with the sign face. The current pylon sign is considered to be a legal non-conforming sign and is therefore permitted to remain; however, legal non-conforming signs shall not be expanded. The Applicant proposes to utilize the existing sign and is not proposing to expand the legal non-conformity. The Applicant is proposing to remove the lower cabinet, replace the sign face of the upper cabinet, and paint the pole and sign. These proposed modifications are permitted to maintain the legal non-conformity. At any time additional modification or expansions are proposed to the sign, it must be brought into compliance with current city sign standards.

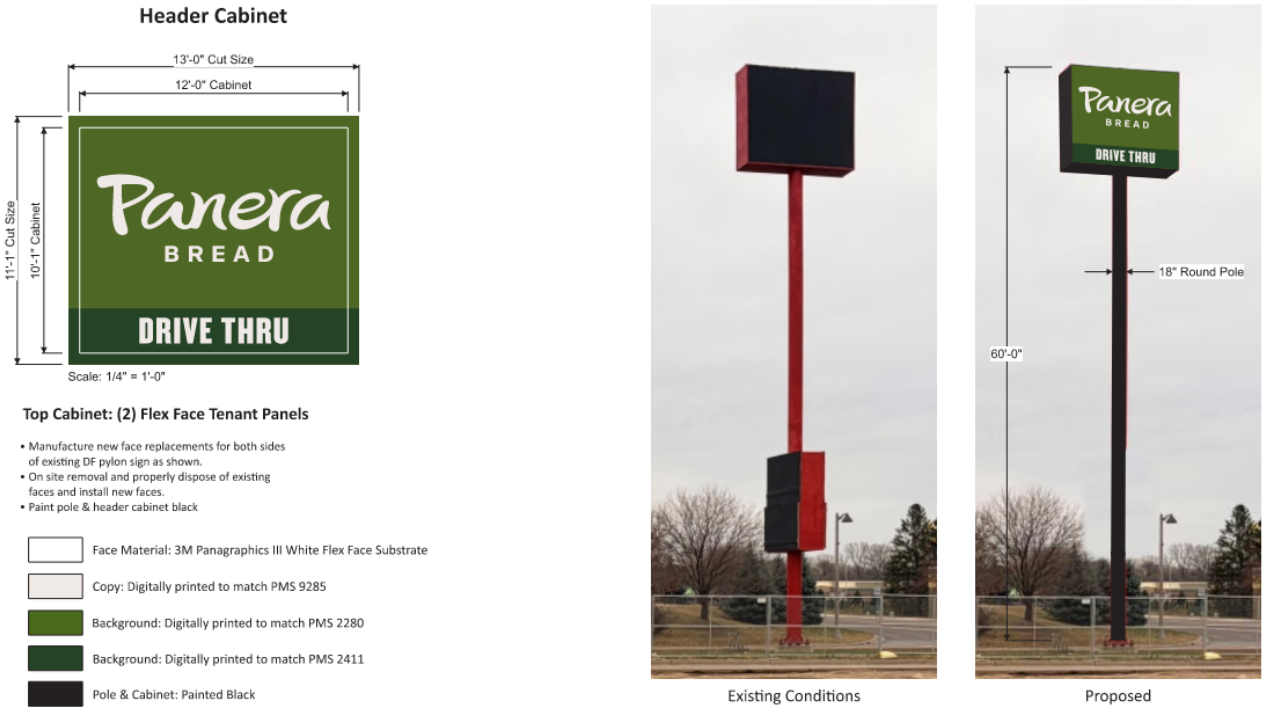


**Proposed Pylon Alterations**

The Applicant is proposing to add a menu board with speaker box at the drive-through. Special zoning provisions in Title 11-4-2 regulate standards for these types of signs in drive-through establishments. The menu board must not be lit after hours, and all speaker boxes must remain 50 feet from any adjacent residential lot or use. No residential lot abuts this property, and this request complies with City Code. A sign permit shall be required to be secured prior to installation of additional signage on the property.

### *Lighting*

The applicant proposes adding several lighting features to illuminate the parking areas. City code standard requires 1-foot candle or less when measured at property lines abutting a commercial district. The Applicant has provided a photometric plan indicating lighting will be less than 1-foot candle at all property lines.

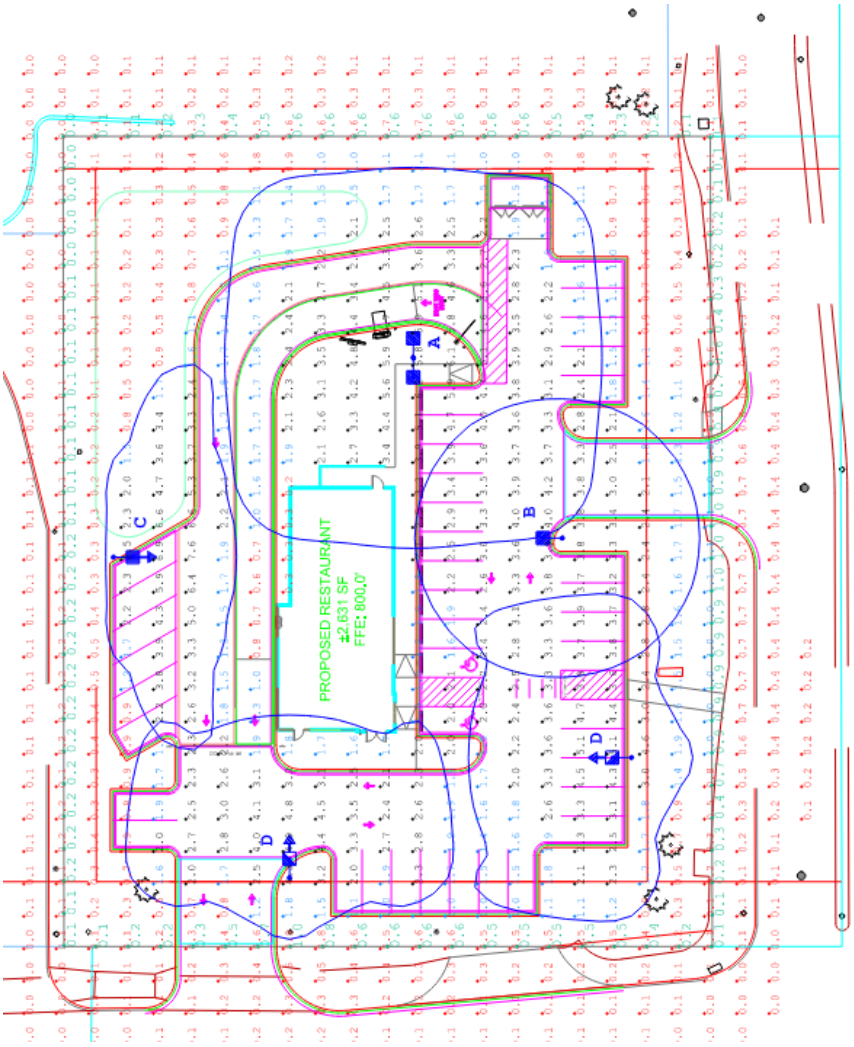


**Photometric Plan**

***Architectural Materials***

City code requires non-residential buildings within business districts to use at least three different Class I materials and be composed of no less than 65 percent Class I and 2 materials and not more than 10 percent Class 4. The Applicant is proposing 66 percent of the building to consist of different textures of masonry brick and glass, all Class I materials. Additionally, a green fiber cement material will accent the proposed brick material. All materials and colors chosen are to reflect the Panera brand.

| Material | Class | Percent |
|---|---|---|
| Two types of Masonry Brick | 1 | 66% |
| Transparent Glass | 1 | |
| Fiber Cement Panel (Green) | 3 | 32% |
| Aluminum Framing and Canopy | 4 | 2% |

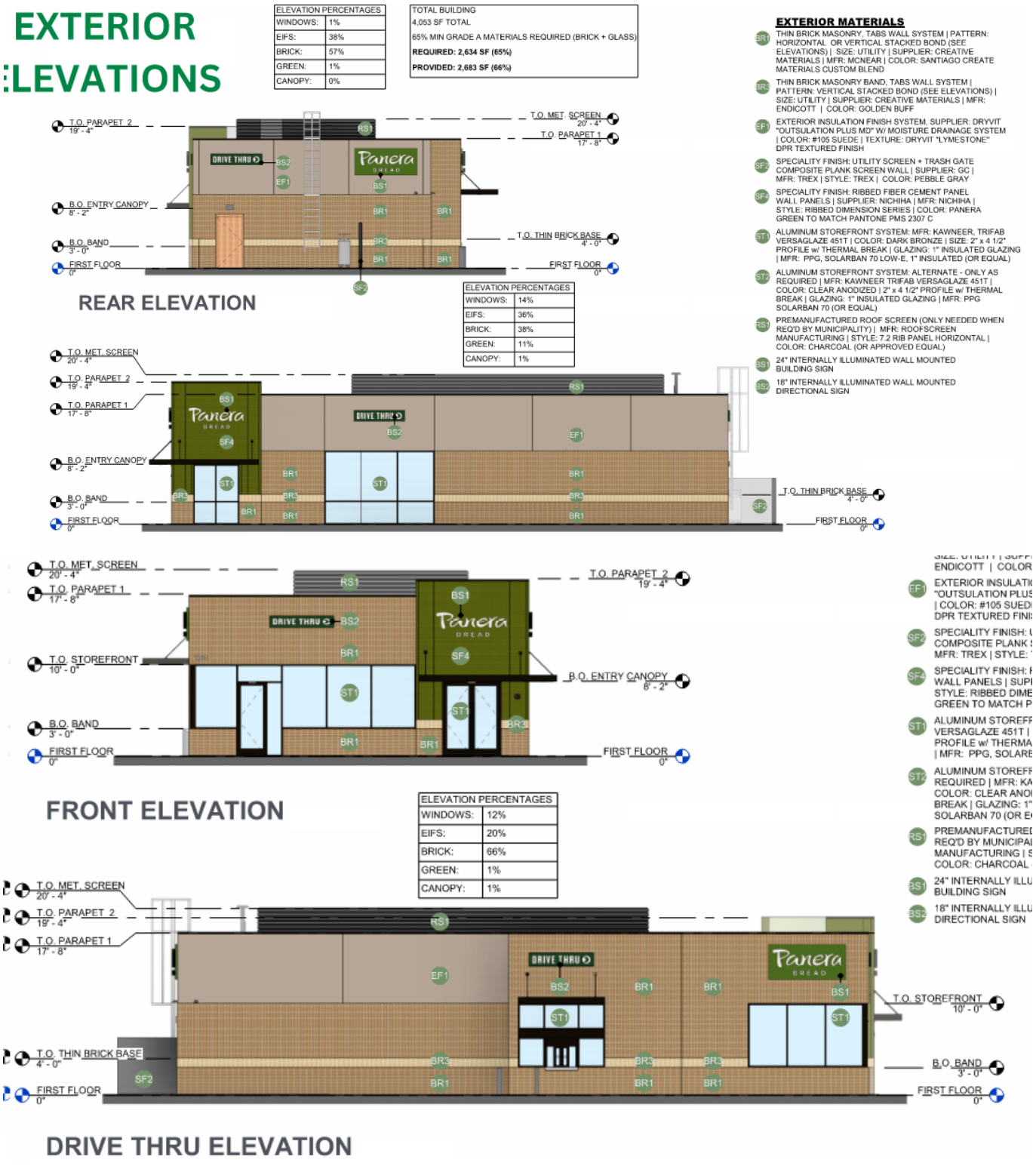


**Exterior Materials**

***Mechanical Screening***

The Applicant is proposing mechanical equipment on the roof of the building. Per City Code, rooftop mechanical equipment must be screened from all property lines of residential and adjacent roads rights-of-way with raised parapet or with comparable and compatible exterior building

materials. The Applicant is proposing to screen rooftop mechanical screening which will block views from the adjacent right-of-way. Final material shall complement the proposed structure per city code.

***Trash Enclosure***

Trash enclosures are regulated by City Code Title 11-3-8 and are required to be setback at least 10 feet from all property lines and shall be situated on a poured-in-place concrete base that extends at least 6 feet beyond the opening of the door. The walls shall be a minimum 6 feet in height and of a masonry material or composite fencing consistent with the principal structure. All doors shall be of an opaque maintenance free design that is not chain link with vinyl slats. The Applicant has proposed constructing a trash enclosure to all minimum specifications outlined in City Code including use of materials consistent with the principal structure.

***Stormwater***

A new stormwater management system is proposed for the site with a basin in the northwest corner and connection to existing stormwater infrastructure to manage stormwater and meet best management practices. The stormwater plan will be required to meet all City Code standards and comments in the Bolton and Menk plan review memo dated 2/17/26. A stormwater maintenance agreement is required for the maintenance of the private stormwater BMP infrastructure and shall be required prior to issuance of a building permit.

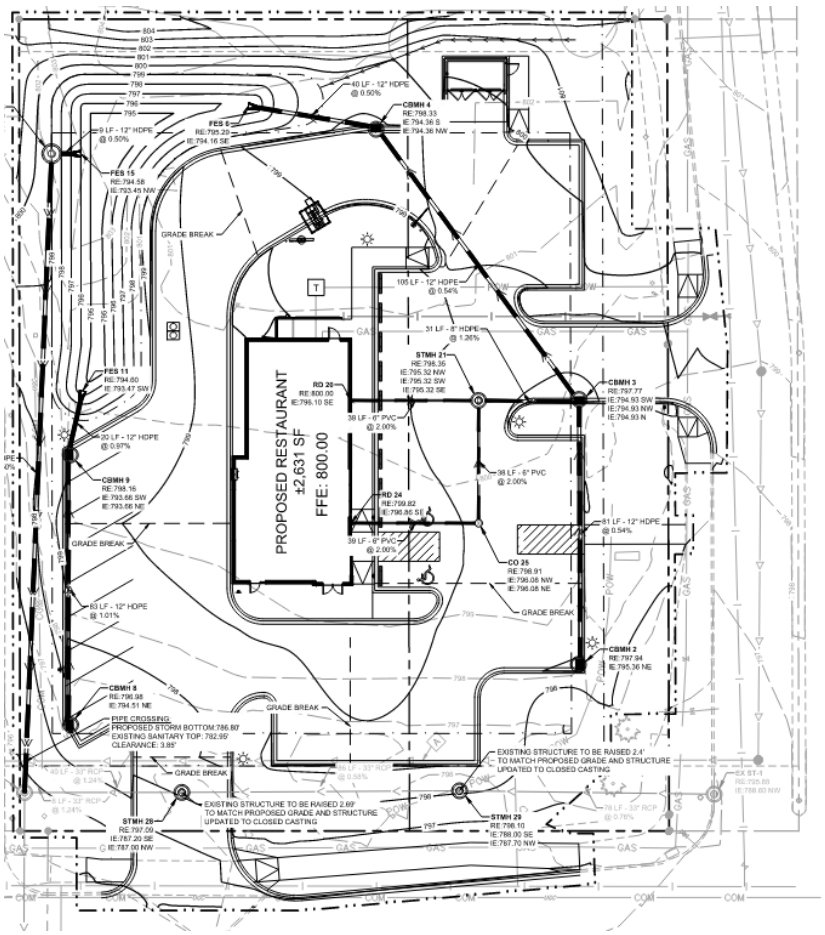


**Stormwater Plan**

***Utilities***

A new water service to the building will be connected to the water main on the east side of the site, and a new sanitary service will connect to the sewer on the south side of the site. Stormwater discharge from the basin will be connected to an existing manhole on the south side of the site.

An existing utility easement on the southern side of the property was established to provide access to the water, storm, and sewer pipes extending west to east across the site. The easement did not encompass the sanitary sewer pipe; therefore, the Applicant will be required to provide an additional easement to ensure the city has access to the sanitary sewer pipe.

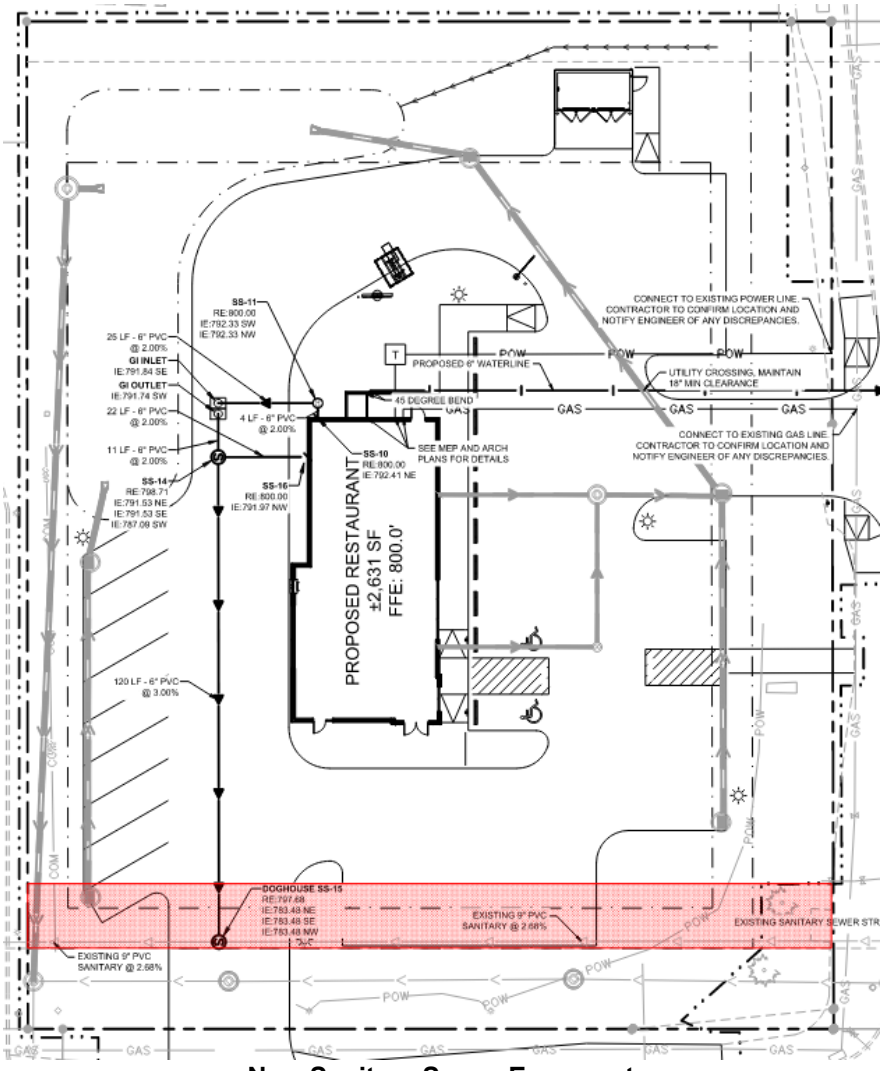


**New Sanitary Sewer Easement**

As this property was originally platted in 1888 as multiple lots, it does have the typical 10-foot perimeter drainage and utility easements around the entire perimeter of the property. A 10-foot perimeter drainage and utility easement is required to be recorded for the remainder of the property prior to issuance of a building permit.

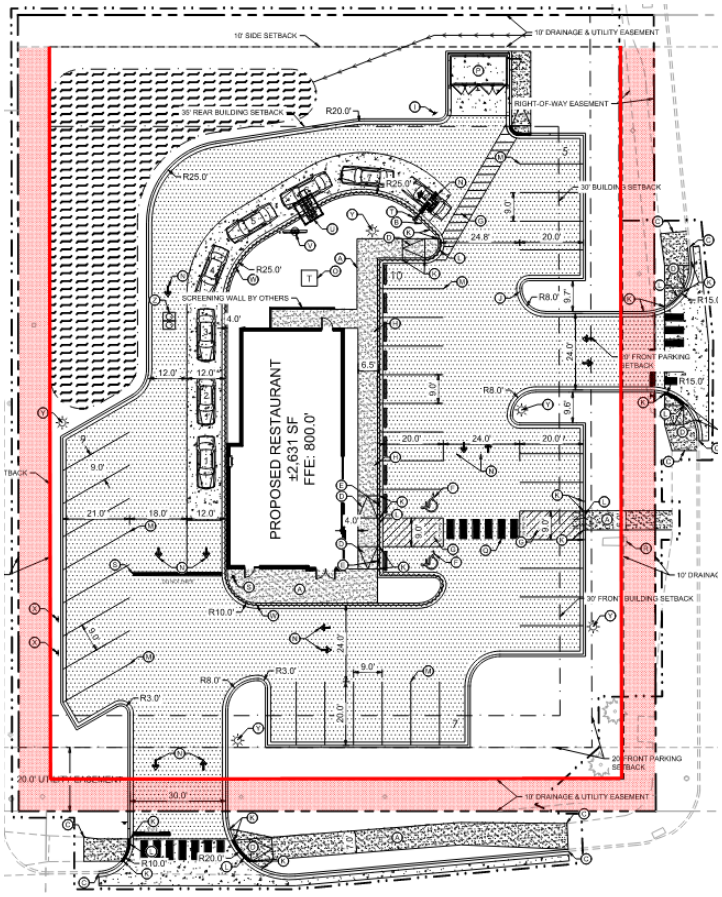


**Required 10-Foot Drainage and Utility Easement**

***Impervious Surface Coverage***

Maximum impervious surface coverage in the Mixed-Use Business District is 70 percent of the total lot area. Existing impervious surface is at 67 percent, and the Applicant proposes to decrease impervious surface to 54.85 percent.

***Public Hearing Notices***

The public hearing notice for the February 23, 2026, Planning Commission meeting was published in the *Saint Paul Pioneer Press* and mailed to 16 property owners within 500 feet of the proposed project on February 11, 2026. Staff has not received any comments at the time of writing the report.

***Planning Commission Meeting***

The City's Planning Commission reviewed this proposal and held a public hearing at their February 23, 2026, meeting. One clarifying question was requested by the commission as follows:

- Did the City work with the Applicant to try and eliminate the pylon sign and replace it with a monument sign to bring the site under desired beautification standards within the city?
    - Staff clarified that discussion was had with the applicant to remove the existing pylon sign; however, it is a legal non-conforming sign that is permitted to remain as long as the non-conformity is not expanded. The Applicant made it clear that this was a highly desired feature of the site as it will provide site line advertisement from Highway 61. Staff further related that the Applicant was willing to reduce overall

square footage of the sign by removing the lower cabinet of the existing sign, which would reduce non-conformity.

- The Applicant stated that due to the location being tucked away from Highway 61 and 80th Street, this was a very desirable feature for the Panera team to locate here.

The Commission unanimously voted (4-0) to recommend approval.

## Recommendation

That the that the City Council Take the following actions:

1. Adopt Resolution 2026-036 approving a Site Plan Review for the construction of a restaurant and associated site improvements to be located at 7162 East Point Douglas Road South.

2. Adopt Resolution 2026-037 approving a Conditional Use Permit for a Restaurant with a Drive-up Window to be located at 7162 East Point Douglas Road South.

3. Approve the Permanent Utility Easement, Encroachment Agreement, Permanent Drainage and Utility Easement, Permanent Sidewalk Easement, and the Stormwater Management and Facilities Agreement with DCJ Cottage Grove, LLC.

**Attachments**
Site and Civil Plans Dated 1/28/2026
Floor Plans and Elevations Dated 1/28/2026
Stormwater Report
Bolton & Menk Engineering Memorandum Dated 2/17/2026
Encroachment Agreement
Permanent Drainage and Utility Easement
Utility Easement
Sidewalk Easement
Stormwater Management Facilities Agreement

CITY OF COTTAGE GROVE, MINNESOTA
CITY COUNCIL
RESOLUTION 2026-036

**A RESOLUTION APPROVING A SITE PLAN REVIEW FOR THE CONSTRUCTION OF A RESTAURANT WITH A DRIVE-UP WINDOW AND ASSOCIATED SITE IMPROVEMENTS LOCATED AT 7162 EAST POINT DOUGLAS ROAD SOUTH**

WHEREAS, CA Commercial Development, on behalf of DCJ Cottage Grove, LLC, applied for a Site Plan Review for the construction of a 2,631 square foot restaurant with a drive-up window and associated site improvements located at 7162 East Point Douglas Road. The proposed 2,631 square foot structure will include a drive-up window on property legally described below:

> The Westerly 80 feet of the Southwesterly 250 feet of Lot 12 and the Southwesterly 250 feet of Lot 13, located in Block 3 of St. Paul Park Acre Lots, Jerrard's Plat, Washington County, Minnesota
>
> Commonly known as 7162 East Point Douglas Road South, Cottage Grove, Washington County, State of Minnesota.

WHEREAS, public hearing notices were mailed to property owners within 500 feet of the property, and a public hearing notice was published in the St. Paul Pioneer Press; and

WHEREAS, a planning staff report, which detailed specific information on the property and the application request, was prepared and presented; and

WHEREAS, a Conditional Use Permit is required to operate the Restaurant with a Drive-Up Window; and

WHEREAS, the public hearing was open for public testimony. No public testimony was received. The applicant attended the public hearing and staff answered questions from the Planning Commission; and

WHEREAS, the Planning Commission unanimously (4-to-0 vote) recommended that the City Council approve the Site Plan Review for the construction of a 2,631 square foot restaurant with a drive-up window and site improvements located at 7162 East Point Douglas Road South, at their February 23, 2026, meeting.

NOW, THEREFORE BE IT RESOLVED, the City Council of the City of Cottage Grove, Washington County, Minnesota, hereby approves the Site Plan Review for the construction of a Restaurant with Drive-Up Window and associated site improvements located at 7162 East Point Douglas Road South, legally described above, subject to the conditions below:

General Development

1. The project shall be completed in accordance with the plans submitted as amended by the conditions of approval. Any significant changes to the plans, as determined by planning staff, shall require review and approval by the Planning Commission and City Council.

2. All applicable permits (i.e., building, demo, electrical, grading, right-of-way, and mechanical) and a commercial plan review packet must be completed, submitted, and approved by the City prior to the commencement of any construction activities. Detailed construction plans must be reviewed and approved by the Building Official, City Engineer, and Fire Marshal. All applicable fees and letters of credit shall be received by the City prior to issuance of any permits.

3. Site Plan Review approval shall expire one year from the date of City Council approval unless a building permit has been requested or a time extension has been granted by the City Council. The City Council may extend the expiration date of such approval upon written application by the entity to whom the approval was granted.

4. A Stormwater Management Agreement shall be recorded prior to issuance of a building permit.

5. The Applicant shall provide acceptance of the environmental review of the site by the Minnesota Pollution Control Agency prior to issuance of a building permit.

Landscaping

6. Installation of landscaping shall occur in a timely fashion and be consistent with an approved plan. Prior to the issuance of a building permit, a letter of credit in the amount of 150 percent of the landscape estimate shall be submitted to the City as required by City ordinance. The financial guarantee shall be held until all required plantings are installed. At such time of installation, the Planning Department shall conduct an inspection to verify compliance with the landscape plan. If the inspection is approved, 50 percent of the financial guarantee shall be released. One year from the date of initial inspection, a follow-up inspection shall be conducted to verify survivability. If the follow-up inspection is approved, the remainder of the financial guarantee shall be released.

7. Irrigation shall be provided for all landscaped areas. The irrigation system shall consist of an underground sprinkling system that is designed by a professional irrigation installer to meet the water requirements of the site's specific vegetation. The system shall be detailed on the final landscape plan prior to issuance of a building permit.

Construction and Grading

8. An NPDES Permit is required. The grading and erosion control plan must comply with NPDES Permit requirements and city grading permit requirements. Erosion control devices must be installed prior to commencement of any grading activity. Erosion control must be performed in accordance with the recommended practices of the Minnesota Stormwater Manual and the conditions stipulated in Title 9-7-1, Erosion Control During Construction, of the City's Subdivision Ordinance. The Applicant shall be responsible for the costs for the City to inspect the site in relation to erosion control conformance.

9. The Applicant must provide the City with an as-built survey of private utilities and grades.

10. The Applicant will be required to conduct all major activities to construct the improvements during the following hours of operation:

| | |
|---|---|
| Monday through Friday | 7:00 A.M. to 7:00 P.M. |
| Saturday | 9:00 A.M. to 7:00 P.M. |
| Sunday | Not Allowed |

Any deviations from the above hours are subject to approval of the City.

11. The Applicant shall, within 24 hours, or more often if required by the City Engineer, clear from the public streets and property any soil, earth, or debris resulting from construction work by the Applicant or its agents or assigns. All debris, including brush, vegetation, trees, and demolition materials, shall be properly disposed of off-site; burying construction debris, trees, and other vegetation is prohibited. Burning of trees and structures is prohibited, except for fire training only.

Performance Standards

12. The only permitted modification to the legal non-conforming sign is replacement of the sign face. The lower sign cabinet shall be removed prior to issuance of a Certificate of Occupancy. All signs proposed require a separate sign permit.

13. The Applicant shall enter into an encroachment agreement with the City for the proposed private sidewalk within the East Point Douglas Road right-of-way prior to the issuance of a building permit.

14. All proposed mechanical equipment shall be screened from view of the adjacent road right-of-way and be composed of material that is complementary to the proposed building.

15. A 10-foot perimeter drainage and utility easement is required to be recorded prior to the issuance of a building permit.

16. The Applicant shall record a utility easement encompassing all city utility infrastructure along the southerly property line prior to issuance of a building permit.

17. The Applicant shall record a sidewalk easement that covers the sidewalk along the southwestern side of the property which is not incorporated in public right-of-way. The easement shall be recorded prior to issuance of a building permit.

18. The Applicant shall remove the paved bench area along the sidewalk at the southeast corner of the property prior to issuance of a certificate of occupancy.

19. The Applicant grants the City, its agents, employees, officers, and contractors permission to enter the site to perform all necessary inspections during grading and construction activities.

20. Dust control measures must be in place to prevent dust and erosion, including, but not limited to daily watering, silt fences, and seeding. The City Engineer may impose reasonable measures to reduce dust at the site.

Passed this 4th day of March 2026.

Myron Bailey, Mayor

Attest:

Tamara Anderson, City Clerk

CITY OF COTTAGE GROVE, MINNESOTA
CITY COUNCIL
RESOLUTION 2026-037

**A RESOLUTION APPROVING A CONDITIONAL USE PERMIT FOR A RESTAURANT WITH A DRIVE-UP WINDOW, LOCATED AT 7162 EAST POINT DOUGLAS ROAD SOUTH**

WHEREAS, CA Commercial Development, on behalf of DCJ Cottage Grove, LLC, applied for a Conditional Use Permit for a restaurant with a drive-up window located at 7162 East Point Douglas Road South, on property legally described below:

The Westerly 80 feet of the Southwesterly 250 feet of Lot 12 and the Southwesterly 250 feet of Lot 13, located in Block 3 of St. Paul Park Acre Lots, Jerrard's Plat, Washington County, Minnesota

Commonly known as 7162 East Point Douglas Road South, Cottage Grove, Washington County, State of Minnesota.

WHEREAS, public hearing notices were mailed to property owners within 500 feet of the property, and a public hearing notice was published in the St. Paul Pioneer Press; and

WHEREAS, a planning staff report, which detailed specific information on the property and the application request, was prepared and presented; and

WHEREAS, the public hearing was open for public testimony. No public testimony was received. The applicant attended the public hearing and staff answered questions from the Planning Commission; and

WHEREAS, the Planning Commission unanimously (4-to-0 vote) recommended that the City Council approve the Conditional Use Permit for a Restaurant with a Drive-Up Window located at 7162 East Point Douglas Road South, at their February 23, 2026, meeting.

NOW, THEREFORE BE IT RESOLVED, the City Council of the City of Cottage Grove, Washington County, Minnesota, hereby approves the Conditional Use Permit for a Restaurant with Drive-Up Window and associated site improvements at 7162 East Point Douglas Road South, located on the property legally described above, subject to the conditions below:

<u>General Development</u>

1. The project shall be completed in accordance with the plans submitted as amended by the conditions of approval. Any significant changes to the plans, as determined by planning staff, shall require review and approval by the Planning Commission and City Council.

2. All applicable permits (i.e., building, demo, electrical, grading, right-of-way, and mechanical) and a commercial plan review packet must be completed, submitted, and approved by the City prior to the commencement of any construction activities. Detailed construction plans must be reviewed and approved by the Building Official, City Engineer, and Fire Marshal. All applicable fees and letters of credit shall be received by the City prior to issuance of any permits.

3. Conditional Use Permit approval shall expire one year from the date of City Council approval unless a building permit has been requested or a time extension has been granted by the City Council. The City Council may extend the expiration date of such approval upon written application by the entity to whom the approval was granted.

Performance Standards

4. Rubbish, waste, and recycling containers shall be stored within an appropriately sized enclosed structure compliant with City ordinance screening requirements and shall always be maintained so as not cause odors or other public nuisances.

5. The only permitted modification to the legal non-conforming sign is replacement of the sign face. The lower sign cabinet shall be removed prior to issuance of a Certificate of Occupancy. All proposed signs require a separate sign permit.

6. The proposed Outside Dining Area shall conform to the approved plans and must maintain compliance with the zoning standards for outdoor seating, including:

   a. Seating areas shall not interfere with circulation in any required parking, loading, maneuvering, or pedestrian area.
   b. Seating shall be in a controlled or cordoned area acceptable to the City with at least one opening to an acceptable pedestrian walk.
   c. Seating shall remain 150 feet from any residential use.
   d. No public address system or external music, live or recorded, shall be audible from a nonbusiness or nonindustrial use or district.
   e. The seating area shall have an improved and maintained surface.
   f. Seating shall be located so as not to compromise safety. Seating shall not obstruct the entrance or any required exits or be located on landscaping or parking areas. If located on private sidewalks or walkways, it shall be located so as to leave a minimum of a four (4) foot wide passage for pedestrians. Applicable building and fire codes for ingress and egress shall be met.
   g. Additional parking for thirty (30) outdoor seats or less is not required. Any additional seating over thirty (30) seats shall provide required parking based on one (1) space per four (4) seats.
   h. The outdoor seating area shall be subordinate to the principal use and shall not exceed thirty percent (30%) of the square footage of the principal use building space. An outdoor seating area exceeding thirty percent (30%) requires a conditional use permit.
   i. The outdoor seating area shall be defined with the use of landscaping and/or permanent attractive fencing.

7. All proposed mechanical equipment shall be screened from view of the adjacent road right-of-way and be composed of material that is complementary to the proposed building.

8.. The Applicant grants the City, its agents, employees, officers, and contractors permission to enter the site to perform all necessary inspections during grading and construction activities.

Passed this 4th day of March 2026.

Myron Bailey, Mayor

Attest:

Tamara Anderson, City Clerk

BOLTON & MENK
Real People. Real Solutions.

3507 High Point Drive North
Bldg. 1 Suite E130
Oakdale, MN 55128

Ph: (651) 704-9970
Bolton-Menk.com

# MEMORANDUM

**Date**: 02/17/2026

**To**: Paul Sponholz, PE

**From:** Mike Boex, PE

**Subject**: Panera Plan Review
City of Cottage Grove, MN
Project No.: 26X.142531.000

This memo summarizes the review of the Panera located at 7162 East Point Douglas Road, submitted by Kimley Horn, dated 1/28/2026.

**Site Development Plans**

Sheet C000:

1. On the final plans, identify the vertical datum of the benchmarks used on the project.
2. On the final plans, please add a note on the cover sheet that the City of Cottage Grove's Standard Specifications for Street and Utility Construction shall govern for all improvements within the public right-of-way or public easement.

Sheet C200:

3. The city will provide old site plans for reference of existing sewer and water services, although accuracy shall be independently verified by the designer.
4. The existing concrete pad (former bench pad) beyond the existing sidewalk on East Point Douglas Road should be removed with this project.
5. The City will be reconstructing 80th Street in 2026, including the portion of East Point Douglas Road south of 80th Street to the intersection of the frontage road (also East Point Douglas Rd). There will be portions of time (approximate end of May to early August) when the section of East Point Douglas Road south of 80th Street will be closed for construction, so access to the site will need to occur from the frontage road. More coordination will need to occur during construction, once the city's contractor determines a schedule.
    a. The frontage road portion of East Point Douglas Road along TH-61/10 will be reconstructed in 2027.

Sheet C400:

6. Concrete driveway aprons shall be constructed in accordance with city standard detail STR-17.
    a. As depicted, the concrete apron appears to extend too far into the street.
    b. The apron on the east side of the site shall be placed prior to wear course paving on East Point Douglas Road (approximately October, schedule to be coordinated with the City during construction).



Bolton & Menk is an equal opportunity employer.

7. The exposed 2-ft exposed aggregate strip should be provided for sidewalk work on the east side of the site, matching the existing conditions.
8. An encroachment agreement for the private sidewalk in right-of-way will be required.
9. Generally, a 6-ft sidewalk should be provided along the frontage road.
    a. On the northwest side, sidewalk should be removed to and connect to the existing pedestrian ramp at the neighboring property. The new sidewalk can transition from the existing 8-ft wide ramp to the new 6-ft ramp proposed with this project. 6-ft walk can then be extended along the south side of the property. A 2-ft exposed aggregate strip shall be provided at any point where the sidewalk is 2-ft or less behind the curb and gutter.
10. Clarify why wheel stops are being provided when it appears 6" barrier curb is proposed, based on elevations on Sheet C500 and keynotes related to curb transitions and curb ramps on this sheet.
11. Easements:
    a. Provide additional right-of-way easement for the existing sidewalk in southeast corner of the site. The easement should extend 3-ft beyond the edge of the sidewalk in all locations
    b. Provide a drainage and utility easement over the sanitary sewer main along the south side.
        i. The easement should extend 15-ft north of the existing sanitary sewer pipe and as far south as the existing Drainage and Utility easement over the storm pipe.
    c. Provide a perimeter 10-ft perimeter drainage and utility easement on the other three-sides of the property.
12. Do not provide crosswalk markings on the concrete aprons in city right-of-way or easement.
13. Stop bars and stop signs appear to be depicted but are not labeled with keynotes.

<u>Sheet C500:</u>

14. Label the 100-year high water level within the filtration basin.
15. Clearly label all basin and local drainage emergency overflow locations and elevations on the plan to ensure conformance to city freeboard standards.
16. The last storm structure prior to a pond shall include a sump.
    a. Please add 3' sumps within CBMH4 and CBMH9 for pretreatment.
17. Freeboard Standards:
    a. For stormwater facilities with emergency overflows, the low adjacent grade elevation for all new structures must be a minimum of 3 feet above both the peak surface water elevation for the 100-year precipitation event and 2 feet above the emergency overflow elevation of any immediately adjacent new stormwater basin.
    b. For backyard and side-yard conveyance and temporary ponding areas, there must be at least 1 foot between the overland overflow elevation and the low adjacent grade elevation of the adjacent structure.

c. Freeboard: The Building FFE is shown on the plans as elevation 800.0 feet. The highwater level simulated within the filtration basin is 797.48. This does not meet the minimum 3 feet freeboard requirements between the 100-year HWL and the FFE. Additionally, there needs to be a minimum 2 feet of freeboard between the EOF and the FFE. Please work to comply with the freeboard requirements.

Sheet C501:

18. Provide confirmation of existing sanitary pipe elevations along the south side of the site vs. the proposed storm crossing. The city's records (attached) indicate the sewer may be at a higher elevation than depicted on these plans.
19. Confirm and submit documentation of the existing storm sewer pipe sizes/elevations, as well as the diameter and materials of the existing manhole at the proposed storm sewer connection. There appears to be an intermediate slab and cone within the structure, so the connection should be better understood.
    a. It is not clear what the existing storm pipe labels (size, length, grade) are pointing to.
20. Evaluate potential conflicts with existing utilities; the proposed light pole should be shifted so it is not immediately on top of the existing sanitary sewer. Moving the light north towards the parking lot 10-ft from the sewer is preferred.
21. Filter Basin:
    a. Please show the layout and elevations of the proposed filter basin drain tile on the plans.
    b. Please show drain tile sizes and installation details including connections to the outlet structure and cleanouts. Please be consistent with the plans and the HydroCAD model (model simulates the drain tile as 6" diameter at elevation 793 and 0% grade).
    c. Filtration BMP Notes: The stormwater narrative report explains that: "*Due to the existing soil conditions on the site, the previous use of the property, and its proximity to the wellhead protection 10-year composite groundwater capture zone, filtration techniques will be used to achieve water quality standards*." The filtration BMP notes include comments focused on infiltration basins such as the requirement: "After initial excavation and rough grading, provide a minimum of two (2) double ring infiltrometer tests with the infiltration area…" Please review the notes to focus on the proposed filtration basin needs.
    d. FES 6 and FES 11 labeled invert elevations are 794.16 and 793.47, which are below the bottom elevation of the filter basin. Please match the invert elevations to the proposed filter bottom elevation and extend the pipes to the filter bottom.
    e. Please include typical cross section and details of filtration basin.
    f. Filter media: For a successful vegetation establishment, the City recommends providing a Filter Topsoil Borrow (MnDOT 3877.2G) consisting of 70% sand (meeting the gradation requirements of 3126 "Fine Aggregate for Portland Cement Concrete") and 30% Grade 2 Compost (MnDOT 3890). Lower compost levels have typically proved difficult when establishing vegetation in basins. Please include a filtration soil media within the filter basin to match the City standard mix or explain the approach.

Sheet C502:

22. Detail STO-16 represents a skimmer structure with a submerged opening in the front of the structure. Sheet C501 depicts a pipe and flared-end section in front of the structure, so it doesn't appear detail STO-16 is appropriate. Please create a detail for the structure, labeling rim and outlet pipe elevations, and if a weir wall is intended within the structure, label and depict those features.

Sheet C600:

23. Only DIP watermain will be allowed; please revise all plan notes accordingly (#5, #12).
    a. A wet tap of the existing city main should be noted (city detail WAT-5).
24. The proposed water connection will need to consider the city's schedule related to the 2026 80th Street/East Point Douglas Rd project. This connection cannot impact new work on East Point Douglas Rd in 2026. If schedules cannot be coordinated, the water connection should occur on the frontage road side of the site.
25. Similar to previous comments, provide confirmation of existing sanitary pipe elevations along the south side of the site to ensure the sanitary design as proposed will work.
26. Clarify "Doghouse SS-15" as it appears to be a new manhole.

Sheet C601:

27. It doesn't appear that detail SER-2 will be used. Remove if it will not be used or clarify where it's intended.

Sheet L100:

28. The city will allow shrubs in utility easements, acknowledging they are the responsibility of the property owner and will be at risk for replacement if the City needs to do any utility work.
    a. Similarly, trees can remain in the 10-ft easement that is being requested on the west side of the site acknowledging they could be at risk of future city work.
29. It is not recommended to plant trees within 5-ft of the private water service pipe or private storm sewer.

Sheet L101:

30. Irrigation: clarify irrigation is intended for all sodded areas onsite, including turf areas in the public right-of-way abutting East Point Douglas Road.

**Stormwater:**

31. Consider using an infiltration basin in lieu of filtration. The site is outside the 10-year capture zone.
32. HydroCAD:
    a. HydroCAD is simulating two primary outlets for the filter basin 1P: 18" RCP and a 4' weir at elevation 796.72 feet (elevation of the water quality treatment volume). If the weir is intended to flow to the outlet pipe, please adjust the routing within HydroCAD.
    b. Sheet C501 shows a 12" HDPE filter basin outlet pipe at elevation 793.4 and 3.5% grade. HydroCAD is simulating an 18" RCP at elevation 793 and 1.5% grade. Please update the plans and model to be consistent on pipe diameter, material, slope and elevation.
33. MIDS Water Quality Model:
    a. For water quality analyses using the MIDS model, the South Washington Watershed District (SWWD) Standards Manual (November 2023) includes required adjustments to

the MIDS model listed below. Please update the model retention requirement and TP EMC values.

| *Model* | *Parameter* | *Required* |
|---|---|---|
| *MIDS* | *Retention Requirement* | *1.0 inch* |
| *MIDS* | *Total Phosphorus EMC, Change from Default 0.3 mg/l* | *0.31 mg/l* |

The Standards Manual is available at the link below:
SWWD_Standards-Guidance-Manual_Final_11062023.pdf (swwdmn.org)

34. The water quality summary table on Page 6 of the Stormwater Report has the "TSS" and "TP" row names flipped in the table. Please correct the row names. The proposed loading and percent retained values shown in the table reflect the BMP outflows rather than the outflows from the whole site. Please update the water quality summary table to include proposed loads and percentage retained values for the whole site.

35. The conclusion listed on Page 7 of the Stormwater Report indicates that the proposed project TP loading exceeds the allowable loading by 0.53 lbs./year. Please correct the exceedance value to 0.78 lbs./year as shown in the table below.

    a. If the on-site BMPs are not sufficient to achieve the required TP rates, one option is to convert the filter basin to an infiltration basin, another option is to pay a TP mitigation cash dedication. The cost for commercial development is $22,868.00 per lb. of TP removal (or $17,837 for 0.78 lbs. of credit).

| Total Phosphorus Credits | | |
|---|---|---|
| Allowable loading rate (0.22 lbs/acre/year) | 0.28 | Lb./Year |
| Total phosphorus load | 1.62 | Lb./Year |
| Total phosphorus removed by filter BMP | 0.56 | Lb./Year |
| Total Phosphorus Exported | 1.06 | Lb./Year |
| Excess phosphorus above allowable | 0.78 | Lb./Year |
| Cost of phosphorus credits ($22,868/lbs.) | $17,837 | $ |

36. Testing: The City will require post-construction testing to verify the filtration rate and drawdown period of any filtration basin.

37. The City will require an executed stormwater maintenance agreement for the proposed stormwater features on the site.

38. NPDES Construction Stormwater Permit: As this project disturbs more than 1 acre, an NPDES Construction Stormwater Permit and SWPPP will be required.

39. Models: Please note that digital copies of the final version stormwater models and shapefiles or CAD drawings of existing and proposed drainage areas are to be submitted to the city once the review and revision process is complete.

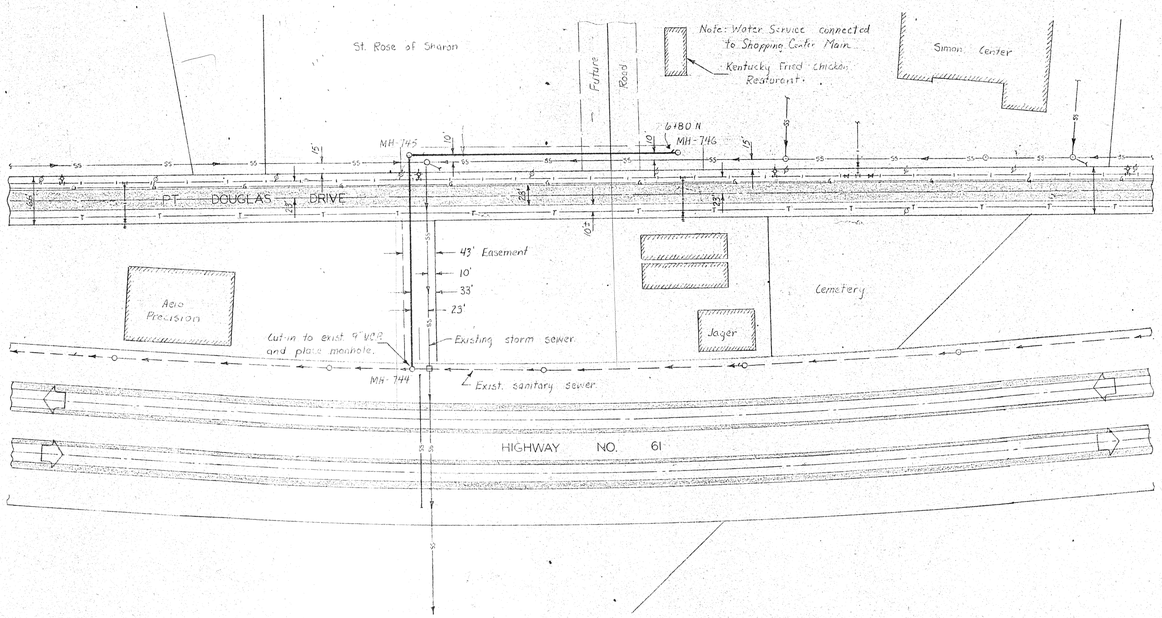


POINT DOUGLAS DRIVE

Scale: 1" = 100' Horz.
1" = 10' Vert.

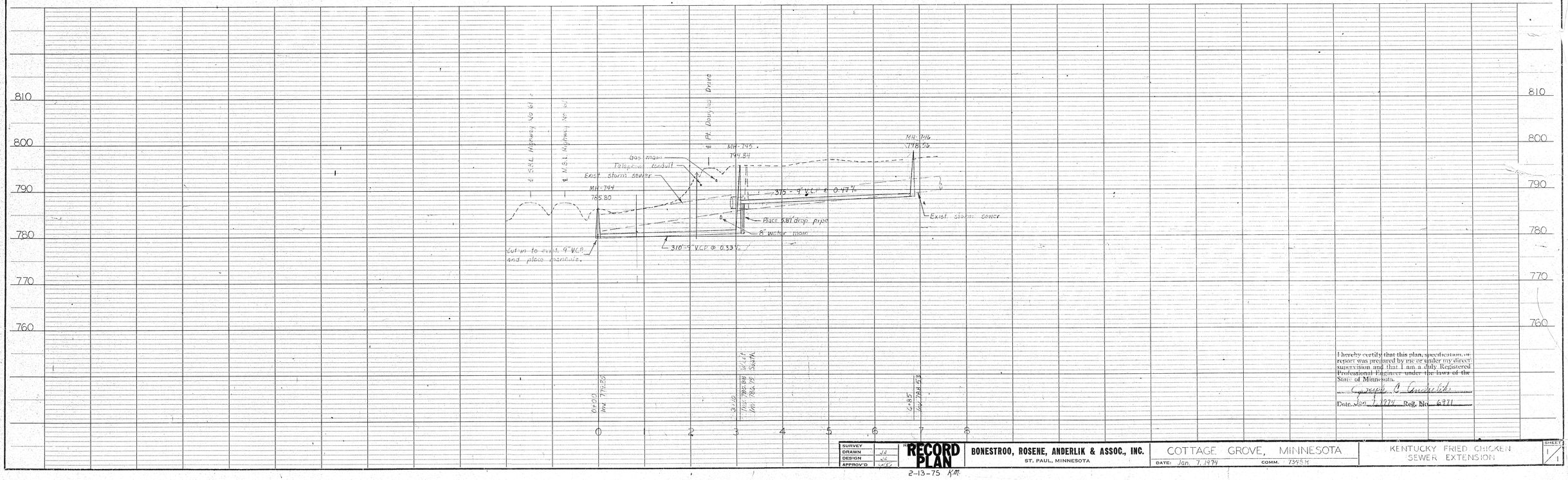


I hereby certify that this plan, specification, or report was prepared by me or under my direct supervision and that I am a duly Registered Professional Engineer under the laws of the State of Minnesota.

Joseph C. Anderlik

Date Jan. 7, 1974 Reg. No. 6971

| SURVEY | |
|---|---|
| DRAWN | JA |
| DESIGN | JA |
| APPROV'D | JAC |

RECORD PLAN

2-13-75 KM

BONESTROO, ROSENE, ANDERLIK & ASSOC., INC.
ST. PAUL, MINNESOTA

COTTAGE GROVE, MINNESOTA
DATE: Jan. 7, 1974 COMM. 7348H

KENTUCKY FRIED CHICKEN SEWER EXTENSION

SHEET 1/1

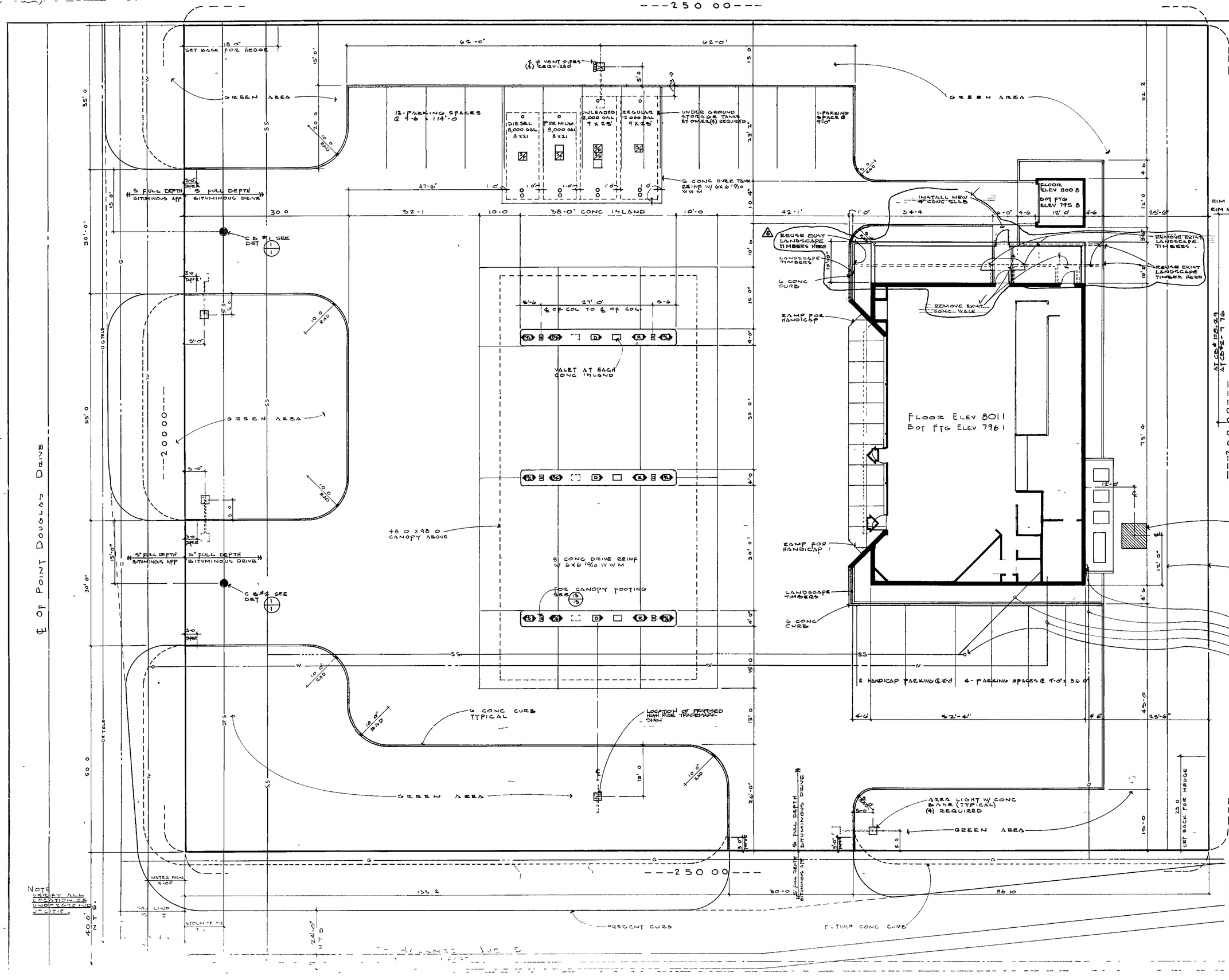


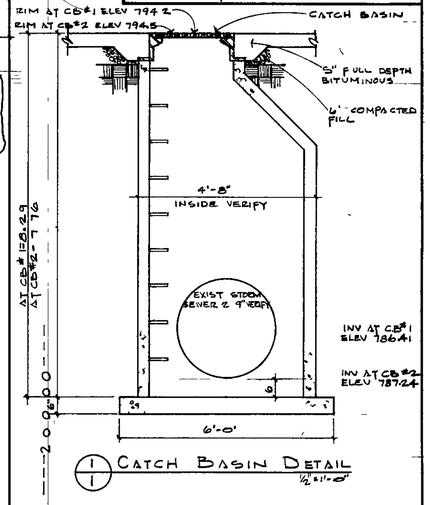


1/1 CATCH BASIN DETAIL
1/2" = 1'-0"

BENCH MARK:
TOP OF NUT OF FIRST HYD ELEV 798 04

N S P TRANSFORMER PAD AND TRANSFORMER BY N S P
TOP OF PAD ELEV 802 0

10' 0" EASEMENT

GAS METER
3/4 ϕ GAS SERVICE
4 ϕ HEAVY DUTY SAN SEWER
1 ϕ WATER SERVICE
C O FOR SAN SEWER

CITY OF COTTAGE GROVE
BUILDING INSPECTION DEPT
OFFICIAL [signature] DATE 1-30-85

| ISSUE NO. | DATE | DRAWN BY | CHECKED BY | ISSUE DATE |
|---|---|---|---|---|
| 5 | 1/4/85 | NEW ADDITION CB | | |
| 4 | 4/30/82 | CURB ADDED @ BLDG. CB | | |
| 3 | 11/25/81 | ISSUED FOR CONSTRUCTION CB | | |
| 2 | 11/13/81 | ADDITIONAL PARKING CB | | |
| 1 | 10/28/81 | ISSUED FOR PERMITS CB | | |

SUPERAMERICA
DIVISION OF ASHLAND OIL INC
SAINT PAUL PARK MINNESOTA

# SITE PLAN
# 7160 POINT DOUGLAS DRIVE
# COTTAGE GROVE, MINNESOTA

DRAWN BY C B | SCALE 1 - 10 0
APPROVED | P 4183-1

# PERMANENT DRAINAGE AND UTILITY EASEMENT

The undersigned Landowner for and in consideration of One and no/100 Dollars ($1.00) and other good and valuable consideration, the receipt whereof is hereby acknowledged, does hereby grant and convey to the City of Cottage Grove ("City") a permanent easement ("Permanent Easement") under, over, across, through and upon the following described land situated in the County of Washington, State of Minnesota, to wit:

## PROPERTY DESCRIPTION:

Real property in Washington County, Minnesota, described as follows:

The Westerly 80 feet of the Southwesterly 250 feet of Lot 12 and the Southwesterly 250 feet of Lot 13, located in Block 3 of St. Paul Park Acre Lots, Jerrard's Plat, Washington County, Minnesota

*Torrens Property Certificate: 67578*
PID: 17.027.21.22.0018

("Landowner's Property").

## PERMANENT EASEMENT DESCRIPTION

The Landowner does hereby grant and convey unto the City, its successors and assigns, the following:

> A permanent easement for drainage and utility purposes and all such purposes ancillary, incident or related thereto (hereinafter "Permanent Easement") under, over, across, through and upon that real property legally described on Exhibit A and depicted on Exhibit B, (hereinafter the "Permanent Easement Area") attached hereto and incorporated herein by reference.

The Permanent Easement rights granted herein are forever and shall include, but not be limited to, the construction, maintenance, repair and replacement of any sanitary sewer, storm sewer, water mains, storm water facilities, above ground and below ground drainage facilities, any utilities, underground pipes, conduits, culverts, other utilities and mains, and all facilities and improvements ancillary, incident or related thereto, under, over, across, through and upon the Permanent Easement Area.

The Permanent Easement rights further include, but are not limited to, the right of ingress and egress over the Permanent Easement Area to access the Permanent Easement for the purposes of construction, maintenance, repair and replacement of any sanitary sewer, storm sewer, water mains, storm water facilities, above ground and below ground drainage facilities any utilities, underground pipes, conduits, culverts, other utilities, mains and all facilities and improvements ancillary, incident or related thereto.

EXEMPT FROM STATE DEED TAX

The rights of the City also include the right of the City, its contractors, agents and servants:

(a) To enter upon the Permanent Easement Area at all reasonable times for the purposes of construction, reconstruction, inspection, repair, replacement, grading, sloping, and restoration relating to the purposes of the Permanent Easement; and

(b) To maintain the Permanent Easement Area, any City improvements and any underground pipes, conduits, or mains, together with the right to excavate and refill ditches or trenches for the location of such pipes, conduits or mains; and

(c) To remove from the Permanent Easement Area trees, brush, herbage, aggregate, undergrowth and other obstructions interfering with the location, construction and maintenance of the utility pipes, conduits, mains and above ground and below ground drainage facilities and to deposit earthen material in and upon the Permanent Easement Area; and

(d) To remove or otherwise dispose of all earth or other material excavated from the Permanent Easement Area as the City may deem appropriate.

The City shall not be responsible for any costs, expenses, damages, demands, obligations, penalties, attorneys' fees and losses resulting from any claims, actions, suits, or proceedings based upon a release or threat of release of any hazardous substances, petroleum, pollutants, and contaminants which may have existed on, or which relate to, the Permanent Easement Area or the Landowner's Property prior to the date hereof.

Nothing contained herein shall be deemed a waiver by the City of any governmental immunity defenses, statutory or otherwise. Further, any and all claims brought by Landowner or their successors or assigns, shall be subject to any governmental immunity defenses of the City and the maximum liability limits provided by Minnesota Statute, Chapter 466.

The Landowner, for itself and its successors and assigns, does hereby warrant to and covenant with the City, its successors and assigns, that they are well seized in fee of the Landowner's Property described above, the Permanent Easement Area described and depicted on Exhibit A and has good right to grant and convey the Permanent Easement herein to the City.

This agreement is binding upon the heirs, successors, executors, administrators and assigns of the parties hereto.

[Remainder of this page has been intentionally left blank]

IN WITNESS WHEREOF, the parties hereto have caused this document to be executed as of the day and year first above written.

**CITY:**
**CITY OF COTTAGE GROVE**

By:_____
Myron Bailey
Its Mayor

By:_____
Tamara Anderson
Its City Clerk

STATE OF MINNESOTA )
) ss.
COUNTY OF WASHINGTON )

On this _____ day of_____, 20___, before me a Notary Public within and for said County, personally appeared Myron Bailey and Tamara Anderson to me personally known, who being each by me duly sworn, each did say that they are respectively the Mayor and City Clerk of the City of Cottage Grove, the municipality named in the foregoing instrument, and that the said instrument was signed on behalf of said municipality by authority of its City Council and said Mayor and City Clerk acknowledged said instrument to be the free act and deed of said municipality.

_____
Notary Public

**LANDOWNER:**
**DCJ COTTAGE GROVE, LLC**

By: _____
Douglas Compton
Its: Manager

STATE OF ~~OHIO~~ West Virginia )
) ss.
COUNTY OF Greenbrier )

The foregoing instrument was acknowledged before me on this 25th day of February, 2026, by Douglas Compton, the Manager of DCJ Cottage Grove, LLC, an Ohio Limited Liability Company, on behalf of said company.

Ruthie A. Allen
Notary Public

OFFICIAL SEAL
NOTARY PUBLIC
STATE OF WEST VIRGINIA
RUTHIE A. ALLEN
200 Jackson Street
Alderson, WV 24910
My Commission Expires Feb. 20, 2027

**This instrument drafted by**
**and after recording, please return to:**
Korine L. Land (#262432)
LeVander, Gillen & Miller, P.A.
1305 Corporate Center Dr Suite 300
Eagan, MN 55121

**EXHIBIT A**
**LEGAL DESCRIPTION OF PERMANENT EASEMENT AREA**

A drainage and utility easement over, under and across the northwesterly 10.00 feet and the southwesterly 10.00 feet and the southeasterly 10.00 feet, lying southwesterly of the northeasterly 10.00 feet of the following described property:

The westerly eighty (80) feet of the Southwesterly Two Hundred Fifty (250) feet of Lot Twelve (12) and the Southwesterly Two Hundred Fifty (250) feet of Lot Thirteen (13), located in Block Three (3) of ST. PAUL PARK ACRE LOTS, JERRARD'S PLAT, according to the plat thereof on file and of record in the office of the registrar of titles, in and for Washington County, Minnesota.

# EXHIBIT B
# DEPICTION OF PERMANENT EASEMENT AREA

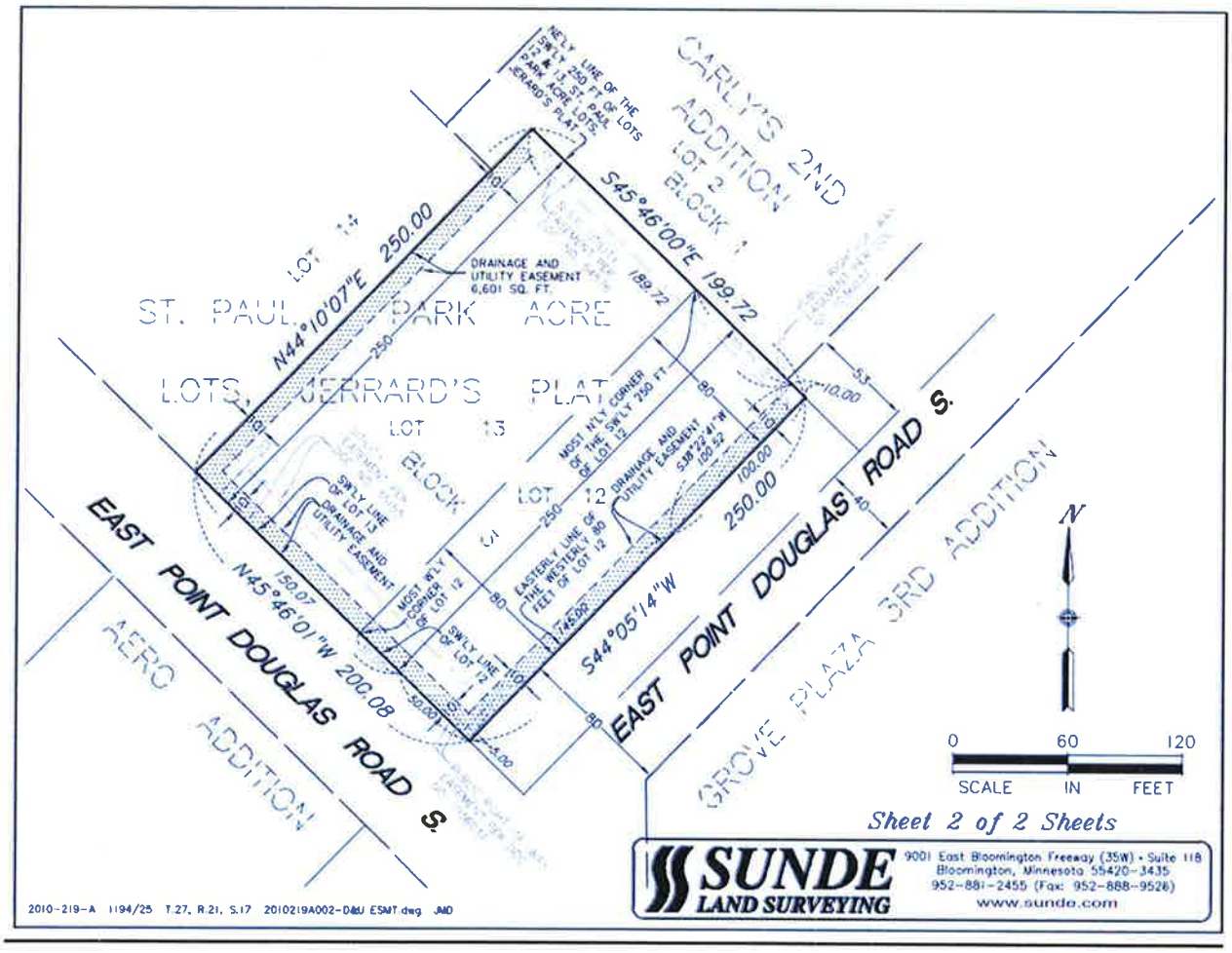

# PERMANENT UTILITY EASEMENT

The undersigned Landowner for and in consideration of One and no/100 Dollars ($1.00) and other good and valuable consideration, the receipt whereof is hereby acknowledged, does hereby grant and convey to the City of Cottage Grove ("City") a permanent easement ("Permanent Easement") under, over, across, through and upon the following described land situated in the County of Washington, State of Minnesota, to wit:

## PROPERTY DESCRIPTION:

Real property in Washington County, Minnesota, described as follows:

The Westerly 80 feet of the Southwesterly 250 feet of Lot 12 and the Southwesterly 250 feet of Lot 13, located in Block 3 of St. Paul Park Acre Lots, Jerrard's Plat, Washington County, Minnesota

*Torrens Property Certificate: 67578*
PID: 17.027.21.22.0018

("Landowner's Property").

## PERMANENT EASEMENT DESCRIPTION

The Landowner does hereby grant and convey unto the City, its successors and assigns, the following:

> A permanent easement for utility purposes and all such purposes ancillary, incident or related thereto (hereinafter "Permanent Easement") under, over, across, through and upon that real property legally described on Exhibit A and depicted on Exhibit B, (hereinafter the "Permanent Easement Area") attached hereto and incorporated herein by reference.

The Permanent Easement rights granted herein are forever and shall include, but not be limited to, the construction, maintenance, repair and replacement of any sanitary sewer, storm sewer, water mains, storm water facilities, above ground and below ground utilities, underground pipes, conduits, culverts, other utilities and mains, and all facilities and improvements ancillary, incident or related thereto, under, over, across, through and upon the Permanent Easement Area.

The Permanent Easement rights further include, but are not limited to, the right of ingress and egress over the Permanent Easement Area to access the Permanent Easement for the purposes of construction, maintenance, repair and replacement of any sanitary sewer, storm sewer, water mains, storm water facilities, above ground and below ground utilities, underground pipes, conduits, culverts, other utilities, mains and all facilities and improvements ancillary, incident or related thereto.

EXEMPT FROM STATE DEED TAX

The rights of the City also include the right of the City, its contractors, agents and servants:

(a) To enter upon the Permanent Easement Area at all reasonable times for the purposes of construction, reconstruction, inspection, repair, replacement, grading, sloping, and restoration relating to the purposes of the Permanent Easement; and

(b) To maintain the Permanent Easement Area, any City improvements and any underground pipes, conduits, or mains, together with the right to excavate and refill ditches or trenches for the location of such pipes, conduits or mains; and

(c) To remove from the Permanent Easement Area trees, brush, herbage, aggregate, undergrowth and other obstructions interfering with the location, construction and maintenance of the utility pipes, conduits, mains and above ground and below ground facilities and to deposit earthen material in and upon the Permanent Easement Area; and

(d) To remove or otherwise dispose of all earth or other material excavated from the Permanent Easement Area as the City may deem appropriate.

The City shall not be responsible for any costs, expenses, damages, demands, obligations, penalties, attorneys' fees and losses resulting from any claims, actions, suits, or proceedings based upon a release or threat of release of any hazardous substances, petroleum, pollutants, and contaminants which may have existed on, or which relate to, the Permanent Easement Area or the Landowner's Property prior to the date hereof.

Nothing contained herein shall be deemed a waiver by the City of any governmental immunity defenses, statutory or otherwise. Further, any and all claims brought by Landowner or their successors or assigns, shall be subject to any governmental immunity defenses of the City and the maximum liability limits provided by Minnesota Statute, Chapter 466.

The Landowner, for itself and its successors and assigns, does hereby warrant to and covenant with the City, its successors and assigns, that they are well seized in fee of the Landowner's Property described above, the Permanent Easement Area described and depicted on Exhibit A and has good right to grant and convey the Permanent Easement herein to the City.

This agreement is binding upon the heirs, successors, executors, administrators and assigns of the parties hereto.

[Remainder of this page has been intentionally left blank]

IN WITNESS WHEREOF, the parties hereto have caused this document to be executed as of the day and year first above written.

**CITY:**
**CITY OF COTTAGE GROVE**

By:_____
Myron Bailey
Its Mayor

By:_____
Tamara Anderson
Its City Clerk

STATE OF MINNESOTA )
) ss.
COUNTY OF WASHINGTON )

On this _____ day of_____, 2026, before me a Notary Public within and for said County, personally appeared Myron Bailey and Tamara Anderson to me personally known, who being each by me duly sworn, each did say that they are respectively the Mayor and City Clerk of the City of Cottage Grove, the municipality named in the foregoing instrument, and that the said instrument was signed on behalf of said municipality by authority of its City Council and said Mayor and City Clerk acknowledged said instrument to be the free act and deed of said municipality.

_____
Notary Public

**LANDOWNER:**
**DCJ COTTAGE GROVE, LLC**

By: _____
Douglas Compton
Its: Manager

STATE OF ~~OHIO~~ West Virginia )
) ss.
COUNTY OF Greenbrier )

The foregoing instrument was acknowledged before me on this 25th day of February, 2026, by Douglas Compton, the Manager of DCJ Cottage Grove, LLC, an Ohio Limited Liability Company, on behalf of said company.

_____
Notary Public

OFFICIAL SEAL
NOTARY PUBLIC
STATE OF WEST VIRGINIA
RUTHIE A. ALLEN
200 Jackson Street
Alderson, WV 24910
My Commission Expires Feb. 20, 2027

**This instrument drafted by**
**and after recording, please return to:**
Korine L. Land (#262432)
LeVander, Gillen & Miller, P.A.
1305 Corporate Center Dr Suite 300
Eagan, MN 55121

**EXHIBIT A**
**LEGAL DESCRIPTION OF PERMANENT EASEMENT AREA**

A utility easement over, under and across the northeasterly 17.00 feet of the southwesterly 37.00 feet of the westerly eighty (80) feet of the Southwesterly Two Hundred Fifty (250) feet of Lot Twelve (12) and the Southwesterly Two Hundred Fifty (250) feet of Lot Thirteen (13), located in Block Three (3) of ST. PAUL PARK ACRE LOTS, JERRARD'S PLAT, according to the plat thereof on file and of record in the office of the registrar of titles, in and for Washington County, Minnesota.

**EXHIBIT B**
**DEPICTION OF PERMANENT EASEMENT AREA**

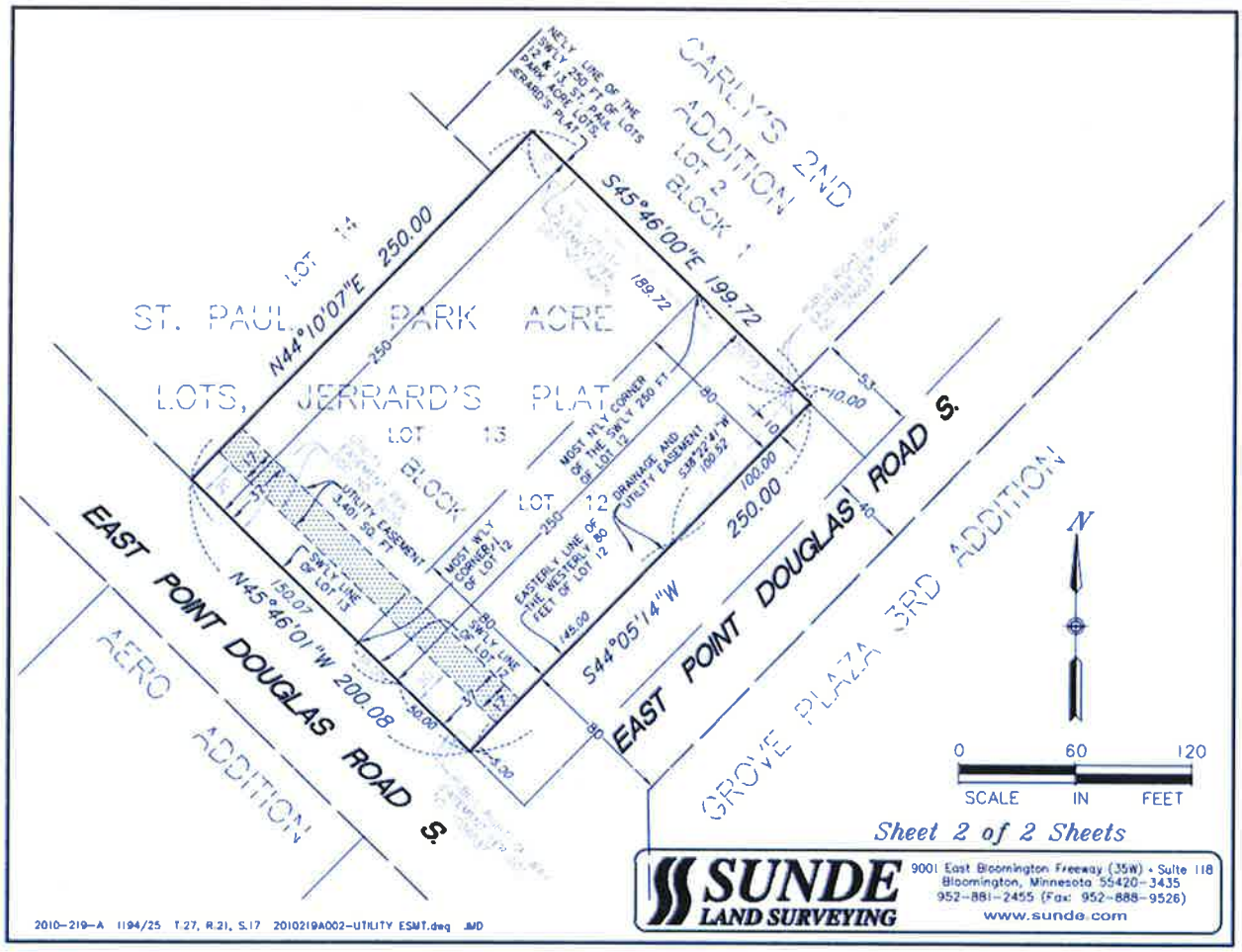

# PERMANENT SIDEWALK EASEMENT

THIS PERMANENT SIDEWALK EASEMENT ("Easement") is made, granted and conveyed this _____ day of _____, 2026 by and between DCJ Cottage Grove, LLC, an Ohio Limited Liability Company ("Landowner"), and the City of Cottage Grove, a Minnesota municipal corporation ("City").

## PROPERTY DESCRIPTION

Real property in Washington County, Minnesota, described as follows:

The Westerly 80 feet of the Southwesterly 250 feet of Lot 12 and the Southwesterly 250 feet of Lot 13, located in Block 3 of St. Paul Park Acre Lots, Jerrard's Plat, Washington County, Minnesota

*Torrens Property Certificate: 67578*
PID: 17.027.21.22.0018

("Landowner's Property").

## PERMANENT EASEMENT DESCRIPTION

Landowner for and in consideration of One Dollar and other good and valuable consideration, the receipt whereof is hereby acknowledged, does hereby grant and convey to the City, its successors and assigns, forever the following:

A permanent easement for Sidewalk purposes and all such purposes ancillary, incident or related thereto, including but not limited to a retaining wall, for construction, maintenance, improvement, repair and replacement, and restoration purposes and all such purposes ancillary thereto ("Permanent Easement"), under, over, across, through and upon that real property legally described on Exhibit A and depicted on Exhibit B ("Permanent Easement Area"), attached hereto and incorporated herein by reference.

EXEMPT FROM STATE DEED TAX

The rights of the City also include the right of the City, its contractors, agents and servants:

(a) To enter upon the Permanent Easement Area at all reasonable times for the purposes of construction, reconstruction, inspection, repair, replacement, grading, sloping, and restoration relating to the purposes of the Permanent Easement; and

(b) To maintain the Permanent Easement Area, together with the right to excavate and refill ditches or trenches for the location of such Sidewalks, retaining walls, streetlights, hydrants, curb, gutter or other street project improvements; and

(c) To remove from the Permanent Easement Area trees, brush, herbage, aggregate, undergrowth

and other obstructions interfering with the location, construction and maintenance of the Sidewalks, retaining walls, streetlights, hydrants, curb, gutter or other street project improvements and to deposit earthen material in and upon the Permanent Easement Area; and

(d) To remove or otherwise dispose of all earth or other material excavated from the Permanent Easement Area as the City may deem appropriate.

In consideration of the Permanent Easement, the City agrees to maintain, repair and provide snow removal of the Sidewalk within the Permanent Easement Area. The City shall be liable for any and all costs and expenses associated with maintaining and repairing the Permanent Easement Area.

The City shall not be responsible for any costs, expenses, damages, demands, obligations, penalties, attorneys' fees and losses resulting from any claims, actions, suits, or proceedings based upon a release or threat of release of any hazardous substances, petroleum, pollutants, and contaminants which may have existed on, or which relate to, the Permanent Easement Area or the Landowner's Property prior to the date hereof.

Nothing contained herein shall be deemed a waiver by the City of any governmental immunity defenses, statutory or otherwise. Further, any and all claims brought by Landowner or its successors or assigns, shall be subject to any governmental immunity defenses of the City and the maximum liability limits provided by Minnesota Statute, Chapter 466.

The Landowner, for itself and its successors and assigns, does hereby warrant to and covenant with the City, its successors and assigns, that it is well seized in fee of the Landowner's Property described on Exhibit A, the Permanent Easement Area described on Exhibit B and depicted on Exhibit C and has good right to grant and convey the Permanent Easement herein to the City.

This Easement is binding upon the heirs, successors, executors, administrators and assigns of the parties hereto.

This Easement may be executed in any number of counterparts, each of which shall be deemed an original but all of which shall constitute one and the same instrument.

[Remainder of this page has been intentionally left blank]

IN TESTIMONY WHEREOF, the parties have caused this Easement to be executed as of the day and year first above written.

**CITY:**
**CITY OF COTTAGE GROVE**

By: _____
Myron Bailey
Mayor

By: _____
Tamara Anderson
City Clerk

STATE OF MINNESOTA )
) ss.
COUNTY OF WASHINGTON )

On this _____ day of _____, 2026, before me a Notary Public within and for said County, personally appeared Myron Bailey and Tamara Anderson to me personally known, who being each by me duly sworn, each did say that they are respectively the Mayor and the City Clerk of the City of Cottage Grove, the Minnesota municipal corporation named in the foregoing instrument, and that it was signed on behalf of said municipal corporation by authority of its City Council and said Mayor and City Clerk acknowledged said instrument to be the free act and deed of said municipal corporation.

_____
Notary Public

**LANDOWNER:**
**DCJ COTTAGE GROVE, LLC**

By: _____
Douglas Compton
Its: Manager

STATE OF ~~OHIO~~ West Virginia )
) ss.
COUNTY OF Greenbrier )

The foregoing instrument was acknowledged before me on this 25th day of February, 2026, by Douglas Compton, the Manager of DCJ Cottage Grove, LLC, an Ohio Limited Liability Company, on behalf of said company.

OFFICIAL SEAL
NOTARY PUBLIC
STATE OF WEST VIRGINIA
RUTHIE A. ALLEN
200 Jackson Street
Alderson, WV 24910
My Commission Expires Feb. 20, 2027

Ruthie A. Allen
Notary Public

**This instrument drafted by**
**And after recording, please return to:**
Korine Land, #262432
LeVander, Gillen, & Miller, P.A.
1305 Corporate Center Dr., Suite 300
Eagan, MN 55121
(651) 451-1831

**EXHIBIT A**
**LEGAL DESCRIPTION OF PERMANENT EASEMENT AREA**

A sidewalk easement over and across that part of the westerly eighty (80) feet of the Southwesterly Two Hundred Fifty (250) feet of Lot Twelve (12) and the Southwesterly Two Hundred Fifty (250) feet of Lot Thirteen (13), located in Block Three (3) of ST. PAUL PARK ACRE LOTS, JERRARD'S PLAT, according to the plat thereof on file and of record in the office of the registrar of titles, in and for Washington County, Minnesota described as beginning at a point on the southwesterly line of said Lot 12 a distance of 73.00 feet southeasterly from the most westerly corner of said Lot 12; thence on an assumed bearing of South 45 degrees 46 minutes 01 second East along said southwesterly line of Lot 12 a distance of 7.00 feet to the easterly line of said westerly 80.00 feet of Lot 12; thence North 44 degrees 05 minutes 14 seconds East along said easterly line of the westerly 80.00 feet of Lot 12 a distance of 22.09 feet; thence North 45 degrees 54 minutes 46 seconds West 1.50 feet; thence South 44 degrees 05 minutes 14 seconds West 14.24 feet; thence South 79 degrees 11 minutes 30 seconds West 9.56 to said southwesterly line of Lot 12 and the point of beginning.

# EXHIBIT B
# DEPICTION OF PERMANENT EASEMENT AREA

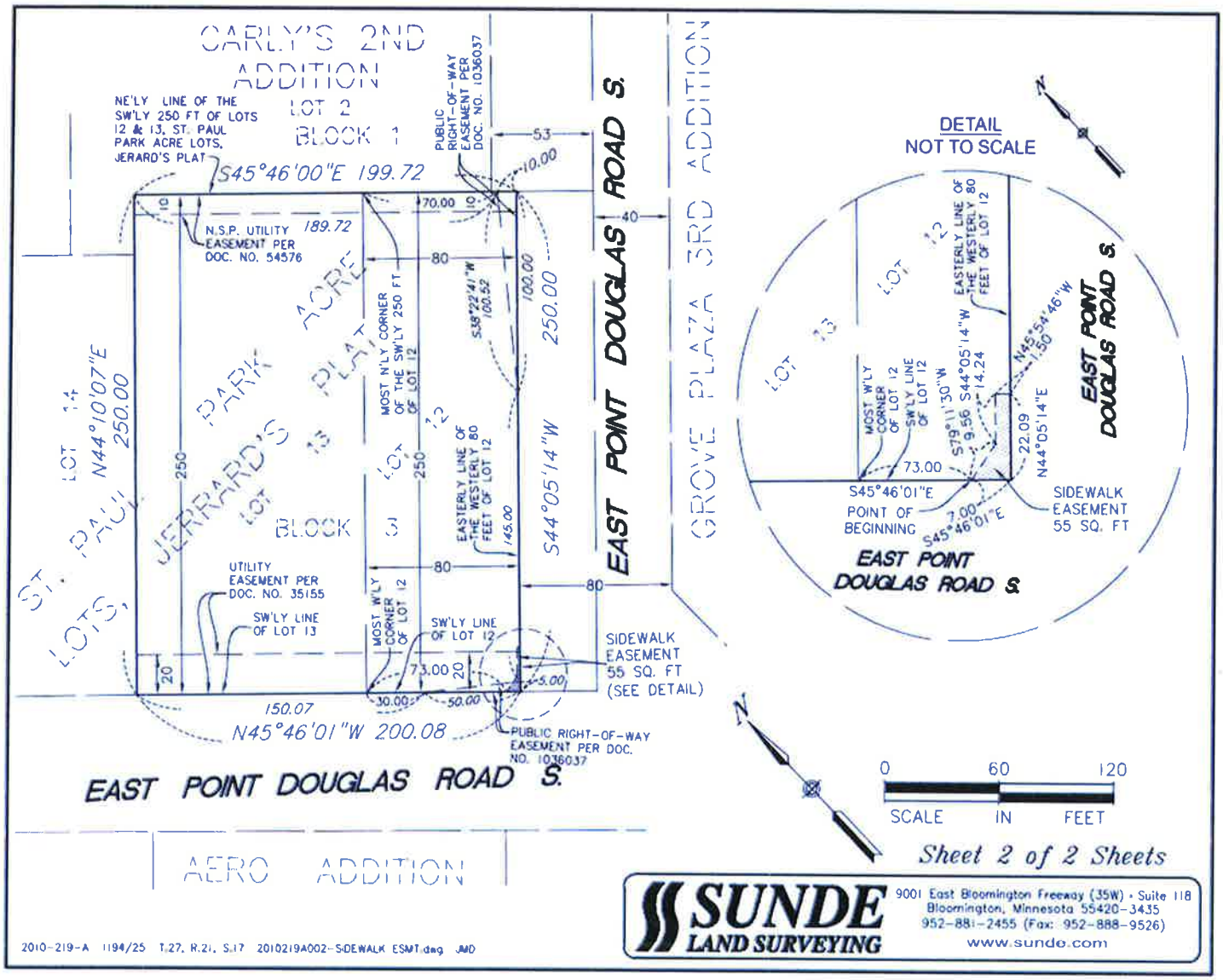

**ENCROACHMENT AGREEMENT RELATING TO LANDOWNER IMPROVEMENTS ON A PORTION OF EAST POINT DOUGLAS ROAD SOUTH RIGHT OF WAY**

**THIS ENCROACHMENT AGREEMENT** ("Agreement") is made, entered into and effective this _____ day of _____, 2026, by and between the City of Cottage Grove, a Minnesota municipal corporation ("City"), and DCJ Cottage Grove, LLC, an Ohio limited liability company ("Landowner"). Subject to the terms and conditions hereafter stated and based on the representations, warranties, covenants, agreements and recitals of the parties herein contained, the parties do hereby agree as follows:

## ARTICLE 1
## DEFINITIONS

**1.1. Terms.** The following terms, unless elsewhere specifically defined herein, shall have the following meanings as set forth below.

**1.2. City.** "City" means the City of Cottage Grove, a Minnesota municipal corporation.

**1.3. City Property.** "City Property" means the right-of-way dedicated as East Point Douglas Road South, located in the City of Cottage Grove, Washington County, Minnesota.

**1.4. Construction Plan.** "Construction Plan" means all of the plans, drawings specifications and surveys on file with the City, as amended and approved by the City Engineer, relating to Landowner Improvements, which are hereby incorporated by reference and made a part of this Agreement.

**1.5. Encroachment Area.** "Encroachment Area" means the portion of City Property for Landowner Improvements, legally described on Exhibit A and depicted on Exhibit B, attached hereto and incorporated herein, to be used by Landowner for Landowner Improvements.

**1.6. Landowner.** "Landowner" means DCJ Cottage Grove, LLC, an Ohio limited liability company.

**1.7. Landowner Improvements.** "Landowner Improvements" means Landowner's sidewalk related improvements which will be located in the Encroachment Area on City Property, legally described on Exhibit A and depicted on Exhibit B and as detailed on the Construction Plan.

**1.8. Landowner Property.** "Landowner Property" means the real property located in the City of Cottage Grove, Washington County, Minnesota legally described as follows:

> The Westerly Eighty (80) feet of the Southwesterly Two Hundred Fifty (250) feet of Lot Twelve (12) and the Southwesterly Two Hundred Fifty (250) feet of Lot Thirteen (13), located in Block Three (3) of ST. PAUL PARK ACRE LOTS, JERRARD'S PLAT, according to the

plat thereof on file and of record in the Office of the Registrar of Titles, in and for Washington County, Minnesota.

PID: 17.027.21.22.0018
*Torrens Property Certificate 67578*

**1.9. Maintain.** As used in this Agreement with respect to the Landowner Improvements, "Maintain" and derivations thereof means to upkeep and repair in accordance with relevant City ordinances and regulations applicable to such improvements.

## ARTICLE 2
## RECITALS

**2.1.** Landowner owns Landowner Property.

**2.2.** Landowner Property will require encroachment on City Property for Landowner Improvements so that the Landowner Property can have reasonable to access existing City sidewalks.

**2.3.** Subject to the terms of this Agreement, the City is willing to allow the Landowner Improvements to be placed within the Encroachment Area, on the condition the Landowner maintains Landowner Improvements.

## ARTICLE 3
## AGREEMENTS

**3.1. Construction And Maintenance Of Landowner Improvements.** Under the terms and conditions stated herein, Landowner, at its own cost, is hereby authorized by the City to make the Landowner Improvements in the Encroachment Area. The Landowner Improvements shall only be placed at the locations specified in the Construction Plan. The Landowner Improvements must be constructed according to the Construction Plan.

Landowner shall not place any other structures, retaining walls, irrigation systems, buildings, fences, landscaping, trees or shrubs in the Encroachment Area, except for the Landowner Improvements, without the City's written consent.

After construction, Landowner, at its own expense, shall maintain and repair the Landowner Improvements.

**3.2. City Not Responsible For Landowner Improvements.** Nothing contained herein shall be deemed an assumption by the City of any responsibility for construction, maintenance, replacement or repair of the Landowner Improvements.

**3.3. Continuing Right To Encroachment Area.** Nothing contained herein shall be deemed a waiver or abandonment or transfer of the right, title and interest that the City holds to the Encroachment Area.

**3.4. Subordinate Position Of Landowner Improvements.** The Landowner Improvements are subordinate to the rights of the City in the Encroachment Area.

**3.5. Risk Of Loss.** Landowner understands and agrees that the Landowner Improvements within the Encroachment Area may be adversely affected by damage caused to Landowner Improvements arising out of the City's use of the Encroachment Area. The parties agree that the City is not responsible for such events; the City shall have no liability to Landowner for such events. Landowner assumes the risk of installing the Landowner Improvements in the Encroachment Area.

**3.6. Landowner To Bear Cost Of Relocating Landowner Improvements.** The City is responsible for the repair and maintenance of the City Property in the Encroachment Area.

The City may require the Landowner at the expense of the Landowner to temporarily remove and subsequently replace the Landowner Improvements in the City Property in order for the City to gain access to the City Property for the purpose of inspecting, repairing, maintaining, or replacing any improvements or adding future City improvements in the Encroachment Area.

If the Landowner does not perform such tasks, the City may perform such tasks and in such case the Landowner shall reimburse the City for the City's costs and expenses. Prior to commencing such tasks, the City shall send a notice to the Landowner and allow the Landowner twenty (20) days from the date of the written notice to perform the tasks. If the Landowner has not completed the work within the twenty (20) days, then the City may proceed to perform the tasks. Once the City's costs and expenses have been determined by the City, the City shall send an invoice for such costs and expenses to the Landowner. The Landowner must pay the invoice within thirty (30) days after the date of the invoice. Such costs and expenses include, but are not limited to, costs charged the City by third parties such as contractors as well as the costs for City personnel that may have performed the work. Bills not paid shall incur the standard penalty and interest established by the City for utility billings within the City.

**3.7. Emergency.** The City shall not be required to give such notice if the City's engineer determines that an emergency exists. In such instance, the City, without giving notice to Landowner may perform the work and in such case the Landowner shall reimburse the City for the costs and expenses relating to the work. Once the City's costs and expenses have been determined by the City, the City shall send an invoice for such costs and expenses to the Landowner. The Landowner must pay the invoice within thirty (30) days after the date of the invoice. Such costs and expenses include, but are not limited to, costs charged to the City by third parties such as contractors as well as the costs for City personnel that may have performed the work. Bills not paid shall incur the standard penalty and interest established by the City for utility bills within the City.

**3.8. Remedies.** If the Landowner fails to perform its obligations under this Agreement, then the City may avail itself of any remedy afforded by law or in equity and any of the following non-exclusive remedies:

(a) The City may specifically enforce this Agreement.

(b) If Landowner fails to make payments under Section 3.6 or 3.7, then the City may certify to Washington County the amounts due as payable with the real estate taxes for Landowner Property in the next calendar year; such certifications may be made under Minnesota Statutes, Chapter 444 in a manner similar to certifications for unpaid utility bills. The Landowner waives any and all procedural and substantive objections to the imposition of such usual and customary charges on the Landowner Property.

Further, as an alternate means of collection, if the written billing is not paid by the Landowner, the City, without notice and without hearing, may specially assess the Landowner Property for the costs and expenses incurred by the City. The Landowner hereby waives any and all procedural and substantive objections to special assessments for the costs including, but not limited to, notice and hearing requirements and any claims that the charges or special assessments exceed the benefit to the Landowner Property. The Landowner waives any appeal rights otherwise available pursuant to Minnesota Statute §429.081. The Landowner acknowledges that the benefit from the performance of tasks by the City equals or exceeds the amount of the charges and assessments for the costs that are being imposed hereunder upon the Landowner Property.

No remedy herein conferred upon or reserved to the City shall be exclusive of any other available remedy or remedies, but each and every such remedy shall be cumulative and shall be in addition to every other remedy given under this Agreement or now or hereafter existing at law or in equity or by statute. No delay or omission to exercise any right or power accruing upon any default shall impair any such right or power or shall be construed to be a waiver thereof, but any such right and power may be exercised from time to time and as often as may be deemed expedient.

**3.9. Indemnification.** With the exception of events arising from negligence or willful misconduct by the City, its officer, agents, employees and volunteers, the Landowner shall indemnify, defend and hold the City, its council, agents, consultants, attorneys, employees and representatives harmless against and in respect of any and all claims, demands, actions, suits, proceedings, losses, costs, expenses, obligations, liabilities, damages, recoveries, and deficiencies including interest, penalties and attorneys' fees, that the City incurs or suffers, which arise out of, result from or relate to any of the following:

(a) The Landowner Improvements;

(b) Installation and maintenance of the Landowner Improvements;

(c) Failure by the Landowner to observe or perform any covenant, condition, obligation or agreement on their part to be observed or performed under this Agreement; and

(d) Use of the Encroachment Area for Landowner Improvements.

**3.10. Limitation on Liability.** Minnesota Tort Claims Act, Minnesota Statutes, Chapter 466, governs the Parties' liability. Nothing in this Agreement is intended to waive or limit the provisions of the Tort Claims Act. The total liability of all third-party claims arising out of a single occurrence shall not exceed the limit set forth for each Party. The limits of liability for the undersigned Parties may not be added together to determine the maximum amount of liability for any one party. The intent of this paragraph is to impose on each party a limited duty to defend and indemnify each other subject to the limits of liability under Minnesota Statutes, Chapter 466.

**3.11. City Duties.** Nothing contained in this Agreement shall be considered an affirmative duty upon the City to perform the Landowner's obligations contained in Article 3 if the Landowner does not perform such obligations.

**3.12. No Third Party Recourse.** Third parties shall have no recourse against the City under this Agreement.

**3.13. Recording.** This Agreement shall be recorded with the Washington County Recorder against both the Landowner Property and the Encroachment Area.

**3.14. Binding Agreement.** The parties mutually recognize and agree that all terms and conditions of this recordable Agreement shall run with the Landowner Property and City Property and shall be binding upon the heirs, successors, administrators and assigns of the parties, for so long as the Landowner Improvements remain on the City Property.

**3.15. Amendment And Waiver.** The parties hereto may by mutual written agreement amend this Agreement in any respect. Any party hereto may extend the time for the performance of any of the obligations of another, waive any inaccuracies in representations by another contained in this Agreement or in any document delivered pursuant hereto which inaccuracies would otherwise constitute a breach of this Agreement, waive compliance by another with any of the covenants contained in this Agreement and performance of any obligations by the other or waive the fulfillment of any condition that is precedent to the performance by the party so waiving of any of its obligations under this Agreement. Any agreement on the part of any party for any such amendment, extension or waiver must be in writing. No waiver of any of the provisions of this Agreement shall be deemed, or shall constitute, a waiver of any other provisions, whether or not similar, nor shall any waiver constitute a continuing waiver.

**3.16. Governing Law.** This Agreement shall be governed by and construed in accord with the laws of the State of Minnesota.

**3.17. Counterparts.** This Agreement may be executed in any number of counterparts, each of which shall be deemed an original, but all of which shall constitute one and the same instrument.

**3.18. Headings.** The subject headings of the sections this Agreement are included for purposes of convenience only and shall not affect the construction of interpretation of any of its provisions.

**3.19. Notice.** Notice shall mean notices given by one party to the other if in writing and if and when delivered or tendered: (i) in person; (ii) by depositing it in the United States mail in a sealed envelope, by certified mail, return receipt requested, with postage and postal charges prepaid, or (iii) by proper and timely delivery to an overnight courier service addressed by name and address to the party or person intended addressed as follows:

| | |
|---|---|
| If to City: | City of Cottage Grove<br>Attention: City Administrator<br>12800 Ravine Parkway South<br>Cottage Grove, MN 55016 |
| If to Landowner: | DCJ Cottage Grove, LLC<br>Doug Compton<br>3805 Edwards Rd. Suite 390<br>Cincinnati, OH 45209 |

or to such other address as the party addressed shall have previously designated by notice given in accordance with this Section. Notices shall be deemed to have been duly given on the date of service if served personally on the party to whom notice is to be given, on the third day after mailing if mailed by United States postal service as provided above, or within twenty-four (24) hours if sent via overnight courier service provided, that a notice not given as above shall, if it is in writing, be deemed given if and when actually received by a party.

**[The remainder of this page has been intentionally left blank.]**

**IN WITNESS WHEREOF**, the parties have executed this Agreement the year and day first set forth above.

**CITY:**
**CITY OF COTTAGE GROVE**

By:_____
Myron Bailey
Its Mayor

By:_____
Tammy Anderson
Its City Clerk

STATE OF MINNESOTA )
) ss.
COUNTY OF WASHINGTON )

On this _____ day of_____, 2025, before me a Notary Public within and for said County, personally appeared Myron Bailey and Tammy Anderson to me personally known, who being each by me duly sworn, each did say that they are respectively the Mayor and City Clerk of the City of Cottage Grove, the municipality named in the foregoing instrument, and that the said instrument was signed on behalf of said municipality by authority of its City Council and said Mayor and City Clerk acknowledged said instrument to be the free act and deed of said municipality.

_____
Notary Public

**LANDOWNER:**
**DCJ COTTAGE GROVE, LLC**

By: _____

Its: Manager

STATE OF ~~OHIO~~ West Virginia )
) ss.
COUNTY OF Greenbrier )

On this 25th day of February, 2026, before me a Notary Public within and for said County, personally appeared Doug Compton the manager of DCJ Cottage Grove, LLC, the Ohio limited liability company named in the foregoing instrument, and that the said instrument was signed on behalf of said company by authority of its Board and said manager acknowledged said instrument to be the free act and deed of said company.

Ruthie A. Allen
Notary Public

OFFICIAL SEAL
NOTARY PUBLIC
STATE OF WEST VIRGINIA
RUTHIE A. ALLEN
200 Jackson Street
Alderson, WV 24910
My Commission Expires Feb. 20, 2027

**THIS INSTRUMENT DRAFTED BY AND**
**AFTER RECORDING PLEASE RETURN TO:**

Korine Land, #262432
LeVander, Gillen, & Miller, P.A.
1305 Corporate Center Drive Suite 300
Eagan, MN 55121
(651) 451-1831

**EXHIBIT A**
**LEGAL DESCRIPTION OF PERMANENT EASEMENT AREA**

An encroachment easement over and across that part of Lot 12, Block 3 of ST. PAUL PARK ACRE LOTS, JERRARD'S PLAT, lying easterly of the westerly 80.00 feet thereof, according to the plat thereof on file and of record in the office of the registrar of titles, in and for Washington County, Minnesota, described as beginning at a point on the easterly line of said westerly 80.00 feet of Lot 12 a distance of 87.35 feet northeasterly from the most southerly corner of said westerly 80.00 feet of Lot 12; thence on an assumed bearing of North 44 degrees 05 minutes 14 seconds East along said easterly line of the westerly 80.00 feet of Lot 12 a distance of 8.00 feet; thence South 45 degrees 54 minutes 46 seconds East 5.35 feet; thence South 44 degrees 05 minutes 14 seconds West 8.00 feet; thence North 45 degrees 54 minutes 46 seconds West 5.35 feet to said easterly line of the westerly 80.00 feet of Lot 12 and the point of beginning.

# EXHIBIT B
# DEPICTION OF LANDOWNER IMPROVEMENTS

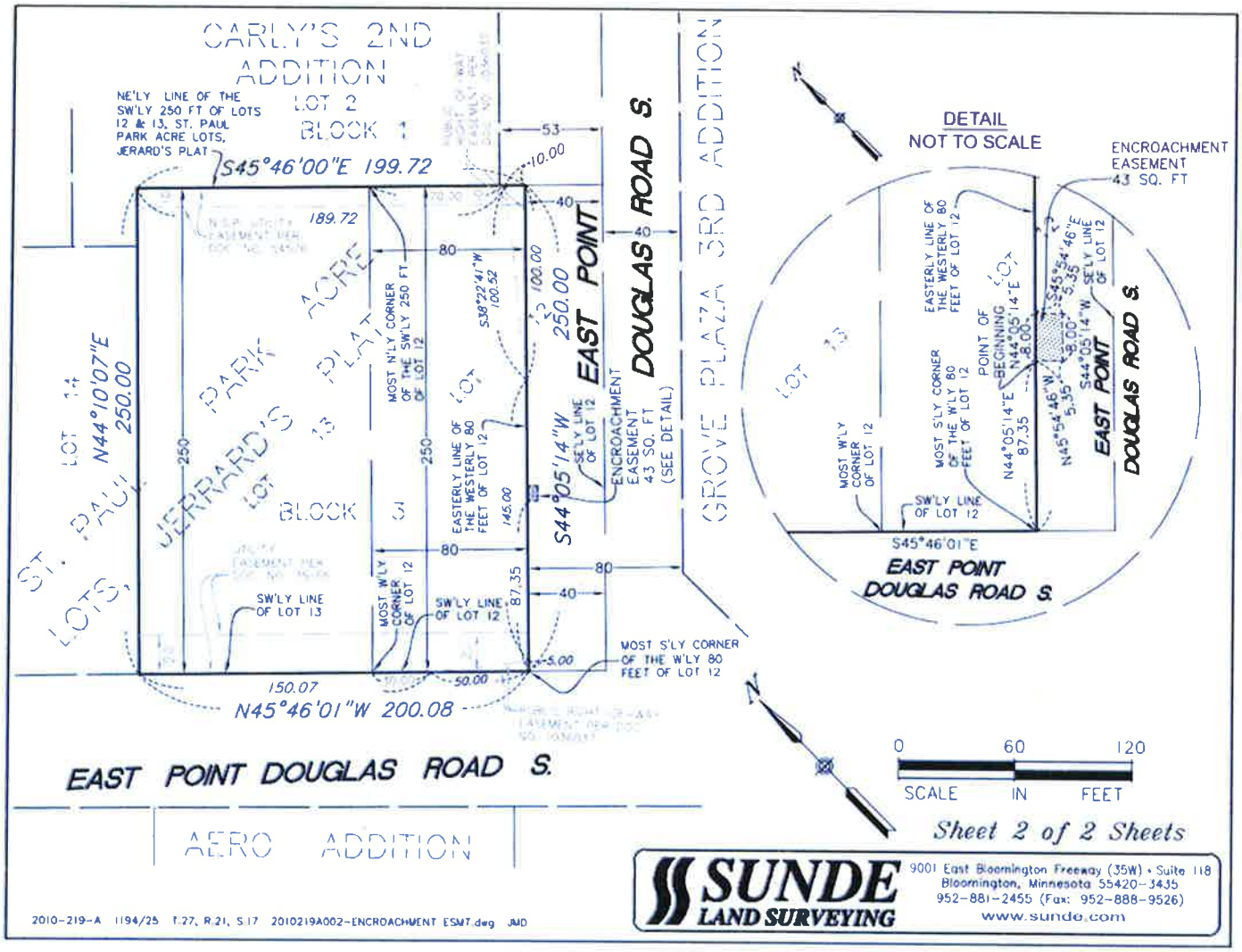

*(Reserved for Recording Data)*

# STORMWATER MANAGEMENT FACILITIES AGREEMENT

This Stormwater Management Facilities Agreement ("Agreement") is made, entered into and effective this ____ day of _____, 2026, by and between the City of Cottage Grove, a Minnesota municipal corporation ("City"), and DCJ Cottage Grove, LLC, an Ohio Limited Liability Company ("Landowner").

**WHEREAS**, Landowner is the fee owner of certain real property situated in the City of Cottage Grove, County of Washington, State of Minnesota legally described as follows:

The Westerly 80 feet of the Southwesterly 250 feet of Lot 12 and the Southwesterly 250 feet of Lot 13, located in Block 3 of St. Paul Park Acre Lots, Jerrard's Plat, Washington County, Minnesota

Torrens Property Certificate: 67578
PID: 17.027.21.22.0018

(the "Property"); and

**WHEREAS**, Landowner has obtained the approval of the City for the development of the Property for Stormwater Management Facilities; and

**WHEREAS**, as used herein, the term "Stormwater Management Facilities" may refer to water quality and/or water quantity facilities (i.e. detention basins, retention basins, swales, pipes, oil/water separators, sand filtering devices, infiltration facilities, sump structures, etc.) which are located outside the public road right-of-way; and

**WHEREAS**, the City has required that the Landowner make provision for the construction, maintenance and repair of the Stormwater Management Facilities located within the boundaries of the Property pursuant the constructions plans approved by the City Engineer and on file with the City ("Plans"); and

**WHEREAS**, the City and Landowner desire to set forth their understanding with respect to the construction, repair and maintenance of the Stormwater Management Facilities and the responsibility relating to the costs of the repair and maintenance of the Stormwater Management Facilities.

**NOW THEREFORE**, in consideration of the foregoing facts and circumstances, and for other good and valuable consideration, the receipt and sufficiency of which is hereby acknowledged, the parties hereto hereby agree as follows:

1. Construction and Maintenance of Stormwater Management Facilities. The Landowner agrees to construct the Stormwater Management Facilities according to the Plans and repair and maintain the Stormwater Management Facilities at its sole cost and expense.

Maintenance of the Stormwater Management Facilities shall mean (i) monthly inspections and, if necessary, removal of all litter, debris, sediment, and replacement of mulch, vegetation, and eroded areas to ensure establishment of healthy functioning plant life therein; and (ii) an annual inspection, and certification, by a qualified individual or company acceptable to the City that the Stormwater Management Facilities are functioning in accordance with the approved Plans and have maintained the proper operation of the stormwater treatment as Stormwater Management Facilities according to the City Standards. If, as a result of an inspection by a qualified individual or company acceptable to the City or City staff, it is determined that the Stormwater Management Facilities (1) have not been maintained; or (2) are not functioning as originally designed and intended; or (3) are in need of repair, the Landowner agrees to restore the Stormwater Management Facilities so that it functions as it was designed and intended. The Landowner further agrees that they will not use any of the Stormwater Management Facilities for snow storage and will inform its snow removal contractors of this provision of the Agreement.

Subject to Section 5 below, Landowner shall be solely responsible for the repair and maintenance of the Stormwater Management Facilities and shall provide a copy of the required annual inspection report to the City. If the required annual inspection report is not submitted to the City by September 30th of each year, the Landowner shall provide the City with the right to enter onto the property to conduct the annual inspection.

2. Landowner's Default. In the event of default by the Landowner as to any of the work to be performed by it hereunder, following at least thirty (30) days prior written notice and Landowner's failure to cure such default within such time-frame, except in an emergency as determined by the City, the City may, at its option, perform the work and the Landowner shall promptly, following receipt of an invoice and reasonable substantiation of such costs, reimburse the City for any reasonable out-of-pocket expense incurred by the City. This Agreement is a license for the City to act when so authorized under this Agreement, and it shall not be necessary for the City to seek a Court order for permission to enter the Property. When the City does any such work, the City may, in addition to its other remedies, assess the reasonable out-of-pocket cost in whole or in part.

3. Future City Policy. Notwithstanding anything contained in this Agreement to the contrary, in the event the City shall in the future establish a policy for repair and maintenance by the City of stormwater ponds owned by private parties located elsewhere in the City under which policy the costs of such repair and maintenance are to be paid either out of general City revenues or by collection of utility or service fees or charges, then any owner of any portion of the Property shall be entitled to petition the City for the inclusion of any infiltration basin under such repair and maintenance program. The recording of a certified copy of the Resolution of the City Council of the City which sets forth the consent and authorization described in the foregoing sentence shall serve to terminate this Agreement, without further action on the part of any party hereto.

4. Changes to Site Configuration or Stormwater Management Facilities. If site configurations or Stormwater Management Facilities change, causing decreased effectiveness of Stormwater Management Facilities, new or improved Stormwater Management Facilities must be implemented to ensure the conditions for post-construction stormwater management continue to be met.

5. Terms and Conditions. This Agreement shall run with the land and shall be binding upon Landowner's successors and assigns with respect to the Property. The terms and conditions of this Agreement shall be binding upon and shall insure to the benefit of the parties hereto and their respective successors and assigns.

6. Landowner Warranty. Landowner warrants and represents the following to the City and acknowledges that this Agreement has been duly executed and delivered and constitutes the legal, valid and binding obligation of Landowner enforceable in accordance with its terms. The party signing on behalf of the Landowner has been duly authorized by the entity to sign the Agreement and bind the entity. Landowner has been duly formed under the laws of the State of Minnesota and is in good standing under the laws of the jurisdiction in which the Property is located, is duly qualified to transact business in the jurisdiction in which the Property is located, and has the requisite power and authority to enter into and perform this Agreement and the documents and instruments required to be executed and delivered by Landowner pursuant hereto. This Agreement and the documents and instruments required to be executed and delivered by Landowner pursuant hereto have each been duly authorized by all necessary action on the part of Landowner and such execution, delivery and performance does and will not conflict with or result in a violation of Landowner's organizational agreement or any judgment or order. The execution, delivery and performance by Landowner of this Agreement will not (a) violate any provision of any law, statute, rule or regulation or any order, writ, judgment, injunction, decree, determination or award of any court, governmental agency or arbitrator presently in effect having applicability to Landowner, or (b) result in a breach of or constitute a default under any indenture, loan or credit agreement or any other agreement, lease or instrument to which Landowner is a party or by which it or any of its properties may be bound.

7. Amendment and Waiver. The parties hereto may by mutual written agreement amend this Agreement in any respect. Any party hereto may extend the time for the performance of any of the obligations of another, waive any inaccuracies in representations by another contained in this Agreement or in any document delivered pursuant hereto which inaccuracies would otherwise constitute a breach of this Agreement, waive compliance by another with any of the covenants contained in this Agreement, waive performance of any obligations by the other or waive the fulfillment of any condition that is precedent to the performance by the party so waiving of any of its obligations under this Agreement. Any agreement on the part of any party for any such amendment, extension or waiver must be in writing. No waiver of any of the provisions of this Agreement shall be deemed, or shall constitute, a waiver of any other provisions, whether or not similar, nor shall any waiver constitute a continuing waiver.

8. Governing Law. This Agreement shall be governed by and construed in accordance with the laws of the State of Minnesota.

9. Counterparts. This Agreement may be executed in any number of counterparts, each of which shall be deemed an original but all of which shall constitute one and the same instrument.

10. Consent. Landowner consents to the recording of this Agreement.

11. Limitation of Liability. Notwithstanding any other provision of this Agreement, in no event shall either party or any of their affiliates, by reason of any of their respective acts or omissions be liable whether in contract, tort, misrepresentation, warranty, negligence, strict liability or otherwise for any special, indirect, incidental or consequential damages arising out of or in connection with this Agreement, or the performance, non-performance or breach thereof.

12. Notice. Notice shall mean notices given by one party to the other if in writing and if and when delivered or tendered: (i) in person; (ii) by depositing it in the United States mail in a sealed envelope, by certified mail, return receipt requested, with postage and postal charges prepaid, or (iii) by proper and timely delivery to an overnight courier service addressed by name and address to the party or person intended addressed as follows:

| | |
|---|---|
| If to City: | City of Cottage Grove<br>Attention: City Administrator<br>12800 Ravine Parkway South<br>Cottage Grove, MN 55016 |
| If to Landowner: | DCJ Cottage Grove, LLC<br>Doug Compton<br>3805 Edwards Rd. Suite 390<br>Cincinnati, OH 45209 |

or to such other address as the party addressed shall have previously designated by notice given in accordance with this Section. Notices shall be deemed to have been duly given on the date of service if served personally on the party to whom notice is to be given, on the third day after mailing if mailed by United States postal service as provided above, or within twenty-four (24) hours if sent via overnight courier service provided, that a notice not given as above shall, if it is in writing, be deemed given if and when actually received by a party.

**[The remainder of this page was intentionally left blank.]**

**IN WITNESS WHEREOF**, the parties hereto have caused this document to be executed as of the day and year first above written.

**CITY:**
**CITY OF COTTAGE GROVE**

By:_____
Myron Bailey
Its Mayor

By:_____
Tamara Anderson
Its City Clerk

STATE OF MINNESOTA )
) ss.
COUNTY OF WASHINGTON )

On this _____ day of _____, 2026, before me a Notary Public within and for said County, personally appeared Myron Bailey and Tamara Anderson to me personally known, who being each by me duly sworn, each did say that they are respectively the Mayor and City Clerk of the City of Cottage Grove, the municipality named in the foregoing instrument, and that the said instrument was signed in behalf of said municipality by authority of its City Council and said Mayor and City Clerk acknowledged said instrument to be the free act and deed of said municipality.

_____
Notary Public

**LANDOWNER:**
**DCJ COTTAGE GROVE, LLC**

By: _____
Douglas Compton
Its: Manager

STATE OF ~~OHIO~~ West Virginia )
) ss.
COUNTY OF Greenbrier )

The foregoing instrument was acknowledged before me on this 25th day of February, 2026, by Douglas Compton, the Manager of DCJ Cottage Grove, LLC, an Ohio Limited Liability Company, on behalf of said company.

_____
Notary Public

OFFICIAL SEAL
NOTARY PUBLIC
STATE OF WEST VIRGINIA
RUTHIE A. ALLEN
200 Jackson Street
Alderson, WV 24910
My Commission Expires Feb 20, 2027

**This instrument drafted by**
**And after recording, please return to:**
Korine L. Land (#262432)
LeVander, Gillen & Miller, P.A.
1305 Corporate Center Drive, Suite 300
Eagan, MN 55121

# SITE DEVELOPMENT PLANS
# FOR
# PANERA - COTTAGE GROVE

## 7162 E POINT DOUGLAS RD S, SECTION 17, TOWNSHIP 27 NORTH, RANGE 21 WEST
## COTTAGE GROVE, WASHINGTON COUNTY, MN

**PROJECT TEAM:**


ENGINEER
KIMLEY-HORN AND ASSOCIATES, INC.

PREPARED BY: BRAIN M. WURDEMAN, P.E.
11995 SINGLETREE LN, SUITE 225
EDEN PRAIRIE, MN 55344
TELEPHONE: (612) 315-1272

LANDSCAPE ARCHITECT
767 EUSTIS STREET, SUITE 100
ST. PAUL, MN 55114
TELEPHONE: (651) 645-4197
CONTACT: RYAN HYLLESTED, P.L.A.

OWNER / DEVELOPER

CA COMMERCIAL
3805 EDWARDS RD, SUITE 390
CINCINNATI, OH 45209
TELEPHONE: (513) 757-1409
CONTACT: LEONARD CARLSON

SURVEYOR
SUNDE LAND SURVEYING
9001 EAST BLOOMINGTON FREEWAY
(35W), SUITE 118
BLOOMINGTON, MN 55420-3435
TELEPHONE: (952) 881-2455
CONTACT: LEONARD F. CARLSON, P.L.S.

**VICINITY**
**N.T.S.**

| Sheet List Table | |
|---|---|
| Sheet Number | Sheet Title |
| C000 | COVER SHEET |
| C100 | GENERAL NOTES |
| C200 | DEMO & EROSION AND SEDIMENT CONTROL PLAN |
| C301 | EROSION AND SEDIMENT CONTROL PHASE 2 PLAN |
| C302 | EROSION AND SEDIMENT CONTROL DETAILS |
| C400 | SITE DIMENSION PLAN |
| C401 | SITE DETAILS |
| C402 | SITE DETAILS |
| C500 | GRADING PLAN |
| C501 | STORM SEWER PLAN |
| C502 | GRADING DETAILS |
| C600 | UTILITY PLAN |
| C601 | UTILITY DETAILS |
| L100 | LANDSCAPE PLAN |
| L101 | LANDSCAPE DETAILS |
| P100 | PHOTOMETRIC PLAN |

**NOTES:**

1. CONTRACTOR SHALL CONFIRM THAT THE EXISTING CONDITIONS FOR THE SITE MATCH WHAT IS SHOWN ON THE DRAWINGS INCLUDED PRIOR TO CONSTRUCTION.
2. IF REPRODUCED, THE SCALES SHOWN ON THESE PLANS ARE BASED ON A ANSI full bleed D (34.00 x 22.00 Inches) SHEET.
3. ALL NECESSARY INSPECTIONS AND/OR CERTIFICATIONS REQUIRED BY CODES AND/OR UTILITY SERVICES COMPANIES SHALL BE PERFORMED PRIOR TO ANNOUNCED BUILDING POSSESSION AND THE FINAL CONNECTION OF SERVICES.
4. ALL GENERAL CONTRACTOR WORK TO BE COMPLETED (EARTHWORK, FINAL UTILITIES, AND FINAL GRADING) BY THE MILESTONE DATE IN PROJECT DOCUMENTS.

## BENCHMARKS

SITE BENCHMARKS:
(LOCATIONS SHOWN ON SURVEY)

SBM #1 - TOP OF NUT OF FIRE HYDRANT ON THE NORTHERLY SIDE OF EAST POINT DOUGLAS RD., ±33 FT NORTHWEST OF THE MOST WESTERLY PROPERTY CORNER OF THE SITE.
ELEVATION = 798.36 FT

SBM #2 - TOP OF THE SOUTHERLY MOST BOLT ON THE SPEEDWAY SIGN, ±83 FT NORTHEASTERLY OF THE MOST SOUTHERLY PROPERTY CORNER OF THE SITE.
ELEVATION = 801.35 FT

Know what's **below.** **Call** before you dig.

PRELIMINARY - NOT FOR CONSTRUCTION

| No. | REVISIONS | DATE | BY |
|---|---|---|---|


Kimley»Horn
© 2026 KIMLEY-HORN AND ASSOCIATES, INC.
11995 SINGLETREE LN, SUITE 225, EDEN PRAIRIE, MN 55344
PHONE: 612-315-1272
WWW.KIMLEY-HORN.COM


I HEREBY CERTIFY THAT THIS PLAN, SPECIFICATION OR REPORT WAS PREPARED BY ME OR UNDER MY DIRECT SUPERVISION AND THAT I AM A DULY LICENSED PROFESSIONAL ENGINEER UNDER THE LAWS OF THE STATE OF MINNESOTA.

BRIAN M. WURDEMAN, P.E.
DATE: 01/26/2026 LIC. NO. 53113 MN

| | |
|---|---|
| KHA PROJECT | 161369000 |
| DATE | 01/26/2026 |
| SCALE | AS SHOWN |
| DESIGNED BY | ARF |
| DRAWN BY | AKK |
| CHECKED BY | MTL |

**PANERA - COTTAGE GROVE**
PREPARED FOR
**CA COMMERCIAL**
COTTAGE GROVE MN

**COVER SHEET**

SHEET NUMBER
**C000**


K:\TCW_LDEV\ca commercial\cottage grove, mn\3 Design\CAD\plansheets\C0-COVER SHEET.dwg February 17, 2026 - 2:20pm

This document, together with the concepts and designs presented herein, as an instrument of service, is intended only for the specific purpose and client for which it was prepared. Reuse of and improper reliance on this document without written authorization and adaptation by Kimley-Horn and Associates, Inc. shall be without liability to Kimley-Horn and Associates, Inc.

K:\TCW_LDEV\ca commercial\cottage grove, mn\3 Design\CAD\plansheets\C1-GENERAL NOTES.dwg February 17, 2026 - 2:20pm

This document, together with the concepts and designs presented herein, as an instrument of service, is intended only for the specific purpose and client for which it was prepared. Reuse of and improper reliance on this document without written authorization and adaptation by Kimley-Horn and Associates, Inc. shall be without liability to Kimley-Horn and Associates, Inc.

## GENERAL CONSTRUCTION NOTES

1. THE CONTRACTOR AND SUBCONTRACTORS SHALL OBTAIN A COPY OF THE LATEST EDITION OF THE STANDARD SPECIFICATIONS OF THE LOCAL JURISDICTION AND STATE DEPARTMENT OF TRANSPORTATION AND BECOME FAMILIAR WITH THE CONTENTS PRIOR TO COMMENCING WORK. UNLESS OTHERWISE NOTED, ALL WORK SHALL CONFORM AS APPLICABLE TO THESE STANDARDS AND SPECIFICATIONS.
3. PERFORM ALL WORK IN COMPLIANCE WITH APPLICABLE CITY REGULATIONS, STATE CODES, AND O.S.H.A. STANDARDS. THE CONTRACTOR IS RESPONSIBLE FOR FURNISHING THE NECESSARY MATERIALS & LABOR TO CONSTRUCT THE FACILITY AS SHOWN AND DESCRIBED IN THE CONSTRUCTION DOCUMENTS, AND IN ACCORDANCE WITH THE SPECIFICATIONS AND REQUIREMENTS OF THE APPROPRIATE APPROVING AUTHORITIES.
4. CONTRACTOR SHALL CLEAR AND GRUB ALL AREAS UNLESS OTHERWISE INDICATED, REMOVING TREES, STUMPS, ROOTS, MUCK, EXISTING PAVEMENT AND ALL OTHER DELETERIOUS MATERIAL.
5. THE EXISTING SUBSURFACE UTILITY INFORMATION IN THIS PLAN IS QUALITY LEVEL "D" UNLESS OTHERWISE NOTED. THIS QUALITY LEVEL WAS DETERMINED ACCORDING TO THE GUIDELINES OF CI/ACSE 38/02, ENTITLED STANDARD GUIDELINES FOR THE COLLECTION AND DEPICTION OF SUBSURFACE QUALITY DATA BY THE FHA. EXISTING UTILITIES SHOWN ARE LOCATED ACCORDING TO THE INFORMATION AVAILABLE TO THE ENGINEER AT THE TIME OF THE TOPOGRAPHIC SURVEY AND HAVE NOT BEEN INDEPENDENTLY VERIFIED BY THE OWNER OR THE ENGINEER. GUARANTEE IS NOT MADE THAT ALL EXISTING UNDERGROUND UTILITIES ARE SHOWN OR THAT THE LOCATION OF THOSE SHOWN ARE ENTIRELY ACCURATE. FINDING THE ACTUAL LOCATION OF ANY EXISTING UTILITIES IS THE CONTRACTOR'S RESPONSIBILITY AND SHALL BE DONE BEFORE COMMENCING ANY WORK IN THE VICINITY. FURTHERMORE, THE CONTRACTOR SHALL BE FULLY RESPONSIBLE FOR ANY AND ALL DAMAGES DUE TO THE CONTRACTOR'S FAILURE TO EXACTLY LOCATE AND PRESERVE ANY AND ALL UNDERGROUND UTILITIES. THE OWNER OR ENGINEER WILL ASSUME NO LIABILITY FOR ANY DAMAGES SUSTAINED OR COST INCURRED BECAUSE OF THE OPERATIONS IN THE VICINITY OF EXISTING UTILITIES OR STRUCTURES, NOR FOR TEMPORARY BRACING AND SHORING OF SAME. IF IT IS NECESSARY TO SHORE, BRACE, SWING OR RELOCATE A UTILITY, THE UTILITY COMPANY OR DEPARTMENT AFFECTED SHALL BE CONTACTED AND THEIR PERMISSION OBTAINED REGARDING THE METHOD TO USE FOR SUCH WORK.
6. IT IS THE CONTRACTOR'S RESPONSIBILITY TO CONTACT THE VARIOUS UTILITY COMPANIES WHICH MAY HAVE BURIED OR AERIAL UTILITIES WITHIN OR NEAR THE CONSTRUCTION AREA BEFORE COMMENCING WORK. THE CONTRACTOR SHALL PROVIDE 48 HOURS MINIMUM NOTICE TO ALL UTILITY COMPANIES PRIOR TO BEGINNING CONSTRUCTION.
7. THE CONTRACTOR SHALL BE RESPONSIBLE FOR OBTAINING ALL REQUIRED CONSTRUCTION PERMITS AND BONDS IF REQUIRED PRIOR TO CONSTRUCTION.
8. THE CONTRACTOR SHALL HAVE AVAILABLE AT THE JOB SITE AT ALL TIMES ONE COPY OF THE CONSTRUCTION DOCUMENTS INCLUDING PLANS, SPECIFICATIONS, GEOTECHNICAL REPORT AND SPECIAL CONDITIONS AND COPIES OF ANY REQUIRED CONSTRUCTION PERMITS.
9. ANY DISCREPANCIES ON THE DRAWINGS SHALL BE IMMEDIATELY BROUGHT TO THE ATTENTION OF THE OWNER AND ENGINEER BEFORE COMMENCING WORK. NO FIELD CHANGES OR DEVIATIONS FROM DESIGN ARE TO BE MADE WITHOUT PRIOR APPROVAL OF THE OWNER AND NOTIFICATION TO THE ENGINEER.
10. ALL COPIES OF COMPACTION, CONCRETE AND OTHER REQUIRED TEST RESULTS ARE TO BE SENT TO THE OWNER DIRECTLY FROM THE TESTING AGENCY.
11. THE CONTRACTOR SHALL BE RESPONSIBLE FOR DOCUMENTING AND MAINTAINING AS-BUILT INFORMATION WHICH SHALL BE RECORDED AS CONSTRUCTION PROGRESSES OR AT THE COMPLETION OF APPROPRIATE CONSTRUCTION INTERVALS AND SHALL BE RESPONSIBLE FOR PROVIDING AS-BUILT DRAWINGS TO THE OWNER FOR THE PURPOSE OF CERTIFICATION TO JURISDICTIONAL AGENCIES AS REQUIRED. ALL AS-BUILT DATA SHALL BE COLLECTED BY A STATE PROFESSIONAL LAND SURVEYOR WHOSE SERVICES ARE ENGAGED BY THE CONTRACTOR.
12. ANY WELLS DISCOVERED ON SITE THAT WILL HAVE NO USE MUST BE PLUGGED BY A LICENSED WELL DRILLING CONTRACTOR IN A MANNER APPROVED BY ALL JURISDICTIONAL AGENCIES. CONTRACTOR SHALL BE RESPONSIBLE FOR OBTAINING ANY WELL ABANDONMENT PERMITS REQUIRED.
13. ANY WELL DISCOVERED DURING EARTH MOVING OR EXCAVATION SHALL BE REPORTED TO THE APPROPRIATE JURISDICTIONAL AGENCIES WITHIN 24 HOURS AFTER DISCOVERY IS MADE.
14. THE CONTRACTOR SHALL BE RESPONSIBLE FOR VERIFYING THAT THE PROPOSED IMPROVEMENTS SHOWN ON THE PLANS DO NOT CONFLICT WITH ANY KNOWN EXISTING OR OTHER PROPOSED IMPROVEMENTS. IF ANY CONFLICTS ARE DISCOVERED, THE CONTRACTOR SHALL NOTIFY THE OWNER PRIOR TO INSTALLATION OF ANY PORTION OF THE SITE WORK THAT WOULD BE AFFECTED. FAILURE TO NOTIFY OWNER OF AN IDENTIFIABLE CONFLICT PRIOR TO PROCEEDING WITH INSTALLATION RELIEVES OWNER OF ANY OBLIGATION TO PAY FOR A RELATED CHANGE ORDER.
15. SHOULD CONTRACTOR ENCOUNTER ANY DEBRIS LADEN SOIL, STRUCTURES NOT IDENTIFIED IN THE DOCUMENTS, OR OTHER SOURCE OF POTENTIAL CONTAMINATION, THEY SHALL IMMEDIATELY CONTACT THE ENGINEER AND OWNER.
16. CONTRACTOR SHALL NOTIFY OWNER AND/OR ENGINEER 48 HOURS IN ADVANCE OF THE FOLLOWING ACTIVITIES: PRE-CONSTRUCTION MEETING, SUBGRADE PREPARATION, BASE INSTALLATION, ASPHALT INSTALLATION, UNDERGROUND PIPING AND UTILITIES INSTALLATION, INSTALLATION OF STRUCTURES, CHECK VALVES, HYDRANTS, METERS, ETC., SIDEWALK INSTALLATION, CONNECTIONS TO WATER AND SEWER MAINS, TESTS OF UTILITIES.

## THIRD PARTY SUPPLEMENTAL INFORMATION

KIMLEY-HORN ASSUMES NO LIABILITY FOR ANY ERRORS, INACCURACIES, OR OMISSIONS CONTAINED WITHIN SUPPLEMENTAL INFORMATION PROVIDED BY THIRD PARTY CONSULTANTS.

1. **BOUNDARY & TOPOGRAPHIC SURVEY**
   PERFORMED BY: SUNDE LAND SURVEYING
   ADDRESS: 9001 EAST BLOOMINGTON FREEWAY (35W), SUITE 118 BLOOMINGTON, MN 55420-3435
   PHONE: 952-881-2455
   DATED: 12/09/2025
2. **GEOTECHNICAL EVALUATION REPORT**
   PERFORMED BY: PENDING
   ADDRESS: PENDING
   PHONE: PENDING
   DATED: PENDING
3. **CONSTRUCTION TESTING**
   TEST REPORTS REQUIRED FOR CLOSE OUT INCLUDE, BUT ARE NOT LIMITED TO:
   - DENSITY TEST REPORTS
   - BACTERIOLOGICAL TESTS OF WATER SYSTEM
   - PRESSURE TEST OF WATER/SEWER
   - LEAK TESTS ON SEWER SYSTEM AND GREASE TRAPS
   - ANY OTHER TESTING REQUIRED BY THE AGENCY/MUNICIPALITY

## EROSION CONTROL NOTES

1. THE STORM WATER POLLUTION PREVENTION PLAN ("SWPPP") IS COMPRISED OF THE EROSION CONTROL PLAN, THE STANDARD DETAILS, THE PLAN NARRATIVE, ATTACHMENTS INCLUDED IN THE SPECIFICATIONS OF THE SWPPP, PLUS THE PERMIT AND ALL SUBSEQUENT REPORTS AND RELATED DOCUMENTS.
2. ALL CONTRACTORS AND SUBCONTRACTORS INVOLVED WITH STORM WATER POLLUTION PREVENTION SHALL OBTAIN A COPY OF THE STORM WATER POLLUTION PREVENTION PLAN AND THE STATE NATIONAL POLLUTANT DISCHARGE ELIMINATION SYSTEM GENERAL PERMIT (NPDES PERMIT) AND BECOME FAMILIAR WITH THEIR CONTENTS.
3. BEST MANAGEMENT PRACTICES (BMP'S) AND CONTROLS SHALL CONFORM TO FEDERAL, STATE, OR LOCAL REQUIREMENTS OR MANUAL OF PRACTICE, AS APPLICABLE. THE CONTRACTOR SHALL IMPLEMENT ADDITIONAL CONTROLS AS DIRECTED BY THE PERMITTING AGENCY OR OWNER.
4. THE CONTRACTOR IS SOLELY RESPONSIBLE FOR COMPLYING WITH THE REQUIREMENTS OF THE AUTHORITIES HAVING JURISDICTION, AND SHALL MAINTAIN COMPLIANCE WITH APPLICABLE LAWS AND REGULATIONS FOR THE DURATION OF CONSTRUCTION.
5. THE CONTRACTOR SHALL FIELD ADJUST AND/OR PROVIDE ADDITIONAL EROSION CONTROL BMP'S AS NEEDED TO PREVENT EROSION AND OFF-SITE SEDIMENT DISCHARGE FROM THE CONSTRUCTION SITE. LOG AND RECORD ANY ADJUSTMENTS AND DEVIATIONS FROM THE APPROVED EROSION CONTROL PLANS WITHIN THE SWPPP DOCUMENTS STORED IN THE JOB SITE TRAILER.
6. BMPS SHOWN ON THE EROSION AND SEDIMENT CONTROL PLAN, AND IN THE STORM WATER POLLUTION PREVENTION PLAN, SHALL BE MAINTAINED IN FULLY FUNCTIONAL CONDITION AS REQUIRED BY ALL JURISDICTIONS UNTIL NO LONGER REQUIRED FOR A COMPLETED PHASE OF WORK OR FINAL STABILIZATION OF THE SITE. ALL EROSION AND SEDIMENTATION CONTROL MEASURES SHALL BE CHECKED BY A CERTIFIED PERSON AT LEAST ONCE EVERY 7 CALENDAR DAYS AND WITHIN 24 HOURS OF THE END OF A 0.5-INCH OR GREATER RAINFALL EVENT.
7. EROSION & SEDIMENT CONTROL BMPS SHALL BE MAINTAINED IN ACCORDANCE WITH THE FOLLOWING:
   - 7.1. INLET PROTECTION DEVICES AND BARRIERS SHALL BE REPAIRED OR REPLACED IF THEY SHOW SIGNS OF UNDERMINING OR DETERIORATION.
   - 7.2. ALL SEEDED AREAS SHALL BE CHECKED REGULARLY TO VERIFY THAT A HEALTHY STAND OF VEGETATION IS MAINTAINED. SEEDED AREAS SHOULD BE FERTILIZED, WATERED AND RE-SEEDED AS NEEDED. REFER TO THE LANDSCAPE PLAN AND PROJECT SPECIFICATIONS.
   - 7.3. SILT FENCES SHALL BE REPAIRED TO THEIR ORIGINAL CONDITIONS IF DAMAGED. SEDIMENT SHALL BE REMOVED FROM THE SILT FENCES WHEN IT REACHES ONE-THIRD THE HEIGHT OF THE SILT FENCE.
   - 7.4. THE ROCK CONSTRUCTION ENTRANCE(S) SHALL BE MAINTAINED IN A CONDITION WHICH WILL PREVENT TRACKING OR FLOW OF MUD ONTO PUBLIC RIGHTS-OF-WAY. THIS MAY REQUIRE PERIODIC ADDITIONS OF ROCK TOP DRESSING AS CONDITIONS DEMAND.
   - 7.5. THE TEMPORARY PARKING AND STORAGE AREA SHALL BE KEPT IN GOOD CONDITION (SUITABLE FOR PARKING AND STORAGE). THIS MAY REQUIRE PERIODIC ADDITIONS OF TOP DRESSING IF THE TEMPORARY PARKING CONDITIONS DEMAND.
   - 7.6. PERFORM ALL MAINTENANCE OPERATIONS IN A TIMELY MANNER BUT IN NO CASE LATER THAN 2 CALENDAR DAYS FOLLOWING THE INSPECTION.

## PAVING AND STRIPING NOTES

1. ALL PAVING, CONSTRUCTION, MATERIALS, AND WORKMANSHIP WITHIN JURISDICTION'S RIGHT-OF-WAY SHALL BE IN ACCORDANCE WITH THE LATEST EDITION OF THE LOCAL CITY OR COUNTY SPECIFICATIONS AND STANDARDS, OR THE STATE DOT SPECIFICATIONS AND STANDARDS IF NOT COVERED BY LOCAL CITY OR COUNTY REGULATIONS.
2. ALL SIGNS, PAVEMENT MARKINGS, AND OTHER TRAFFIC CONTROL DEVICES SHALL CONFORM TO MANUAL ON UNIFORM TRAFFIC CONTROL DEVICES (M.U.T.C.D) AND CITY STANDARDS.
3. CONTRACTOR SHALL FURNISH ALL PAVEMENT MARKINGS FOR FIRE LANES, ROADWAY LANES, PARKING STALLS, ACCESSIBLE PARKING SYMBOLS, ACCESS AISLES, STOP BARS AND SIGNS, AND MISCELLANEOUS STRIPING WITHIN THE PARKING LOT AS SHOWN ON THE PLANS.
4. ALL EXPANSION JOINTS SHALL EXTEND THROUGH THE CURB.
5. THE MINIMUM LENGTH OF OFFSET JOINTS AT RADIUS POINTS SHALL BE 2 FEET.
6. ALL JOINTS, INCLUDING EXPANSION JOINTS WITH REMOVABLE TACK STRIPS, SHALL BE SEALED WITH JOINT SEALANT.
7. THE MATERIALS AND PROPERTIES OF ALL CONCRETE SHALL MEET THE APPLICABLE REQUIREMENTS IN THE A.C.I. (AMERICAN CONCRETE INSTITUTE) MANUAL OF CONCRETE PRACTICE.
8. CONTRACTOR SHALL APPLY A SECOND COATING OVER ALL PAVEMENT MARKINGS PRIOR TO ACCEPTANCE BY OWNER FOLLOWED BY A COAT OF GLASS BEADS AS APPLICABLE PER THE PROJECT DOCUMENTS.
9. ANY EXISTING PAVEMENT, CURBS AND/OR SIDEWALKS DAMAGED OR REMOVED WILL BE REPAIRED BY THE CONTRACTOR AT HIS EXPENSE TO THE SATISFACTION OF THE ENGINEER AND OWNER.
10. BEFORE PLACING PAVEMENT, CONTRACTOR SHALL VERIFY SUITABLE ACCESSIBLE ROUTES (PER A.D.A). GRADING FOR ALL SIDEWALKS AND ACCESSIBLE ROUTES INCLUDING CROSSING DRIVEWAYS SHALL CONFORM TO CURRENT ADA STATE/NATIONAL STANDARDS. IN NO CASE SHALL ACCESSIBLE RAMP SLOPES EXCEED 1 VERTICAL TO 12 HORIZONTAL. IN NO CASE SHALL SIDEWALK CROSS SLOPES EXCEED 2% . IN NO CASE SHALL LONGITUDINAL SIDEWALK SLOPES EXCEED 5%. IN NO CASE SHALL ACCESSIBLE PARKING STALLS OR AISLES EXCEED 2% (1.5% TARGET) IN ALL DIRECTIONS. SIDEWALK ACCESS TO EXTERNAL BUILDING DOORS AND GATES SHALL BE ADA COMPLIANT. CONTRACTOR SHALL NOTIFY ENGINEER IMMEDIATELY IF ADA CRITERIA CANNOT BE MET IN ANY LOCATION PRIOR TO PAVING. NO CONTRACTOR CHANGE ORDERS WILL BE ACCEPTED FOR A.D.A COMPLIANCE ISSUES.
11. MAXIMUM JOINT SPACING IS TWICE THE DEPTH OF THE CONCRETE PAVEMENT IN FEET.

## GRADING AND DRAINAGE NOTES

1. GENERAL CONTRACTOR AND ALL SUBCONTRACTORS SHALL VERIFY THE SUITABILITY OF ALL EXISTING AND PROPOSED SITE CONDITIONS INCLUDING GRADES AND DIMENSIONS BEFORE START OF CONSTRUCTION. THE ENGINEER SHALL BE NOTIFIED IMMEDIATELY OF ANY DISCREPANCIES.
2. THE CONTRACTOR SHALL GRADE THE SITE TO THE ELEVATIONS INDICATED AND SHALL ADJUST BMP'S AS NECESSARY AND REGRADE WASHOUTS WHERE THEY OCCUR AFTER EVERY RAINFALL UNTIL A GRASS STAND IS WELL ESTABLISHED OR ADEQUATE STABILIZATION OCCURS.
3. CONTRACTOR SHALL ENSURE THERE IS POSITIVE DRAINAGE FROM THE PROPOSED BUILDINGS SO THAT SURFACE RUNOFF WILL DRAIN BY GRAVITY TO NEW OR EXISTING DRAINAGE OUTLETS. CONTRACTOR SHALL ENSURE NO PONDING OCCURS IN PAVED AREAS AND SHALL NOTIFY ENGINEER IF ANY GRADING DISCREPANCIES ARE FOUND IN THE EXISTING AND PROPOSED GRADES PRIOR TO PLACEMENT OF PAVEMENT OR UTILITIES.
4. CONTRACTOR SHALL PROTECT ALL MANHOLE COVERS, VALVE COVERS, VAULT LIDS, FIRE HYDRANTS, POWER POLES, GUY WIRES, AND TELEPHONE BOXES THAT ARE TO REMAIN IN PLACE AND UNDISTURBED DURING CONSTRUCTION. EXISTING CASTINGS AND STRUCTURES TO REMAIN SHALL BE ADJUSTED TO MATCH THE PROPOSED FINISHED GRADES.
5. BACKFILL FOR UTILITY LINES SHALL BE PLACED PER DETAILS, STANDARDS, AND SPECIFICATIONS SO THAT THE UTILITY WILL BE STABLE. WHERE UTILITY LINES CROSS THE PARKING LOT, THE TOP 6 INCHES SHALL BE COMPACTED SIMILARLY TO THE REMAINDER OF THE LOT. UTILITY DITCHES SHALL BE VISUALLY INSPECTED DURING THE EXCAVATION PROCESS TO ENSURE THAT UNDESIRABLE FILL IS NOT USED.
6. CONTRACTOR IS RESPONSIBLE FOR THE REMOVAL AND REPLACEMENT OF 4" OF TOPSOIL AT COMPLETION OF WORK. ALL UNPAVED AREAS IN EXISTING RIGHTS-OF-WAY DISTURBED BY CONSTRUCTION SHALL BE REGRADED AND SODDED.
7. AFTER PLACEMENT OF SUBGRADE AND PRIOR TO PLACEMENT OF PAVEMENT, CONTRACTOR SHALL TEST AND OBSERVE PAVEMENT AREAS FOR EVIDENCE OF PONDING. ALL AREAS SHALL ADEQUATELY DRAIN TOWARDS THE INTENDED STRUCTURE TO CONVEY STORM RUNOFF. CONTRACTOR SHALL IMMEDIATELY NOTIFY OWNER AND ENGINEER IF ANY DISCREPANCIES ARE DISCOVERED.
8. WHERE EXISTING PAVEMENT IS INDICATED TO BE REMOVED AND REPLACED, THE CONTRACTOR SHALL SAW CUT FULL DEPTH FOR A SMOOTH AND STRAIGHT JOINT AND REPLACE THE PAVEMENT WITH THE SAME TYPE AND DEPTH OF MATERIAL AS EXISTING OR AS INDICATED.
9. THE CONTRACTOR SHALL INSTALL PROTECTION OVER ALL DRAINAGE STRUCTURES FOR THE DURATION OF CONSTRUCTION AND UNTIL ACCEPTANCE OF THE PROJECT BY THE OWNER. ALL DRAINAGE STRUCTURES SHALL BE CLEANED OF DEBRIS AS REQUIRED DURING AND AT THE END OF CONSTRUCTION TO PROVIDE POSITIVE DRAINAGE FLOWS.
10. IF DEWATERING IS REQUIRED, THE CONTRACTOR SHALL OBTAIN ANY APPLICABLE REQUIRED PERMITS. THE CONTRACTOR IS TO COORDINATE WITH THE OWNER AND THE DESIGN ENGINEER PRIOR TO ANY EXCAVATION.
11. FIELD DENSITY TESTS SHALL BE TAKEN AT INTERVALS IN ACCORDANCE WITH THE LOCAL JURISDICTIONAL AGENCY OR TO MNDOT STANDARDS. IN THE EVENT THAT THE CONTRACT DOCUMENTS AND THE JURISDICTIONAL AGENCY REQUIREMENTS ARE NOT IN AGREEMENT, THE MOST STRINGENT SHALL GOVERN.
12. ALL SLOPES AND AREAS DISTURBED BY CONSTRUCTION SHALL BE GRADED AS PER PLANS. THE AREAS SHALL THEN BE SODDED OR SEEDED AS SPECIFIED IN THE PLANS, FERTILIZED, MULCHED, WATERED AND MAINTAINED UNTIL GROWTH IS ESTABLISHED TO MINIMUM COVERAGE OF 70% IN ALL AREAS. ANY AREAS DISTURBED FOR ANY REASON PRIOR TO FINAL ACCEPTANCE OF THE JOB SHALL BE CORRECTED BY THE CONTRACTOR AT NO ADDITIONAL COST TO THE OWNER. ALL EARTHEN AREAS WILL BE SODDED OR SEEDED AND MULCHED AS SHOWN ON THE LANDSCAPING PLAN.
13. THE CONTRACTOR SHALL BE RESPONSIBLE FOR THE CONTROL OF DUST AND DIRT RISING AND SCATTERING IN THE AIR DURING CONSTRUCTION AND SHALL PROVIDE WATER SPRINKLING OR OTHER SUITABLE METHODS OF CONTROL. THE CONTRACTOR SHALL COMPLY WITH ALL GOVERNING REGULATIONS PERTAINING TO ENVIRONMENTAL PROTECTION.
14. SOD, WHERE CALLED FOR, MUST BE INSTALLED AND MAINTAINED ON EXPOSED SLOPES WITHIN 48 HOURS OF COMPLETING FINAL GRADING, AND AT ANY OTHER TIME AS NECESSARY, TO PREVENT EROSION, SEDIMENTATION OR TURBID DISCHARGES.
15. THE CONTRACTOR SHALL ENSURE THAT LANDSCAPE ISLAND PLANTING AREAS AND OTHER PLANTING AREAS ARE NOT COMPACTED AND DO NOT CONTAIN ROAD BASE MATERIALS. THE CONTRACTOR SHALL ALSO EXCAVATE AND REMOVE ALL UNDESIRABLE MATERIAL FROM ALL AREAS ON THE SITE TO BE PLANTED AND PROPERLY DISPOSED OF IN A LEGAL MANNER.
16. THE CONTRACTOR SHALL INSTALL ALL UNDERGROUND STORM WATER PIPING PER MANUFACTURER'S RECOMMENDATIONS AND MNDOT SPECIFICATIONS.
17. PAVEMENTS SHALL BE INSTALLED IN ACCORDANCE WITH THE RECOMMENDATION OF THE SITE SPECIFIC GEOTECHNICAL EVALUATION REPORT AND CITY & MNDOT SPECIFICATIONS.
18. SPOT ELEVATIONS REPRESENT THE FINISHED SURFACE GRADE OR FLOWLINE OF CURB UNLESS OTHERWISE NOTED.
19. LIMITS OF CONSTRUCTION ARE TO THE PROPERTY LINE UNLESS OTHERWISE SPECIFIED ON THE PLAN.
20. IMMEDIATELY REPORT TO THE OWNER ANY DISCREPANCIES FOUND BETWEEN ACTUAL FIELD CONDITIONS AND CONSTRUCTION DOCUMENTS.
21. THE CONTRACTOR IS RESPONSIBLE FOR LOCATING AND PROTECTING EXISTING UTILITIES, AND SHALL REPAIR ALL DAMAGE TO EXISTING UTILITIES THAT OCCUR DURING CONSTRUCTION WITHOUT COMPENSATION.
22. BLEND NEW EARTHWORK SMOOTHLY TO TRANSITION BACK TO EXISTING GRADE.
23. ALL PROPOSED GRADES ONSITE SHALL BE 3:1 OR FLATTER UNLESS OTHERWISE INDICATED ON THE PLANS. ANY SLOPES STEEPER THAN 4:1 REQUIRE EROSION AND SEDIMENT CONTROL BLANKET.
24. ADHERE TO ALL TERMS AND CONDITIONS AS NECESSARY IN THE GENERAL N.P.D.E.S. PERMIT AND STORMWATER POLLUTION PREVENTION PLAN (SWPPP) FOR STORMWATER DISCHARGE ASSOCIATED WITH CONSTRUCTION ACTIVITIES.
25. ADJUST AND/OR CUT EXISTING PAVEMENT AS NECESSARY TO ASSURE A SMOOTH FIT AND CONTINUOUS GRADE.

## WATER STORM SEWER & SANITARY SEWER NOTES

1. THE CONTRACTOR SHALL CONSTRUCT GRAVITY SEWER LATERALS, MANHOLES, GRAVITY SEWER LINES, AND DOMESTIC WATER AND FIRE PROTECTION SYSTEM AS SHOWN ON THESE PLANS. THE CONTRACTOR SHALL FURNISH ALL NECESSARY MATERIALS, EQUIPMENT, MACHINERY, TOOLS, MEANS OF TRANSPORTATION AND LABOR NECESSARY TO COMPLETE THE WORK IN FULL AND COMPLETE ACCORDANCE WITH THE SHOWN, DESCRIBED AND REASONABLY INTENDED REQUIREMENTS OF THE CONTRACT DOCUMENTS AND JURISDICTIONAL AGENCY REQUIREMENTS. IN THE EVENT THAT THE CONTRACT DOCUMENTS AND THE JURISDICTIONAL AGENCY REQUIREMENTS ARE NOT IN AGREEMENT, THE MOST STRINGENT SHALL GOVERN.
2. ALL EXISTING UNDERGROUND UTILITY LOCATIONS SHOWN ARE APPROXIMATE. THE CONTRACTOR SHALL COMPLY WITH ALL REQUIREMENTS FOR UTILITY LOCATION AND COORDINATION IN ACCORDANCE WITH THE NOTES CONTAINED IN THE GENERAL CONSTRUCTION SECTION OF THIS SHEET.
3. THE CONTRACTOR SHALL RESTORE ALL DISTURBED VEGETATION IN KIND, UNLESS SHOWN OTHERWISE.
4. DEFLECTION OF PIPE JOINTS AND CURVATURE OF PIPE SHALL NOT EXCEED THE MANUFACTURER'S SPECIFICATIONS. SECURELY CLOSE ALL OPEN ENDS OF PIPE AND FITTINGS WITH A WATERTIGHT PLUG WHEN WORK IS NOT IN PROGRESS. THE INTERIOR OF ALL PIPES SHALL BE CLEAN AND JOINT SURFACES WIPED CLEAN AND DRY AFTER THE PIPE HAS BEEN LOWERED INTO THE TRENCH. VALVES SHALL BE PLUMB AND LOCATED ACCORDING TO THE PLANS.
5. ALL PIPE AND FITTINGS SHALL BE CAREFULLY STORED FOLLOWING MANUFACTURER'S RECOMMENDATIONS. CARE SHALL BE TAKEN TO AVOID DAMAGE TO THE COATING OR LINING IN ANY D.I. PIPE FITTINGS. ANY PIPE OR FITTING WHICH IS DAMAGED OR WHICH HAS FLAWS OR IMPERFECTIONS WHICH, IN THE OPINION OF THE ENGINEER OR OWNER, RENDERS IT UNFIT FOR USE, SHALL NOT BE USED. ANY PIPE NOT SATISFACTORY FOR USE SHALL BE CLEARLY MARKED AND IMMEDIATELY REMOVED FROM THE JOB SITE, AND SHALL BE REPLACED AT THE CONTRACTOR'S EXPENSE.
6. WATER FOR FIRE FIGHTING SHALL BE MADE AVAILABLE FOR USE BY THE CONTRACTOR PRIOR TO COMBUSTIBLES BEING BROUGHT ON SITE.
7. ALL UTILITY AND STORM DRAIN TRENCHES LOCATED UNDER AREAS TO RECEIVE PAVING SHALL BE COMPLETELY BACK FILLED IN ACCORDANCE WITH THE GOVERNING JURISDICTIONAL AGENCY'S SPECIFICATIONS. IN THE EVENT THAT THE CONTRACT DOCUMENTS AND THE JURISDICTIONAL AGENCY REQUIREMENTS ARE NOT IN AGREEMENT, THE MOST STRINGENT SHALL GOVERN.
8. UNDERGROUND UTILITY LINES SHALL BE SURVEYED BY A STATE LICENSED PROFESSIONAL LAND SURVEYOR PRIOR TO BACK FILLING.
9. CONTRACTOR SHALL PERFORM, AT THEIR OWN EXPENSE, ANY AND ALL TESTS REQUIRED BY THE SPECIFICATIONS AND/OR ANY AGENCY HAVING JURISDICTION. THESE TESTS MAY INCLUDE, BUT MAY NOT BE LIMITED TO, INFILTRATION AND EXFILTRATION, TELEVISION INSPECTION AND A MANDREL TEST ON GRAVITY SEWER. A COPY OF THE TEST RESULTS SHALL BE PROVIDED TO THE UTILITY PROVIDER, OWNER AND JURISDICTIONAL AGENCY AS REQUIRED.
10. BETWEEN WATER AND SEWER MANHOLES AND PIPES, CONTRACTOR SHALL PROVIDE FOR A MINIMUM HORIZONTAL CLEARANCE OF 10-FEET AND A MINIMUM VERTICAL SEPARATION OF 18-INCHES.
11. IF ANY EXISTING STRUCTURES TO REMAIN ARE DAMAGED DURING CONSTRUCTION IT SHALL BE THE CONTRACTORS RESPONSIBILITY TO REPAIR AND/OR REPLACE THE EXISTING STRUCTURE AS NECESSARY TO RETURN IT TO EXISTING CONDITIONS OR BETTER.
12. ALL STORM PIPE ENTERING STRUCTURES SHALL BE GASKETED AND/OR GROUTED TO ASSURE CONNECTION AT STRUCTURE IS WATERTIGHT UNLESS OTHERWISE STATED BY CITY AND STATE DESIGN STANDARDS AND SPECIFICATIONS.
13. UNLESS OTHERWISE STATED IN CITY AND STATE DESIGN STANDARDS AND SPECIFICATIONS, ALL STORM SEWER MANHOLES IN PAVED AREAS SHALL BE FLUSH WITH PAVEMENT, AND SHALL HAVE TRAFFIC BEARING RING & COVERS. MANHOLES IN UNPAVED AREAS SHALL BE 6" ABOVE FINISH GRADE. LIDS SHALL BE LABELED "STORM SEWER". EXISTING CASTINGS AND STRUCTURES WITHIN PROJECT LIMITS SHALL BE ADJUSTED TO MEET THESE CONDITIONS AND THE PROPOSED FINISHED GRADE.
14. TOPOGRAPHIC INFORMATION IS TAKEN FROM A TOPOGRAPHIC SURVEY BY LAND SURVEYORS. IF THE CONTRACTOR DOES NOT ACCEPT EXISTING TOPOGRAPHY AS SHOWN ON THE PLANS, WITHOUT EXCEPTION, THEN THE CONTRACTOR SHALL SUPPLY, AT THEIR EXPENSE, A TOPOGRAPHIC SURVEY BY A REGISTERED LAND SURVEYOR TO THE OWNER FOR REVIEW.
15. CONSTRUCTION SHALL COMPLY WITH ALL APPLICABLE GOVERNING CODES AND BE CONSTRUCTED TO SAME.
16. ALL STORM STRUCTURES SHALL HAVE A SMOOTH UNIFORM POURED MORTAR FROM INVERT IN TO INVERT OUT.
17. ROOF DRAINS SHALL BE CONNECTED TO STORM SEWER BY PREFABRICATED WYES OR AT STORM STRUCTURES. ROOF DRAINS AND TRUCK WELL DRAIN SHALL RUN AT A MINIMUM 2.0% SLOPE, UNLESS NOTED OTHERWISE, AND TIE IN AT THE CENTERLINE OF THE STORM MAIN.
18. PROVIDE INSULATION OF UNDERGROUND ROOF DRAINS AND SANITARY SEWER SERVICES IF ADEQUATE FROST DEPTH CANNOT BE PROVIDED.
19. THE CONTRACTOR SHALL PROTECT EXISTING UNDERGROUND UTILITIES AND APPURTENANCES THAT ARE TO REMAIN FROM DAMAGE DURING CONSTRUCTION OPERATIONS.
20. THE LOCATION OF EXISTING UTILITIES, STORM DRAINAGE STRUCTURES AND OTHER ABOVE AND BELOW-GRADE IMPROVEMENTS ARE APPROXIMATE AS SHOWN. IT IS THE CONTRACTOR'S RESPONSIBILITY TO DETERMINE THE EXACT LOCATION, SIZE AND INVERT ELEVATIONS OF EACH PRIOR TO THE START OF CONSTRUCTION.
21. A MINIMUM SEPARATION OF 5-FEET IS REQUIRED BETWEEN UNDERGROUND UTILITIES AND TREES UNLESS A ROOT BARRIER IS UTILIZED.
22. GAS, PHONE AND ELECTRIC SERVICES SHOWN FOR INFORMATIONAL PURPOSES ONLY. DRY UTILITY COMPANIES MAY ALTER THE DESIGN LAYOUT DURING THEIR REVIEW. CONTRACTOR TO COORDINATE FINAL DESIGN AND INSTALLATION WITH UTILITY COMPANIES.
23. COORDINATE UTILITY INSTALLATION WITH IRRIGATION DESIGN AND INSTALLATION.
24. ALL DIMENSIONS ARE TO FLOW LINE OF CURB UNLESS OTHERWISE NOTED. PERIMETER WALL DIMENSIONS ARE TO INSIDE WALL FACE. REFERENCE ARCHITECTURAL PLANS FOR EXACT WALL WIDTH AND SPECIFICATIONS.
25. REFERENCE ARCHITECTURAL PLANS (BY OTHERS) FOR EXACT BUILDING DIMENSIONS, MATERIALS SPECIFICATIONS.
26. REFERENCE M.E.P. PLANS (BY OTHERS) FOR MECHANICAL EQUIPMENT DIMENSIONS AND SPECIFICATIONS.
27. CONTRACTOR SHALL REFERENCE STRUCTURAL PLANS (BY OTHERS) FOR FOOTING AND FOUNDATION PAD PREPARATION SPECIFICATIONS.
28. CONTRACTOR SHALL REFERENCE M.E.P PLANS (BY OTHERS) FOR ROUTING OF PROPOSED ELECTRICAL & COMMUNICATIONS SERVICES AND SITE LIGHTING LAYOUT.

PRELIMINARY - NOT FOR CONSTRUCTION

| No. | REVISIONS | DATE | BY |
|---|---|---|---|

Kimley»Horn

© 2026 KIMLEY-HORN AND ASSOCIATES, INC.

11995 SINGLETREE LN, SUITE 225, EDEN PRAIRIE, MN 55344
PHONE: 612-315-1272
WWW.KIMLEY-HORN.COM

I HEREBY CERTIFY THAT THIS PLAN, SPECIFICATION OR REPORT WAS PREPARED BY ME OR UNDER MY DIRECT SUPERVISION AND THAT I AM A DULY LICENSED PROFESSIONAL 

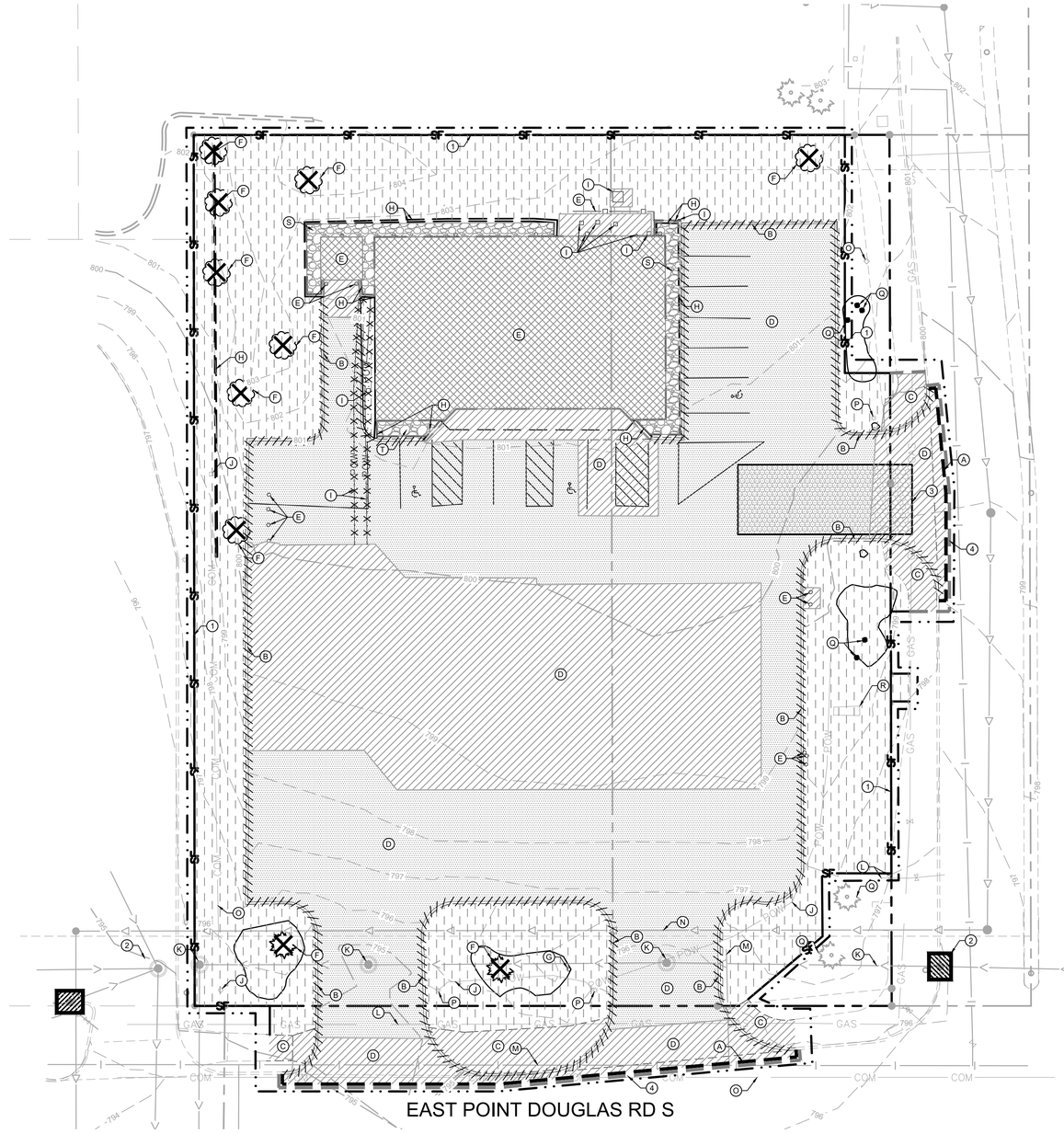


## LEGEND

- PROPERTY LINE
- REMOVE BITUMINOUS SURFACE
- REMOVE CONCRETE SURFACE
- REMOVE BUILDING
- CLEARING & GRUBBING
- FULL DEPTH SAWCUT
- REMOVE TREE
- REMOVE CONCRETE CURB & GUTTER
- REMOVE UTILITY LINES
- LIMITS OF CONSTRUCTION
- EXISTING RETAINING WALL
- EXISTING SANITARY SEWER
- EXISTING STORM SEWER
- EXISTING WATERMAIN
- EXISTING GAS MAIN
- EXISTING UNDERGROUND TELEPHONE
- EXISTING CONTOUR
- EXISTING CURB & GUTTER
- EXISTING SIGN
- EXISTING STORM MANHOLE
- EXISTING STORM CATCHBASIN
- EXISTING HYDRANT
- EXISTING POWER POLE
- EXISTING LIGHT POLE
- EXISTING TREE
- EXISTING TREE LINE
- ROCK ENTRANCE
- EROSION CONTROL BLANKET
- INLET PROTECTION
- SILT FENCE
- LIMITS OF DISTURBANCE
- BIOROLL

## DEMOLITION PLAN NOTES

1. THE CONTRACTOR IS RESPONSIBLE FOR THE DEMOLITION, REMOVAL, AND DISPOSAL (IN A LOCATION APPROVED BY ALL GOVERNING AUTHORITIES) OF ALL STRUCTURES, PADS, WALLS, FLUMES, FOUNDATIONS, PARKING, DRIVES, DRAINAGE STRUCTURES, UTILITIES, ETC. SUCH THAT THE IMPROVEMENTS ON THE PLANS CAN BE CONSTRUCTED. FACILITIES TO BE REMOVED SHALL BE UNDERCUT TO SUITABLE MATERIAL AND BROUGHT TO GRADE WITH SUITABLE COMPACTED FILL MATERIAL PER THE PROJECT DOCUMENTS.
2. THE CONTRACTOR IS RESPONSIBLE FOR REMOVING ALL DEBRIS FROM THE SITE AND DISPOSING OF THE DEBRIS IN A LAWFUL MANNER AND IN ACCORDANCE WITH LOCAL AND STATE REGULATIONS. THE CONTRACTOR SHALL OBTAIN ANY REQUIRED PERMITS FOR DEMOLITION AND DISPOSAL FROM THE APPROPRIATE LOCAL AND STATE AGENCIES. CONTRACTOR SHALL PROVIDE COPIES OF THE PERMIT AND RECEIPTS OF DISPOSAL OF MATERIALS TO THE OWNER AND OWNERS REPRESENTATIVE, INCLUDING THE TYPE OF DEBRIS AND LOCATION WHERE IT WAS DISPOSED.
3. THE CONTRACTOR SHALL MAINTAIN UTILITY SERVICES TO ADJACENT PROPERTIES AT ALL TIMES. UTILITY SERVICES SHALL NOT BE INTERRUPTED WITHOUT APPROVAL FROM THE CONSTRUCTION MANAGER AND COORDINATION WITH THE ADJACENT PROPERTIES AND/OR THE CITY.
4. THE CONTRACTOR SHALL COORDINATE WITH RESPECTIVE UTILITY COMPANIES PRIOR TO THE REMOVAL AND/OR RELOCATION OF UTILITIES. THE CONTRACTOR SHALL COORDINATE WITH THE UTILITY COMPANY CONCERNING PORTIONS OF WORK WHICH MAY BE PERFORMED BY THE UTILITY COMPANY'S FORCES AND ANY FEES WHICH ARE TO BE PAID TO THE UTILITY COMPANY FOR THEIR SERVICES. THE CONTRACTOR IS RESPONSIBLE FOR PAYING ALL FEES AND CHARGES.
5. THE LOCATIONS OF EXISTING UTILITIES SHOWN ON THE PLAN HAVE BEEN DETERMINED FROM THE BEST INFORMATION AVAILABLE AND ARE GIVEN FOR THE CONVENIENCE OF THE CONTRACTOR. THE ENGINEER ASSUMES NO RESPONSIBILITY FOR THEIR ACCURACY. PRIOR TO THE START OF ANY DEMOLITION ACTIVITY, THE CONTRACTOR SHALL NOTIFY THE AFFECTED UTILITY COMPANIES TO PROVIDE LOCATIONS OF EXISTING UTILITIES WITHIN PROPOSED WORK AREA.
6. EXISTING SEWERS, PIPING AND UTILITIES SHOWN ARE BASED ON AVAILABLE RECORD PLAN DATA AND/OR FIELD UTILITY MARKINGS AND ARE NOT TO BE INTERPRETED AS THE EXACT LOCATION. ADDITIONAL UNMARKED OBSTACLES MAY EXIST ON THE SITE. VERIFY EXISTING CONDITIONS AND PROCEED WITH CAUTION AROUND ANY ANTICIPATED UNDERGROUND FEATURES. GIVE NOTICE TO AFFECTED UTILITY COMPANIES REGARDING REMOVAL OF SERVICE LINES AND CAP ANY ABANDONED LINES BEFORE PRECEDING WITH THE PROPOSED WORK.
7. ELECTRICAL, TELEPHONE, CABLE, WATER, FIBER OPTIC, AND/OR GAS LINES NEEDING TO BE REMOVED OR RELOCATED SHALL BE COORDINATED WITH THE AFFECTED UTILITY COMPANY. ADEQUATE TIME SHALL BE PROVIDED FOR RELOCATION AND CLOSE COORDINATION WITH THE UTILITY COMPANY IS NECESSARY TO PROVIDE A SMOOTH TRANSITION IN UTILITY SERVICE. CONTRACTOR SHALL PAY CLOSE ATTENTION TO EXISTING UTILITIES WITHIN ANY ROAD RIGHT-OF-WAY DURING CONSTRUCTION.
8. CONTRACTOR MUST PROTECT THE PUBLIC AT ALL TIMES WITH FENCING, BARRICADES, ENCLOSURES, ETC. (AND OTHER APPROPRIATE BEST MANAGEMENT PRACTICES) AS APPROVED BY THE CONSTRUCTION MANAGER. MAINTENANCE OF TRAFFIC CONTROL SHALL BE COORDINATED IN ACCORDANCE WITH THE CITY OF COTTAGE GROVE, WASHINGTON COUNTY, AND MNDOT AS NECESSARY.
9. CONTRACTOR SHALL MAINTAIN ACCESS TO ADJACENT PROPERTIES DURING CONSTRUCTION, AND SHALL NOTIFY ADJACENT PROPERTY OWNERS IF ACCESS WILL BE INTERRUPTED OR ALTERED AT ANY TIME DURING CONSTRUCTION.
10. PRIOR TO THE START OF DEMOLITION, INSTALL EROSION CONTROL BMP'S IN ACCORDANCE WITH THE EROSION & SEDIMENT CONTROL PLANS / SWPPP.
11. CONTRACTOR MAY LIMIT SAW-CUT AND PAVEMENT REMOVAL TO ONLY THOSE AREAS WHERE IT IS REQUIRED AS SHOWN ON THESE CONSTRUCTION PLANS BUT IF ANY DAMAGE IS INCURRED ON ANY OF THE SURROUNDING PAVEMENT OR CURB, THE CONTRACTOR SHALL BE RESPONSIBLE FOR ITS REMOVAL AND REPAIR.
12. THE CONTRACTOR SHALL COORDINATE WATER MAIN WORK WITH THE CITY WATER AND FIRE DEPARTMENTS TO ENSURE ADEQUATE FIRE PROTECTION IS CONSTANTLY AVAILABLE TO THE SITE AND SURROUNDING PROPERTIES THROUGH ALL PHASES OF CONSTRUCTION. CONTRACTOR WILL BE RESPONSIBLE FOR ARRANGING/PROVIDING ANY REQUIRED WATER MAIN SHUT OFFS WITH THE CITY OF COTTAGE GROVE. ANY COSTS ASSOCIATED WITH WATER MAIN SHUT OFFS WILL BE THE RESPONSIBILITY OF THE CONTRACTOR AND NO EXTRA COMPENSATION WILL BE PROVIDED.
13. IN THE EVENT A WELL IS FOUND, THE CONTRACTOR SHALL CONTACT THE ENGINEER AND OWNER IMMEDIATELY. ALL WELLS SHALL BE SEALED BY A LICENSED WELL CONTRACTOR IN ACCORDANCE WITH STATE REQUIREMENTS.
14. IN THE EVENT THAT UNKNOWN CONTAINERS OR TANKS ARE ENCOUNTERED, THE CONTRACTOR SHALL CONTACT THE OWNER AND/OR OWNERS REPRESENTATIVE IMMEDIATELY. ALL CONTAINERS SHALL BE DISPOSED OF AT A PERMITTED LANDFILL PER THE PROJECT DOCUMENTS.
15. CONTRACTOR SHALL NOTIFY THE ENGINEER IF ANY EXISTING DRAINTILE IS ENCOUNTERED ON SITE; ACTIVE DRAINTILE SHALL NOT BE REMOVED WITHOUT APPROVAL FROM THE ENGINEER.
16. IF CONTAMINATED MATERIAL IS ENCOUNTERED ON THE PROJECT SITE, THE CONTRACTOR SHALL STOP WORK AND NOTIFY THE OWNER AND ENGINEER IMMEDIATELY.

## EROSION CONTROL PLAN NOTES

1. THE STORM WATER POLLUTION PREVENTION PLAN ("SWPPP") IS COMPRISED OF THE EROSION CONTROL PLAN, THE STANDARD DETAILS, THE PLAN NARRATIVE, ATTACHMENTS INCLUDED IN THE SPECIFICATIONS OF THE SWPPP, PLUS THE PERMIT AND ALL SUBSEQUENT REPORTS AND RELATED DOCUMENTS.
2. ALL CONTRACTORS AND SUBCONTRACTORS INVOLVED WITH LAND DISTURBING ACTIVITIES SHALL OBTAIN A COPY OF THE SWPPP AND NATIONAL POLLUTANT DISCHARGE ELIMINATION SYSTEM (NPDES) GENERAL PERMIT, AND BECOME FAMILIAR WITH THEIR CONTENTS.
3. BEST MANAGEMENT PRACTICES (BMP'S) AND CONTROLS SHALL CONFORM TO FEDERAL, STATE AND LOCAL REQUIREMENTS, AS APPLICABLE. THE CONTRACTOR SHALL IMPLEMENT ADDITIONAL CONTROLS AS DIRECTED BY THE PERMITTING AGENCY, ENGINEER OR OWNER.
4. SITE ENTRY AND EXIT LOCATIONS SHALL BE MAINTAINED IN A CONDITION THAT WILL PREVENT THE TRACKING OR FLOWING OF SEDIMENT ONTO PUBLIC ROADWAYS. SEDIMENT SPILLED, DROPPED, WASHED, OR TRACKED ONTO A PUBLIC ROADWAY FROM THE CONSTRUCTION SITE MUST BE REMOVED AS SOON AS PRACTICABLE. WHEN WASHING IS REQUIRED TO REMOVE SEDIMENT PRIOR TO ENTRANCE ONTO A PUBLIC ROADWAY, IT SHALL BE DONE IN AN AREA STABILIZED WITH CRUSHED STONE WHICH DRAINS INTO AN APPROVED SEDIMENT BASIN. ANY FINES IMPOSED FOR DISCHARGING SEDIMENT ONTO A PUBLIC RIGHT OF WAY SHALL BE PAID BY THE CONTRACTOR.
5. TEMPORARY SEEDING OR OTHER APPROVED METHODS OF STABILIZATION SHALL BE INITIATED WITHIN 7 DAYS OF THE LAST DISTURBANCE ON ANY AREA OF THE SITE.
6. THE CONTRACTOR SHALL MINIMIZE LAND DISTURBANCE AND CLEARING TO THE MAXIMUM EXTENT PRACTICAL OR AS REQUIRED BY THE GENERAL PERMIT.
7. CONTRACTOR SHALL DENOTE ON THE PLAN THE TEMPORARY PARKING AND STORAGE AREA WHICH SHALL ALSO BE USED AS THE EQUIPMENT MAINTENANCE AND CLEANING AREA, EMPLOYEE PARKING AREA, AND AREA FOR LOCATING PORTABLE FACILITIES, OFFICE TRAILERS, AND TOILET FACILITIES.
8. ALL WASH WATER FROM THE CONSTRUCTION SITE (CONCRETE TRUCKS, VEHICLE CLEANING, EQUIPMENT CLEANING, ETC.) SHALL BE DETAINED AND PROPERLY TREATED BEFORE DISPOSAL.
9. SUFFICIENT OIL AND GREASE ABSORBING MATERIALS AND FLOTATION BOOMS SHALL BE MAINTAINED ON SITE OR READILY AVAILABLE TO CONTAIN AND CLEAN-UP FUEL OR CHEMICAL SPILLS AND LEAKS.
10. THE CONTRACTOR SHALL BE RESPONSIBLE FOR DUST CONTROL ON SITE. THE USE OF MOTOR OILS AND OTHER PETROLEUM BASED OR TOXIC LIQUIDS FOR DUST SUPPRESSION OPERATIONS IS PROHIBITED.
11. RUBBISH, TRASH, GARBAGE, LITTER, OR OTHER SUCH MATERIALS SHALL BE DEPOSITED INTO SEALED CONTAINERS. MATERIALS SHALL BE PREVENTED FROM LEAVING THE PREMISES THROUGH THE ACTION OF WIND OR STORM WATER DISCHARGE INTO DRAINAGE DITCHES OR WATERS OF THE STATE.
12. STAGING AREAS, STOCKPILES, SPOILS, ETC. SHALL BE LOCATED OUTSIDE OF DRAINAGE WAYS SUCH THAT STORM WATER RUNOFF WILL NOT BE ADVERSELY AFFECTED. PROVIDE STABILIZATION MEASURES SUCH AS PERIMETER EROSION CONTROL BMP'S, SEEDING, OR OTHER COVERING AS NECESSARY TO PREVENT EROSION.
13. CONTRACTOR SHALL BE RESPONSIBLE FOR RE-ESTABLISHING ANY EROSION CONTROL BMP DISTURBED DURING CONSTRUCTION OPERATIONS. NOTIFY THE OWNER'S REPRESENTATIVE OF ANY DEFICIENCIES IN THE ESTABLISHED EROSION CONTROL MEASURES THAT MAY LEAD TO UNAUTHORIZED DISCHARGE OF STORM WATER POLLUTANTS. UNAUTHORIZED POLLUTANTS INCLUDE (BUT ARE NOT LIMITED TO) EXCESS CONCRETE DUMPING, CONCRETE RESIDUE, PAINTS, SOLVENTS, GREASES, FUELS, LUBRICANT OILS, PESTICIDES, AND SOLID WASTE MATERIALS.
14. EROSION CONTROL BMP'S SHOWN ON THESE PLANS SHALL BE INSTALLED PRIOR TO THE START OF LAND-DISTURBING ACTIVITIES ON THE PROJECT, AND INITIATED AS SOON AS PRACTICABLE.
15. THE CONTRACTOR IS SOLELY RESPONSIBLE FOR COMPLYING WITH THE REQUIREMENTS OF THE AUTHORITIES HAVING JURISDICTION, AND SHALL MAINTAIN COMPLIANCE WITH APPLICABLE LAWS AND REGULATIONS FOR THE DURATION OF CONSTRUCTION.
16. THE CONTRACTOR SHALL FIELD ADJUST AND/OR PROVIDE ADDITIONAL EROSION CONTROL BMP'S AS NEEDED TO PREVENT EROSION AND OFF-SITE SEDIMENT DISCHARGE FROM THE CONSTRUCTION SITE. LOG AND RECORD ANY ADJUSTMENTS AND DEVIATIONS FROM THE APPROVED EROSION CONTROL PLANS WITHIN THE SWPPP DOCUMENTS STORED IN THE JOB SITE TRAILER.

## SWPPP UPDATES & AMENDMENTS

THE CONTRACTOR MUST UPDATE THE SWPPP BY NOTING ON THE SITE MAPS IN THE JOB SITE BINDER TO REFLECT THE PROGRESS OF CONSTRUCTION ACTIVITIES AND GENERAL CHANGES TO THE PROJECT SITE FOR THE DURATION OF LAND DISTURBING ACTIVITIES. AT A MINIMUM, UPDATES SHALL BE MADE DAILY TO TRACK CONSTRUCTION PROGRESS DESCRIBED IN THE SEQUENCE OF CONSTRUCTION. THE CONTRACTOR IS RESPONSIBLE FOR NOTING THE LOCATION OF THE JOB SITE TRAILER, TEMPORARY PARKING & LAYDOWN AREAS, PORTA-POTTY, WHEEL WASH, CONCRETE WASHOUT, FUEL & MATERIAL STORAGE, SOLID WASTE CONTAINERS, AND OTHER CONSTRUCTION RELATED FACILITIES THAT MAY IMPACT STORMWATER RUNOFF.

## PHASE 1 SEQUENCE OF CONSTRUCTION

1. INSTALL PERIMETER EROSION CONTROL (I.E. SILT FENCE) AND INLET PROTECTION AT EXISTING STORMWATER INLETS.
2. CONSTRUCT STABILIZED CONSTRUCTION ENTRANCE AND CONCRETE WASHOUT
3. PREPARE TEMPORARY PARKING AND STORAGE AREA.
4. CONSTRUCT AND STABILIZE DIVERSIONS AND TEMPORARY SEDIMENT BASINS.
5. CLEAR AND GRUB THE SITE.
6. BEGIN MASS SITE GRADING AND ROUGH GRADE SITE SUFFICIENTLY TO ESTABLISH PROPOSED DRAINAGE PATTERNS.
7. START CONSTRUCTION OF THE BUILDING PAD AND STRUCTURES.
8. TEMPORARILY SEED, THROUGHOUT CONSTRUCTION, DISTURBED AREAS THAT WILL BE INACTIVE FOR 14 DAYS OR MORE OR AS REQUIRED BY THE NPDES AND/OR CITY GRADING PERMIT(S).

NOTE: THE SEQUENCE OF CONSTRUCTION IS INTENDED TO CONVEY THE GENERAL CONCEPTS OF THE EROSION CONTROL DESIGN AND SHOULD NOT BE RELIED UPON FOR CONSTRUCTION PURPOSES. THE CONTRACTOR IS SOLELY RESPONSIBLE FOR DETAILED PHASING AND CONSTRUCTION SEQUENCING NECESSARY TO CONSTRUCT THE PROPOSED IMPROVEMENTS. THE CONTRACTOR SHALL NOTIFY THE ENGINEER IN WRITING IMMEDIATELY, PRIOR TO AND/OR DURING CONSTRUCTION IF ANY ADDITIONAL INFORMATION ON THE CONSTRUCTION SEQUENCE IS NECESSARY.

## PHASE I BMP QUANTITIES

| | |
|---|---|
| SILT FENCE | ±714 LF |
| INLET PROTECTION | 4 EA |
| ROCK CONSTRUCTION ENTRANCE | 1 EA |
| BIO ROLL | ±247 LF |

## EROSION CONTROL KEYNOTE LEGEND

| | |
|---|---|
| 1 | SILT FENCE |
| 2 | INLET PROTECTION |
| 3 | ROCK CONSTRUCTION ENTRANCE |
| 4 | BIOROLL |

## DEMOLITION KEYNOTE LEGEND

| | |
|---|---|
| A | SAWCUT EXISTING PAVEMENT |
| B | REMOVE EXISTING CURB / LIMITS OF CURB REMOVAL |
| C | REMOVE EXISTING SIDEWALK / CURB RAMP |
| D | REMOVE EXISTING PAVEMENT |
| E | REMOVE EXISTING BUILDING / STRUCTURE |
| F | REMOVE EXISTING TREE |
| G | REMOVE EXISTING SIGN / FLAG POLE |
| H | REMOVE EXISTING WOOD WALL / RETAINING WALL |
| I | REMOVE EXISTING ELECTRICAL LINE / EQUIPMENT |
| J | PROTECT EXISTING ELECTRICAL LINE / EQUIPMENT |
| K | PROTECT EXISTING STORM SEWER LINE / STRUCTURE |
| L | PROTECT EXISTING NATURAL GAS LINE / STRUCTURE |
| M | PROTECT EXISTING WATER LINE / HYDRANT / VALVE |
| N | PROTECT EXISTING SANITARY SEWER LINE / STRUCTURE |
| O | PROTECT EXISTING UTILITY LINE / STRUCTURE |
| P | PROTECT EXISTING LIGHT POLE |
| Q | PROTECT EXISTING TREE |
| R | PROTECT EXISTING PYLON SIGN |
| S | REMOVE GRAVEL BACKFILL FROM RETAINING WALL |

NORTH

GRAPHIC SCALE IN FEET
0 10 20 40

811 Know what's below. Call before you dig.

PRELIMINARY - NOT FOR CONSTRUCTION

| No. | REVISIONS | DATE | BY |
|---|---|---|---|

Kimley»Horn

© 2026 KIMLEY-HORN AND ASSOCIATES, INC.

11995 SINGLETREE LN, SUITE 225, EDEN PRAIRIE, MN 55344
PHONE: 612-315-1272
WWW.KIMLEY-HORN.COM

I HEREBY CERTIFY THAT THIS PLAN, SPECIFICATION OR REPORT WAS PREPARED BY ME OR UNDER MY DIRECT SUPERVISION AND THAT I AM A DULY LICENSED PROFESSIONAL ENGINEER UNDER THE LAWS OF THE STATE OF MINNESOTA.

BRIAN M. WURDEMAN, P.E.
DATE: 01/26/2026 LIC. NO. 53113 MN

| | |
|---|---|
| KHA PROJECT | 161369000 |
| DATE | 01/26/2026 |
| SCALE | AS SHOWN |
| DESIGNED BY | MTL |
| DRAWN BY | AKK |
| CHECKED BY | BMW |

# DEMO & EROSION AND SEDIMENT CONTROL PLAN

PANERA - COTTAGE GROVE
PREPARED FOR
CA COMMERCIAL
COTTAGE GROVE MN

SHEET NUMBER
C200

K:\TCW_LDEV\ca commercial\cottage grove, mn\3 Design\CAD\plansheets\C2-DEMO & ESC PH1 PLAN.dwg February 17, 2026 - 2:20pm
This document, together with the concepts and designs presented herein, as an instrument of service, is intended only for the specific purpose and client for which it was prepared. Reuse of and improper reliance on this document without written authorization and adaptation by Kimley-Horn and Associates, Inc. shall be without liability to Kimley-Horn and Associates, Inc.

K:\TCW_LDEV\ca commercial\cottage grove, mn\3 Design\CAD\plansheets\C3-EROS PH2 PLAN.dwg February 17, 2026 - 2:21pm

This document, together with the concepts and designs presented herein, as an instrument of service, is intended only for the specific purpose and client for which it was prepared. Reuse of and improper reliance on this document without written authorization and adaptation by Kimley-Horn and Associates, Inc. shall be without liability to Kimley-Horn and Associates, Inc.

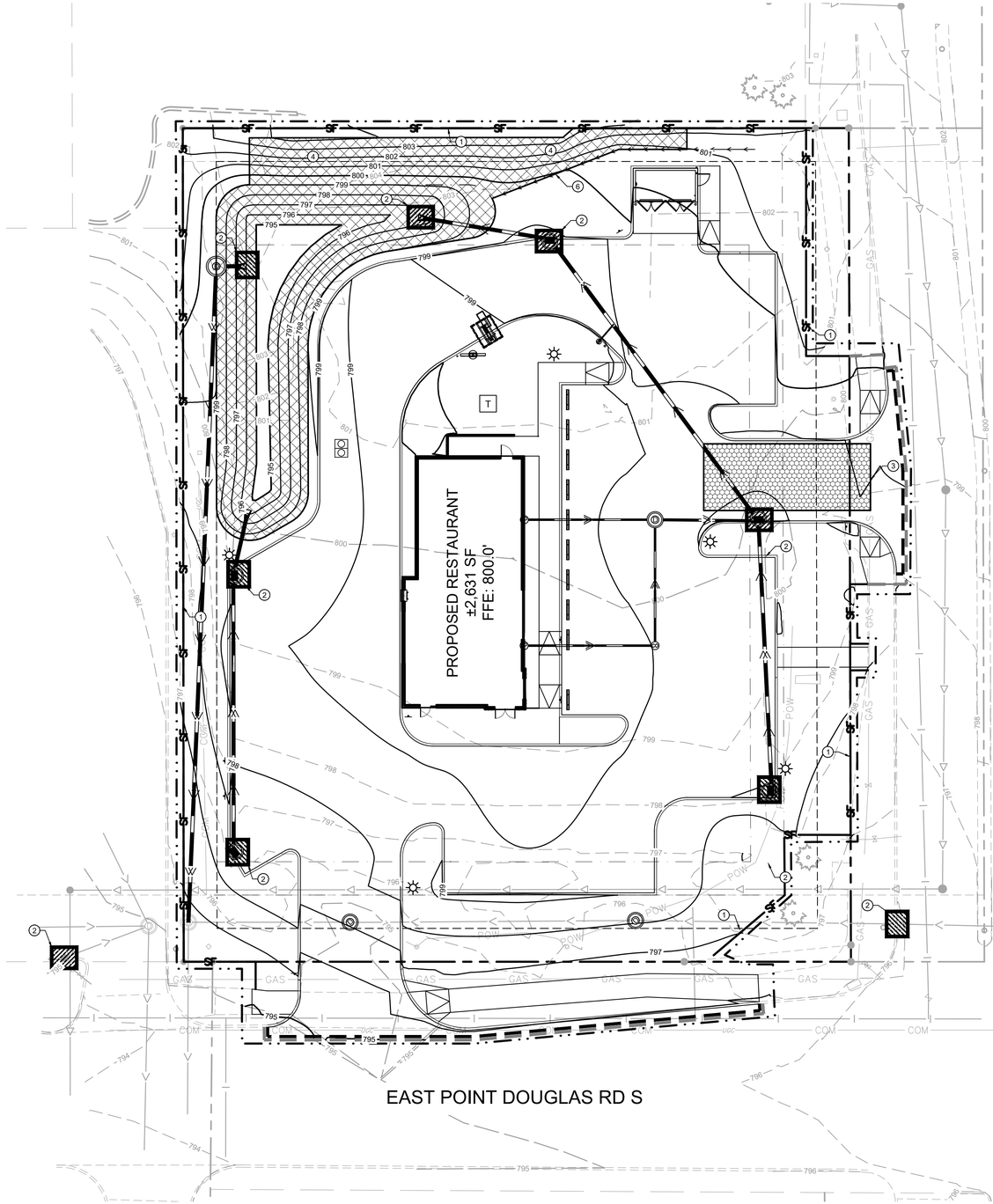


Know what's **below.**
**Call** before you dig.

| AREA SUMMARY | |
|---|---|
| TOTAL PROPERTY AREA | 1.15 AC / 50,094 SF |
| EXISTING IMPERVIOUS AREA | 0.79 AC / 33,483 SF |
| EXISTING PERVIOUS AREA | 036 AC / 16,493 SF |
| PROPOSED IMPERVIOUS AREA | 0.71 AC / 30,744 SF |
| PROPOSED PERVIOUS AREA | 0.54 AC / 23,525 SF |
| TOTAL DISTURBED AREA | 1.25 AC / 54,269 SF |

| PHASE 2 BMP QUANTITIES | |
|---|---|
| SILT FENCE | ±744 LF |
| INLET PROTECTION | 9 EA |
| ROCK CONSTRUCTION ENTRANCE | 1 EA |
| BIO ROLL | ±247 LF |
| EROSION CONTROL BLANKET | ±5,620 SF |

## KEYNOTE LEGEND

| | |
|---|---|
| 1 | SILT FENCE |
| 2 | INLET PROTECTION |
| 3 | ROCK CONSTRUCTION ENTRANCE |
| 4 | EROSION CONTROL BLANKET |
| 5 | BIOROLL |
| 6 | SWALE |

## LEGEND

- ROCK ENTRANCE
- EROSION CONTROL BLANKET
- INLET PROTECTION
- SILT FENCE (SF)
- LIMITS OF DISTURBANCE
- BIOROLL

## EROSION CONTROL PLAN NOTES

1. THE STORM WATER POLLUTION PREVENTION PLAN ("SWPPP") IS COMPRISED OF THE EROSION CONTROL PLAN, THE STANDARD DETAILS, THE PLAN NARRATIVE, ATTACHMENTS INCLUDED IN THE SPECIFICATIONS OF THE SWPPP, PLUS THE PERMIT AND ALL SUBSEQUENT REPORTS AND RELATED DOCUMENTS.
2. ALL CONTRACTORS AND SUBCONTRACTORS INVOLVED WITH LAND DISTURBING ACTIVITIES SHALL OBTAIN A COPY OF THE SWPPP AND NATIONAL POLLUTANT DISCHARGE ELIMINATION SYSTEM (NPDES) GENERAL PERMIT, AND BECOME FAMILIAR WITH THEIR CONTENTS.
3. BEST MANAGEMENT PRACTICES (BMP'S) AND CONTROLS SHALL CONFORM TO FEDERAL, STATE AND LOCAL REQUIREMENTS, AS APPLICABLE. THE CONTRACTOR SHALL IMPLEMENT ADDITIONAL CONTROLS AS DIRECTED BY THE PERMITTING AGENCY, ENGINEER OR OWNER.
4. SITE ENTRY AND EXIT LOCATIONS SHALL BE MAINTAINED IN A CONDITION THAT WILL PREVENT THE TRACKING OR FLOWING OF SEDIMENT ONTO PUBLIC ROADWAYS. SEDIMENT SPILLED, DROPPED, WASHED, OR TRACKED ONTO A PUBLIC ROADWAY FROM THE CONSTRUCTION SITE MUST BE REMOVED AS SOON AS PRACTICABLE. WHEN WASHING IS REQUIRED TO REMOVE SEDIMENT PRIOR TO ENTRANCE ONTO A PUBLIC ROADWAY, IT SHALL BE DONE IN AN AREA STABILIZED WITH CRUSHED STONE WHICH DRAINS INTO AN APPROVED SEDIMENT BASIN. ANY FINES IMPOSED FOR DISCHARGING SEDIMENT ONTO A PUBLIC RIGHT OF WAY SHALL BE PAID BY THE CONTRACTOR.
5. TEMPORARY SEEDING OR OTHER APPROVED METHODS OF STABILIZATION SHALL BE INITIATED WITHIN 7 DAYS OF THE LAST DISTURBANCE ON ANY AREA OF THE SITE.
6. THE CONTRACTOR SHALL MINIMIZE LAND DISTURBANCE AND CLEARING TO THE MAXIMUM EXTENT PRACTICAL OR AS REQUIRED BY THE GENERAL PERMIT.
7. CONTRACTOR SHALL DENOTE ON THE PLAN THE TEMPORARY PARKING AND STORAGE AREA WHICH SHALL ALSO BE USED AS THE EQUIPMENT MAINTENANCE AND CLEANING AREA, EMPLOYEE PARKING AREA, AND AREA FOR LOCATING PORTABLE FACILITIES, OFFICE TRAILERS, AND TOILET FACILITIES.
8. ALL WASH WATER FROM THE CONSTRUCTION SITE (CONCRETE TRUCKS, VEHICLE CLEANING, EQUIPMENT CLEANING, ETC.) SHALL BE DETAINED AND PROPERLY TREATED BEFORE DISPOSAL.
9. SUFFICIENT OIL AND GREASE ABSORBING MATERIALS AND FLOTATION BOOMS SHALL BE MAINTAINED ON SITE OR READILY AVAILABLE TO CONTAIN AND CLEAN-UP FUEL OR CHEMICAL SPILLS AND LEAKS.
10. THE CONTRACTOR SHALL BE RESPONSIBLE FOR DUST CONTROL ON SITE. THE USE OF MOTOR OILS AND OTHER PETROLEUM BASED OR TOXIC LIQUIDS FOR DUST SUPPRESSION OPERATIONS IS PROHIBITED.
11. RUBBISH, TRASH, GARBAGE, LITTER, OR OTHER SUCH MATERIALS SHALL BE DEPOSITED INTO SEALED CONTAINERS. MATERIALS SHALL BE PREVENTED FROM LEAVING THE PREMISES THROUGH THE ACTION OF WIND OR STORM WATER DISCHARGE INTO DRAINAGE DITCHES OR WATERS OF THE STATE.
12. STAGING AREAS, STOCKPILES, SPOILS, ETC. SHALL BE LOCATED OUTSIDE OF DRAINAGE WAYS SUCH THAT STORM WATER RUNOFF WILL NOT BE ADVERSELY AFFECTED. PROVIDE STABILIZATION MEASURES SUCH AS PERIMETER EROSION CONTROL BMP'S, SEEDING, OR OTHER COVERING AS NECESSARY TO PREVENT EROSION.
13. CONTRACTOR SHALL BE RESPONSIBLE FOR RE-ESTABLISHING ANY EROSION CONTROL BMP DISTURBED DURING CONSTRUCTION OPERATIONS. NOTIFY THE OWNER'S REPRESENTATIVE OF ANY DEFICIENCIES IN THE ESTABLISHED EROSION CONTROL MEASURES THAT MAY LEAD TO UNAUTHORIZED DISCHARGE OF STORM WATER POLLUTANTS. UNAUTHORIZED POLLUTANTS INCLUDE (BUT ARE NOT LIMITED TO) EXCESS CONCRETE DUMPING, CONCRETE RESIDUE, PAINTS, SOLVENTS, GREASES, FUELS, LUBRICANT OILS, PESTICIDES, AND SOLID WASTE MATERIALS.
14. EROSION CONTROL BMP'S SHOWN ON THESE PLANS SHALL BE INSTALLED PRIOR TO THE START OF LAND-DISTURBING ACTIVITIES ON THE PROJECT, AND INITIATED AS SOON AS PRACTICABLE.
15. THE CONTRACTOR IS SOLELY RESPONSIBLE FOR COMPLYING WITH THE REQUIREMENTS OF THE AUTHORITIES HAVING JURISDICTION, AND SHALL MAINTAIN COMPLIANCE WITH APPLICABLE LAWS AND REGULATIONS FOR THE DURATION OF CONSTRUCTION.
16. THE CONTRACTOR SHALL FIELD ADJUST AND/OR PROVIDE ADDITIONAL EROSION CONTROL BMP'S AS NEEDED TO PREVENT EROSION AND OFF-SITE SEDIMENT DISCHARGE FROM THE CONSTRUCTION SITE. LOG AND RECORD ANY ADJUSTMENTS AND DEVIATIONS FROM THE APPROVED EROSION CONTROL PLANS WITHIN THE SWPPP DOCUMENTS STORED IN THE JOB SITE TRAILER.

## SWPPP UPDATES & AMENDMENTS

THE CONTRACTOR MUST UPDATE THE SWPPP BY NOTING ON THE SITE MAPS IN THE JOB SITE BINDER TO REFLECT THE PROGRESS OF CONSTRUCTION ACTIVITIES AND GENERAL CHANGES TO THE PROJECT SITE FOR THE DURATION OF LAND DISTURBING ACTIVITIES. AT A MINIMUM, UPDATES SHALL BE MADE DAILY TO TRACK CONSTRUCTION PROGRESS DESCRIBED IN THE SEQUENCE OF CONSTRUCTION. THE CONTRACTOR IS RESPONSIBLE FOR NOTING THE LOCATION OF THE JOB SITE TRAILER, TEMPORARY PARKING & LAYDOWN AREAS, PORTA-POTTY, WHEEL WASH, CONCRETE WASHOUT, FUEL & MATERIAL STORAGE, SOLID WASTE CONTAINERS, AND OTHER CONSTRUCTION RELATED FACILITIES THAT MAY IMPACT STORMWATER RUNOFF.

## PHASE 2 SEQUENCE OF CONSTRUCTION

1. TEMPORARILY SEED, THROUGHOUT CONSTRUCTION, DENUDED AREAS THAT WILL BE INACTIVE FOR 14 DAYS OR MORE.
2. CONSTRUCT UNDERGROUND SITE UTILITIES AND STORM SEWER, INCLUDING UNDERGROUND STORMWATER MANAGEMENT SYSTEM.
3. INSTALL APPROPRIATE INLET PROTECTION AT ANY NEW STORM SEWER STRUCTURES AS EACH STRUCTURE IS CONSTRUCTED.
4. COMPLETE SITE GRADING AND PERMANENTLY STABILIZE AREAS TO BE VEGETATED AS THEY ARE BROUGHT TO FINAL GRADE.
5. PLACE PAVEMENT BASE MATERIAL AND INSTALL SUBDRAINAGE SYSTEM.
6. CONSTRUCT PAVEMENTS, CURB & GUTTER, AND SIDEWALKS.
7. AS APPROPRIATE, REPLACE & MAINTAIN INLET PROTECTION DEVICES WITHIN PAVED AREAS AS WORK PROGRESSES.
8. COMPLETE FINAL GRADING AND INSTALL OF PERMANENT STABILIZATION (SEEDING, SODDING, ETC.) WITHIN LANDSCAPED AREAS.
9. WHEN THE SITE HAS ACHIEVED FINAL STABILIZATION AS DEFINED BY THE APPLICABLE EROSION CONTROL PERMITS, REMOVE ALL REMAINING TEMPORARY EROSION & SEDIMENT CONTROL BMP'S AND RE-STABILIZE ANY AREAS DISTURBED BY THE REMOVAL.

NOTE: THE SEQUENCE OF CONSTRUCTION IS INTENDED TO CONVEY THE GENERAL CONCEPTS OF THE EROSION CONTROL DESIGN AND SHOULD NOT BE RELIED UPON FOR CONSTRUCTION PURPOSES. THE CONTRACTOR IS SOLELY RESPONSIBLE FOR DETAILED PHASING AND CONSTRUCTION SEQUENCING NECESSARY TO CONSTRUCT THE PROPOSED IMPROVEMENTS. THE CONTRACTOR SHALL NOTIFY THE ENGINEER IN WRITING IMMEDIATELY, PRIOR TO AND/OR DURING CONSTRUCTION IF ANY ADDITIONAL INFORMATION ON THE CONSTRUCTION SEQUENCE IS NECESSARY.

NORTH

GRAPHIC SCALE IN FEET
0 10 20 40

PRELIMINARY - NOT FOR CONSTRUCTION

| No. | REVISIONS | DATE | BY |
|---|---|---|---|

Kimley»Horn

© 2026 KIMLEY-HORN AND ASSOCIATES, INC.

11995 SINGLETREE LN. SUITE 225, EDEN PRAIRIE, MN 55344
PHONE: 612-315-1272
WWW.KIMLEY-HORN.COM

I HEREBY CERTIFY THAT THIS PLAN, SPECIFICATION OR REPORT WAS PREPARED BY ME OR UNDER MY DIRECT SUPERVISION AND THAT I AM A DULY LICENSED PROFESSIONAL ENGINEER UNDER THE LAWS OF THE STATE OF MINNESOTA.

BRIAN M. WURDEMAN, P.E.
DATE: 01/26/2026 | MN LIC. NO. 53113

| | |
|---|---|
| KHA PROJECT | 161369000 |
| DATE | 01/26/2026 |
| SCALE | AS SHOWN |
| DESIGNED BY | MTL |
| DRAWN BY | AKK |
| CHECKED BY | BMW |

# EROSION AND SEDIMENT CONTROL PHASE 2 PLAN

**PANERA - COTTAGE GROVE**
PREPARED FOR
**CA COMMERCIAL**
COTTAGE GROVE MN

SHEET NUMBER
**C301**

K:\TCW_LDEV\ca commercial\cottage grove, mn\3 Design\CAD\plansheets\C3-EROS DETAILS.dwg February 17, 2026 - 2:21pm

This document, together with the concepts and designs presented herein, as an instrument of service, is intended only for the specific purpose and client for which it was prepared. Reuse of and improper reliance on this document without written authorization and adaptation by Kimley-Horn and Associates, Inc. shall be without liability to Kimley-Horn and Associates, Inc.

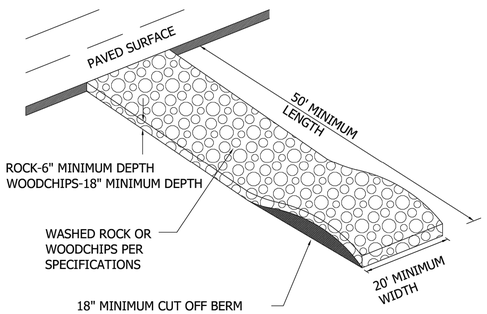


NOTES:
1. FILTER FABRIC SHALL BE PLACED UNDER ROCK OR WOODCHIPS TO STOP MUD MIGRATION THROUGH ROCK.
2. ENTRANCE MUST BE MAINTAINED REGULARLY TO PREVENT SEDIMENTATION TRACKING.

Cottage Grove — Where Pride and Prosperity Meet

STANDARD DETAILS
CONSTRUCTION ENTRANCE
ROCK AND WOODCHIP
COTTAGE GROVE, MINNESOTA

JANUARY 2025

PLATE NO. ERO-12

48_ERO12.DWG

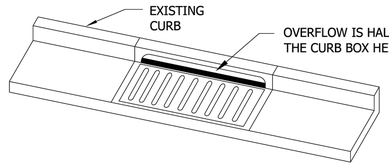


NOTE: USE WIMCO ROAD DRAIN CG-23 OR CG-3290-VB (DEPENDING ON CASTING TYPE) HIGH FLOW INLET PROTECTION CURB AND GUTTER MODELS, OR CITY APPROVED EQUAL.

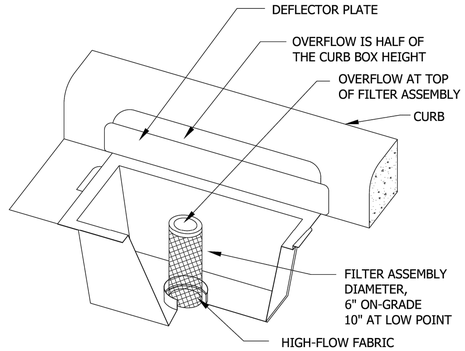


Cottage Grove — Where Pride and Prosperity Meet

STANDARD DETAILS
INLET PROTECTION CATCH BASIN INSERT
COTTAGE GROVE, MINNESOTA

JANUARY 2025

PLATE NO. ERO-9

48_ERO9.DWG

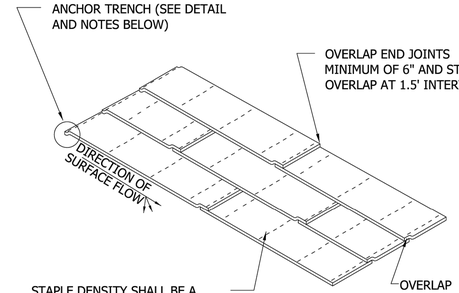


ANCHOR TRENCH
1. DIG 6" X 6" TRENCH
2. LAY BLANKET IN TRENCH
3. STAPLE AT 1.5' INTERVALS
4. BACKFILL WITH NATURAL SOIL AND COMPACT
5. BLANKET LENGTH SHALL NOT EXCEED 100' WITHOUT AN ANCHOR TRENCH

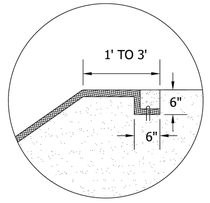


Cottage Grove — Where Pride and Prosperity Meet

STANDARD DETAILS
ROLLED EROSION PREVENTION PRODUCTS INSTALLATION
COTTAGE GROVE, MINNESOTA

JANUARY 2025

PLATE NO. ERO-5

48_ERO5.DWG

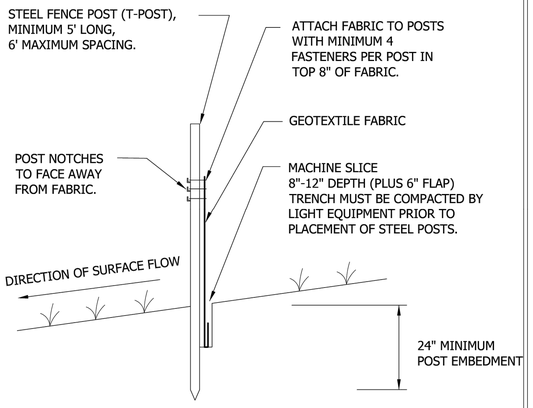


NOTE:
HEAVY-DUTY SILT FENCE INSTALLATION METHODS SHOULD BE USED WHEN DIRECTED BY THE CITY.

Cottage Grove — Where Pride and Prosperity Meet

STANDARD DETAILS
MACHINE SLICED SILT FENCE
COTTAGE GROVE, MINNESOTA

JANUARY 2025

PLATE NO. ERO-1

48_ERO1.DWG

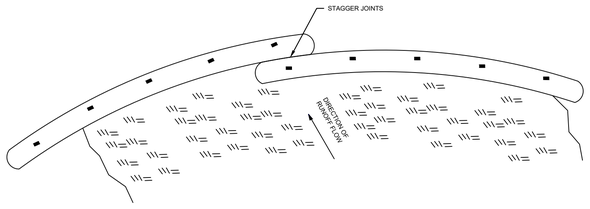


NOTES:
1. STRAW WATTLE SHALL BE COMPACTED STRAW AND/OR ORGANIC FIBER MATERIAL.
2. STRAW OR FIBER SHALL BE WRAPPED IN UV STABILIZED DEGRADABLE TUBULAR POLYPROPYLENE PLASTIC NETTING.

1 **BIO-ROLL**
NO SCALE

PRELIMINARY - NOT FOR CONSTRUCTION

| No. | REVISIONS | DATE | BY |
|---|---|---|---|

Kimley»Horn

© 2026 KIMLEY-HORN AND ASSOCIATES, INC.

11995 SINGLETREE LN, SUITE 225, EDEN PRAIRIE, MN 55344
PHONE: 612-315-1272
WWW.KIMLEY-HORN.COM

I HEREBY CERTIFY THAT THIS PLAN, SPECIFICATION OR REPORT WAS PREPARED BY ME OR UNDER MY DIRECT SUPERVISION AND THAT I AM A DULY LICENSED PROFESSIONAL ENGINEER UNDER THE LAWS OF THE STATE OF MINNESOTA.

BRIAN M. WURDEMAN, P.E.
DATE: 01/28/2026 LIC. NO. 53113 MN

| | |
|---|---|
| KHA PROJECT | 161369000 |
| DATE | 01/28/2026 |
| SCALE | AS SHOWN |
| DESIGNED BY | MTL |
| DRAWN BY | AKK |
| CHECKED BY | BMW |

**EROSION AND SEDIMENT CONTROL DETAILS**

**PANERA - COTTAGE GROVE**
PREPARED FOR
CA COMMERCIAL
COTTAGE GROVE MN

SHEET NUMBER
C302

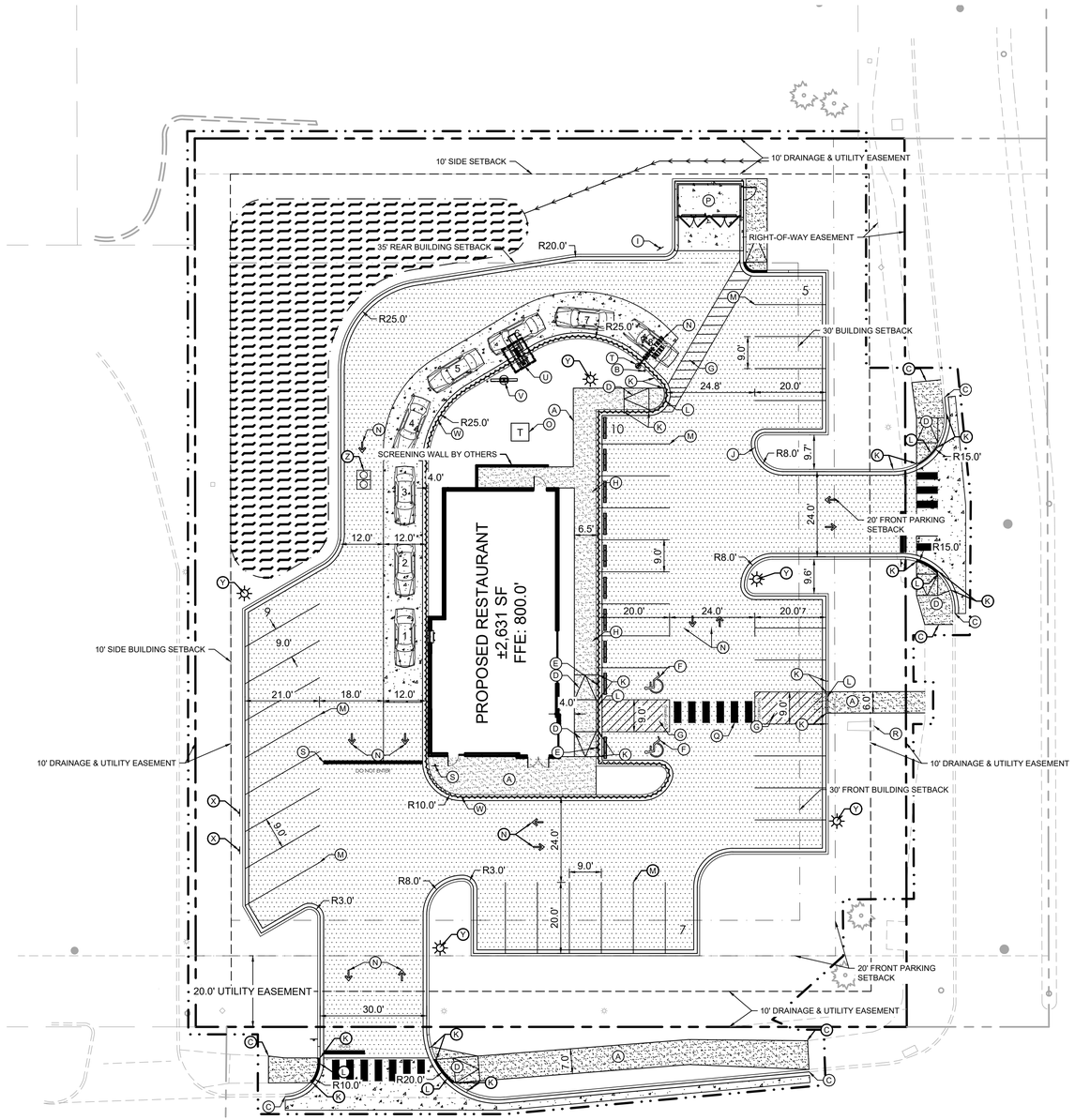


EAST POINT DOUGLAS RD S

## SITE PLAN NOTES

1. REFER TO THE ARCHITECTURAL PLANS FOR EXACT LOCATIONS AND DIMENSIONS OF STOOPS, TRUCK DOCKS, TRASH ENCLOSURES & PRECISE BUILDING DIMENSIONS. REFER TO THE SITE ELECTRICAL PLAN FOR LOCATIONS OF PROPOSED LIGHT POLES, CONDUITS, AND ELECTRICAL EQUIPMENT.
2. REFER TO CERTIFIED SITE SURVEY OR PLAT FOR EXACT LOCATION OF EXISTING EASEMENTS, PROPERTY BOUNDARY DIMENSIONS, AND ADJACENT RIGHT-OF-WAY & PARCEL INFORMATION.
3. DIMENSIONS AND RADII ARE DRAWN TO THE FACE OF CURB, UNLESS OTHERWISE NOTED. DIMENSIONS ARE ROUNDED TO THE NEAREST TENTH FOOT, AND AREAS ARE ROUNDED TO THE NEAREST SQUARE FOOT.
4. UNLESS OTHERWISE NOTED, THE CONTRACTOR SHALL BE RESPONSIBLE FOR RELOCATING EXISTING SITE IMPROVEMENTS THAT CONFLICT WITH THE PROPOSED WORK, INCLUDING BUT NOT LIMITED TO TRAFFIC SIGNS, LIGHT POLES, ABOVEGROUND UTILITIES, ETC. PERFORM WORK IN ACCORDANCE WITH GOVERNING AUTHORITIES REQUIREMENTS AND PROJECT SITE WORK SPECIFICATIONS. COST SHALL BE INCLUDED IN BASE BID.
5. TYPICAL PARKING STALL DIMENSIONS SHALL BE 9.0-FEET IN WIDTH AND 20-FEET IN LENGTH UNLESS OTHERWISE INDICATED.
6. MONUMENT SIGN(S) ARE DETAILED ON THE ARCHITECTURAL PLANS AND ARE SHOWN FOR GRAPHICAL & INFORMATIONAL PURPOSES ONLY. CONTRACTOR TO VERIFY SIGN DIMENSIONS, LOCATION AND REQUIRED PERMITS WITH THE OWNER.

## KEYNOTE LEGEND

| | |
|---|---|
| A | CONCRETE SIDEWALK - SEE DETAIL |
| B | 6" CONCRETE FILLED BOLLARD - SEE DETAIL |
| C | MATCH EXISTING EDGE OF PAVEMENT/ CURB & GUTTER |
| D | ACCESSIBLE CURB RAMP - SEE DETAIL |
| E | ACCESSIBLE PARKING SIGN, SIGN AND POST FURNISHED BY SIGN VENDOR. BOLLARD AND CONCRETE FOUNDATION PROVIDED BY GC |
| F | ACCESSIBLE PARKING SYMBOL - SEE DETAIL |
| G | AREA STRIPED WITH 4" SYSL @ 45° 2' O.C. |
| H | CONCRETE WHEEL STOP, SEE DETAIL |
| I | SITE DIRECTIONAL SIGN (SEE ARCH PLANS FOR DETAILS) |
| J | B612 CURB AND GUTTER (TYP.) - SEE DETAIL |
| K | TRANSITION CURB - SEE DETAIL |
| L | FLUSH CURB - SEE DETAIL |
| M | 4" WIDE PAINTED SOLID LINE, TYP. |
| N | TRAFFIC FLOW PAVEMENT MARKINGS, TYP. (SEE DETAILS) |
| O | PROPOSED TRANSFORMER, CONCRETE PAD, & BOLLARDS (SEE MEP PLANS FOR DETAILS). |
| P | TRASH ENCLOSURE (SEE ARCH PLANS FOR DETAILS) |
| Q | ACCESSIBLE CROSSWALK - SEE DETAIL |
| R | EXISTING PYLON SIGN |
| S | 'DO NOT ENTER' SIGN & STOP BAR - SEE DETAIL |
| T | CLEARANCE BAR (SEE ARCH PLANS FOR DETAILS) |
| U | ORDER POINT CANOPY W/ DIGITAL ORDER SCREEN & BOLLARD @ 7 CAR STACK -- INDICATES 140' FROM CENTER POINT OF DRIVE THRU WINDOW TO ORDER POINT FOOTING & CONDUIT W/ BOLLARD |
| V | 5 PANEL MENU BOARD, FOOTING & CONDUIT |
| W | OUTFALL B612 CURB AND GUTTER (TYP.) - SEE DETAIL |
| X | DRIVE THRU PULL FORWARD PARKING SIGNS - REFER TO ARCH PLANS |
| Y | PROPOSED LIGHT POLE - REFER TO ARCH PLANS |
| Z | GREASE INTERCEPTOR - REFER TO MEP PLANS |

## LEGEND

- PROPERTY LINE
- SETBACK LINE
- DRAINAGE AND UTILITY EASEMENT
- PROPOSED CURB AND GUTTER
- PROPOSED OUTFALL CURB AND GUTTER
- STANDARD DUTY ASPHALT PAVMENT — SEE DETAILS FOR SECTION
- HEAVY DUTY CONCRETE PAVEMENT — SEE DETAILS FOR SECTION
- STANDARD DUTY CONCRETE PAVEMENT / SIDEWALK — SEE DETAILS FOR SECTION
- STORM WATER AREA — SEE GRADING PLAN FOR DETAILS

## PROPERTY SUMMARY

| | |
|---|---|
| TOTAL PROPERTY AREA | 1.15 AC / 50,094 SF |
| DISTURBED AREA | 1.25 AC / 54,269 SF |
| EXISTING IMPERVIOUS AREA | 0.79 AC / 33,483 SF / 67.00% |
| EXISTING PERVIOUS AREA | 0.36 AC / 16,493 SF / 33.00% |
| PROPOSED IMPERVIOUS AREA | 0.63 AC / 27,476 SF / 54.85% |
| PROPOSED PERVIOUS AREA/GREEN SPACE | 0.52 AC / 22,468 SF / 45.15% |
| NET DECREASE IN IMPERVIOUS AREA | 0.14 AC / 6,007 SF |

## SITE DATA

| | |
|---|---|
| EXISTING ZONING | MU - MIXED USE |
| PROPOSED ZONING | MU - MIXED USE |
| PROPOSED LAND USE | RESTAURANT |
| PARKING SETBACKS | FRONT= 20'<br>SIDE = NOT PERMITTED<br>REAR = 35' |
| BUILDING SETBACKS | FRONT = 30'<br>SIDE = 10' (30' ADJACENT TO STREET)<br>REAR = 35' |

## BUILDING DATA

| | |
|---|---|
| TOTAL BUILDING AREA | 2,631 SF |
| PERCENT OF TOTAL PROPERTY AREA | 5.19% |
| MAXIMUM BUILDING HEIGHT | 40 FT |
| MAXIMUM COVERAGE | 70% |

## PARKING SUMMARY

| | |
|---|---|
| REQUIRED PARKING | 20 SPACES<br>@ 1 PER EACH 3 SEATS (60 TOTAL) + EACH EMPLOYEE (8 TOTAL) |
| REQUIRED VEHICLE STACKING | 6 SPACE |
| TOTAL PROPOSED PARKING | 38 SPACES |
| REQUIRED ACCESSIBLE PARKING | 2 STANDARD SPACES<br>1 VAN ACCESSIBLE |
| PROPOSED ACCESSIBLE PARKING | 2 STANDARD SPACES<br>1 VAN ACCESSIBLE |

GRAPHIC SCALE IN FEET
0 10 20 40

Know what's **below.** **Call** before you dig.

PRELIMINARY - NOT FOR CONSTRUCTION

| No. | REVISIONS | DATE | BY |
|---|---|---|---|

Kimley»Horn
© 2026 KIMLEY-HORN AND ASSOCIATES, INC.
11995 SINGLETREE LN, SUITE 225, EDEN PRAIRIE, MN 55344
PHONE: 612-315-1272
WWW.KIMLEY-HORN.COM

I HEREBY CERTIFY THAT THIS PLAN, SPECIFICATION OR REPORT WAS PREPARED BY ME OR UNDER MY DIRECT SUPERVISION AND THAT I AM A DULY LICENSED PROFESSIONAL ENGINEER UNDER THE LAWS OF THE STATE OF MINNESOTA.

BRIAN M. WURDEMAN, P.E. | MN | LIC. NO. 53113 | DATE: 01/26/2026

| | | | |
|---|---|---|---|
| KHA PROJECT | 161369000 | | |
| DATE | 01/26/2026 | | |
| SCALE | AS SHOWN | DESIGNED BY | MTL |
| | | DRAWN BY | AKK |
| | | CHECKED BY | BMW |

# SITE DIMENSION PLAN

**PANERA - COTTAGE GROVE**
PREPARED FOR
**CA COMMERCIAL**
COTTAGE GROVE MN

SHEET NUMBER
**C400**

K:\TCW_LDEV\ca commercial\cottage grove, mn\3 Design\CAD\plansheets\C4-SITE PLAN.dwg February 17, 2026 - 2:21pm
This document, together with the concepts and designs presented herein, as an instrument of service, is intended only for the specific purpose and client for which it was prepared. Reuse of and improper reliance on this document without written authorization and adaptation by Kimley-Horn and Associates, Inc. shall be without liability to Kimley-Horn and Associates, Inc.

This document, together with the concepts and designs presented herein, as an instrument of service, is intended only for the specific purpose and client for which it was prepared. Reuse of and improper reliance on this document without written authorization and adaptation by Kimley-Horn and Associates, Inc. shall be without liability to Kimley-Horn and Associates, Inc.

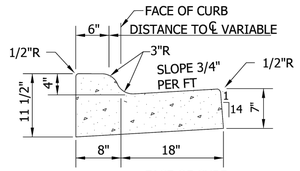


MNDOT B418 MOD

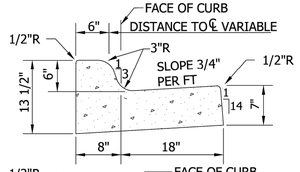


MNDOT B618 MOD

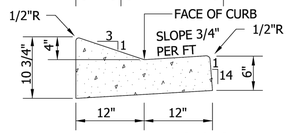


SURMOUNTABLE D-412 MOD

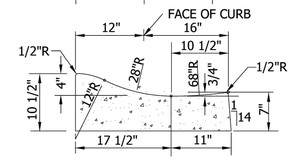


SURMOUNTABLE D-428 MOD

Cottage Grove
Where Pride and Prosperity Meet

STANDARD DETAILS
CURB AND GUTTER
COTTAGE GROVE, MINNESOTA

JANUARY 2025

PLATE NO.
STR-10

48_STR10.DWG

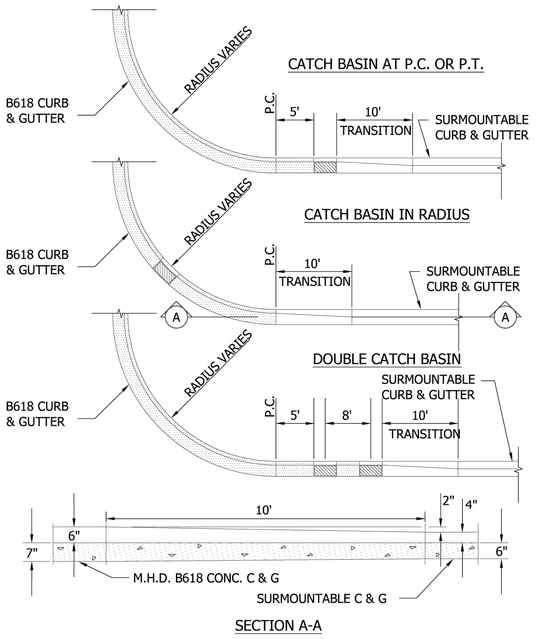


SECTION A-A

Cottage Grove
Where Pride and Prosperity Meet

STANDARD DETAILS
CONCRETE CURB AND GUTTER TRANSITION
COTTAGE GROVE, MINNESOTA

JANUARY 2025

PLATE NO.
STR-12

48_STR12.DWG

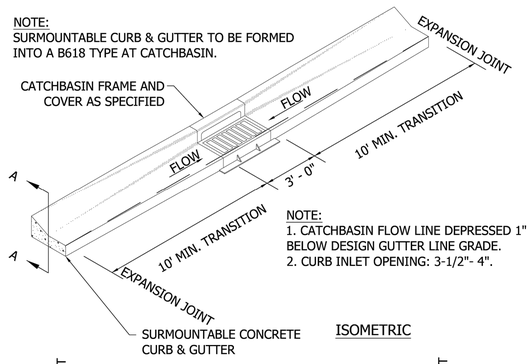


ISOMETRIC

NOTE:
1. CATCHBASIN FLOW LINE DEPRESSED 1" BELOW DESIGN GUTTER LINE GRADE.
2. CURB INLET OPENING: 3-1/2"- 4".

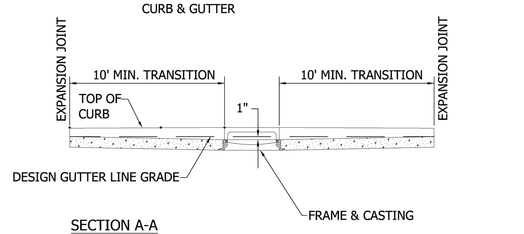


SECTION A-A

Cottage Grove
Where Pride and Prosperity Meet

STANDARD DETAILS
SURMOUNTABLE CURB AND GUTTER CONSTRUCTION AT CATCHBASIN
COTTAGE GROVE, MINNESOTA

JANUARY 2025

PLATE NO.
STR-13

48_STR13.DWG

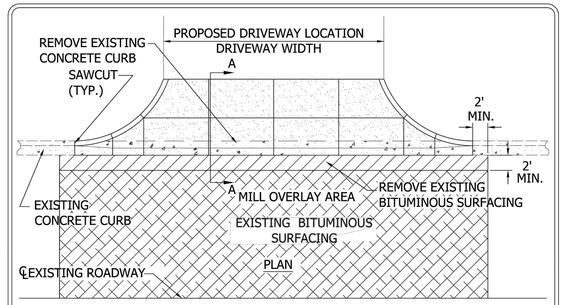


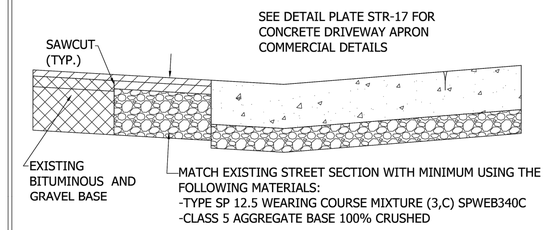


SECTION A-A

NOTES:
1. CITY RIGHT-OF-WAY PERMIT IS REQUIRED PRIOR TO CONSTRUCTION.
2. FOR MATERIAL SPECIFICATION, REFER TO RIGHT-OF-WAY PERMIT.

Cottage Grove
Where Pride and Prosperity Meet

STANDARD DETAILS
CONCRETE COMMERCIAL DRIVEWAY APRON OR CURB AND GUTTER CONNECT TO EXISTING STREET
COTTAGE GROVE, MINNESOTA

JANUARY 2025

PLATE NO.
STR-21

48_STR21.DWG

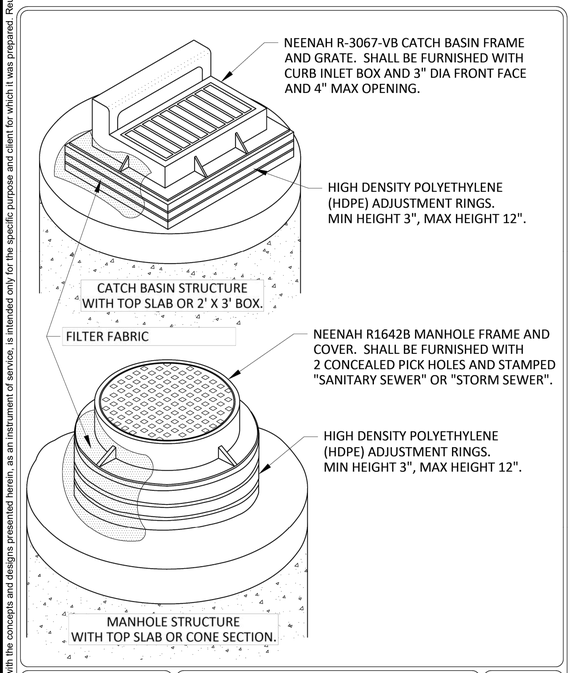


Cottage Grove
Where Pride and Prosperity Meet

STANDARD DETAILS
CATCHBASIN AND MANHOLE ADJUSTMENT
COTTAGE GROVE, MINNESOTA

JANUARY 2025

PLATE NO.
STR-23

48_STR23.DWG

PRELIMINARY - NOT FOR CONSTRUCTION

| No. | REVISIONS | DATE | BY |
|---|---|---|---|

Kimley»Horn

© 2026 KIMLEY-HORN AND ASSOCIATES, INC.

11995 SINGLETREE LN. SUITE 225, EDEN PRAIRIE, MN 55344
PHONE: 612-315-1272
WWW.KIMLEY-HORN.COM

I HEREBY CERTIFY THAT THIS PLAN, SPECIFICATION OR REPORT WAS PREPARED BY ME OR UNDER MY DIRECT SUPERVISION AND THAT I AM A DULY LICENSED PROFESSIONAL ENGINEER UNDER THE LAWS OF THE STATE OF MINNESOTA.

BRIAN M. WURDEMAN, P.E.
MN LIC. NO. 53113
DATE: 01/26/2026

| | |
|---|---|
| KHA PROJECT | 161369000 |
| DATE | 01/26/2026 |
| SCALE | AS SHOWN |
| DESIGNED BY | ARF |
| DRAWN BY | AKK |
| CHECKED BY | MTL |

# SITE DETAILS

PANERA - COTTAGE GROVE
PREPARED FOR
CA COMMERCIAL
COTTAGE GROVE MN

SHEET NUMBER
C401

K:\TCW_LDEV\ca commercial\cottage grove, mn\3 Design\CAD\plansheets\C4-SITE DETAILS.dwg February 17, 2026 - 2:21pm

K:\TCW_LDEV\ca commercial\cottage grove, mn\3 Design\CAD\plansheets\C4-SITE DETAILS.dwg February 17, 2026 - 2:21pm

This document, together with the concepts and designs presented herein, as an instrument of service, is intended only for the specific purpose and client for which it was prepared. Reuse of and improper reliance on this document without written authorization and adaptation by Kimley-Horn and Associates, Inc. shall be without liability to Kimley-Horn and Associates, Inc.

PAVEMENT SECTIONS SHOWN ARE PROVIDED AS A REFERENCE ONLY. REFER TO GEOTECHNICAL REPORT FOR ALL PAVEMENT, SUBGRADE PREPARATION AND COMPACTION REQUIREMENTS.

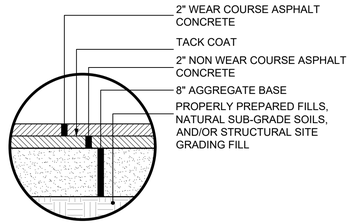


## 1 STANDARD DUTY ASPHALT PAVMENT SECTION

NO SCALE

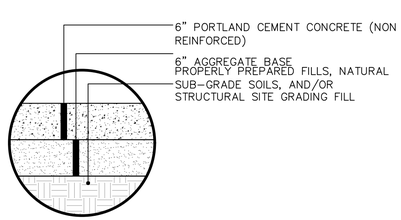


## 2 STANDARD DUTY CONCRETE PAVMENT SECTION

NO SCALE

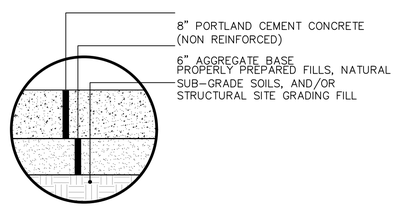


## 3 HEAVY DUTY CONCRETE PAVMENT SECTION

3

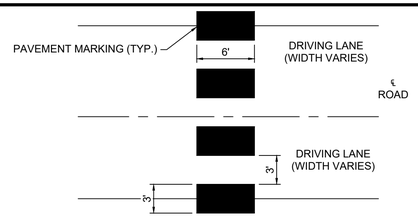


NOTE:
1. TAPED AREAS TO BE CENTERED AND ALIGNED ON CENTER LINE AND LANE LINES. MAKE ADJUSTMENTS IN CENTER MEDIAN AREA.
2. ZEBRA CROSSWALKS SHALL BE WHITE POLYMER-PREFORMED TAPE OR AN ACCEPTABLE EQUALIVANT APPROVED BY THE ENGINEER.
3. A MINIMUM OF 1.5 FT. CLEAR DISTANCE MUST BE LEFT ADJACENT TO CURB. IF LAST STRIPED AREA FALLS INTO THIS DISTANCE, IT MUST BE OMITTED.
4. REMOVE ALL CONFLICTING PAVEMENT MARKINGS AS DIRECTED BY THE ENGINEER.
5. AT SKEWED CROSSWALKS, THE TAPED AREAS ARE TO REMAIN PARALLEL TO THE LANE LINES.
6. WHERE PAVEMENT MARKINGS CAN NOT BE INLAYED INTO THE HOT MAT, PAVEMENT SHALL BE GROOVED FOR THE INSTALLATION OF THE POLYMER-PREFORMED MARKINGS. SEE Mn/DOT STANDARD SPECIFICATION 2564.

## 4 CROSSWALK STRIPING

NTS

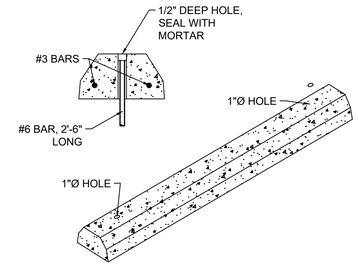


## 5 PRECAST WHEEL STOP

NTS

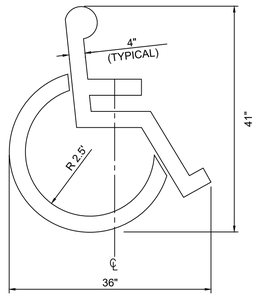


## 6 ACCESSIBLE PARKING SYMBOL

NO SCALE

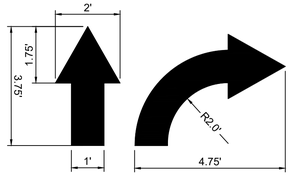


NOTE: ALL TRAFFIC FLOW ARROWS TO BE SOLID WHITE REFLECTIVE TRAFFIC PAINT AS PER DIMENSIONS ABOVE

## 7 TRAFFIC ARROW

NO SCALE

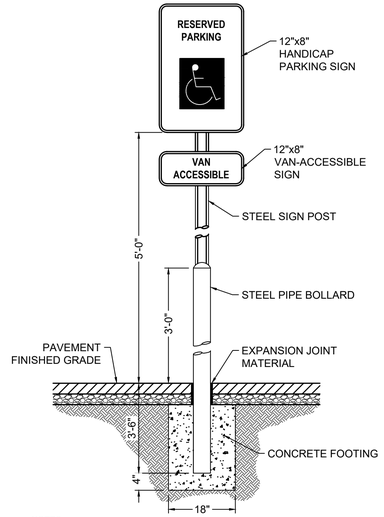


**NOTES:**
1. SIGNS SHALL BE 18 GAUGE STEEL, WITH BAKED ENAMEL WHITE LETTERS AND BORDER ON BLUE BACKGROUND, WHERE APPLICABLE.
2. POST SHALL BE 3"x3" 11-GAUGE GALVANIZED SQUARE STEEL
3. BOLLARD SHALL BE 6"Ø SCH-40 STEEL PIPE FILLED WITH CONCRETE & PAINTED YELLOW
4. SIGNS SHALL COMPLY WITH LOCAL MUTCD REQUIREMENTS

## 8 ACCESSIBLE PARKING SIGN IN BOLLARD

NO SCALE

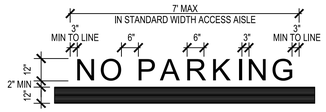


NOTE:
1. LETTERING SHALL BE 12" HIGH, 6" WIDE, 2" THICK, SPACED 3" APART, OR AS APPROVED BY OWNER.
2. NOTIFY ENGINEER OF STENCIL BEING USED AND SUBMIT LAYOUT FOR APPROVAL.

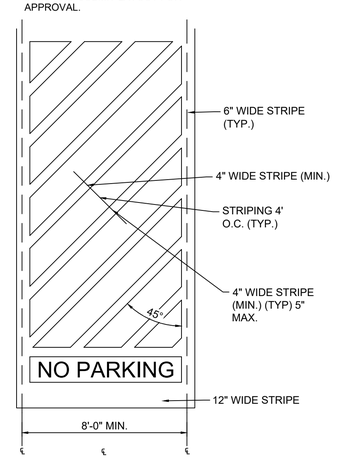


NOTE: IS DIMENSION SHOWN ON SITE PLAN

## 9 ACCESS AISLE STRIPING LAYOUT

NO SCALE

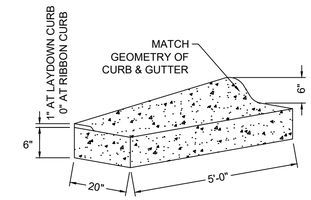


**NOTES:**
1. REFER TO CONCRETE CURB & GUTTER DETAIL FOR SPECIFICATIONS AND AGGREGATE BASE COURSE DIMENSIONS

## 10 CONCRETE CURB TAPER

NO SCALE

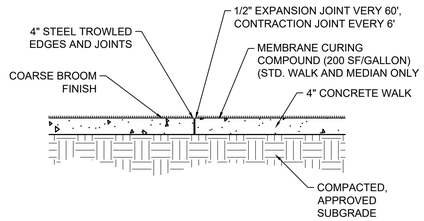


**NOTES:**
1. ALL EXCAVATION, COMPACTION AND BACKFILL INCIDENTAL TO UNIT PRICE BID FOR 4" SIDEWALK

## 11 CONCRETE SIDEWALK

NO SCALE

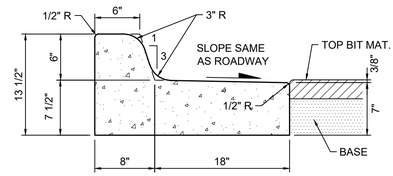


## 12 B618 CURB & GUTTER (OUTFALL)

NO SCALE

PRELIMINARY - NOT FOR CONSTRUCTION

| No. | REVISIONS | DATE | BY |
|---|---|---|---|
| | | | |

Kimley»Horn
© 2026 KIMLEY-HORN AND ASSOCIATES, INC.
11995 SINGLETREE LN, SUITE 225, EDEN PRAIRIE, MN 55344
PHONE: 612-315-1272
WWW.KIMLEY-HORN.COM

I HEREBY CERTIFY THAT THIS PLAN, SPECIFICATION OR REPORT WAS PREPARED BY ME OR UNDER MY DIRECT SUPERVISION AND THAT I AM A DULY LICENSED PROFESSIONAL ENGINEER UNDER THE LAWS OF THE STATE OF MINNESOTA.

BRIAN M. WURDEMAN, P.E.
MN
LIC. NO. 53113
DATE: 01/28/2026

| KHA PROJECT | |
|---|---|
| 161369000 | |
| DATE | |
| 01/28/2026 | |
| SCALE | AS SHOWN |
| DESIGNED BY | MTL |
| DRAWN BY | AKK |
| CHECKED BY | BMW |

# SITE DETAILS

**PANERA - COTTAGE GROVE**
PREPARED FOR
**CA COMMERCIAL**
COTTAGE GROVE MN

SHEET NUMBER
**C402**

K:\TCW_LDEV\ca commercial\cottage grove, mn\3 Design\CAD\plansheets\C5-GRADING PLAN.dwg February 17, 2026 - 2:27pm
This document, together with the concepts and designs presented herein, as an instrument of service, is intended only for the specific purpose and client for which it was prepared. Reuse of and improper reliance on this document without written authorization and adaptation by Kimley-Horn and Associates, Inc. shall be without liability to Kimley-Horn and Associates, Inc.

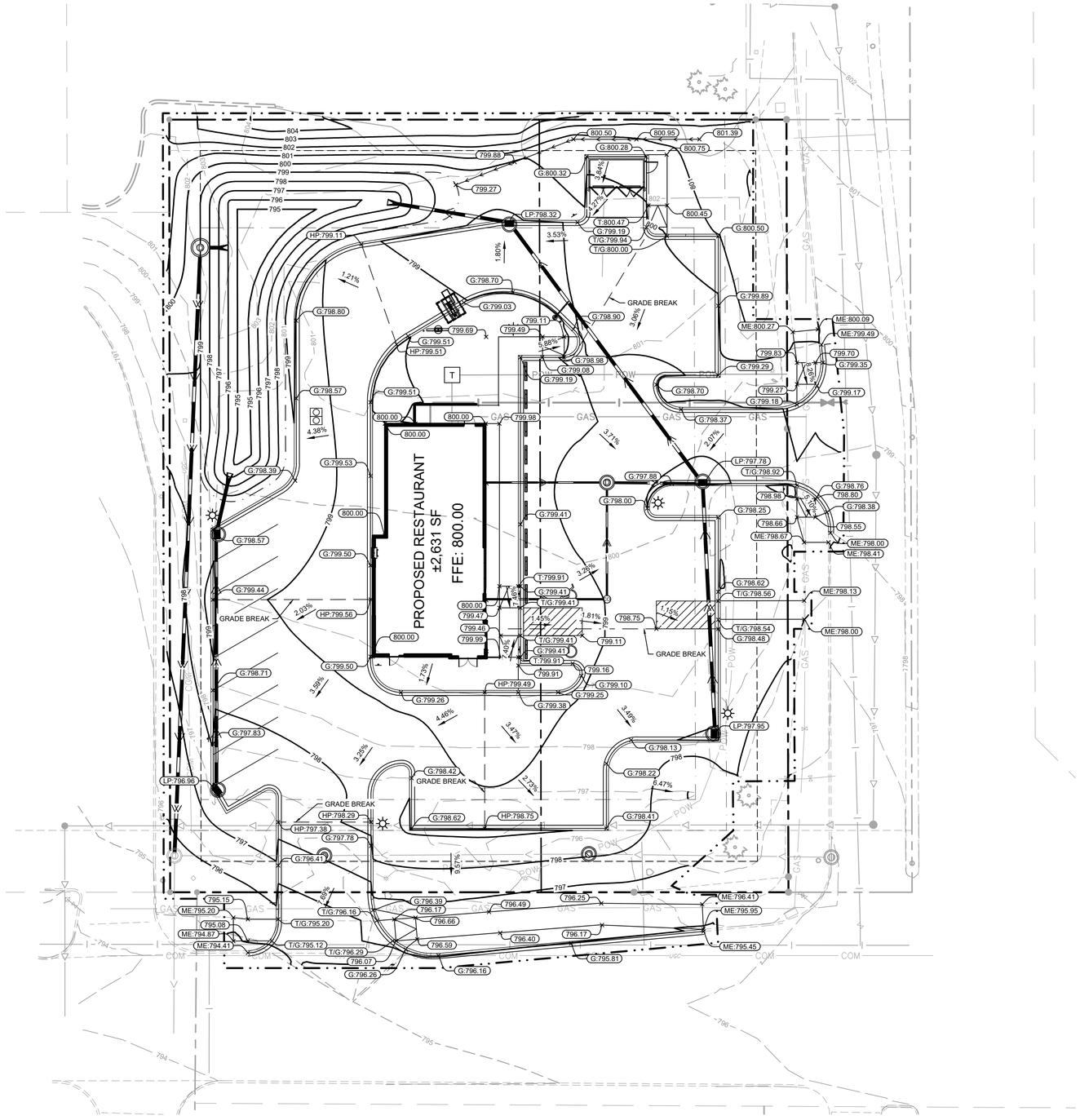


## LEGEND

| | |
|---|---|
| | PROPERTY LINE |
| 928 | EXISTING CONTOUR |
| 925 | PROPOSED CONTOUR |
| | PROPOSED RIDGE LINE |
| | PROPOSED SWALE |
| 100.00 | PROPOSED SPOT ELEVATION |
| HP:0.0 | PROPOSED HIGH POINT ELEVATION |
| LP:0.0 | PROPOSED LOW POINT ELEVATION |
| G:0.00 | PROPOSED GUTTER ELEVATION |
| T:0.00 | PROPOSED TOP OF CURB ELEVATION |
| T/G:0.0 | PROPOSED FLUSH PAVEMENT ELEVATION |
| ME:0.0 | MATCH EXISTING ELEVATION |
| EOF:0.0 | PROPOSED EMERGENCY OVERFLOW ELEVATION |
| TW:0.0<br>BW:0.0 | PROPOSED GRADE AT TOP/BOTTOM OF WALL |
| 0.0% | PROPOSED DRAINAGE DIRECTION |
| 0.00% | PROPOSED GRADE BETWEEN POINTS |

## GRADING PLAN NOTES

1. PERFORM GRADING WORK IN ACCORDANCE WITH APPLICABLE CITY SPECIFICATIONS AND BUILDING PERMIT REQUIREMENTS.
2. CONTACT STATE 811 CALL-BEFORE-YOU-DIG LOCATING SERVICE AT LEAST TWO WORKING DAYS PRIOR TO EXCAVATION FOR UNDERGROUND UTILITY LOCATIONS.
3. CONTRACTOR SHALL BE RESPONSIBLE FOR ALL HORIZONTAL AND VERTICAL CONTROL.
4. FIELD VERIFY THE LOCATIONS AND ELEVATIONS OF EXISTING UTILITIES AND TOPOGRAPHIC FEATURES PRIOR TO THE START OF LAND DISTURBING ACTIVITIES. NOTIFY THE PROJECT ENGINEER OF ANY DISCREPANCIES OR VARIATIONS IMPACTING THE PROPOSED DESIGN OF THE PROJECT.
5. IN PAVED AREAS, ROUGH GRADE TO SUBGRADE ELEVATION AND LEAVE THE SITE READY FOR SUB-BASE.
6. SUBGRADE EXCAVATION SHALL BE BACKFILLED IMMEDIATELY AFTER EXCAVATION TO HELP OFFSET ANY STABILITY PROBLEMS DUE TO WATER SEEPAGE OR STEEP SLOPES. WHEN PLACING NEW SURFACE MATERIAL ADJACENT TO EXISTING PAVEMENT, THE EXCAVATION SHALL BE BACKFILLED PROMPTLY TO AVOID UNDERMINING OF EXISTING PAVEMENT.
7. ELEVATIONS SHOWN REPRESENT FINISHED SURFACE GRADES. SPOT ELEVATIONS ALONG CURB & GUTTER REPRESENT THE FLOW LINE UNLESS OTHERWISE NOTED
8. EXCESS MATERIAL, BITUMINOUS SURFACING, CONCRETE ITEMS, ABANDONED UTILITY ITEMS, AND OTHER UNSTABLE MATERIALS SHALL BECOME THE PROPERTY OF THE CONTRACTOR AND SHALL BE DISPOSED OF OFF THE CONSTRUCTION SITE.
9. CONTRACTOR IS RESPONSIBLE FOR CONSTRUCTION OF PAVEMENTS AND CURB AND GUTTER WITH SMOOTH UNIFORM SLOPES THAT PROVIDE POSITIVE DRAINAGE TO COLLECTION POINTS. MAINTAIN A MINIMUM SLOPE OF 1.25% IN ASPHALT PAVEMENT AREAS AND A MINIMUM SLOPE OF 0.50% IN CONCRETE PAVEMENT AREAS.
10. MAINTAIN A MINIMUM SLOPE OF 0.50% ALONG CURB & GUTTER. REVIEW PAVEMENT GRADIENT AND CONSTRUCT "INFALL" CURB WHERE PAVEMENT DRAINS TOWARD THE GUTTER, AND "OUTFALL" CURB WHERE PAVEMENT DRAINS AWAY FROM THE GUTTER.
11. INSTALL A MINIMUM OF 4-INCHES OF AGGREGATE BASE MATERIAL UNDER PROPOSED CONCRETE CURB & GUTTER, SIDEWALKS, AND TRAILS UNLESS OTHERWISE DETAILED.
12. GRADING FOR SIDEWALKS AND ACCESSIBLE ROUTES, INCLUDING CROSSING DRIVEWAYS, SHALL CONFORM TO CURRENT STATE & NATIONAL ADA STANDARDS:

    ACCESSIBLE RAMP SLOPES SHALL NOT EXCEED 8.3% (1:12).
    SIDEWALK CROSS-SLOPES SHALL NOT EXCEED 2.0%.
    LONGITUDINAL SIDEWALK SLOPES SHALL NOT EXCEED 5.0%.
    ACCESSIBLE PARKING STALLS AND ACCESS AISLES SHALL NOT EXCEED 2.0% IN ANY DIRECTION. A MAXIMUM SLOPE OF 1.50% IS PREFERRED.

    SIDEWALK ACCESS TO EXTERNAL BUILDING DOORS AND GATES SHALL BE ADA COMPLIANT. NOTIFY ENGINEER IMMEDIATELY IF ADA CRITERIA CANNOT BE MET IN ANY LOCATION PRIOR TO PAVEMENT INSTALLATION. CHANGE ORDERS WILL NOT BE ACCEPTED FOR ADA COMPLIANCE ISSUES.
13. UPON COMPLETION OF LAND DISTURBING ACTIVITIES, RESTORE ADJACENT OFFSITE AREAS DISTURBED BY CONSTRUCTION TO MATCH OR EXCEED THE ORIGINAL CONDITION. LANDSCAPE AREAS SHALL BE RE-VEGETATED WITH A MINIMUM OF 4-INCHES OF TOPSOIL.
14. EXCAVATE DRAINAGE TRENCHES TO FOLLOW PROPOSED STORM SEWER ALIGNMENTS. REFER TO THE UTILITY PLANS FOR LAYOUT AND ELEVATIONS FOR PROPOSED SANITARY SEWER, WATER MAIN, AND OTHER BUILDING UTILITY SERVICE CONNECTIONS.

NORTH

GRAPHIC SCALE IN FEET
0 10 20 40

811 Know what's **below.** **Call** before you dig.

PRELIMINARY - NOT FOR CONSTRUCTION

| No. | REVISIONS | DATE | BY |
|---|---|---|---|

Kimley»Horn
© 2026 KIMLEY-HORN AND ASSOCIATES, INC.
11995 SINGLETREE LN, SUITE 225, EDEN PRAIRIE, MN 55344
PHONE: 612-315-1272
WWW.KIMLEY-HORN.COM

I HEREBY CERTIFY THAT THIS PLAN, SPECIFICATION OR REPORT WAS PREPARED BY ME OR UNDER MY DIRECT SUPERVISION AND THAT I AM A DULY LICENSED PROFESSIONAL ENGINEER UNDER THE LAWS OF THE STATE OF MINNESOTA.

BRIAN M. WURDEMAN, P.E.
DATE: 01/26/2026 | MN LIC. NO. 53113

| | |
|---|---|
| KHA PROJECT | 161369000 |
| DATE | 01/26/2026 |
| SCALE | AS SHOWN |
| DESIGNED BY | MTL |
| DRAWN BY | AKK |
| CHECKED BY | BMW |

# GRADING PLAN

**PANERA - COTTAGE GROVE**
PREPARED FOR
**CA COMMERCIAL**
COTTAGE GROVE | MN

SHEET NUMBER
**C500**

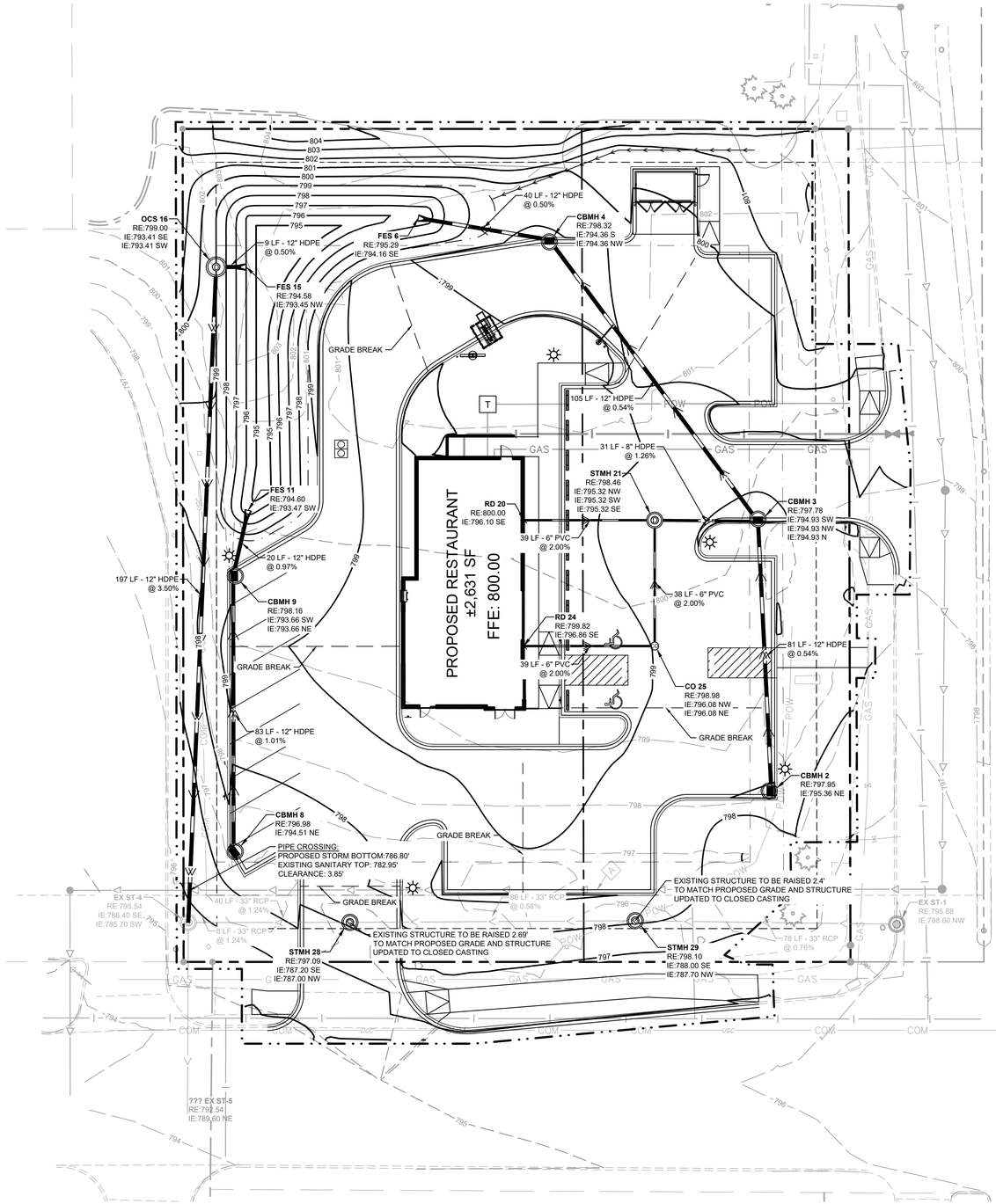


## LEGEND

- PROPERTY LINE
- EXISTING CONTOUR
- PROPOSED CONTOUR
- PROPOSED RIDGE LINE
- PROPOSED SWALE
- PROPOSED STORM MANHOLE (SOLID CASTING)
- PROPOSED STORM MANHOLE (ROUND INLET CASTING)
- PROPOSED STORM MANHOLE/ CATCH BASIN (CURB INLET CASTING)
- PROPOSED STORM SEWER CLENOUT
- PROPOSED FLARED END SECTION
- PROPOSED RIPRAP
- PROPOSED STORM SEWER

## FILTRATION BMP NOTES

1. TO THE EXTENT PRACTICABLE, LIMIT USE OF HEAVY CONSTRUCTION EQUIPMENT WITHIN THE BOUNDARIES OF THE PROPOSED INFILTRATION BMP. UTILIZE AN EXCAVATOR WITH A TOOTHED BUCKET TO AVOID COMPACTING OR SMEARING OF SOILS.
2. AFTER INITIAL EXCAVATION AND ROUGH GRADING, PROVIDE A MINIMUM OF TWO (2) DOUBLE RING INFILTROMETER TESTS WITHIN THE INFILTRATION AREA AT THE ELEVATION OF THE BASIN BOTTOM. PROVIDE THE RESULTS TO THE ENGINEER OF RECORD FOR REVIEW AND APPROVAL PRIOR TO COMPLETING INSTALLATION OF THE BASIN OR UNDERGROUND SYSTEM.
3. IF CLAY SOILS ARE ENCOUNTERED, OVER-EXCAVATE AS NECESSARY TO REACH NATIVE SANDY/SILTY SOIL. BACKFILL THE ADDITIONAL EXCAVATION WITH SUITABLE ENGINEERED FILL MATERIAL.
4. IF NATIVE SUBGRADE SOILS AT THE BOTTOM OF THE PROPOSED INFILTRATION AREA ARE DETERMINED TO NOT BE CONDUCIVE TO THE DESIGN INFILTRATION REQUIREMENTS, REMOVE AND REPLACE THE POORLY INFILTRATION SOILS TO A DEPTH WHERE THE EXISTING NATIVE SUBGRADE SOILS MEET OR EXCEED THE DESIGN INFILTRATION REQUIREMENTS AS REVIEWED BY THE ENGINEER.
5. FINAL EXCAVATION OF THE INFILTRATION AREA AND INSTALLATION OF ANY ENGINEERED SOIL MUST OCCUR IN DRY CONDITIONS TO PREVENT SMEARING AND COMPACTION.
6. REMOVE ANY EXCESS SOILS THAT ENTER THE INFILTRATION BASIN PRIOR TO FINAL STABILIZATION.
7. UPON COMPLETION OF THE INFILTRATION/FILTRATION SYSTEM INSTALLATION AND FINAL STABILIZATION OF THE TRIBUTARY AREA, PROVIDE DOCUMENTATION THAT THE BMP DRAINS DOWN WITHIN 48 HOURS.

## STORM SEWER NOTES

1. INSTALL STORM SEWER IN ACCORDANCE WITH APPLICABLE CITY OR STATE SPECIFICATIONS, STATE PLUMBING CODE, AND BUILDING PERMIT REQUIREMENTS.
2. CONTACT STATE 811 CALL-BEFORE-YOU-DIG LOCATING SERVICE AT LEAST TWO WORKING DAYS PRIOR TO EXCAVATION FOR UNDERGROUND UTILITY LOCATIONS.
3. STORM SEWER PIPE SHALL BE AS FOLLOWS:
   RCP: ASTM C-76
   HDPE: ASTM F-714, F-894
   PVC: ASTM D-2729
   PVC SCH40: ASTM D-1785, D-2665, F-794
   DRAIN TILE SHALL BE AS FOLLOWS:
   PE: ASTM F-6667
   PVC: ASTM D-2729
   FITTINGS SHALL BE AS FOLLOWS:
   RCP: ASTM C-76, JOINTS PER ASTM C-361, C-990, AND C-443
   HDPE: ASTM D-3212
   PVC: ASTM D-2729, JOINTS PER ASTM D-3212
   PVC SCH40: ASTM D-2665, F-794, F-1866
4. CONTRACTOR IS RESPONSIBLE FOR ALL HORIZONTAL AND VERTICAL CONTROL.
5. FIELD VERIFY THE LOCATIONS AND ELEVATIONS OF EXISTING UTILITIES AND TOPOGRAPHIC FEATURES PRIOR TO THE START OF LAND DISTURBING ACTIVITIES. NOTIFY THE PROJECT ENGINEER OF ANY DISCREPANCIES OR VARIATIONS IMPACTING THE PROPOSED DESIGN OF THE PROJECT.
6. EXCAVATE DRAINAGE TRENCHES TO FOLLOW PROPOSED STORM SEWER ALIGNMENTS. REFER TO THE UTILITY PLANS FOR LAYOUT AND ELEVATIONS FOR PROPOSED SANITARY SEWER, WATER MAIN, AND OTHER BUILDING UTILITY SERVICE CONNECTIONS. REFER TO THE GRADING PLAN FOR DETAILED SURFACE ELEVATIONS.
7. EXCESS MATERIAL, BITUMINOUS SURFACING, CONCRETE ITEMS, ABANDONED UTILITY ITEMS, AND OTHER UNSTABLE MATERIALS SHALL BECOME THE PROPERTY OF THE CONTRACTOR AND SHALL BE DISPOSED OF OFF THE CONSTRUCTION SITE.
8. COORDINATE WITH THE PLUMBING PLANS FOR THE LOCATION, SIZE AND ELEVATION OF THE PROPOSED UNDERGROUND ROOF DRAIN CONNECTIONS.
9. WHERE STORM SEWER ROOF DRAINS HAVE LESS THAN 4-FEET OF COVER IN PAVED AREAS OR 3-FEET OF COVER IN LANDSCAPE AREAS, PROVIDE 3-INCH THICK INSULATION A MINIMUM OF 5-FEET IN WIDTH, CENTERED ON THE PIPE.
10. ALL STORM SEWER PIPE JOINTS SHALL BE WATER-TIGHT CONNECTIONS.
11. ALL STORM SEWER PIPE CONNECTIONS TO MANHOLES SHALL BE GASKETED AND WATER TIGHT. BOOTED COUPLERS AT THE STRUCTURE OR A WATER STOP WITH NON-SHRINK GROUT MAY BE USED IN ACCORDANCE WITH LOCAL CODES.
12. CONTRACTOR SHALL AIR TEST ALL STORM SEWER PIPE IN ACCORDANCE WITH LOCAL CODE REQUIREMENTS.

NORTH

GRAPHIC SCALE IN FEET
0 10 20 40

Know what's below. Call before you dig.

PRELIMINARY - NOT FOR CONSTRUCTION

| No. | REVISIONS | DATE | BY |
|---|---|---|---|

Kimley»Horn
© 2026 KIMLEY-HORN AND ASSOCIATES, INC.
11995 SINGLETREE LN, SUITE 225, EDEN PRAIRIE, MN 55344
PHONE: 612-315-1272
WWW.KIMLEY-HORN.COM

I HEREBY CERTIFY THAT THIS PLAN, SPECIFICATION OR REPORT WAS PREPARED BY ME OR UNDER MY DIRECT SUPERVISION AND THAT I AM A DULY LICENSED PROFESSIONAL ENGINEER UNDER THE LAWS OF THE STATE OF MINNESOTA.

BRIAN M. WURDEMAN, P.E.
DATE: 01/26/2026 LIC. NO. 53113 MN

| | |
|---|---|
| KHA PROJECT | 161369000 |
| DATE | 01/26/2026 |
| SCALE | AS SHOWN |
| DESIGNED BY | ARF |
| DRAWN BY | AKK |
| CHECKED BY | MTL |

# STORM SEWER PLAN

PANERA - COTTAGE GROVE
PREPARED FOR
CA COMMERCIAL
COTTAGE GROVE MN

SHEET NUMBER
C501

K:\TCW_LDEV\ca commercial\cottage grove, mn\3 Design\CAD\plansheets\C5-STORM PLAN.dwg February 17, 2026 - 2:21pm
This document, together with the concepts and designs presented herein, as an instrument of service, is intended only for the specific purpose and client for which it was prepared. Reuse of and improper reliance on this document without written authorization and adaptation by Kimley-Horn and Associates, Inc. shall be without liability to Kimley-Horn and Associates, Inc.

Reuse of and improper reliance on this document without written authorization and adaptation by Kimley-Horn and Associates, Inc. shall be without liability to Kimley-Horn and Associates, Inc.

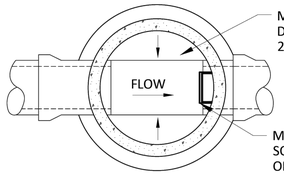


MORTAR BOTTOM OF MANHOLE TO 1/2 DIAMETER AT PIPE AND SLOPE MORTAR 2" TOWARD INVERT.

MANHOLE STEPS SHALL BE PLACED SO THAT OFFSET VERTICAL PORTION OF CONE IS FACING DOWNSTREAM.

PLAN

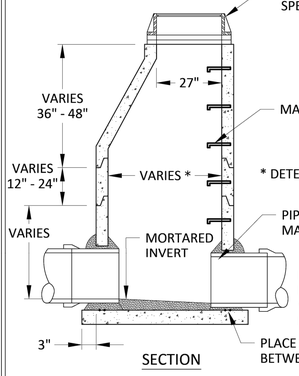


CASTING AND ADJUSTMENT RINGS AS SPECIFIED. PER DETAIL PLATE STR-23.

MANHOLE STEPS 16" MAX ON CENTER.

* DETERMINED BY PIPE SIZE

PIPE SHALL BE CUT TO BE 2"-4" INSIDE MANHOLE WALL.

DOGHOUSES SHALL BE MORTARED BOTH INSIDE AND OUTSIDE OF MANHOLE. WATERSTOP GASKET REQUIRED FOR POLYPROPYLENE PIPE.

PLACE 2 BEADS OF RAMNEK OR EQUAL, BETWEEN BOTTOM SLAB AND BARREL SECTION

SECTION

Cottage Grove — Where Pride and Prosperity Meet

STANDARD DETAILS
STORM SEWER MANHOLE
COTTAGE GROVE, MINNESOTA

JANUARY 2025

PLATE NO. STO-1

48_STO1.DWG

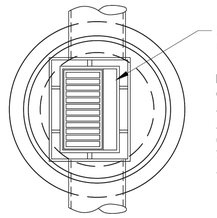

24"X36" SLAB OPENING FOR CASTING SPECIFIED

DIMENSION FROM BACK OF CURB TO CENTER OF PIPE:
4' DIA. MH - 9" IN FROM BACK OF CURB
5' DIA. MH - 3" IN FROM BACK OF CURB
6' DIA. MH - 3" BEHIND BACK OF CURB
7' DIA. MH - 9" BEHIND BACK OF CURB
8' DIA. MH - 15" BEHIND BACK OF CURB

PLAN

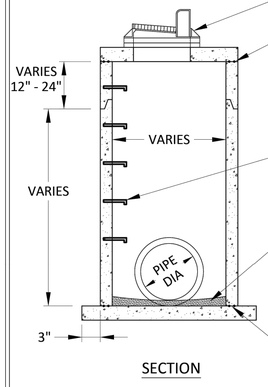


CASTING AND ADJUSTMENT RINGS AS SPECIFIED. PER DETAIL PLATE STR-23.

TOP OF BARREL SECTION BELOW TOP SLAB TO HAVE FLAT TOP EDGE SEALED WITH 2 BEADS OF RAMNEK OR EQUAL.

MANHOLE STEPS 16" MAX ON CENTER.

MORTAR BOTTOM
DOGHOUSES SHALL BE MORTARED BOTH INSIDE AND OUTSIDE OF MANHOLE. WATERSTOP GASKET REQUIRED FOR POLYPROPYLENE PIPE.

PLACE 2 BEADS OF RAMNEK OR EQUAL BETWEEN BOTTOM SLAB AND BARREL SECTION.

SECTION

Cottage Grove — Where Pride and Prosperity Meet

STANDARD DETAILS
CATCH BASIN MANHOLE
COTTAGE GROVE, MINNESOTA

JANUARY 2025

PLATE NO. STO-5

48_STO5.DWG

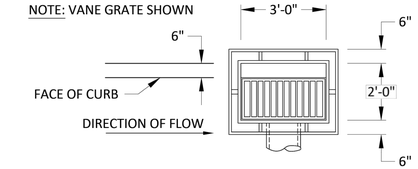


PLAN

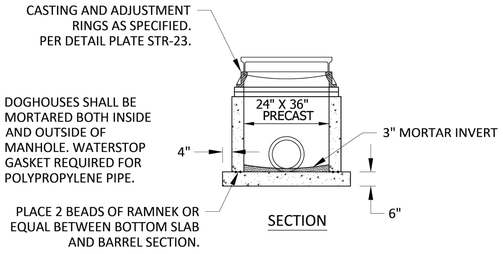


DOGHOUSES SHALL BE MORTARED BOTH INSIDE AND OUTSIDE OF MANHOLE. WATERSTOP GASKET REQUIRED FOR POLYPROPYLENE PIPE.

PLACE 2 BEADS OF RAMNEK OR EQUAL BETWEEN BOTTOM SLAB AND BARREL SECTION.

SECTION

Cottage Grove — Where Pride and Prosperity Meet

STANDARD DETAILS
CATCH BASIN
COTTAGE GROVE, MINNESOTA

JANUARY 2025

PLATE NO. STO-7

48_STO7.DWG

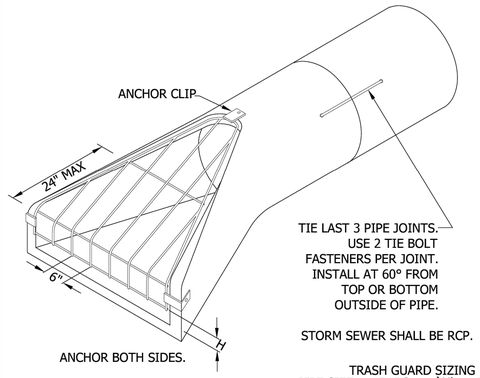


ANCHOR BOTH SIDES.

ISOMETRIC

TIE LAST 3 PIPE JOINTS. USE 2 TIE BOLT FASTENERS PER JOINT. INSTALL AT 60° FROM TOP OR BOTTOM OUTSIDE OF PIPE.

STORM SEWER SHALL BE RCP.

TRASH GUARD SIZING

| PIPE SIZE | BARS | 'H' | BOLTS |
|---|---|---|---|
| 12"-18" | 3/4"Ø | 3"-4" | 5/8" |
| 21"-42" | 1"Ø | 4"-6" | 3/4" |
| 48"-72" | 1 1/4"Ø | 6"-8" | 1" |

SEE CITY PLATE NO. STO-12 AND STO-13 FOR RIPRAP PLACEMENT.

Cottage Grove — Where Pride and Prosperity Meet

STANDARD DETAILS
FLARED END SECTION AND TRASH GAURD
COTTAGE GROVE, MINNESOTA

JANUARY 2025

PLATE NO. STO-11

48_STO11.DWG

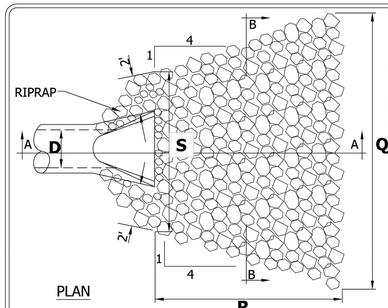


PLAN

(15' MIN.)

**RIPRAP AREA SIZES**

| D | Q | R | S |
|---|---|---|---|
| 12" | 11' | 15' | 7' |
| 24" | 15' | 15' | 9' |
| 36" | 19' | 15' | 11' |
| 48" | 20' | 16' | 12' |
| 54" | 25' | 22' | 13' |

**RIPRAP REQUIREMENTS**

| D | CY | CLASS | DEPTH |
|---|---|---|---|
| 12" TO 24" | 15 TO 20 | CL.3 | 3' |
| 27" TO 33" | 20 TO 25 | CL.3 | 3' |
| 36" TO 48" | 25 TO 38 | CL.3 | 3' |
| 54" AND UP | 72 AND UP | CL.4 | 4' |

(ONE CUBIC YARD IS APPROX. 2,800 LBS.)

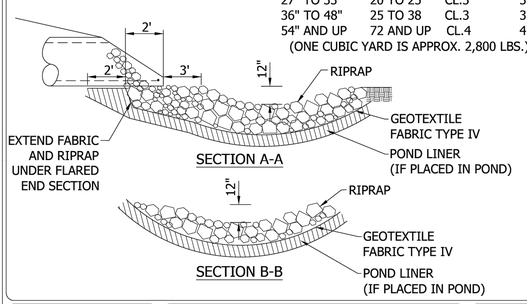


Cottage Grove — Where Pride and Prosperity Meet

STANDARD DETAILS
RIPRAP AT FLARED END SECTION
COTTAGE GROVE, MINNESOTA

JANUARY 2025

PLATE NO. STO-12

48_STO12.DWG

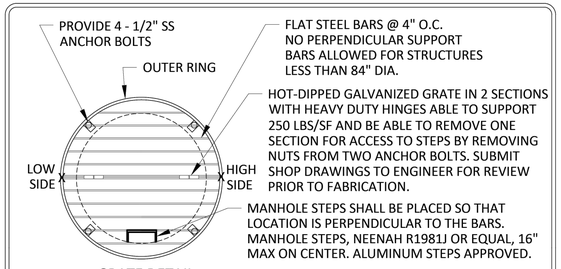


FLAT STEEL BARS @ 4" O.C.
NO PERPENDICULAR SUPPORT BARS ALLOWED FOR STRUCTURES LESS THAN 84" DIA.

HOT-DIPPED GALVANIZED GRATE IN 2 SECTIONS WITH HEAVY DUTY HINGES ABLE TO SUPPORT 250 LBS/SF AND BE ABLE TO REMOVE ONE SECTION FOR ACCESS TO STEPS BY REMOVING NUTS FROM TWO ANCHOR BOLTS. SUBMIT SHOP DRAWINGS TO ENGINEER FOR REVIEW PRIOR TO FABRICATION.

MANHOLE STEPS SHALL BE PLACED SO THAT LOCATION IS PERPENDICULAR TO THE BARS. MANHOLE STEPS, NEENAH R1981J OR EQUAL, 16" MAX ON CENTER. ALUMINUM STEPS APPROVED.

GRATE DETAIL

| MANHOLE DIAMETER | SKIMMER OPENING |
|---|---|
| 4' | 3'x1.5' |
| 5' | 4.5'x1.5' |
| 6' | 6'x1.5' |

| DIAMETER | * D (TOP OF STRUCTURE SLOPE) |
|---|---|
| 48" DIA | 9" OR 18" |
| >48" DIA | 12" OR 24" |

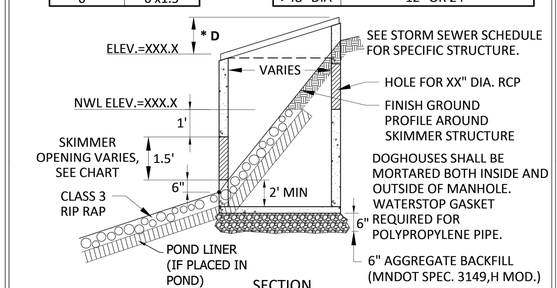


SEE STORM SEWER SCHEDULE FOR SPECIFIC STRUCTURE.

HOLE FOR XX" DIA. RCP

FINISH GROUND PROFILE AROUND SKIMMER STRUCTURE

DOGHOUSES SHALL BE MORTARED BOTH INSIDE AND OUTSIDE OF MANHOLE. WATERSTOP GASKET REQUIRED FOR POLYPROPYLENE PIPE.

6" AGGREGATE BACKFILL (MNDOT SPEC. 3149,H MOD.)

SECTION

Cottage Grove — Where Pride and Prosperity Meet

STANDARD DETAILS
STANDARD SKIMMER STRUCTURE
COTTAGE GROVE, MINNESOTA

JANUARY 2025

PLATE NO. STO-16

48_STO16.DWG

PRELIMINARY - NOT FOR CONSTRUCTION

| No. | REVISIONS | DATE | BY |
|---|---|---|---|

Kimley»Horn

© 2026 KIMLEY-HORN AND ASSOCIATES, INC.

11995 SINGLETREE LN. SUITE 225, EDEN PRAIRIE, MN 55344
PHONE: 612-315-1272
WWW.KIMLEY-HORN.COM

I HEREBY CERTIFY THAT THIS PLAN, SPECIFICATION OR REPORT WAS PREPARED BY ME OR UNDER MY DIRECT SUPERVISION AND THAT I AM A DULY LICENSED PROFESSIONAL ENGINEER UNDER THE LAWS OF THE STATE OF MINNESOTA.

BRIAN M. WURDEMAN, P.E. — MN LIC. NO. 53113 — DATE: 01/28/2026

KHA PROJECT 161369000
DATE 01/28/2026
SCALE AS SHOWN
DESIGNED BY MTL
DRAWN BY AKK
CHECKED BY BMW

# GRADING DETAILS

PANERA - COTTAGE GROVE
PREPARED FOR
CA COMMERCIAL
COTTAGE GROVE MN

SHEET NUMBER
C502

K:\TCW_LDEV\ca commercial\cottage grove, mn\3 Design\CAD\plansheets\C5-GRADING DETAILS.dwg February 17, 2026 - 2:22pm
This document, together with the concepts and designs presented herein, as an instrument of service, is intended only for the specific purpose and client for which it was prepared. Reuse of and improper reliance on this document without written authorization and adaptation by Kimley-Horn and Associates, Inc. shall be without liability to Kimley-Horn and Associates, Inc.

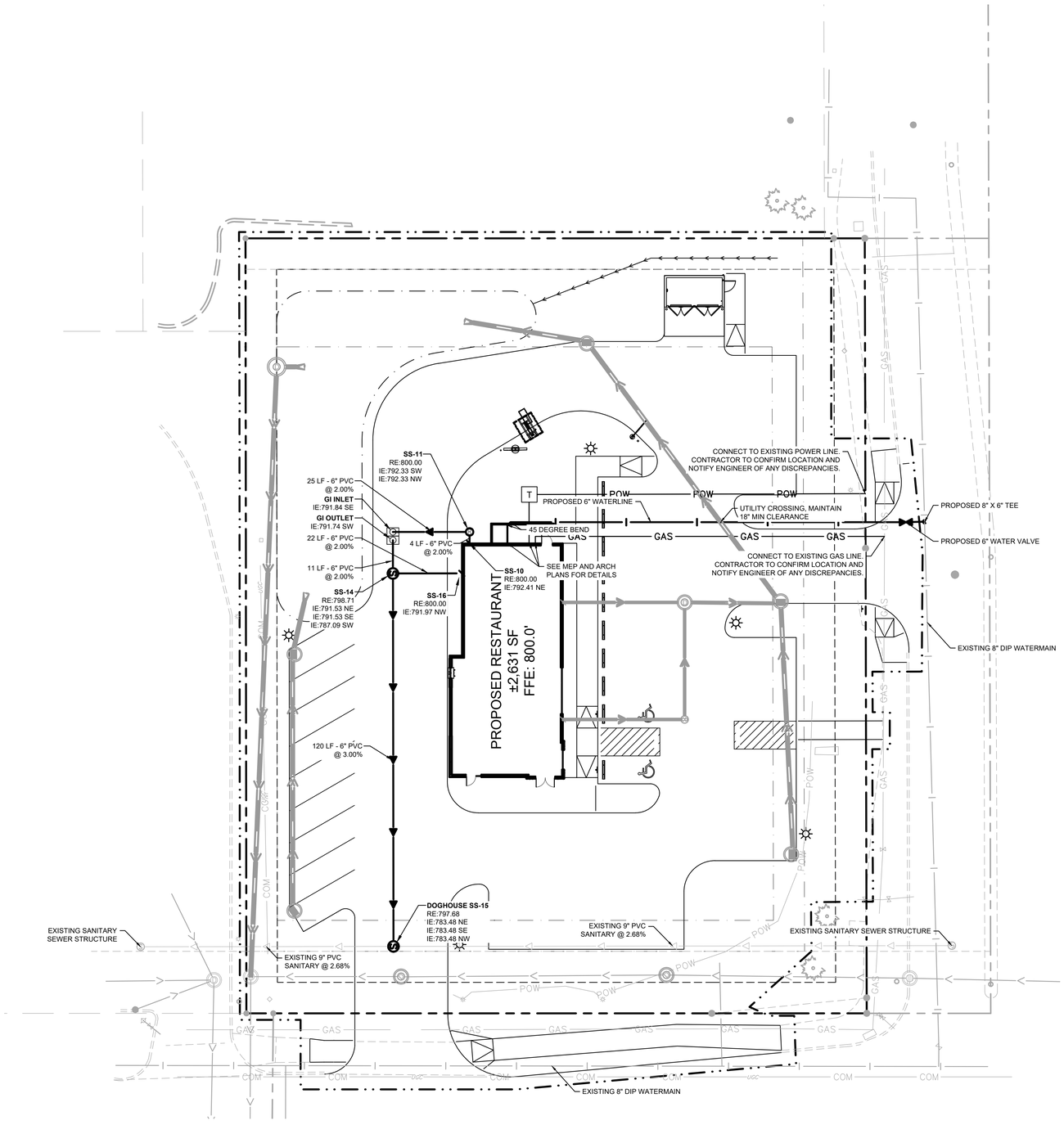


## LEGEND

| EXISTING | PROPOSED | |
|---|---|---|
| | | GATE VALVE |
| | | HYDRANT |
| | | REDUCER |
| | | TEE |
| | | SANITARY SEWER MANHOLE |
| | | SANITARY CLEANOUT |
| | | WATERMAIN |
| | | SANITARY SEWER |
| | | STORM SEWER |
| POW | POW | UNDERGROUND ELECTRIC |
| COM | COM | TELEPHONE |
| GAS | GAS | GAS MAIN |

## UTILITY PLAN NOTES

1. INSTALL UTILITIES IN ACCORDANCE WITH APPLICABLE CITY SPECIFICATIONS, STATE PLUMBING CODE, AND BUILDING PERMIT REQUIREMENTS.
2. CONTACT STATE 811 CALL-BEFORE-YOU-DIG LOCATING SERVICE AT LEAST TWO WORKING DAYS PRIOR TO EXCAVATION FOR UNDERGROUND UTILITY LOCATIONS.
3. CONTRACTOR IS RESPONSIBLE FOR ALL HORIZONTAL AND VERTICAL CONTROL.
4. SANITARY SEWER PIPE SHALL BE:
   PVC: ASTM D-2729, D-3034
   PVC SCH 40: ASTM D-1785, F-714, F-894
   SANITARY SEWER FITTINGS SHALL BE:
   PVC: ASTM D-2729, D-3034
   PVC SCH40: ASTM D-2665, F-2794, F-1866
5. WATER MAIN PIPE SHALL BE:
   PVC: ASTM D-1785, D-2241, AWWA C-900
   DUCTILE IRON: AWWA C-150
   WATER MAIN FITTINGS SHALL BE:
   PVC: ASTM D-2464, D-2466, D-2467, F-1970, AWWA C-907
   DUCTILE IRON: AWWA C-153, C-110, ASME 316.4
5. STORM SEWER PIPE SHALL BE:
   RCP: ASTM C-76
   HDPE: ASTM F-714, F-894
   PVC: ASTM D-2729
   PVC SCH40: ASTM D-1785, D-2665, F-794
   DRAIN TILE SHALL BE:
   PE: ASTM F-6667
   PVC: ASTM D-2729
   STORM SEWER FITTINGS SHALL BE:
   RCP: ASTM C-76, JOINTS PER ASTM C-361, C-990, AND C-443
   HDPE: ASTM D-3212
   PVC: ASTM D-2729, JOINTS PER ASTM D-3212
   PVC SCH40: ASTM D-2665, F-794, F-1866
6. WHEN CONNECTING TO AN EXISTING UTILITY LINE, FIELD VERIFY THE LOCATION, DEPTH, AND SIZE OF THE EXISTING PIPE(S) PRIOR TO INSTALLATION OF THE NEW LINES. NOTIFY THE PROJECT ENGINEER OF ANY DISCREPANCIES OR VARIATIONS IMPACTING THE PROPOSED DESIGN OF THE PROJECT.
7. PLACE AND COMPACT ALL FILL MATERIAL PRIOR TO INSTALLATION OF PROPOSED UNDERGROUND UTILITIES. MINIMUM TRENCH WIDTH SHALL BE 2 FEET.
8. MAINTAIN A MINIMUM OF 7'-6" COVER ON ALL WATER LINES.
9. FOR WATER LINES AND STUB-OUTS UTILIZE MECHANICAL JOINTS WITH RESTRAINTS SUCH AS THRUST BLOCKING, WITH STAINLESS STEEL OR COBALT BLUE BOLTS, OR AS INDICATED IN THE CITY SPECIFICATIONS AND PROJECT DOCUMENTS.
10. MAINTAIN 18-INCH MINIMUM VERTICAL SEPARATION WHERE SEWER PIPE CROSSES WATER LINES (OUTSIDE EDGE OF PIPE TO OUTSIDE EDGE OF PIPE OR STRUCTURE). PROVIDE 10-FOOT HORIZONTAL SEPARATION BETWEEN SEWER PIPE AND WATER LINES.
11. IN THE EVENT OF A VERTICAL CONFLICT BETWEEN WATER LINES, SANITARY LINES, STORM LINES AND GAS LINES (OR ANY OBSTRUCTION EXISTING AND PROPOSED), THE SANITARY PIPE MATERIAL SHALL BE PVC SCHEDULE 40 OR PVC C900 AND HAVE MECHANICAL JOINTS AT LEAST 10 FEET ON EITHER SIDE OF THE CENTER LINE OF THE CROSSING. THE WATER LINE SHALL HAVE MECHANICAL JOINTS WITH APPROPRIATE FASTENERS AS REQUIRED TO PROVIDE A MINIMUM OF 18-INCH VERTICAL SEPARATION MEETING REQUIREMENTS OF ANSI A21.10 OR ANSI 21.11 (AWWA C-151) (CLASS 50).
12. ALL PVC & HDPE SEWER AND WATER PIPE SHALL HAVE A TRACER WIRE INSTALLED IN THE TRENCH AND TERMINATED PER THE DETAILS.
13. UNDERGROUND UTILITY LINES SHALL BE INSTALLED, INSPECTED AND APPROVED PRIOR TO PLACING BACKFILL.
14. IN PAVEMENT AREAS, RAISE MANHOLE CASTINGS TO BE FLUSH WITH PROPOSED FINISHED SURFACE GRADE. IN GREEN AREAS, RAISE MANHOLE CASTINGS TO BE ONE FOOT ABOVE FINISHED GROUND ELEVATION & INSTALL A WATERTIGHT LID.
15. REFER TO PLUMBING PLANS FOR LOCATION, SIZE AND ELEVATION OF UTILITY SERVICE CONNECTIONS AND ROOF DRAINS TO THE INTERIOR BUILDING SYSTEMS. BACKFLOW DEVICES (DDCV AND PRZ ASSEMBLIES) & METERS ARE LOCATED INSIDE THE BUILDING.
16. CONTRACTOR IS SPECIFICALLY CAUTIONED THAT THE LOCATION AND/OR ELEVATION OF EXISTING UTILITIES AS SHOWN ON THESE PLANS IS BASED ON RECORDS OF THE VARIOUS UTILITY COMPANIES, AND WHERE POSSIBLE, MEASUREMENTS TAKEN IN THE FIELD. THE INFORMATION IS NOT TO BE RELIED ON AS BEING EXACT OR COMPLETE. THE CONTRACTOR MUST CALL THE APPROPRIATE UTILITY COMPANIES AT LEAST 72 HOURS BEFORE ANY EXCAVATION TO REQUEST EXACT FIELD LOCATION OF UTILITIES. IT SHALL BE THE RESPONSIBILITY OF THE CONTRACTOR TO RELOCATE ALL EXISTING UTILITIES WHICH CONFLICT WITH THE PROPOSED IMPROVEMENTS SHOWN ON THE PLANS.
17. CONTRACTOR IS RESPONSIBLE FOR ALL NECESSARY INSPECTIONS AND/OR CERTIFICATIONS REQUIRED BY CODES AND/OR UTILITY SERVICE COMPANIES. COORDINATE WITH ALL UTILITY COMPANIES FOR INSTALLATION REQUIREMENTS AND SPECIFICATIONS.
18. REFER TO THE SITE ELECTRICAL PLANS FOR SPECIFICATIONS OF THE PROPOSED SITE LIGHTING AND ELECTRICAL EQUIPMENT.
19. EXCAVATE DRAINAGE TRENCHES TO FOLLOW PROPOSED STORM SEWER ALIGNMENTS. REFER TO THE UTILITY PLANS FOR LAYOUT AND ELEVATIONS FOR PROPOSED SANITARY SEWER, WATER MAIN, AND OTHER BUILDING UTILITY SERVICE CONNECTIONS. REFER TO THE GRADING PLAN FOR DETAILED SURFACE ELEVATIONS.
20. EXCESS MATERIAL, ABANDONED UTILITY ITEMS, AND OTHER UNUSABLE MATERIALS SHALL BECOME THE PROPERTY OF THE CONTRACTOR AND SHALL BE DISPOSED OF OFF THE CONSTRUCTION SITE.
21. COORDINATE WITH THE PLUMBING PLANS FOR THE LOCATION, SIZE AND ELEVATION OF THE PROPOSED UNDERGROUND ROOF DRAIN CONNECTIONS.
22. WHERE STORM SEWER ROOF DRAINS HAVE LESS THAN 4-FEET OF COVER IN PAVED AREAS OR 3-FEET OF COVER IN LANDSCAPE AREAS, PROVIDE 3-INCH THICK INSULATION A MINIMUM OF 5-FEET IN WIDTH, CENTERED ON THE PIPE.
23. ALL STORM SEWER PIPE JOINTS SHALL BE WATER-TIGHT CONNECTIONS.
24. ALL STORM SEWER PIPE CONNECTIONS TO MANHOLES SHALL BE GASKETED AND WATER TIGHT. BOOTED COUPLERS AT THE STRUCTURE OR A WATER STOP WITH NON-SHRINK GROUT MAY BE USED IN ACCORDANCE WITH LOCAL CODES.
25. CONTRACTOR SHALL AIR TEST ALL STORM SEWER PIPE IN ACCORDANCE WITH LOCAL CODE REQUIREMENTS.

Know what's **below.** **Call** before you dig.

GRAPHIC SCALE IN FEET
0 10 20 40

PRELIMINARY - NOT FOR CONSTRUCTION

| No. | REVISIONS | DATE | BY |
|---|---|---|---|

Kimley»Horn
© 2026 KIMLEY-HORN AND ASSOCIATES, INC.
11995 SINGLETREE LN, SUITE 225, EDEN PRAIRIE, MN 55344
PHONE: 612-315-1272
WWW.KIMLEY-HORN.COM

I HEREBY CERTIFY THAT THIS PLAN, SPECIFICATION OR REPORT WAS PREPARED BY ME OR UNDER MY DIRECT SUPERVISION AND THAT I AM A DULY LICENSED PROFESSIONAL ENGINEER UNDER THE LAWS OF THE STATE OF MINNESOTA.

BRIAN M. WURDEMAN, P.E.
DATE: 01/26/2026 LIC. NO. 53113 MN

| KHA PROJECT | 161369000 |
|---|---|
| DATE | 01/26/2026 |
| SCALE | AS SHOWN |
| DESIGNED BY | MTL |
| DRAWN BY | AKK |
| CHECKED BY | BMW |

# UTILITY PLAN

**PANERA - COTTAGE GROVE**
PREPARED FOR
**CA COMMERCIAL**
COTTAGE GROVE MN

SHEET NUMBER
**C600**

K:\TCW_LDEV\ca commercial\cottage grove, mn\3 Design\CAD\plansheets\C6-UTILITY PLAN.dwg February 17, 2026 - 2:22pm
This document, together with the concepts and designs presented herein, as an instrument of service, is intended only for the specific purpose and client for which it was prepared. Reuse of and improper reliance on this document without written authorization and adaptation by Kimley-Horn and Associates, Inc. shall be without liability to Kimley-Horn and Associates, Inc.

Reuse of and improper reliance on this document without written authorization and adaptation by Kimley-Horn and Associates, Inc. shall be without liability to Kimley-Horn and Associates, Inc.

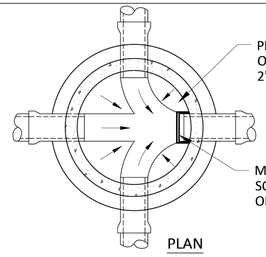


PLAN

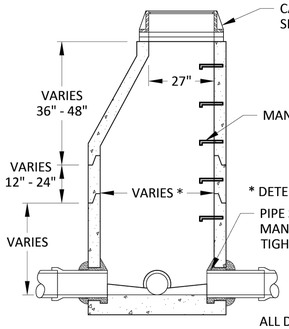


SECTION



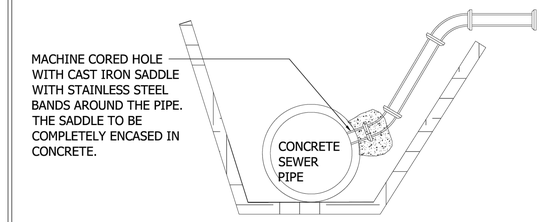


CONCRETE SANITARY OR STORM SEWER

NOTE: SERVICE CONNECTIONS TO BE AT 2 O'CLOCK OR 10 O'CLOCK POSITION.

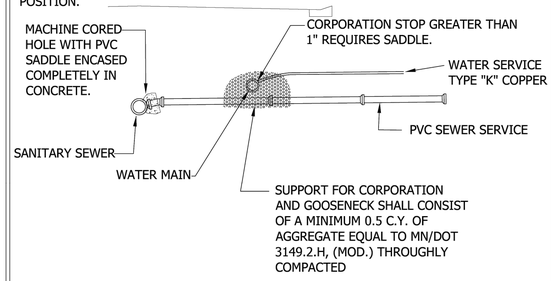


WATER AND PVC SANITARY SEWER



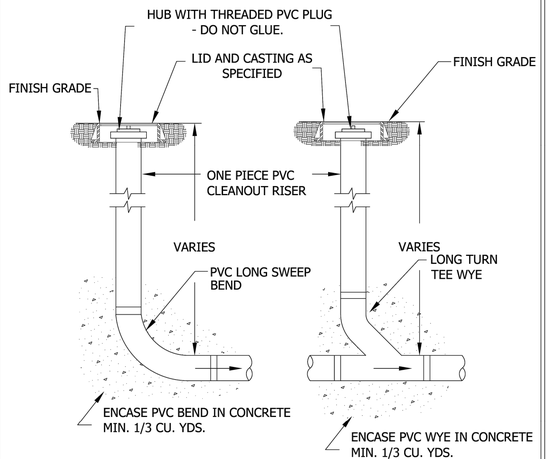


END OF LINE CLEANOUT

IN LINE CLEANOUT



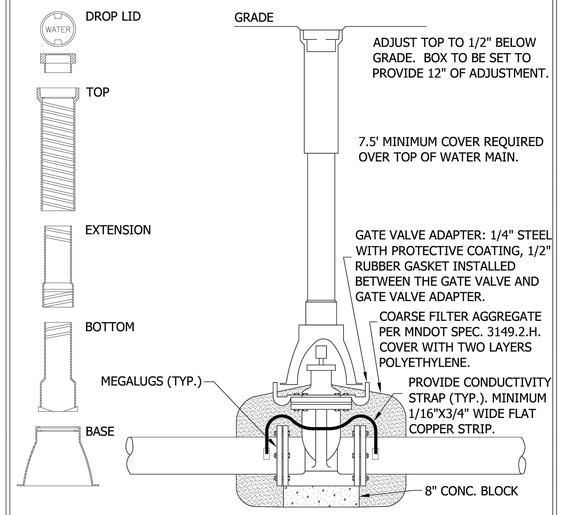




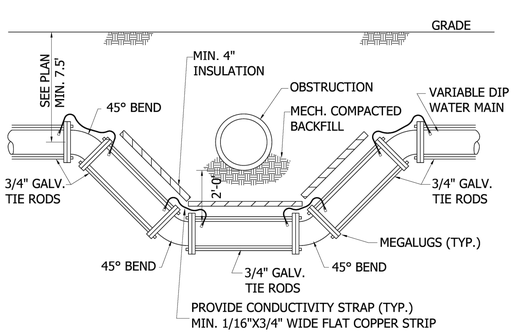




PRELIMINARY - NOT FOR CONSTRUCTION

| No. | REVISIONS | DATE | BY |
|---|---|---|---|


Kimley»Horn


© 2026 KIMLEY-HORN AND ASSOCIATES, INC.


11995 SINGLETREE LN. SUITE 225, EDEN PRAIRIE, MN 55344
PHONE: 612-315-1272
WWW.KIMLEY-HORN.COM


I HEREBY CERTIFY THAT THIS PLAN, SPECIFICATION OR REPORT WAS PREPARED BY ME OR UNDER MY DIRECT SUPERVISION AND THAT I AM A LICENSED PROFESSIONAL ENGINEER UNDER THE LAWS OF THE STATE OF MINNESOTA.

BRIAN M. WURDEMAN, P.E. — MN — LIC. NO. 53113 — DATE: 01/28/2026

| | |
|---|---|
| KHA PROJECT | 161369000 |
| DATE | 01/28/2026 |
| SCALE | AS SHOWN |
| DESIGNED BY | MTL |
| DRAWN BY | AKK |
| CHECKED BY | BMW |

# UTILITY DETAILS

**PANERA - COTTAGE GROVE**
PREPARED FOR
**CA COMMERCIAL**
COTTAGE GROVE — MN

SHEET NUMBER
**C601**

K:\TCW_LDEV\ca commercial\cottage grove, mn\3 Design\CAD\plansheets\C6-UTILITY DETAILS.dwg February 17, 2026 - 2:22pm
This document, together with the concepts and designs presented herein, as an instrument of service, is intended only for the specific purpose and client for which it was prepared. Reuse of and

Know what's below. Call before you dig.

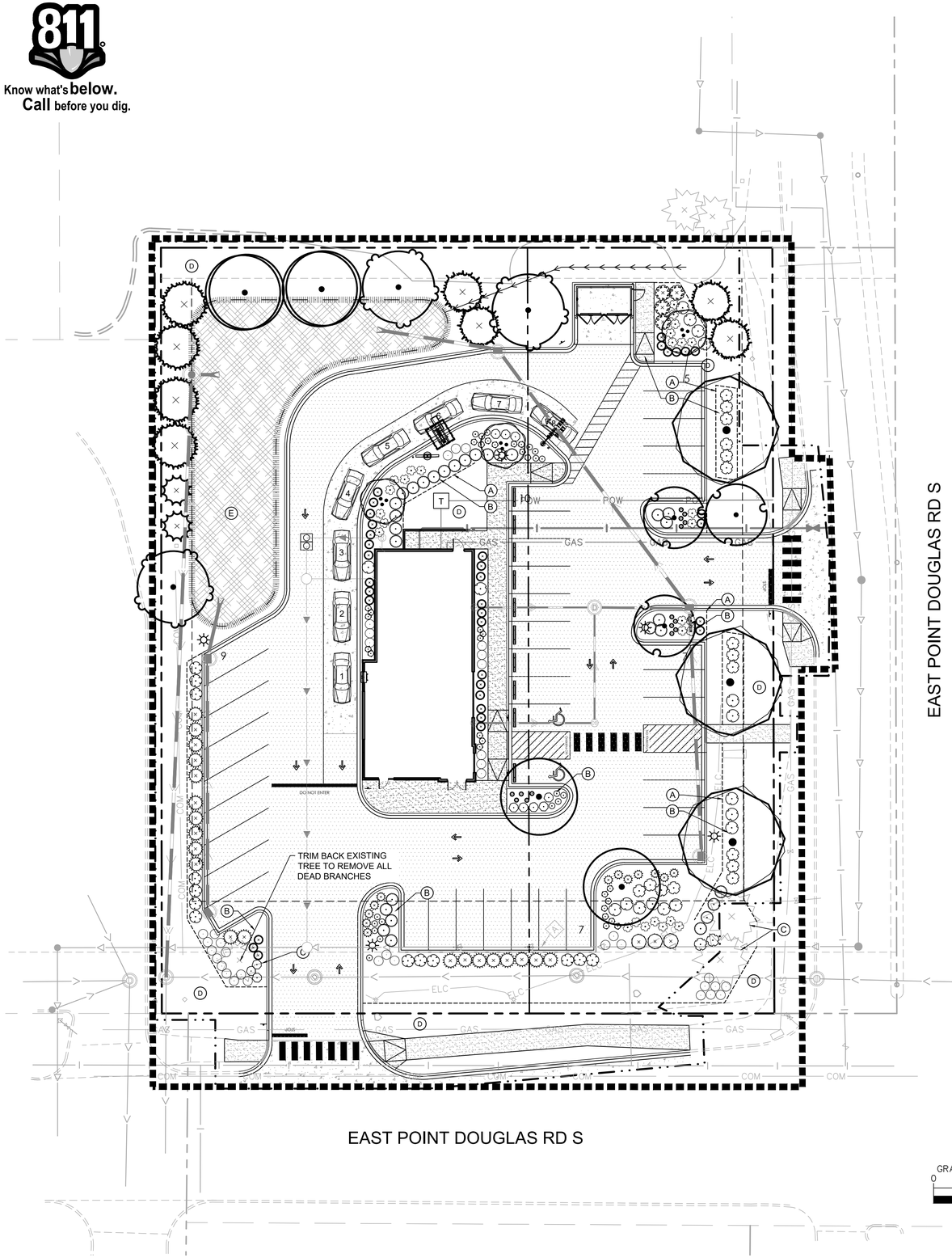


## LANDSCAPE SUMMARY

**ZONE: MU - MIXED USE**

**PARKING LOT REQUIREMENTS**

| | |
|---|---|
| LOT PERIMETER REQUIRED: | THE AREA WITHIN FIFTEEN FEET (15') OF A PARKING LOT PERIMETER SHALL BE LANDSCAPED WITH CLUSTERED LANDSCAPED MATERIALS. |
| LOT PERIMETER PROVIDED: | THE AREA WITHIN FIFTEEN FEET (15') OF A PARKING LOT PERIMETER PLANTED WITH CLUSTERED LANDSCAPED MATERIALS. |
| INTERIOR ISLAND AREA REQUIREMENT: | PARKING LOTS WITH MORE THAN TWENTY-FIVE (25) PARKING STALLS SHALL CONTAIN INTERIOR LANDSCAPED ISLANDS OR OTHER LANDSCAPED TRAFFIC CONTROL OR NATURAL STORMWATER MANAGEMENT FEATURES MAKING UP AT LEAST EIGHT PERCENT (8%) OF THE PARKING LOT AREA IN SIZE. |
| INTERIOR ISLAND AREA REQUIRED: | 1,417 S.F. = (17,718 S.F. PARKING LOT AREA * 0.08) |
| INTERIOR ISLAND AREA PROVIDED: | 2,480 S.F. |

**BUILDING PERIMETER REQUIREMENTS**

| | |
|---|---|
| BUILDING PERIMETER REQUIREMENT: | THE SIDES OF A BUILDING THAT FACE A PUBLIC STREET OR PARKING LOT SHALL BE LANDSCAPED FOR A LENGTH EQUAL TO ONE-HALF (1/2) OF THE BUILDING DIMENSION. |
| BUILDING LANDSCAPE REQUIRED: | 59 L.F. = (118 BUILDING L.F. / 2) |
| BUILDING LANDSCAPE PROVIDED: | 46 L.F. |

**OPEN SPACE REQUIREMENTS**

| | |
|---|---|
| OPEN SPACE REQUIREMENT: | AT LEAST 30% OF TOTAL GROSS DEVELOPMENT SITE TO BE OPEN SPACE. OPEN SPACE AREAS TO NOT BE COVERED BY BUILDING OR IMPERVIOUS SURFACE AND TO BE PLANTED WITH TREES, SHRUBS, FLOWERS OR NATIVE PLANT SPECIES. |
| OPEN SPACE REQUIRED: | 15,028 S.F. = (50,094 SITE AREA S.F. * .30) |
| OPEN SPACE PROVIDED: | 22,015 S.F. / 44% |

**MINIMUM PLANT QUANTITY REQUIREMENTS**

| | |
|---|---|
| TREE AND SHRUB REQUIREMENT: | THE NUMBER OF TREES AND SHRUBS REQUIRED SHALL BE CALCULATED BY MULTIPLYING THE SITE AREA IN SQUARE FEET BY THE COEFFICIENTS IN THE FOLLOWING TABLE FOR EACH LANDSCAPE MATERIAL: |

| | |
|---|---|
| OVERSTORY DECIDUOUS: | 0.0002786 |
| CONIFEROUS: | 0.0002600 |
| SHRUBS: | 0.0006 |

| | |
|---|---|
| TREES AND SHRUBS REQUIRED: | 14 OVERSTORY DECIDUOUS = (50,094 SITE AREA S.F. * 0.0002786)<br>13 CONIFEROUS = (50,094 SITE AREA S.F. * 0.0002600)<br>30 SHRUBS = (50,094 SITE AREA S.F. * 0.0006) |
| TREES AND SHRUB PROVIDED: | 14 OVERSTORY DECIDUOUS<br>13 CONIFEROUS = 2 EXISTING + 11 PROPOSED<br>287 SHRUBS |

## LANDSCAPE LEGEND

- EXISTING CONIFEROUS TREE (TYP.)
- EDGER (TYP.)
- APPROXIMATE LIMITS OF SEEDING/ SEEDING ALL DISTURBED AREAS (TYP.)
- SEED EDGE (TYP.)
- SEED WITH MNDOT WD MIX: WET DITCH SEED MIX (TYP.)

## LANDSCAPE KEYNOTES (A)

(A) EDGER (TYP.)
(B) DOUBLE SHREDDED HARDWOOD MULCH (TYP.)
(C) EXISTING TREE TO REMAIN (TYP.)
(D) SOD (TYP.)
(E) MNDOT WD MIX: WET DITCH SEED MIX (TYP.)

## PLANT KEY

| SYMBOL | CODE | COMMON / BOTANICAL NAME |
|---|---|---|
| **CONIFEROUS TREE** | | |
| | BHS | BLACK HILLS SPRUCE<br>PICEA GLAUCA 'DENSATA' |
| | WHC | WHITE CEDAR<br>THUJA OCCIDENTALIS `WHITE CEDAR` |
| | WHP | WHITE PINE<br>PINUS STROBUS |
| **ORNAMENTAL TREE** | | |
| | ALS | AUTUMN BRILLANCE SERVICEBERRY<br>AMELANCHIER X GRANDIFLORA `AUTUMN BRILLANCE` |
| **OVERSTORY TREE** | | |
| | BOL | BOULEVARD LINDEN<br>TILIA AMERICANA 'BOULEVARD' |
| | HCK | COMMON HACKBERRY<br>CELTIS OCCIDENTALIS |
| | IHL | IMPERIAL HONEYLOCUST<br>GLEDITSIA TRIACANTHOS VAR. INERMIS `IMPERIAL` |
| | KCY | ESPRESSO KENTUCKY COFFEETREE<br>GYMNOCLADUS DIOICA `ESPRESSO` |
| | SWO | SWAMP WHITE OAK<br>QUERCUS BICOLOR |
| **CONIFEROUS SHRUBS** | | |
| | HZA | HETZ MIDGET ARBORVITAE<br>THUJA OCCIDENTALIS `HETZ MIDGET` |
| | SCJ | SCANDIA JUNIPER<br>JUNIPERUS SABINA `SCANDIA` |
| | SGJ | SEA GREEN JUNIPER<br>JUNIPERUS CHINENSIS `SEA GREEN` |
| | TCA | TECHNY ARBORVITAE<br>THUJA OCCIDENTALIS `TECHNY` |
| | WBM | MUGO WHITE BUD PINE<br>PINUS MUGO `WHITE BUD` |
| **DECIDUOUS SHRUBS** | | |
| | ANH | ANNABELLE HYDRANGEA<br>HYDRANGEA ARBORESCENS `ANNABELLE` |
| | BLC | IROQUOIS BEAUTY BLACK CHOKEBERRY<br>ARONIA MELANOCARPA `IROQUOIS BEAUTY` TM |
| | GLS | GRO-LOW FRAGRANT SUMAC<br>RHUS AROMATICA `GRO-LOW` |
| | LDN | LITTLE DEVIL NINEBARK<br>PHYSOCARPUS OPULIFOLIUS `DONNA MAY` TM |
| **ORNAMENTAL GRASSES** | | |
| | BAG | BLONDE AMBITION BLUE GRAMA GRASS<br>BOUTELOUA GRACILIS `BLONDE AMBITION` |
| | HMS | HEAVY METAL SWITCHGRASS<br>PANICUM VIRGATUM 'HEAVY METAL' |
| | KFG | KARL FOERSTER FEATHER REED GRASS<br>CALAMAGROSTIS X ACUTIFLORA `KARL FOERSTER` |
| **PERENNIALS** | | |
| | AFS | AUTUMN FIRE SEDUM<br>SEDUM X 'AUTUMN FIRE' |
| | BJB | BLUE JEAN BABY RUSSIAN SAGE<br>PEROVSKIA ATRIPLICIFOLIA 'BLUE JEAN BABY' |
| | WLC | WALKER'S LOW CATMINT<br>NEPETA X FAASSENII 'WALKER'S LOW' |

**NOTE:**
SEE SHEET L101 FOR FULL PLANT SCHEDULE

PRELIMINARY - NOT FOR CONSTRUCTION

| No. | REVISIONS | DATE | BY |
|---|---|---|---|

Kimley»Horn
© 2026 KIMLEY-HORN AND ASSOCIATES, INC.
11995 SINGLETREE LN, SUITE 225, EDEN PRAIRIE, MN 55344
PHONE: 612-315-1272
WWW.KIMLEY-HORN.COM

I HEREBY CERTIFY THAT THIS PLAN, SPECIFICATION OR REPORT WAS PREPARED BY ME OR UNDER MY DIRECT SUPERVISION AND THAT I AM A DULY LICENSED PROFESSIONAL LANDSCAPE ARCHITECT UNDER THE LAWS OF THE STATE OF MINNESOTA.

RYAN A. HYLLESTED, PLA
DATE: 01/28/2026 LIC. NO. 53828 MN

| | |
|---|---|
| KHA PROJECT | 161369000 |
| DATE | 01/28/2026 |
| SCALE | AS SHOWN |
| DESIGNED BY | CFK |
| DRAWN BY | CFK |
| CHECKED BY | RAH |

# LANDSCAPE PLAN

**PANERA - COTTAGE GROVE**
PREPARED FOR
**CA COMMERCIAL**
COTTAGE GROVE MN

SHEET NUMBER
**L100**

K:\TCW_LDEV\ca commercial\cottage grove, mn\3 Design\CAD\plansheets\L1-LANDSCAPE PLAN.DWG February 19, 2026 - 9:06am
This document, together with the concepts and designs presented herein, as an instrument of service, is intended only for the specific purpose and client for which it was prepared. Reuse of and improper reliance on this document without written authorization and adaptation by Kimley-Horn and Associates, Inc. shall be without liability to Kimley-Horn and Associates, Inc.

K:\TCW_LDEV\ca commercial\cottage grove, mn\3 Design\CAD\plansheets\L1-LANDSCAPE DETAILS.DWG February 19, 2026 - 8:48am
This document, together with the concepts and designs presented herein, as an instrument of service, is intended only for the specific purpose and client for which it was prepared. Reuse of and improper reliance on this document without written authorization and adaptation by Kimley-Horn and Associates, Inc. shall be without liability to Kimley-Horn and Associates, Inc.

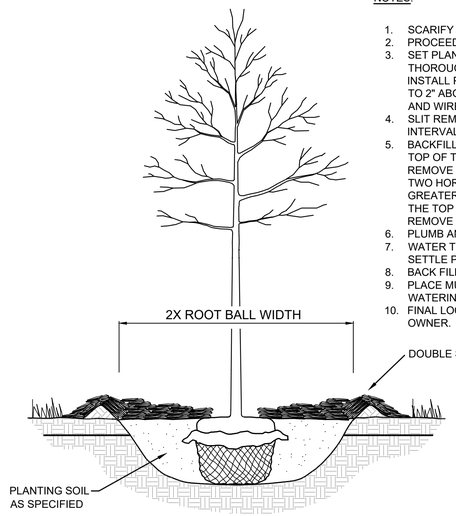


NOTES:

1. SCARIFY SIDES AND BOTTOM OF HOLE.
2. PROCEED WITH CORRECTIVE PRUNING.
3. SET PLANT ON UNDISTURBED NATIVE SOIL OR THOROUGHLY COMPACTED PLANTING SOIL. INSTALL PLANT SO THE ROOT FLARE IS AT OR UP TO 2" ABOVE THE FINISHED GRADE WITH BURLAP AND WIRE BASKET, (IF USED), INTACT.
4. SLIT REMAINING TREATED BURLAP AT 6" INTERVALS.
5. BACKFILL TO WITHIN APPROXIMATELY 12" OF THE TOP OF THE ROOTBALL, THEN WATER PLANT. REMOVE THE TOP 1/3 OF THE BASKET OR THE TOP TWO HORIZONTAL RINGS WHICHEVER IS GREATER. REMOVE ALL BURLAP AND NAILS FROM THE TOP 1/3 OF THE BALL. REMOVE ALL TWINE. REMOVE OR CORRECT STEM GIRDLING ROOTS.
6. PLUMB AND BACKFILL WITH PLANTING SOIL.
7. WATER THOROUGHLY WITHIN 2 HOURS TO SETTLE PLANTS AND FILL VOIDS.
8. BACK FILL VOIDS AND WATER SECOND TIME.
9. PLACE MULCH WITHIN 48 HOURS OF THE SECOND WATERING UNLESS SOIL MOISTURE IS EXCESSIVE.
10. FINAL LOCATION OF TREE TO BE APPROVED BY OWNER.

## 1 TREE PLANTING DETAIL

SCALE: N.T.S. L101

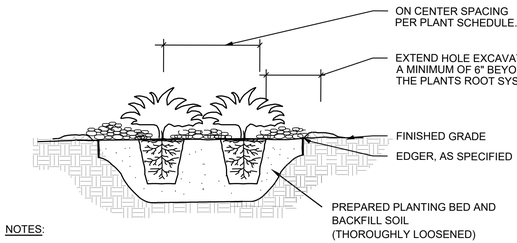


NOTES:

1. SCARIFY SIDES AND BOTTOM OF HOLE.
2. PROCEED WITH CORRECTIVE PRUNING OF TOP AND ROOT.
3. REMOVE CONTAINER AND SCORE OUTSIDE OF SOIL MASS TO REDIRECT AND PREVENT CIRCLING FIBROUS ROOTS. REMOVE OR CORRECT STEM GIRDLING ROOTS.
4. PLUMB AND BACKFILL WITH PLANTING SOIL.
5. WATER THOROUGHLY WITHIN 2 HOURS TO SETTLE PLANTS AND FILL VOIDS.
6. BACK FILL VOIDS AND WATER SECOND TIME.
7. PLACE MULCH WITHIN 48 HOURS OF THE SECOND WATERING UNLESS SOIL MOISTURE IS EXCESSIVE.
8. MIX IN 3-4" OF ORGANIC COMPOST.

## 2 SHRUB / PERENNIAL PLANTING DETAIL

SCALE: N.T.S. L101

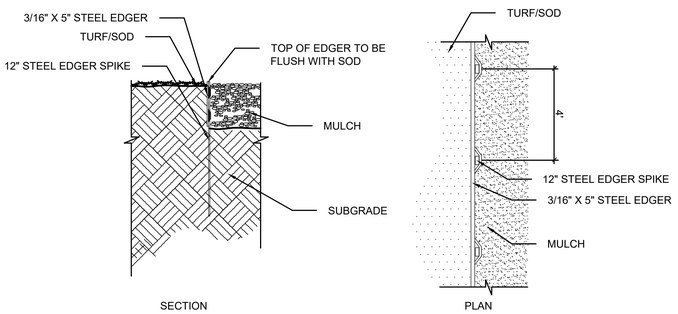


## 3 STEEL EDGER DETAIL

SCALE: N.T.S. L101

## PLANT SCHEDULE

| SYMBOL | CODE | QTY | COMMON NAME | BOTANICAL NAME | CONT | CAL |
|---|---|---|---|---|---|---|
| CONIFEROUS TREE | | | | | | |
| | BHS | 4 | BLACK HILLS SPRUCE | PICEA GLAUCA 'DENSATA' | B & B | 6` HT. |
| | WHC | 4 | WHITE CEDAR | THUJA OCCIDENTALIS `WHITE CEDAR` | B & B | 6` HT. |
| | WHP | 2 | WHITE PINE | PINUS STROBUS | B & B | 5` HT. |
| ORNAMENTAL TREE | | | | | | |
| | ALS | 3 | AUTUMN BRILLANCE SERVICEBERRY | AMELANCHIER X GRANDIFLORA `AUTUMN BRILLANCE` | B & B | 6` HT. |
| OVERSTORY TREE | | | | | | |
| | BOL | 3 | BOULEVARD LINDEN | TILIA AMERICANA 'BOULEVARD' | B & B | 2.5" CAL. |
| | HCK | 2 | COMMON HACKBERRY | CELTIS OCCIDENTALIS | B & B | 2.5" CAL. |
| | IHL | 2 | IMPERIAL HONEYLOCUST | GLEDITSIA TRIACANTHOS VAR. INERMIS `IMPERIAL` | B & B | 2.5" CAL. |
| | KCY | 3 | ESPRESSO KENTUCKY COFFEETREE | GYMNOCLADUS DIOICA `ESPRESSO` | B & B | 2.5" CAL. |
| | SWO | 3 | SWAMP WHITE OAK | QUERCUS BICOLOR | B & B | 2.5" CAL. |

| SYMBOL | CODE | QTY | COMMON NAME | BOTANICAL NAME | CONT | SPACING |
|---|---|---|---|---|---|---|
| CONIFEROUS SHRUBS | | | | | | |
| | HZA | 12 | HETZ MIDGET ARBORVITAE | THUJA OCCIDENTALIS `HETZ MIDGET` | #5 CONT. | 3` O.C. |
| | SCJ | 3 | SCANDIA JUNIPER | JUNIPERUS SABINA `SCANDIA` | #5 CONT. | 5` O.C. |
| | SGJ | 20 | SEA GREEN JUNIPER | JUNIPERUS CHINENSIS `SEA GREEN` | #5 CONT. | 5` O.C. |
| | TCA | 4 | TECHNY ARBORVITAE | THUJA OCCIDENTALIS `TECHNY` | #5 CONT. | 5` O.C. |
| | WBM | 35 | MUGO WHITE BUD PINE | PINUS MUGO `WHITE BUD` | #5 CONT. | 3` O.C. |
| DECIDUOUS SHRUBS | | | | | | |
| | ANH | 17 | ANNABELLE HYDRANGEA | HYDRANGEA ARBORESCENS `ANNABELLE` | #5 CONT. | 4` O.C. |
| | BLC | 13 | IROQUOIS BEAUTY BLACK CHOKEBERRY | ARONIA MELANOCARPA `IROQUOIS BEAUTY` TM | #5 CONT. | 4` O.C. |
| | GLS | 30 | GRO-LOW FRAGRANT SUMAC | RHUS AROMATICA `GRO-LOW` | #5 CONT. | 4` O.C. |
| | LDN | 18 | LITTLE DEVIL NINEBARK | PHYSOCARPUS OPULIFOLIUS `DONNA MAY` TM | #5 CONT. | 4` O.C. |
| ORNAMENTAL GRASSES | | | | | | |
| | BAG | 27 | BLONDE AMBITION BLUE GRAMA GRASS | BOUTELOUA GRACILIS `BLONDE AMBITION` | #1 CONT. | 20" O.C. |
| | HMS | 37 | HEAVY METAL SWITCHGRASS | PANICUM VIRGATUM 'HEAVY METAL' | #1 CONT. | 3` O.C. |
| | KFG | 15 | KARL FOERSTER FEATHER REED GRASS | CALAMAGROSTIS X ACUTIFLORA `KARL FOERSTER` | #1 CONT | 18" O.C. |
| PERENNIALS | | | | | | |
| | AFS | 17 | AUTUMN FIRE SEDUM | SEDUM X 'AUTUMN FIRE' | #1 CONT. | 24" O.C. |
| | BJB | 28 | BLUE JEAN BABY RUSSIAN SAGE | PEROVSKIA ATRIPLICIFOLIA 'BLUE JEAN BABY' | #1 CONT. | 3` O.C. |
| | WLC | 11 | WALKER'S LOW CATMINT | NEPETA X FAASSENII 'WALKER'S LOW' | #1 CONT | 30" O.C. |

**NOTE:**
QUANTITIES ON PLAN SUPERSEDE LIST QUANTITIES IN THE EVENT OF A DISCREPANCY.

**ABBREVIATIONS:**
B&B = BALLED AND BURLAPPED CAL. = CALIPER HT. = HEIGHT MIN. = MINIMUM O.C. = ON CENTER SP. = SPECIES QTY. = QUANTITY

## LANDSCAPE NOTES

PLANTING

1. CONTACT COMMON GROUND ALLIANCE AT 811 OR CALL811.COM TO VERIFY LOCATIONS OF ALL UNDERGROUND UTILITIES PRIOR TO INSTALLATION OF ANY PLANTS OR LANDSCAPE MATERIAL.
2. ACTUAL LOCATION OF PLANT MATERIAL IS SUBJECT TO FIELD AND SITE CONDITIONS.
3. NO PLANTING WILL BE INSTALLED UNTIL ALL GRADING AND CONSTRUCTION HAS BEEN COMPLETED IN THE IMMEDIATE AREA.
4. ALL SUBSTITUTIONS MUST BE APPROVED BY THE LANDSCAPE ARCHITECT PRIOR TO SUBMISSION OF ANY BID AND/OR QUOTE BY THE LANDSCAPE CONTRACTOR.
5. PROVIDE TWO YEAR GUARANTEE OF ALL PLANT MATERIALS. THE GUARANTEE BEGINS ON THE DATE OF THE LANDSCAPE ARCHITECT'S OR OWNER'S WRITTEN ACCEPTANCE OF THE INITIAL PLANTING. REPLACEMENT PLANT MATERIAL SHALL HAVE A ONE YEAR GUARANTEE COMMENCING UPON PLANTING.
6. ALL PLANTS TO BE SPECIMEN GRADE, MINNESOTA-GROWN AND/OR HARDY. SPECIMEN GRADE SHALL ADHERE TO, BUT IS NOT LIMITED BY, THE FOLLOWING STANDARDS:
   ALL PLANTS SHALL BE FREE FROM DISEASE, PESTS, WOUNDS, SCARS, ETC.
   ALL PLANTS SHALL BE FREE FROM NOTICEABLE GAPS, HOLES, OR DEFORMITIES.
   ALL PLANTS SHALL BE FREE FROM BROKEN OR DEAD BRANCHES.
   ALL PLANTS SHALL HAVE HEAVY, HEALTHY BRANCHING AND LEAFING.
   CONIFEROUS TREES SHALL HAVE AN ESTABLISHED MAIN LEADER AND A HEIGHT TO WIDTH RATIO OF NO LESS THAN 5:3.
7. PLANTS TO MEET AMERICAN STANDARD FOR NURSERY STOCK (ANSI Z60.1-2014 OR MOST CURRENT VERSION) REQUIREMENTS FOR SIZE AND TYPE SPECIFIED.
8. PLANTS TO BE INSTALLED AS PER MNLA & ANSI STANDARD PLANTING PRACTICES.
9. INSTALL PLANTS BY PLANT INSTALLATION PERIOD INFORMATION IN THE LATEST STANDARD PLANTING DETAILS FROM MNDOT. PLANTINGS BEFORE OR AFTER THESE DATES ARE DONE AT RISK.
10. PLANTS SHALL BE IMMEDIATELY PLANTED UPON ARRIVAL AT SITE. PROPERLY HEEL-IN MATERIALS IF NECESSARY; TEMPORARY ONLY.
11. PRIOR TO PLANTING, FIELD VERIFY THAT THE ROOT COLLAR/ROOT FLARE IS LOCATED AT THE TOP OF THE BALLED & BURLAP TREE. IF THIS IS NOT THE CASE, SOIL SHALL BE REMOVED DOWN TO THE ROOT COLLAR/ROOT FLARE. WHEN THE BALLED & BURLAP TREE IS PLANTED, THE ROOT COLLAR/ROOT FLARE SHALL BE EVEN OR SLIGHTLY ABOVE FINISHED GRADE.
12. OPEN TOP OF BURLAP ON BB MATERIALS; REMOVE POT ON POTTED PLANTS; SPLIT AND BREAK APART PEAT POTS.
13. PRUNE PLANTS AS NECESSARY - PER STANDARD NURSERY PRACTICE AND TO CORRECT POOR BRANCHING OF EXISTING AND PROPOSED TREES.
14. WRAP ALL SMOOTH-BARKED TREES - FASTEN TOP AND BOTTOM. REMOVE BY APRIL 1ST.
15. STAKING OF TREES AS REQUIRED; REPOSITION, PLUMB AND STAKE IF NOT PLUMB AFTER ONE YEAR.

SOIL

16. THE NEED FOR SOIL AMENDMENTS SHALL BE DETERMINED UPON SITE SOIL CONDITIONS PRIOR TO PLANTING. LANDSCAPE CONTRACTOR SHALL NOTIFY LANDSCAPE ARCHITECT FOR THE NEED OF ANY SOIL AMENDMENTS.
17. BACKFILL SOIL AND TOPSOIL TO ADHERE TO MNDOT STANDARD SPECIFICATION 3877 (LOAM TOPSOIL BORROW) AND TO BE EXISTING TOP SOIL FROM SITE FREE OF ROOTS, ROCKS LARGER THAN ONE INCH, SUBSOIL DEBRIS, AND LARGE WEEDS UNLESS SPECIFIED OTHERWISE. MINIMUM 4" DEPTH TOPSOIL FOR ALL LAWN GRASS AREAS AND 12" DEPTH TOPSOIL FOR TREE, SHRUBS, AND PERENNIALS.

MULCH

18. MULCH TO BE AT ALL TREE, SHRUB, PERENNIAL, AND MAINTENANCE AREAS. TREE AND SHRUB PLANTING BEDS SHALL HAVE 4" DEPTH OF DOUBLE SHREDDED HARDWOOD MULCH. DOUBLE SHREDDED HARDWOOD MULCH TO BE USED AROUND ALL PLANTS WITHIN TURF AREAS. PERENNIAL AND ORNAMENTAL GRASS BEDS SHALL HAVE 2" DEPTH DOUBLE SHREDDED HARDWOOD MULCH. MULCH TO BE FREE OF DELETERIOUS MATERIAL AND NATURAL IN COLOR (DYE-FREE), OR APPROVED EQUAL. ROCK MULCH TO BE TRAP ROCK, BUFF LIMESTONE, RIVER ROCK, 1 1/2" DIAMETER, AT MINIMUM 4" DEPTH, OR APPROVED EQUAL. APPLY PRE-EMERGENT HERBICIDE PRIOR TO MULCH PLACEMENT PER MANUFACTURER RECOMMENDATIONS, USE PREEN OR PRE-APPROVED EQUAL. ROCK MULCH TO BE ON COMMERCIAL GRADE FILTER FABRIC, BY TYPAR, OR APPROVED EQUAL WITH NO EXPOSURE. MULCH AND FABRIC TO BE APPROVED BY OWNER PRIOR TO INSTALLATION. MULCH TO MATCH EXISTING CONDITIONS (WHERE APPLICABLE).

EDGER

19. EDGING TO BE COMMERCIAL GRADE COL-MET (OR EQUAL) STEEL EDGING; 3/16" THICK x 5" TALL, COLOR BLACK, OR SPADED EDGE, AS INDICATED. STEEL EDGING SHALL BE PLACED WITH SMOOTH CURVES AND STAKED WITH METAL SPIKES NO GREATER THAN 4 FOOT ON CENTER WITH TOP OF EDGER AT GRADE, FOR MOWERS TO CUT ABOVE WITHOUT DAMAGE. UTILIZE CURBS AND SIDEWALKS FOR EDGING WHERE POSSIBLE. WHERE EDGING TERMINATES AT A SIDEWALK, BEVEL OR RECESS ENDS TO PREVENT TRIP HAZARD. SPADED EDGE TO PROVIDE V-SHAPED DEPTH AND WIDTH TO CREATE SEPARATION BETWEEN MULCH AND GRASS. INDIVIDUAL TREE, SHRUB, OR RAIN-GARDEN BEDS TO BE SPADED EDGE, UNLESS NOTED OTHERWISE. EDGING TO MATCH EXISTING CONDITIONS (WHERE APPLICABLE).

SEED/SOD

20. ALL DISTURBED AREAS TO BE SODDED OR SEEDED, UNLESS OTHERWISE NOTED. SOD TO BE STANDARD MINNESOTA GROWN AND HARDY BLUEGRASS MIX, FREE OF LAWN WEEDS. ALL TOPSOIL AREAS TO BE RAKED TO REMOVE DEBRIS AND ENSURE DRAINAGE. SLOPES OF 3:1 OR GREATER SHALL BE STAKED. SEED AS SPECIFIED, PER MNDOT SPECIFICATIONS AND SUPPLIER/MANUFACTURER RECOMMENDATIONS. IF NOT INDICATED ON LANDSCAPE PLAN, SEE EROSION CONTROL PLAN.

IRRIGATION

21. PROVIDE IRRIGATION TO ALL PLANTED AREAS ON SITE. IRRIGATION SYSTEM TO BE DESIGN/BUILD BY LANDSCAPE CONTRACTOR. LANDSCAPE CONTRACTOR TO PROVIDE SHOP DRAWINGS TO LANDSCAPE ARCHITECT FOR APPROVAL PRIOR TO INSTALLATION OF IRRIGATION SYSTEM. CONTRACTOR TO PROVIDE OPERATION MANUALS, AS-BUILT PLANS, AND NORMAL PROGRAMMING. SYSTEM SHALL BE WINTERIZED AND HAVE SPRING STARTUP DURING FIRST YEAR OF OPERATION. SYSTEM SHALL HAVE ONE-YEAR WARRANTY ON ALL PARTS AND LABOR. ALL INFORMATION ABOUT INSTALLATION AND SCHEDULING CAN BE OBTAINED FROM THE GENERAL CONTRACTOR. SYSTEM SHALL INCLUDE A RAIN SENSOR AND APPROPRIATE TECHNOLOGY. CONTROLLER TO BE COMMERCIAL GRADE, EPA WATERSENSE APPROVED, CAPABLE OF FLOW SENSING AND OPERATING A MASTER VALVE ON / OFF BY STATION. IRRIGATION SYSTEM TO INCLUDE FLOW SENSOR AND WIRED RAIN / FREEZE SENSOR. PROVIDE MASTER VALVE. THE IRRIGATION SYSTEM SHALL BE INSTALLED PER MANUFACTURER'S SPECIFICATIONS. ZONE PARAMETERS: HEAD-TO-HEAD COVERAGE AND NO SPRAYING OVER WALKS. SEPARATE LAWN ZONES BY MICROCLIMATE- LAWN ON NORTH SIDE OF BUILDING VS LAWN ON SOUTH SIDE OF BUILDING, LAWN ON SLOPE VS LAWN ON LEVEL GRADE. LAWN AREAS TO HAVE MULTI-STREAM ROTARY SPRINKLERS/ SPRAYS/ ROTORS. SHRUB AND PERENNIAL BED AREAS TO HAVE DRIP. TREES IN LAWN AREA TO BE COVERED BY MULTI-STREAM ROTARY SPRINKLERS/ SPRAYS/ ROTORS. TREES IN SHRUBS / PERENNIAL BED AREA TO BE WATERED WITH DRIP IRRIGATION. ALL IRRIGATION HEADS TO BE PRESSURE REGULATED.

ESTABLISHMENT

22. PROVIDE NECESSARY WATERING OF PLANT MATERIALS UNTIL THE PLANT IS FULLY ESTABLISHED OR IRRIGATION SYSTEM IS OPERATIONAL. OWNER WILL NOT PROVIDE WATER FOR CONTRACTOR.
23. REPAIR, REPLACE, OR PROVIDE SOD/SEED AS REQUIRED FOR ANY ROADWAY BOULEVARD AREAS ADJACENT TO THE SITE DISTURBED DURING CONSTRUCTION.

WARRANTY

24. REPAIR ALL DAMAGE TO PROPERTY FROM PLANTING OPERATIONS AT NO COST TO OWNER.
25. MAINTAIN TREES, SHRUBS, SEED AND OTHER PLANTS UNTIL PROJECT COMPLETION, BUT IN NO CASE, LESS THAN FOLLOWING PERIOD; 1 YEAR AFTER PROJECT COMPLETION. MAINTAIN TREES, SHRUBS, SEED AND OTHER PLANTS BY PRUNING, CULTIVATING, AND WEEDING AS REQUIRED FOR HEALTHY GROWTH. RESTORE PLANTING SAUCERS. TIGHTEN AND REPAIR STAKE AND GUY SUPPORTS AND RESET TREES AND SHRUBS TO PROPER GRADES OR VERTICAL POSITION AS REQUIRED. RESTORE OR REPLACE DAMAGED WRAPPINGS. SPRAY AS REQUIRED TO KEEP TREES AND SHRUBS FREE OF INSECTS AND DISEASE. REPLENISH MULCH TO THE REQUIRED DEPTH. MAINTAIN LAWNS FOR 60 DAYS AFTER INSTALLING SOD INCLUDING MOWING WHEN SOD RECITES 4" IN HEIGHT. WEED PLANTING BEDS AND MULCH SAUCERS AT MINIMUM ONCE A MONTH DURING THE GROWING SEASON. PROVIDE A MONTHLY REPORT TO THE OWNER ON WEEDING AND OTHER MAINTENANCE RESPONSIBILITIES.

PRELIMINARY - NOT FOR CONSTRUCTION

| No. | REVISIONS | DATE | BY |
|---|---|---|---|

Kimley»Horn
© 2026 KIMLEY-HORN AND ASSOCIATES, INC.
11995 SINGLETREE LN, SUITE 225, EDEN PRAIRIE, MN 55344
PHONE: 612-315-1272
WWW.KIMLEY-HORN.COM

I HEREBY CERTIFY THAT THIS PLAN, SPECIFICATION OR REPORT WAS PREPARED BY ME OR UNDER MY DIRECT SUPERVISION AND THAT I AM A DULY LICENSED PROFESSIONAL LANDSCAPE ARCHITECT UNDER THE LAWS OF THE STATE OF MINNESOTA.

RYAN A. HYLLESTED, PLA
MN
LIC. NO. 53828
DATE: 01/28/2026

| KHA PROJECT | |
|---|---|
| 161369000 | |
| DATE | 01/28/2026 |
| SCALE | AS SHOWN |
| DESIGNED BY | KHA |
| DRAWN BY | KHA |
| CHECKED BY | RAH |

# LANDSCAPE DETAILS

**PANERA - COTTAGE GROVE**
PREPARED FOR
**CA COMMERCIAL**
COTTAGE GROVE MN

SHEET NUMBER
**L101**

| REVISIONS | | |
|---|---|---|
| Rev # | Date | BY: |

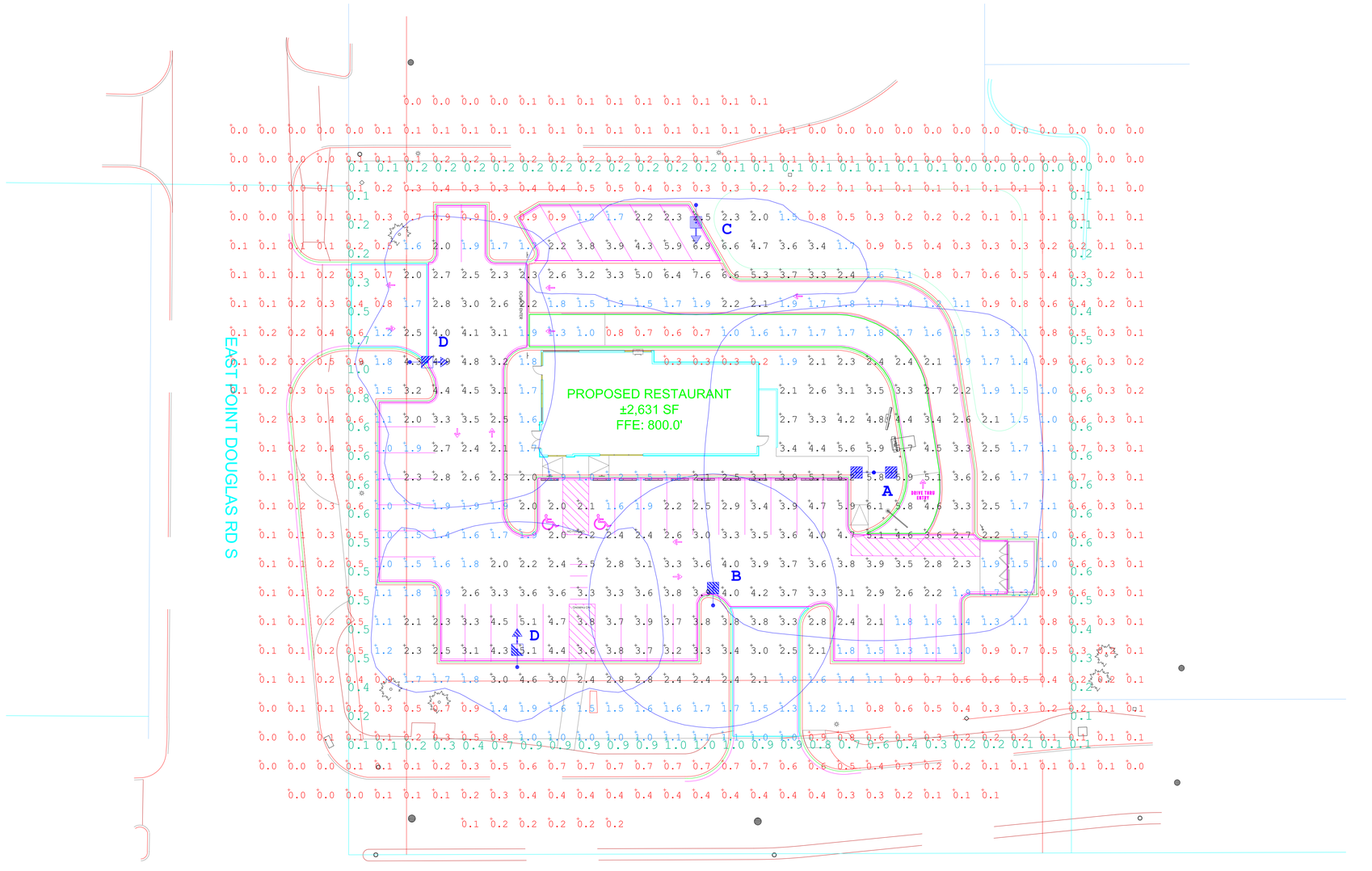


Based on the information provided, all dimensions and luminaire locations shown represent recommended positions. The engineer and/or architect must determine applicability of the layout to existing or future field conditions.

This lighting pattern represents illumination levels calculated from laboratory data taken under controlled conditions utilizing current industry standard lamp ratings in accordance with Illuminating Engineering Society approved methods. Actual performance of any manufacturer's luminaire may vary due to variation in electrical voltage, tolerance in lamps and other variable field conditions.

Calculation Summary

| Label | Units | Avg | Max | Min | Avg/Min | Max/Min | PtSpcLr | PtSpcTb |
|---|---|---|---|---|---|---|---|---|
| PROPERTY LINE | Fc | 0.39 | 1.0 | 0.0 | N.A. | N.A. | 10 | N.A. |
| DRIVE | Fc | 2.69 | 7.6 | 1.2 | 2.24 | 6.33 | 10 | 10 |
| DRIVE THRU | Fc | 2.32 | 5.1 | 0.6 | 3.87 | 8.50 | | |
| ENTRANCE DRIVES | Fc | 1.89 | 3.8 | 0.7 | 2.70 | 5.43 | | |
| PARKING | Fc | 2.93 | 6.9 | 0.9 | 3.26 | 7.67 | | |

Luminaire Schedule

WLS19059 PANERA COTTAGE GROVE, MN PM: HOLLY PLEASE EMAIL US FOR PRICING AT HOLLY@WLSLIGHTING.COM

| Symbol | Qty | Label | Lum. Lumens | LLF | Description | Lum. Watts |
|---|---|---|---|---|---|---|
| | 1 | A | 20431 | 0.950 | WLS-SL2-A1-18K-SM-40-70-T5-SLW 25' MOUNTING HEIGHT | 134.5 |
| | 1 | B | 20431 | 0.950 | WLS-SL2-A1-18K-SM-40-70-T5-SLW 25' MOUNTING HEIGHT | 134.5 |
| | 1 | C | 15379 | 0.950 | WLS-SL2-A1-32K-MD-40-70-T4-BLS-SLW 25' MOUNTING HEIGHT | 225.48 |
| | 2 | D | 19443 | 0.950 | WLS-SL2-A1-18K-SM-40-70-T4-SLW 25' MOUNTING HEIGHT | 134.5 |


6820 CORPORATION PKWY
FORT WORTH, TX 76126
WWW.WLSLIGHTING.COM

WLS LIGHTING + ELECTRICAL

817-731-0020


PM:HOLLY

BY: J.P.

SHEET 1 OF 1

PANERA
COTTAGE GROVE, MN

WLS-19059

DATE -1/19/26

SCALE: 1"=20'

# PROPOSED FLOOR PLAN

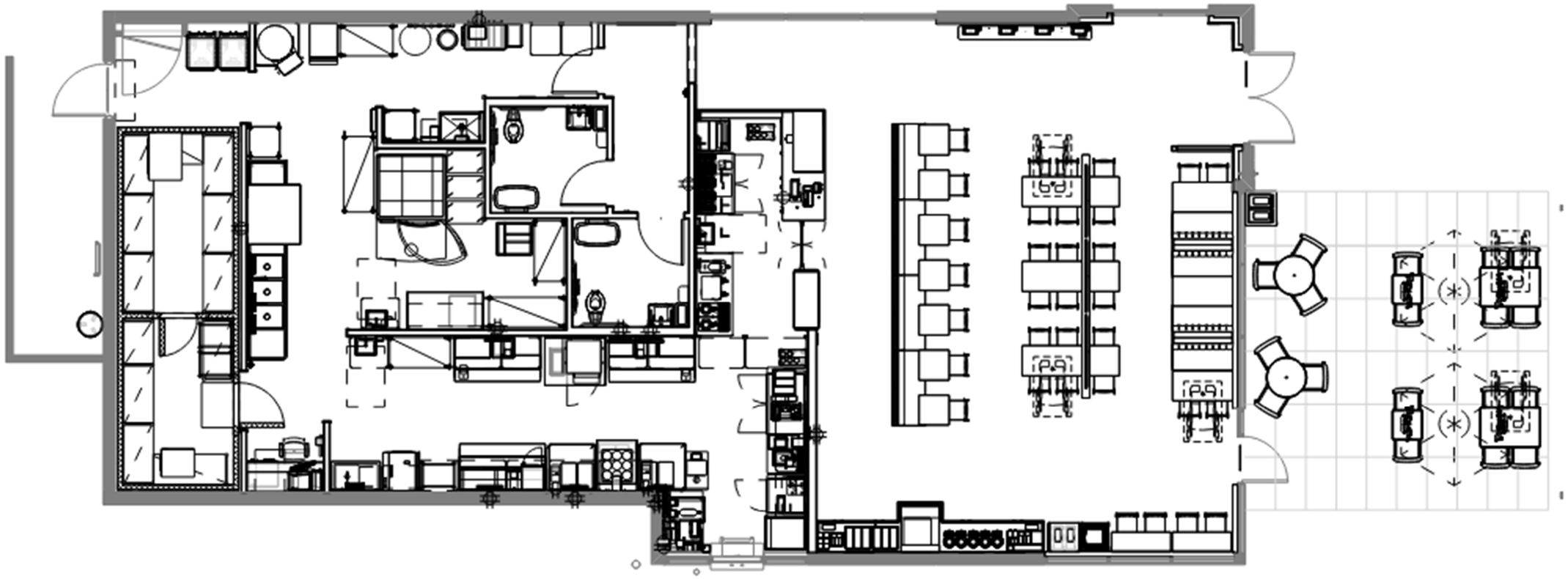

# EXTERIOR ELEVATIONS

| ELEVATION PERCENTAGES | |
|---|---|
| WINDOWS: | 35% |
| EIFS: | 0% |
| BRICK: | 41% |
| GREEN: | 23% |
| CANOPY: | 1% |

TOTAL BUILDING
4,053 SF TOTAL

65% MIN GRADE A MATERIALS REQUIRED (BRICK + GLASS)

**REQUIRED: 2,634 SF (65%)**

**PROVIDED: 2,683 SF (66%)**

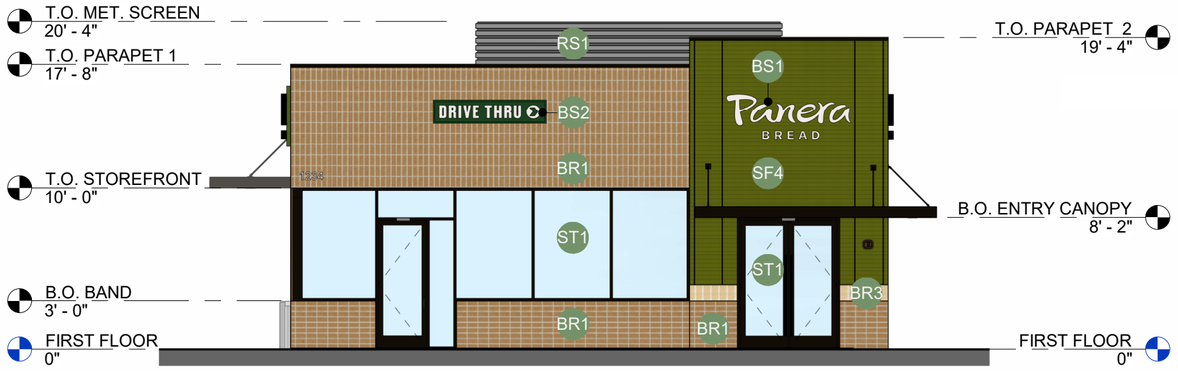


## FRONT ELEVATION

| ELEVATION PERCENTAGES | |
|---|---|
| WINDOWS: | 12% |
| EIFS: | 20% |
| BRICK: | 66% |
| GREEN: | 1% |
| CANOPY: | 1% |

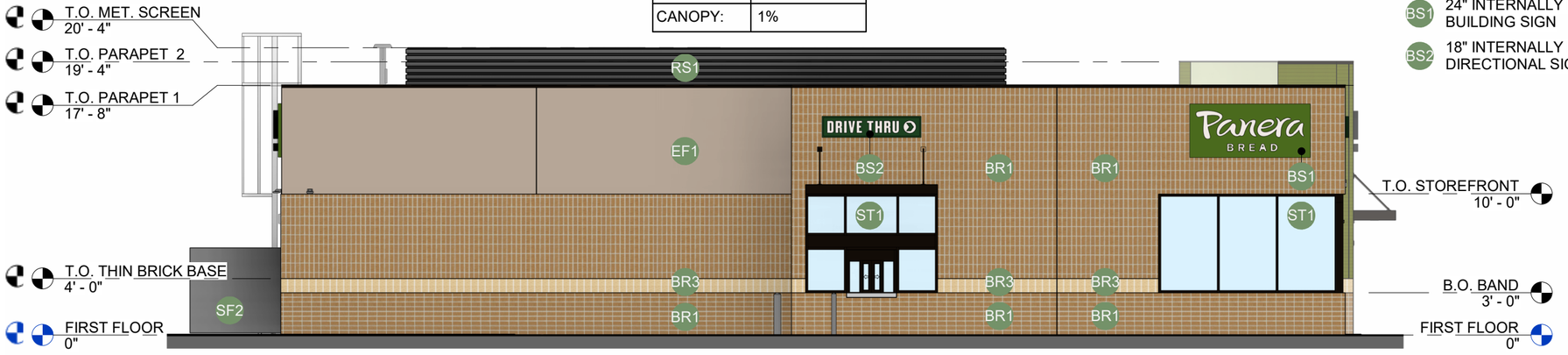


## DRIVE THRU ELEVATION

## EXTERIOR MATERIALS

- BR1 — THIN BRICK MASONRY, TABS WALL SYSTEM | PATTERN: HORIZONTAL OR VERTICAL STACKED BOND (SEE ELEVATIONS) | SIZE: UTILITY | SUPPLIER: CREATIVE MATERIALS | MFR: MCNEAR | COLOR: SANTIAGO CREATE MATERIALS CUSTOM BLEND
- BR3 — THIN BRICK MASONRY BAND, TABS WALL SYSTEM | PATTERN: VERTICAL STACKED BOND (SEE ELEVATIONS) | SIZE: UTILITY | SUPPLIER: CREATIVE MATERIALS | MFR: ENDICOTT | COLOR: GOLDEN BUFF
- EF1 — EXTERIOR INSULATION FINISH SYSTEM, SUPPLIER: DRYVIT "OUTSULATION PLUS MD" W/ MOISTURE DRAINAGE SYSTEM | COLOR: #105 SUEDE | TEXTURE: DRYVIT "LYMESTONE" DPR TEXTURED FINISH
- SF2 — SPECIALITY FINISH: UTILITY SCREEN + TRASH GATE COMPOSITE PLANK SCREEN WALL | SUPPLIER: GC | MFR: TREX | STYLE: TREX | COLOR: PEBBLE GRAY
- SF4 — SPECIALITY FINISH: RIBBED FIBER CEMENT PANEL WALL PANELS | SUPPLIER: NICHIHA | MFR: NICHIHA | STYLE: RIBBED DIMENSION SERIES | COLOR: PANERA GREEN TO MATCH PANTONE PMS 2307 C
- ST1 — ALUMINUM STOREFRONT SYSTEM: MFR: KAWNEER, TRIFAB VERSAGLAZE 451T | COLOR: DARK BRONZE | SIZE: 2" x 4 1/2" PROFILE w/ THERMAL BREAK | GLAZING: 1" INSULATED GLAZING | MFR: PPG, SOLARBAN 70 LOW-E, 1" INSULATED (OR EQUAL)
- ST2 — ALUMINUM STOREFRONT SYSTEM: ALTERNATE - ONLY AS REQUIRED | MFR: KAWNEER TRIFAB VERSAGLAZE 451T | COLOR: CLEAR ANODIZED | 2" x 4 1/2" PROFILE w/ THERMAL BREAK | GLAZING: 1" INSULATED GLAZING | MFR: PPG SOLARBAN 70 (OR EQUAL)
- RS1 — PREMANUFACTURED ROOF SCREEN (ONLY NEEDED WHEN REQ'D BY MUNICIPALITY) | MFR: ROOFSCREEN MANUFACTURING | STYLE: 7.2 RIB PANEL HORIZONTAL | COLOR: CHARCOAL (OR APPROVED EQUAL)
- BS1 — 24" INTERNALLY ILLUMINATED WALL MOUNTED BUILDING SIGN
- BS2 — 18" INTERNALLY ILLUMINATED WALL MOUNTED DIRECTIONAL SIGN

**PANERA BREAD | COTTAGE GROVE, MN**

COMMERCIAL DEVELOPMENT

GPD GROUP, INC.

# EXTERIOR ELEVATIONS

| ELEVATION PERCENTAGES | |
|---|---|
| WINDOWS: | 1% |
| EIFS: | 38% |
| BRICK: | 57% |
| GREEN: | 1% |
| CANOPY: | 0% |

TOTAL BUILDING
4,053 SF TOTAL
65% MIN GRADE A MATERIALS REQUIRED (BRICK + GLASS)
**REQUIRED: 2,634 SF (65%)**
**PROVIDED: 2,683 SF (66%)**

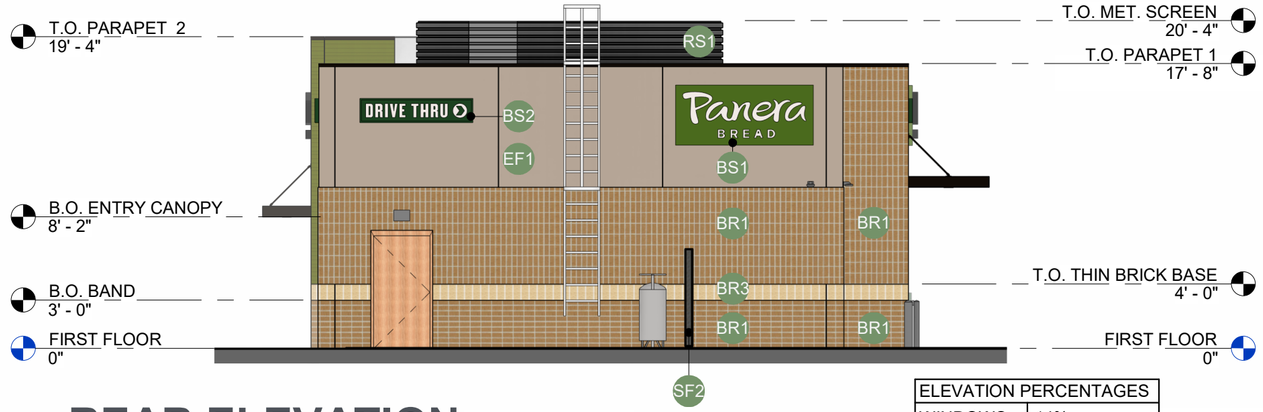


## REAR ELEVATION

| ELEVATION PERCENTAGES | |
|---|---|
| WINDOWS: | 14% |
| EIFS: | 36% |
| BRICK: | 38% |
| GREEN: | 11% |
| CANOPY: | 1% |

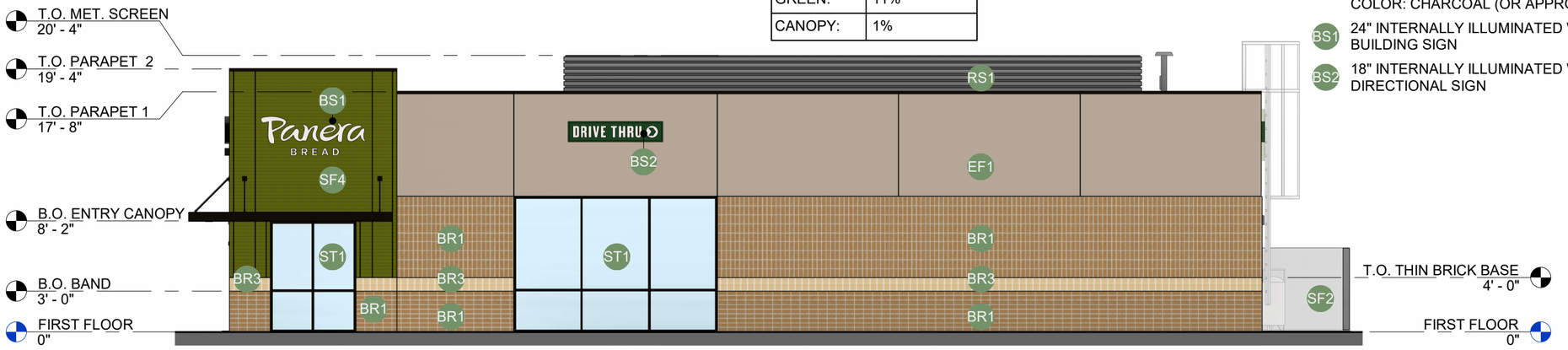


## SIDE ELEVATION

## EXTERIOR MATERIALS

- **BR1** THIN BRICK MASONRY, TABS WALL SYSTEM | PATTERN: HORIZONTAL OR VERTICAL STACKED BOND (SEE ELEVATIONS) | SIZE: UTILITY | SUPPLIER: CREATIVE MATERIALS | MFR: MCNEAR | COLOR: SANTIAGO CREATE MATERIALS CUSTOM BLEND
- **BR3** THIN BRICK MASONRY BAND, TABS WALL SYSTEM | PATTERN: VERTICAL STACKED BOND (SEE ELEVATIONS) | SIZE: UTILITY | SUPPLIER: CREATIVE MATERIALS | MFR: ENDICOTT | COLOR: GOLDEN BUFF
- **EF1** EXTERIOR INSULATION FINISH SYSTEM, SUPPLIER: DRYVIT "OUTSULATION PLUS MD" W/ MOISTURE DRAINAGE SYSTEM | COLOR: #105 SUEDE | TEXTURE: DRYVIT "LYMESTONE" DPR TEXTURED FINISH
- **SF2** SPECIALITY FINISH: UTILITY SCREEN + TRASH GATE COMPOSITE PLANK SCREEN WALL | SUPPLIER: GC | MFR: TREX | STYLE: TREX | COLOR: PEBBLE GRAY
- **SF4** SPECIALITY FINISH: RIBBED FIBER CEMENT PANEL WALL PANELS | SUPPLIER: NICHIHA | MFR: NICHIHA | STYLE: RIBBED DIMENSION SERIES | COLOR: PANERA GREEN TO MATCH PANTONE PMS 2307 C
- **ST1** ALUMINUM STOREFRONT SYSTEM: MFR: KAWNEER, TRIFAB VERSAGLAZE 451T | COLOR: DARK BRONZE | SIZE: 2" x 4 1/2" PROFILE w/ THERMAL BREAK | GLAZING: 1" INSULATED GLAZING | MFR: PPG, SOLARBAN 70 LOW-E, 1" INSULATED (OR EQUAL)
- **ST2** ALUMINUM STOREFRONT SYSTEM: ALTERNATE - ONLY AS REQUIRED | MFR: KAWNEER TRIFAB VERSAGLAZE 451T | COLOR: CLEAR ANODIZED | 2" x 4 1/2" PROFILE w/ THERMAL BREAK | GLAZING: 1" INSULATED GLAZING | MFR: PPG SOLARBAN 70 (OR EQUAL)
- **RS1** PREMANUFACTURED ROOF SCREEN (ONLY NEEDED WHEN REQ'D BY MUNICIPALITY) | MFR: ROOFSCREEN MANUFACTURING | STYLE: 7.2 RIB PANEL HORIZONTAL | COLOR: CHARCOAL (OR APPROVED EQUAL)
- **BS1** 24" INTERNALLY ILLUMINATED WALL MOUNTED BUILDING SIGN
- **BS2** 18" INTERNALLY ILLUMINATED WALL MOUNTED DIRECTIONAL SIGN

Panera BREAD
COMMERCIAL DEVELOPMENT

**PANERA BREAD | COTTAGE GROVE, MN**

GPD GROUP, INC.

# TRASH ENCLOSURE

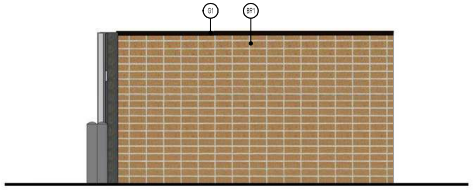

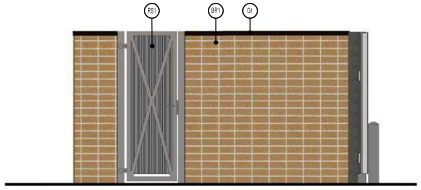

**EXTERIOR MATERIALS**

BR1 THIN BRICK MASONRY, TABS WALL SYSTEM | PATTERN: HORIZONTAL OR VERTICAL STACKED BOND (SEE ELEVATIONS) | SIZE: UTILITY | SUPPLIER: CREATIVE MATERIALS | MFR: MCNEAR | COLOR: SANTIAGO CREATE MATERIALS CUSTOM BLEND

G1 ALUMINUM STOREFRONT SYSTEM/COPING: MFR: KAWNEER, TRIFAB VERRSAGLAZE 451T | COLOR: DARK BRONZE | SIZE: 2" x 4 1/2" PROFILE w/ THERMAL BREAK | GLAZING: 1" INSULATED GLAZING | MFR: PPG, SOLARBAN 70 LOW-E, 1" INSULATED (OR EQUAL)

SB1 SPECIALITY FINISH: UTILITY SCREEN + TRASH GATE COMPOSITE PLANK SCREEN WALL | SUPPLIER: GC | MFR: TREX | STYLE: TREX | COLOR: PEBBLE GRAY

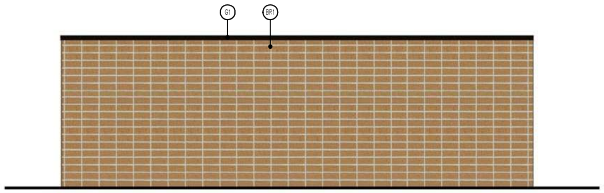

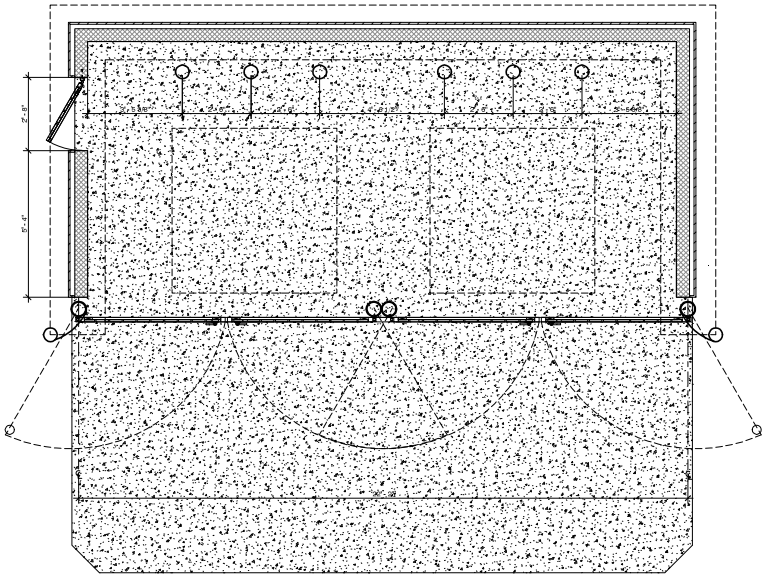


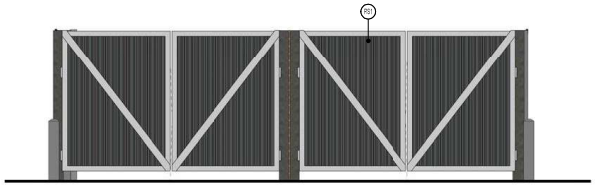

**PANERA BREAD | COTTAGE GROVE, MN**

# S01 (2) Flex Faces for Pylon Header

## Header Cabinet

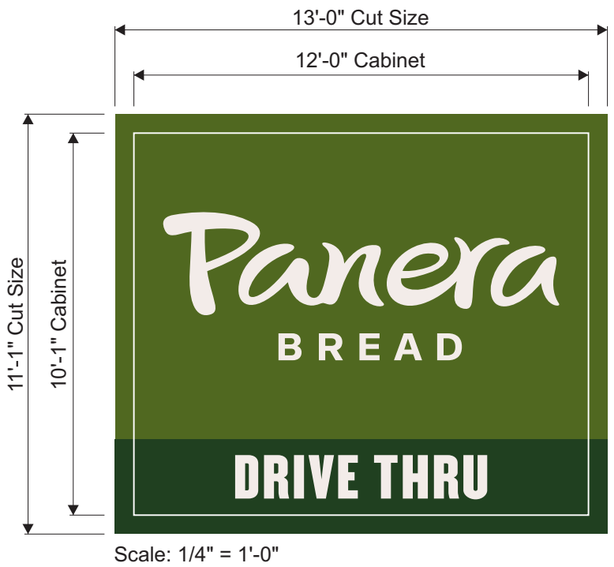


Scale: 1/4" = 1'-0"

### Top Cabinet: (2) Flex Face Tenant Panels

- Manufacture new face replacements for both sides of existing DF pylon sign as shown.
- On site removal and properly dispose of existing faces and install new faces.
- Paint pole & header cabinet black

| | |
|---|---|
| | Face Material: 3M Panagraphics III White Flex Face Substrate |
| | Copy: Digitally printed to match PMS 9285 |
| | Background: Digitally printed to match PMS 2280 |
| | Background: Digitally printed to match PMS 2411 |
| | Pole & Cabinet: Painted Black |

Existing Conditions

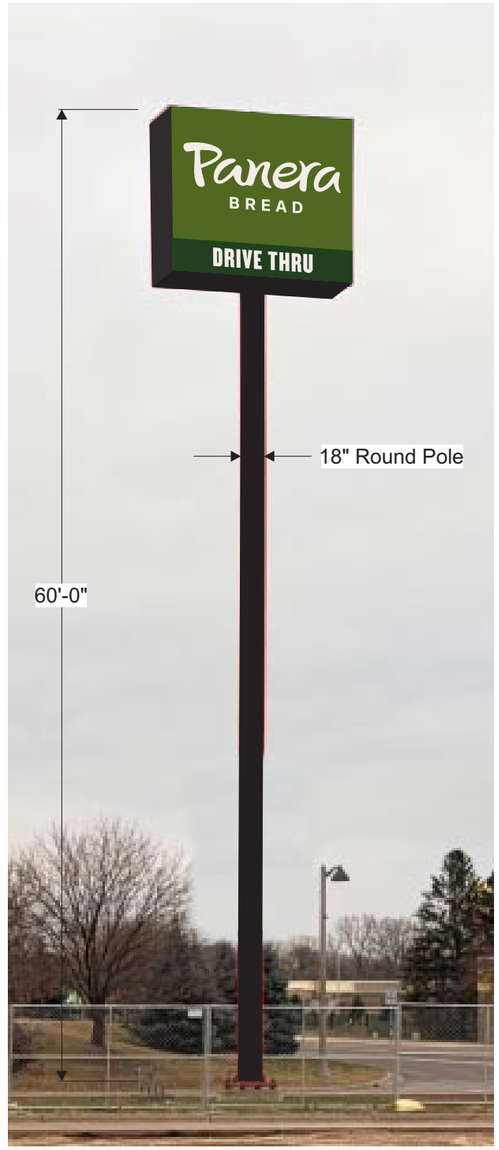


Proposed

atlas BRANDING THE WORLD
National Headquarters: 1077 West Blue Heron Blvd.
West Palm Beach, Florida 33404
800.772.7932
www.atlasbtw.com

| Revisions: | |
|---|---|
| 01/27/2026 RW - added measurements & additional option | ... |
| 02/10/2026 RW - removed lower cabinet & readerboard | ... |
| ... | ... |
| ... | ... |
| ... | ... |

Panera BREAD

| | | | |
|---|---|---|---|
| PM: Tyler N. | Address: 7162 East Point Douglas Rd. | | |
| Drawn By: RW | City State: Cottage Grove, MN 55016 | | |
| Date: 01/23/2026 | Drawing #: 240381 | Page #: | 1 |

# Stormwater Management Plan

Panera – Cottage Grove
Washington County, MN

City of Cottage Grove

Prepared for:
CA Commercial Development

Prepared by:
Kimley-Horn
11995 Singletree Lane, Suite 225
Eden Prairie, MN 55344
Contact: Matthew Lingam

Prepared On: 01/28/2026

# Stormwater Management Report

**for**

## Panera – Cottage Grove

**Prepared for:**

## CA Commercial Development

## 01/28/2026

**Prepared By:**

**Kimley-Horn and Associates, Inc.**
**11995 Singletree Lane, Suite 225**
**Eden Prairie, MN 55344**

I hereby certify that this plan, specification, or report was prepared by me or under my direct supervision and that I am a duly Registered Professional Engineer under the laws of the State of Minnesota.

_____

Brian M. Wurdeman, P.E.

Date: 01/28/2026 Registration No. 53113

Kimley»Horn

## Table of Contents


**1.0 Introduction ..... 4**
**2.0 Pre-development Conditions ..... 4**
**3.0 Post-development Conditions ..... 5**
**4.0 Rate Control Summary ..... 5**
**5.0 Volume Control Summary ..... 6**
**6.0 Water Quality Summary ..... 6**
**7.0 Conclusion ..... 7**
**Exhibits ..... 8**
Exhibit 1. Existing Drainage Exhibit ..... 9
Exhibit 2. Proposed Drainage Exhibit ..... 10
**Appendices ..... 11**
Appendix 2. Pre-Development HydroCAD Model Analysis ..... 13
Appendix 3. Post-Development HydroCAD Model Analysis ..... 14
Appendix 4. Pre-Development MIDS Model Analysis ..... 15
Appendix 5. Post-Development MIDS Model Analysis ..... 16
Appendix 6. Geotechnical Report (PENDING) ..... 17
Appendix 7. Grading and Drainage Plan and Drainage Details ..... 18

# 1.0 Introduction

CA Commercial Development is proposing to redevelop the existing Speedway site located at 7162 East Point Douglas Road South in Cottage Grove, MN. The existing site is occupied by a Speedway Gas Station, which includes pumps, canopies, a building, support structures, and utilities. It's to be noted that the underground tanks have been removed from the site under a different project. Currently, the site does not have stormwater treatment and is proposed to be completely demolished and repurposed for use as a Panera.

The lots immediately surrounding this site include MSI Manufacturing Solutions, Huntington Bank, Hy-Vee, and Las Margaritas Mexican Restaurant. The total drainage study area consists of 1.29 acres. HydroCAD 10.2 and NOAA Atlas 14 runoff depths were used to analyze existing and proposed stormwater conditions for the redeveloped site. The proposed development has been evaluated to meet or exceed the guidelines set forth by the City of Cottage Grove, South Washington Watershed District, Minnesota Pollution Control Agency (MPCA), and the National Pollutant Discharge Elimination System (NPDES).

# 2.0 Pre-development Conditions

The existing roof is slightly pitched to the northeast, with roof drains extending off the back of the building. These roof drains discharge to grade and follow the natural drainage patterns of the ground, which flow outside the drainage study area. The runoff northwest of the existing curb up to the property line also flows off-site, as does everything southwest of the driveway inlets. The remaining site drainage is directed to the inlets located in the southwest access drives. Any runoff discharged to E. Point Douglas Rd S is captured in an inlet in the south corner of the site along the road's curb and gutter, which connects with the access drive inlets.

A summary of the pervious and impervious coverage for existing conditions is included below:

- *Total project area = 1.29 acres*
    - *Existing Pervious Area = 0.38 acres (29.46%)*
    - *Existing Impervious Area = 0.91 acres (70.54%)*
    - *Weighted Curve Number (CN) = 91*

## 3.0 Post-development Conditions

The developed site will be graded to include a series of low points throughout to capture all on-site drainage into a stormwater conveyance system, which will then be routed to the north corner of the site to a stormwater treatment facility. All roof drains from the proposed facility will be captured internally and conveyed underground to tie into the stormwater conveyance system. This updated grading will result in more on-site drainage being captured than previously designed, reducing runoff onto neighboring properties and adjacent stormwater systems. It is also proposed that there will be a net decrease in impervious area in the total project area, thereby producing less runoff than before.

A summary of the pervious and impervious coverage for proposed conditions is included below.

- *Total project area = 1.29 acres*
- *Disturbed area = 1.19 acres*
    - *Proposed Pervious Area = 0.53 acres (41.09%)*
    - *Proposed Impervious Area = 0.76 acres (58.91%)*
    - *Weighted Curve Number (CN) = 88*

## 4.0 Rate Control Summary

The proposed impervious area of the site is less than the existing area; therefore, further analysis on Rate Control is not required. If Rate Control Analysis becomes necessary at a later date, it can be provided.

| EXISTING CONDITIONS RUNOFF RATES (CFS) | | | |
|---|---|---|---|
| | 2-YR (2.79") | 10-YR (4.15") | 100-YR (7.40") |
| PEAK DISCHARGE TO CITY SYSTEM | 3.54 | 5.54 | 10.26 |
| PROPOSED CONDITIONS RUNOFF RATES (CFS) | | | |
| | 2-YR (2.79") | 10-YR (4.15") | 100-YR (7.40") |
| PEAK DISCHARGE TO CITY SYSTEM | 0.82 | 4.26 | 9.24 |

| EXISTING CONDITIONS RUNOFF RATES (CFS) | | | |
|---|---|---|---|
| | 2-YR (2.79") | 10-YR (4.15") | 100-YR (7.40") |
| PEAK DISCHARGE OFFSITE | 0.67 | 1.22 | 2.78 |
| PROPOSED CONDITIONS RUNOFF RATES (CFS) | | | |
| | 2-YR (2.79") | 10-YR (4.15") | 100-YR (7.40") |
| PEAK DISCHARGE OFFSITE | 0.58 | 1.13 | 2.51 |

| EXISTING CONDITIONS RUNOFF RATES (CFS) | | | |
|---|---|---|---|
| | 2-YR (2.79") | 10-YR (4.15") | 100-YR (7.40") |
| PEAK DISCHARGE OVERALL | 4.20 | 6.81 | 13.04 |
| PROPOSED CONDITIONS RUNOFF RATES (CFS) | | | |
| | 2-YR (2.79") | 10-YR (4.15") | 100-YR (7.40") |
| PEAK DISCHARGE OVERALL | 1.00 | 5.24 | 11.63 |

## 5.0 Volume Control Summary

Based on the summary provided and attached to the appendix of this report, volume control is not required for this project by either the NPDES Construction Stormwater Permit or the South Washington Watershed District.

## 6.0 Water Quality Summary

Due to the existing soil conditions on the site, the previous use of the property, and its proximity to the wellhead protection 10-year composite groundwater capture zone, filtration techniques will be used to achieve water quality standards.

For all redeveloped areas, the City of Cottage Grove mandates a net reduction in stormwater discharge volume and total suspended solids (TSS) compared to pre-project conditions. Total phosphorus (TP) must be limited to a maximum loading rate of 0.22 lbs/ac/yr or the existing loading rates, whichever is lower.

**Water Quality Volume**

*Re-developed required water quality volume = 1.1" x 0.76 AC x 43560 SF x 1/12 =* ***3034.68 CF***

*Top of weir wall = 796.72' – Provided Storage =* ***3,044 CF***

| | ALLOWABLE LOADING RATE (LBS/YR) | EXISTING LOADING (LBS/YR) | PROPOSED LOADING (LBS/YR) | LOAD RETAINED (LBS/YR) | PRECENT RETAINED (%) |
|---|---|---|---|---|---|
| TSS | 0.2838 | 1.8335 | 0.8213 | 0.5601 | 40% |
| TP | 333.10 | 333.10 | 62.74 | 188.21 | 75% |

## 7.0 Conclusion

All requirements stated in this report are able to be met or exceeded, except for phosphorus removals. Due to the low allowable loading rate and the proposed BMP type, the site is projected to exceed this limit by 0.5375 lbs/yr. The developer will need to work with the City to purchase credits to offset this difference. As of this report, a geotechnical evaluation of the site has not been completed. If the soils in the area are sandy and infiltration practices can be considered, this report will need to be updated to accommodate that design, which will help reduce the proposed phosphorus loading.

# Exhibits

# Exhibit 1. Existing Drainage Exhibit

K:\TCW_LDEV\ca commercial\cottage grove, mn\3 Design\CAD\Exhibits\2025-0127 - DA Exhibits\EX-1 & EX-2 Drainage Areas.dwg January 27, 2026 - 9:36pm
This document, together with the concepts and designs presented herein, as an instrument of service, is intended only for the specific purpose and client for which it was prepared. Reuse of and improper reliance on this document without written authorization and adaptation by Kimley-Horn and Associates, Inc. shall be without liability to Kimley-Horn and Associates, Inc.

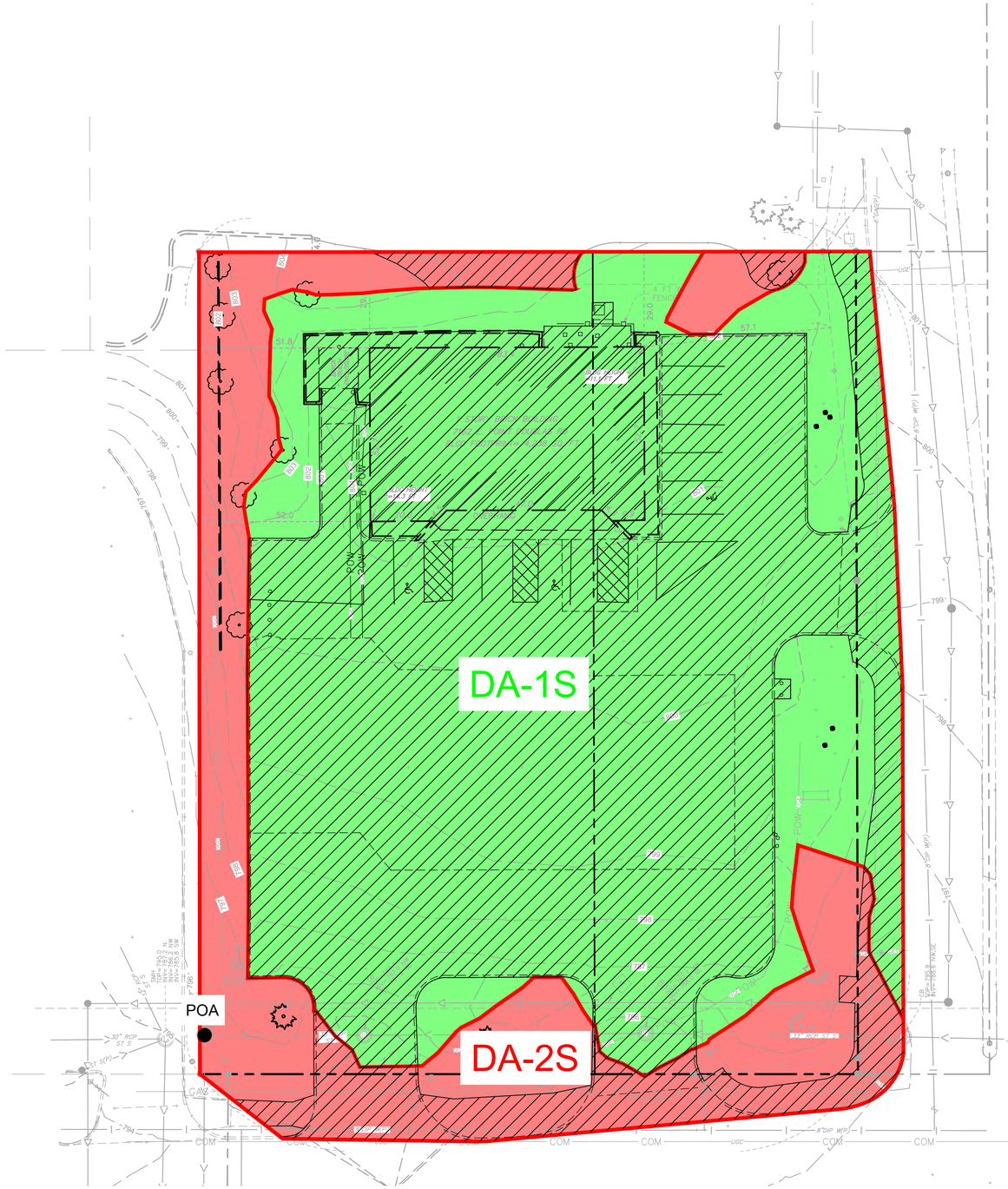


| DRAINAGE AREA SUMMARY | |
|---|---|
| 1S SUMMARY | |
| IMPERVIOUS AREA | 35,505 SF |
| PERVIOUS AREA | 7,288 SF |
| TOTAL AREA | 42,793 SF |
| 2S SUMMARY | |
| IMPERVIOUS AREA | 4,261 SF |
| PERVIOUS AREA | 9,123 SF |
| TOTAL AREA | 13,384 SF |
| TOTAL SUMMARY | |
| IMPERVIOUS AREA | 39,766 SF |
| PERVIOUS AREA | 16,411 SF |
| TOTAL AREA | 56,177 SF |

**LEGEND**

- ON-SITE DRAINAGE
- OFF-SITE DRAINAGE
- IMPERVIOUS AREA
- POINT OF ANALYSIS

NORTH

GRAPHIC SCALE IN FEET
0 10 20 40

Know what's **below.** **Call** before you dig.

PRELIMINARY - NOT FOR CONSTRUCTION

| No. | REVISIONS | DATE | BY |
|---|---|---|---|

Kimley»Horn
© 2024 KIMLEY-HORN AND ASSOCIATES, INC.
11995 SINGLETREE LN, SUITE 225, EDEN PRAIRIE, MN 55344
PHONE: 612-315-1272
WWW.KIMLEY-HORN.COM

| | |
|---|---|
| KHA PROJECT | 161369000 |
| DATE | 01/28/2026 |
| SCALE | AS SHOWN |
| DESIGNED BY | ARF |
| DRAWN BY | AKK |
| CHECKED BY | MTL |

# EXISTING DRAINAGE AREA

**PANERA - COTTAGE GROVE**
PREPARED FOR
**CA COMMERCIAL**
COTTAGE GROVE MN

SHEET NUMBER
**EX-1**

# Exhibit 2. Proposed Drainage Exhibit

K:\TCW_LDEV\ca commercial\cottage grove, mn\3 Design\CAD\Exhibits\2025-0127 - DA Exhibits\[EX-1 & EX-2 Drainage Areas.dwg January 27, 2026 - 9:36pm
This document, together with the concepts and designs presented herein, as an instrument of service, is intended only for the specific purpose and client for which it was prepared. Reuse of and improper reliance on this document without written authorization and adaptation by Kimley-Horn and Associates, Inc. shall be without liability to Kimley-Horn and Associates, Inc.

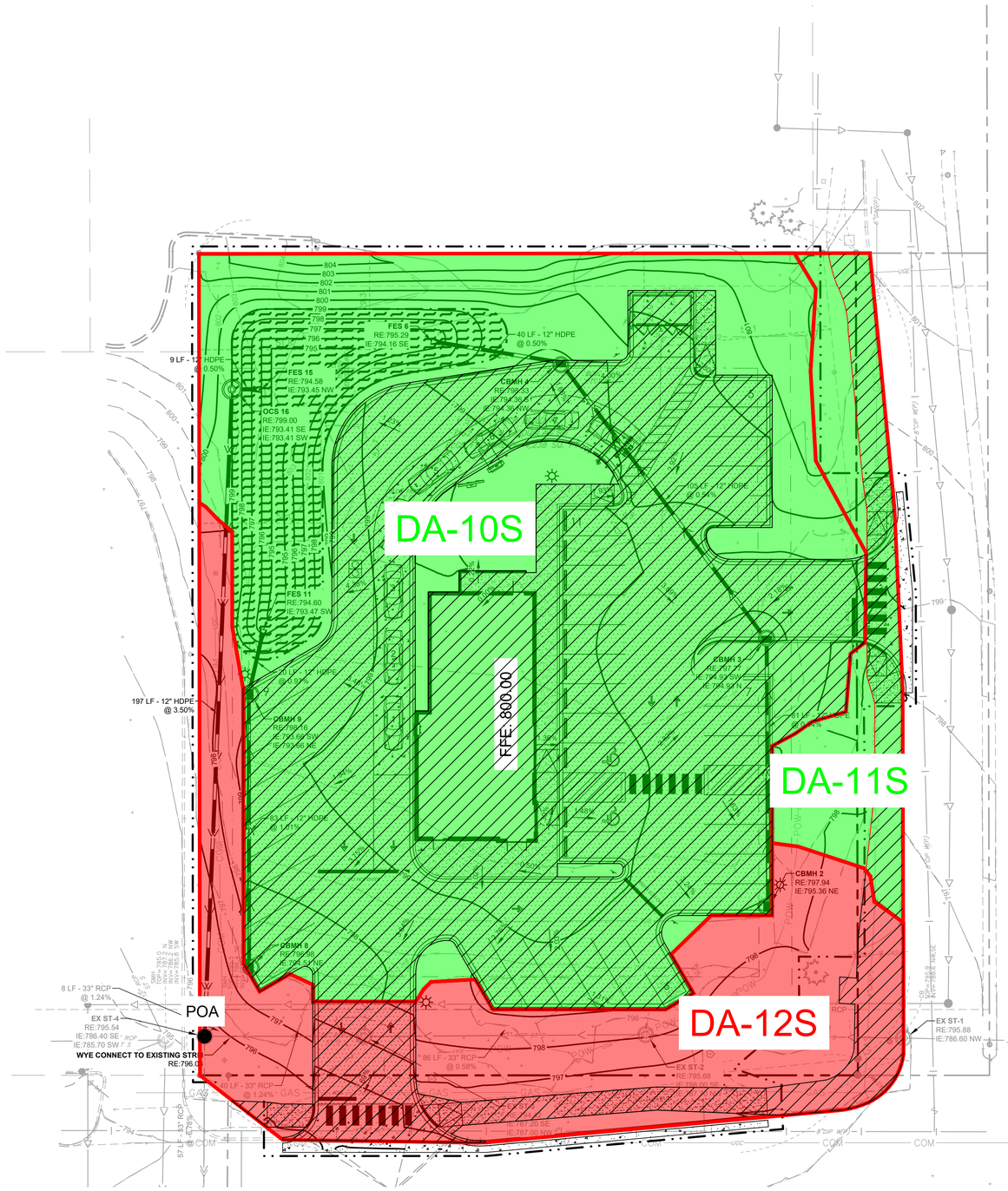


| DRAINAGE AREA SUMMARY | |
|---|---|
| 10S SUMMARY | |
| IMPERVIOUS AREA | 27,352 SF |
| PERVIOUS AREA | 12,365 SF |
| TOTAL AREA | 39,717 SF |
| 11S SUMMARY | |
| IMPERVIOUS AREA | 2,072 SF |
| PERVIOUS AREA | 2,088 SF |
| TOTAL AREA | 4,160 SF |
| 12S SUMMARY | |
| IMPERVIOUS AREA | 3,478 SF |
| PERVIOUS AREA | 8,827 SF |
| TOTAL AREA | 12,305 SF |
| TOTAL SUMMARY | |
| IMPERVIOUS AREA | 32,902 SF |
| PERVIOUS AREA | 23,280 SF |
| TOTAL AREA | 56,182 SF |

## LEGEND

- ON-SITE DRAINAGE
- OFF-SITE DRAINAGE
- IMPERVIOUS AREA
- POINT OF ANALYSIS

NORTH

GRAPHIC SCALE IN FEET
0 10 20 40

Know what's **below.**
**Call** before you dig.

PRELIMINARY - NOT FOR CONSTRUCTION

| No. | REVISIONS | DATE | BY |
|---|---|---|---|

Kimley»Horn

© 2024 KIMLEY-HORN AND ASSOCIATES, INC.
11995 SINGLETREE LN, SUITE 225, EDEN PRAIRIE, MN 55344
PHONE: 612-315-1272
WWW.KIMLEY-HORN.COM

KHA PROJECT
161369000
DATE
01/28/2026
SCALE AS SHOWN
DESIGNED BY ARF
DRAWN BY AKK
CHECKED BY MTL

# PROPOSED DRAINAGE AREAS

**PANERA - COTTAGE GROVE**
PREPARED FOR
**CA COMMERCIAL**
COTTAGE GROVE MN

SHEET NUMBER
**EX-2**

# Appendices

# Appendix 1. Bolton & Menk Stormwater Rules Summary

BOLTON & MENK
Real People. Real Solutions.

3507 High Point Drive North
Bldg. 1 Suite E130
Oakdale, MN 55128

Ph: (651) 704-9970
Bolton-Menk.com

**MEMORANDUM**

**Date**: January 22, 2026

**To**: Connor McCoy, Kimley-Horn connor.mccoy@kimley-horn.com 651-395-7985

**From**: Brent Johnson, PE

CC: Joe Fox, P.E,

**Subject**: Speedway Site Redevelopment, Stormwater Rules Summary,
City of Cottage Grove
Project No.: *N15.103963*

The former Speedway Gas Station site at 7162 East Point Douglas is being redeveloped (Parcel 163-1702721220018). The parcel area is 1.15 acres, and the proposed disturbed area will include the whole site. The impervious area will be decreased from 0.91 acres existing to 0.76 acres proposed, therefore the areas of new and fully reconstructed impervious surfaces are under 1 acre.

The following notes regarding the Cottage Grove stormwater rules and standards are excerpts from the City's Surface Water Plan and the South Washington Watershed District rules. The future land use map for this parcel indicates Mixed Use.

**MS4, NPDES Permit and Watershed District**: Since the disturbed area exceeds 1 acre the NPDES Construction Stormwater Permit and SWPPP are required. Since the net increase in impervious and the sum of new & fully reconstructed impervious surfaces does not exceed 1 acre, NPDES permanent stormwater treatment is not required. The South Washington Watershed District stormwater rules of total phosphorus load limits, do apply to this project. Since the project site drains to the Mississippi River, Watershed rules call for a TP loading rate of 0.22 lbs./acre/year or existing loading rates, whichever is less.

**Volume Control:** This project does not trigger volume control requirements of either the NPDES Construction Stormwater Permit nor South Washington Watershed District.

**Rate Control**: If the proposed impervious area of the site increases, please submit a rate control analysis. Peak flow rates after development shall not exceed pre-development peak flow rates for the critical 2-year, 10-year, and 100-year recurrence interval precipitation events. Use 24-hour NOAA Atlas 14 Precipitation events and MSE3 distribution for rate control analyses.

**Water Quality:** For redeveloped areas the City requires a net reduction from pre-project conditions. Therefore, on an annual average basis, reductions shall be obtained for the stormwater discharge volume and the stormwater discharges of total suspended solids (TSS) and total phosphorus (TP). The net reduction will apply to impervious areas that are redeveloped.


Bolton & Menk is an equal opportunity employer.

Submit a water quality analysis using a method such as the P8 or MIDS models to demonstrate compliance.

**Stormwater Infiltration**:
98% of the Speedway site lies outside of the wellhead protection 10-year Composite Groundwater Capture Zone of a wellhead protection area (**Figure 1**), so infiltration of stormwater is allowed by the city unless precluded by criteria of the MN Department of Health, or the MPCA Stormwater Manual (depth to bedrock, depth to groundwater, or other criteria). A small part of the parcel (935 square feet in the north end) lies within the 10-year Groundwater Capture Zone where infiltration practices are prohibited by the City.

Figure 1. Speedway Site and 10-Year Groundwater Capture Zone

**Control erosion at construction sites:**
Erosion and sediment control best management practices as outlined in the Minnesota Stormwater Manual will be required and must be shown on required submittals to the City for approval. Any street sweeping conducted by the City to remove erosional debris from streets will be charged to the owner of the property. Please note that the city requires silt fence or similar perimeter sediment controls at the back of curb and around lots during the building phase.

**Testing:** The City will require post-construction infiltration testing to verify the infiltration or filtration rate and drawdown period of any infiltration or filtration basins.

**Models:** Please note that digital copies of the final version stormwater models and shapefiles or CAD drawings of existing and proposed drainage areas are to be submitted to the city once the review and revision process is complete.

# Appendix 2. Pre-Development HydroCAD Model Analysis

***Pre-Development***

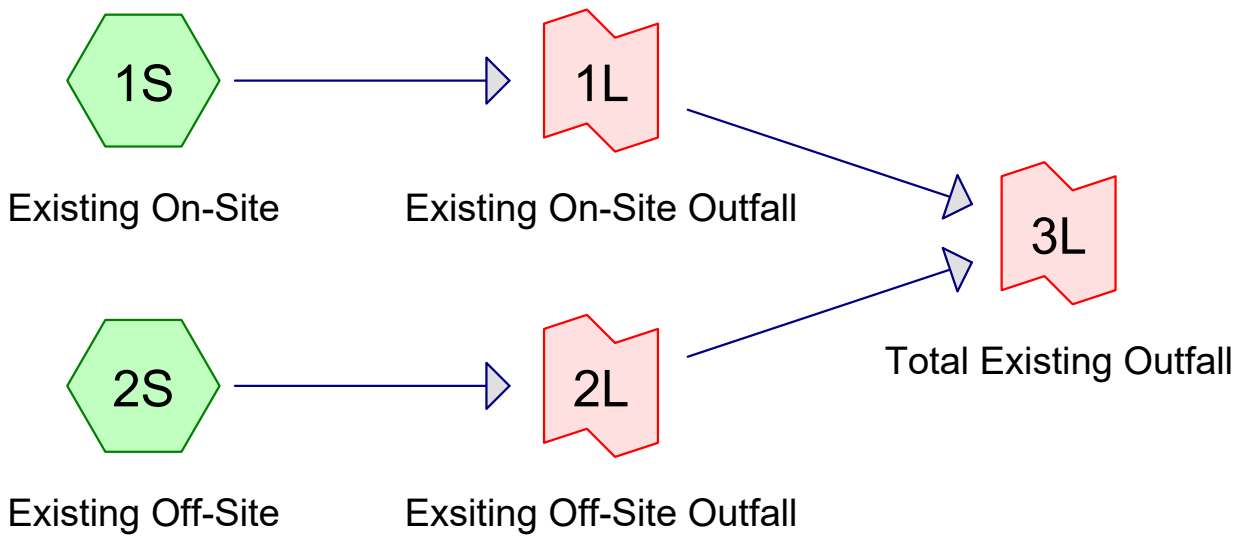


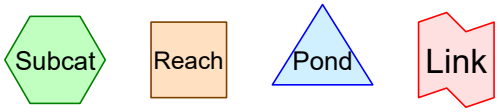


**Routing Diagram for 2026-0126 Pre & Post Development**
Prepared by Kimley-Horn & Associates, Printed 1/27/2026
HydroCAD® 10.20-5c s/n 02344 © 2023 HydroCAD Software Solutions LLC

## Rainfall Events Listing (selected events)

| Event# | Event Name | Storm Type | Curve | Mode | Duration (hours) | B/B | Depth (inches) | AMC |
|---|---|---|---|---|---|---|---|---|
| 1 | 2-Year | MSE 24-hr | 3 | Default | 24.00 | 1 | 2.79 | 2 |
| 2 | 10-Year | MSE 24-hr | 3 | Default | 24.00 | 1 | 4.15 | 2 |
| 3 | 100-Year | MSE 24-hr | 3 | Default | 24.00 | 1 | 7.40 | 2 |

## Area Listing (selected nodes)

| Area (acres) | CN | Description (subcatchment-numbers) |
|---|---|---|
| 0.377 | 74 | >75% Grass cover, Good, HSG C (1S, 2S) |
| 0.913 | 98 | Paved parking, HSG C (1S, 2S) |
| **1.290** | **91** | **TOTAL AREA** |

## Soil Listing (selected nodes)

| Area (acres) | Soil Group | Subcatchment Numbers |
|---|---|---|
| 0.000 | HSG A | |
| 0.000 | HSG B | |
| 1.290 | HSG C | 1S, 2S |
| 0.000 | HSG D | |
| 0.000 | Other | |
| **1.290** | | **TOTAL AREA** |

## Ground Covers (selected nodes)

| HSG-A (acres) | HSG-B (acres) | HSG-C (acres) | HSG-D (acres) | Other (acres) | Total (acres) | Ground Cover | Subcatchment Numbers |
|---|---|---|---|---|---|---|---|
| 0.000 | 0.000 | 0.377 | 0.000 | 0.000 | 0.377 | >75% Grass cover, Good | 1S, 2S |
| 0.000 | 0.000 | 0.913 | 0.000 | 0.000 | 0.913 | Paved parking | 1S, 2S |
| **0.000** | **0.000** | **1.290** | **0.000** | **0.000** | **1.290** | **TOTAL AREA** | |

Time span=0.01-150.00 hrs, dt=0.01 hrs, 15000 points
Runoff by SCS TR-20 method, UH=SCS, Weighted-CN
Reach routing by Dyn-Stor-Ind method - Pond routing by Dyn-Stor-Ind method

**Subcatchment1S: Existing On-Site** Runoff Area=42,793 sf 82.97% Impervious Runoff Depth=2.15"
Tc=7.0 min CN=94 Runoff=3.54 cfs 0.176 af

**Subcatchment2S: Existing Off-Site** Runoff Area=13,384 sf 31.84% Impervious Runoff Depth=1.22"
Tc=7.0 min CN=82 Runoff=0.67 cfs 0.031 af

**Link 1L: Existing On-Site Outfall** Inflow=3.54 cfs 0.176 af
Primary=3.54 cfs 0.176 af

**Link 2L: Exsiting Off-Site Outfall** Inflow=0.67 cfs 0.031 af
Primary=0.67 cfs 0.031 af

**Link 3L: Total Existing Outfall** Inflow=4.20 cfs 0.207 af
Primary=4.20 cfs 0.207 af

**Total Runoff Area = 1.290 ac Runoff Volume = 0.207 af Average Runoff Depth = 1.93"**
**29.21% Pervious = 0.377 ac 70.79% Impervious = 0.913 ac**

## Summary for Subcatchment 1S: Existing On-Site

Runoff = 3.54 cfs @ 12.14 hrs, Volume= 0.176 af, Depth= 2.15"
Routed to Link 1L : Existing On-Site Outfall

Runoff by SCS TR-20 method, UH=SCS, Weighted-CN, Time Span= 0.01-150.00 hrs, dt= 0.01 hrs
MSE 24-hr 3 2-Year Rainfall=2.79"

| Area (sf) | CN | Description |
|---|---|---|
| 7,288 | 74 | >75% Grass cover, Good, HSG C |
| 35,505 | 98 | Paved parking, HSG C |
| 42,793 | 94 | Weighted Average |
| 7,288 | 74 | 17.03% Pervious Area |
| 35,505 | 98 | 82.97% Impervious Area |

| Tc (min) | Length (feet) | Slope (ft/ft) | Velocity (ft/sec) | Capacity (cfs) | Description |
|---|---|---|---|---|---|
| 7.0 | | | | | **Direct Entry,** |

## Subcatchment 1S: Existing On-Site

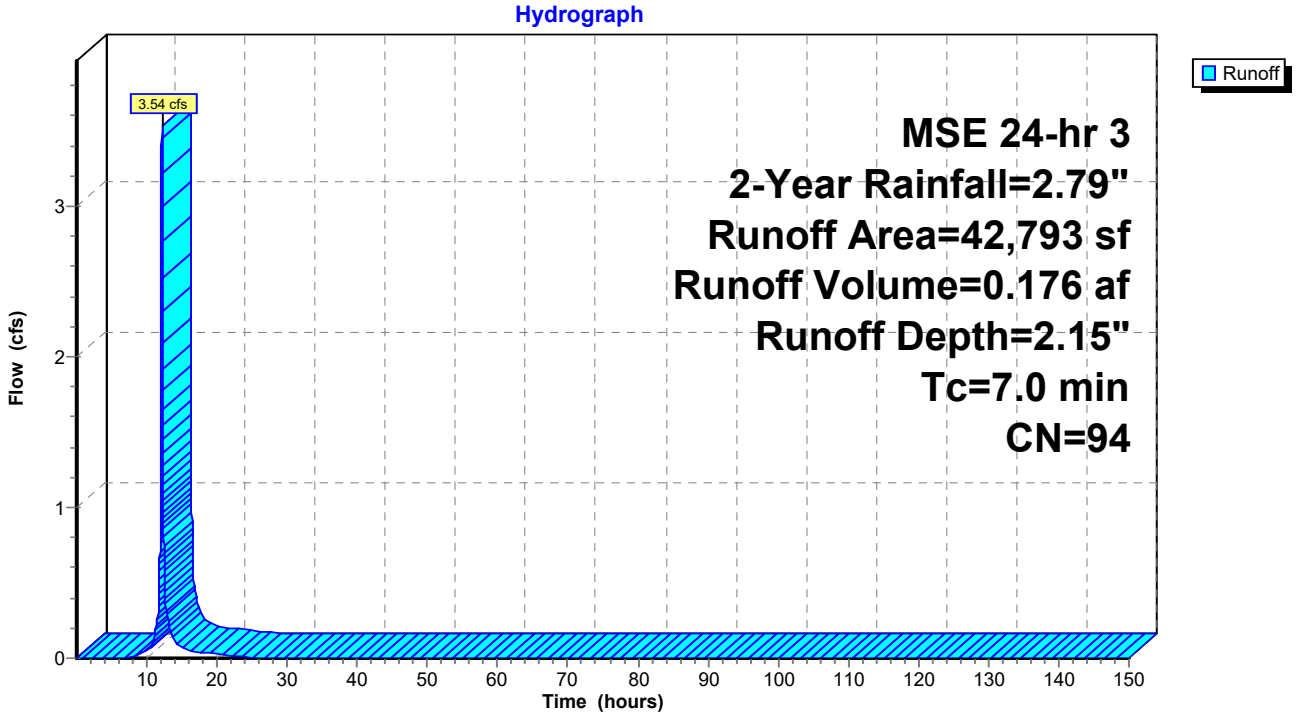

## Summary for Subcatchment 2S: Existing Off-Site

Runoff = 0.67 cfs @ 12.15 hrs, Volume= 0.031 af, Depth= 1.22"
Routed to Link 2L : Exsiting Off-Site Outfall

Runoff by SCS TR-20 method, UH=SCS, Weighted-CN, Time Span= 0.01-150.00 hrs, dt= 0.01 hrs
MSE 24-hr 3 2-Year Rainfall=2.79"

| Area (sf) | CN | Description |
|---|---|---|
| 9,123 | 74 | >75% Grass cover, Good, HSG C |
| 4,261 | 98 | Paved parking, HSG C |
| 13,384 | 82 | Weighted Average |
| 9,123 | 74 | 68.16% Pervious Area |
| 4,261 | 98 | 31.84% Impervious Area |

| Tc (min) | Length (feet) | Slope (ft/ft) | Velocity (ft/sec) | Capacity (cfs) | Description |
|---|---|---|---|---|---|
| 7.0 | | | | | **Direct Entry,** |

## Subcatchment 2S: Existing Off-Site

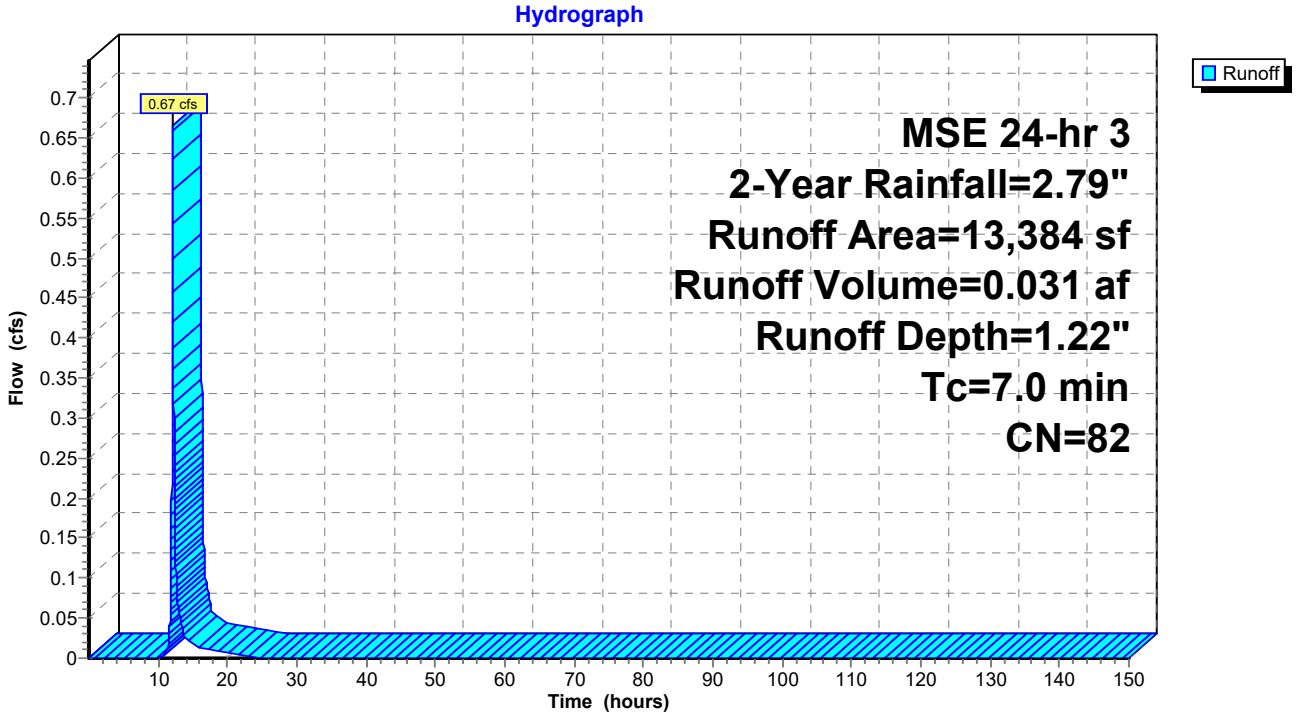

## Summary for Link 1L: Existing On-Site Outfall

Inflow Area = 0.982 ac, 82.97% Impervious, Inflow Depth = 2.15" for 2-Year event
Inflow = 3.54 cfs @ 12.14 hrs, Volume= 0.176 af
Primary = 3.54 cfs @ 12.14 hrs, Volume= 0.176 af, Atten= 0%, Lag= 0.0 min
Routed to Link 3L : Total Existing Outfall

Primary outflow = Inflow, Time Span= 0.01-150.00 hrs, dt= 0.01 hrs

## Link 1L: Existing On-Site Outfall

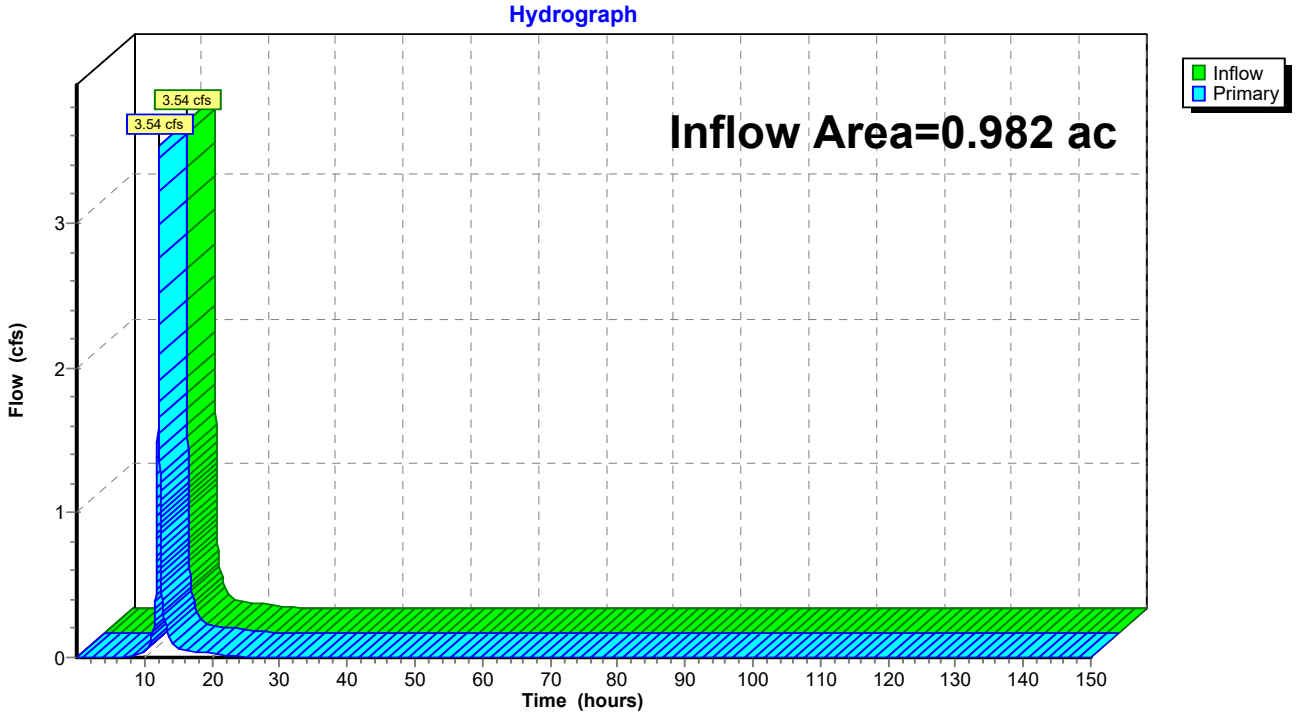

## Summary for Link 2L: Exsiting Off-Site Outfall

Inflow Area = 0.307 ac, 31.84% Impervious, Inflow Depth = 1.22" for 2-Year event
Inflow = 0.67 cfs @ 12.15 hrs, Volume= 0.031 af
Primary = 0.67 cfs @ 12.15 hrs, Volume= 0.031 af, Atten= 0%, Lag= 0.0 min
Routed to Link 3L : Total Existing Outfall

Primary outflow = Inflow, Time Span= 0.01-150.00 hrs, dt= 0.01 hrs

## Link 2L: Exsiting Off-Site Outfall

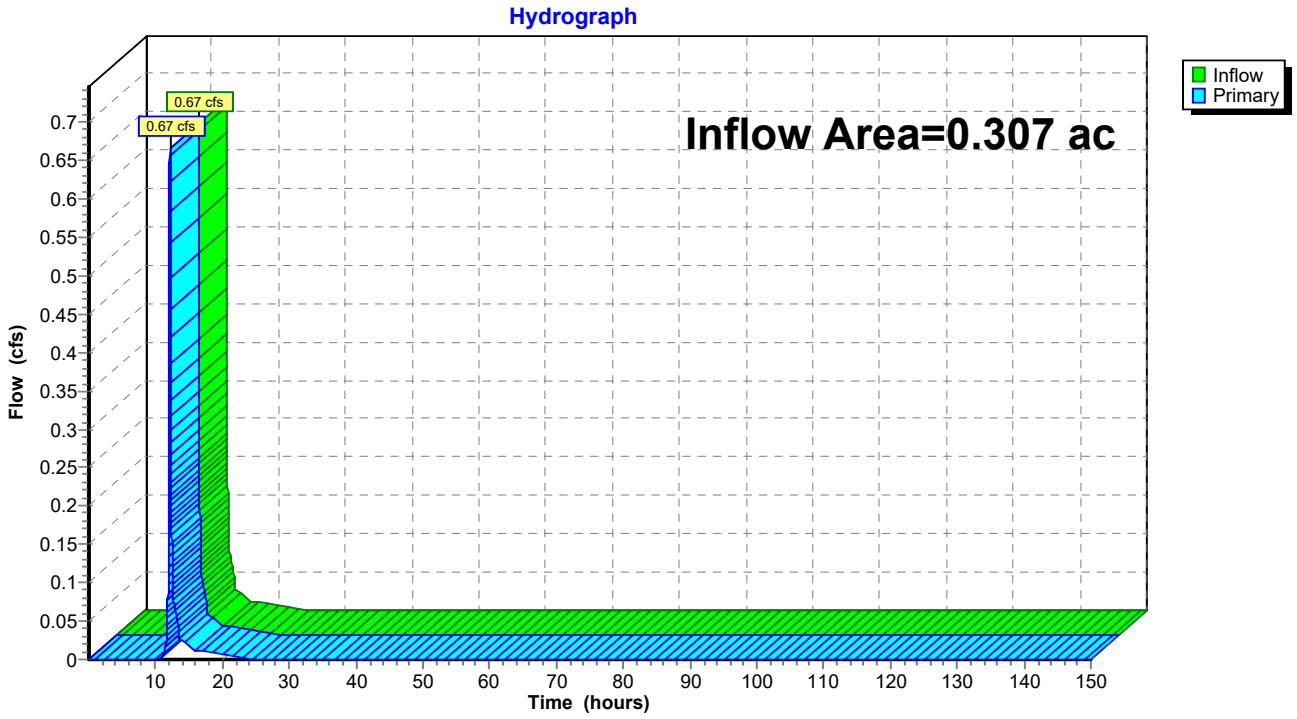

## Summary for Link 3L: Total Existing Outfall

Inflow Area = 1.290 ac, 70.79% Impervious, Inflow Depth = 1.93" for 2-Year event
Inflow = 4.20 cfs @ 12.14 hrs, Volume= 0.207 af
Primary = 4.20 cfs @ 12.14 hrs, Volume= 0.207 af, Atten= 0%, Lag= 0.0 min

Primary outflow = Inflow, Time Span= 0.01-150.00 hrs, dt= 0.01 hrs

## Link 3L: Total Existing Outfall

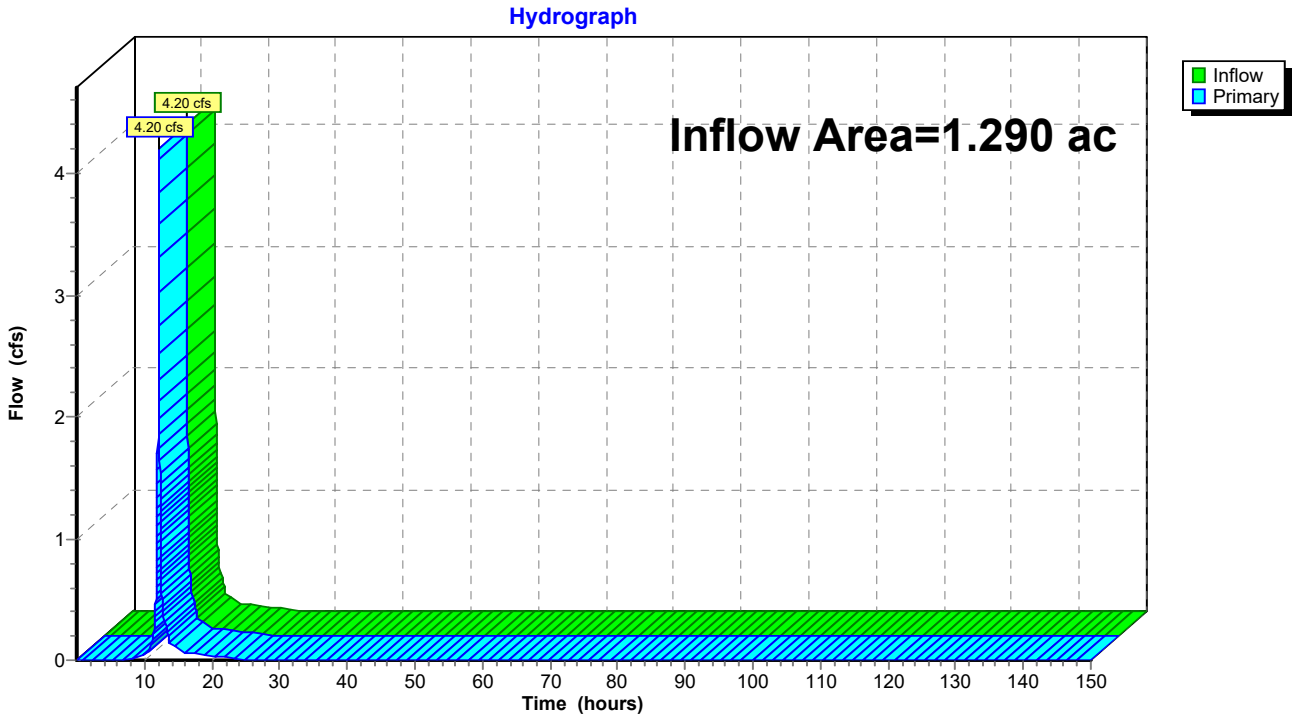

Time span=0.01-150.00 hrs, dt=0.01 hrs, 15000 points
Runoff by SCS TR-20 method, UH=SCS, Weighted-CN
Reach routing by Dyn-Stor-Ind method - Pond routing by Dyn-Stor-Ind method

**Subcatchment1S: Existing On-Site** Runoff Area=42,793 sf 82.97% Impervious Runoff Depth=3.47"
Tc=7.0 min CN=94 Runoff=5.54 cfs 0.284 af

**Subcatchment2S: Existing Off-Site** Runoff Area=13,384 sf 31.84% Impervious Runoff Depth=2.33"
Tc=7.0 min CN=82 Runoff=1.27 cfs 0.060 af

**Link 1L: Existing On-Site Outfall** Inflow=5.54 cfs 0.284 af
Primary=5.54 cfs 0.284 af

**Link 2L: Exsiting Off-Site Outfall** Inflow=1.27 cfs 0.060 af
Primary=1.27 cfs 0.060 af

**Link 3L: Total Existing Outfall** Inflow=6.81 cfs 0.344 af
Primary=6.81 cfs 0.344 af

**Total Runoff Area = 1.290 ac Runoff Volume = 0.344 af Average Runoff Depth = 3.20"**
**29.21% Pervious = 0.377 ac 70.79% Impervious = 0.913 ac**

## Summary for Subcatchment 1S: Existing On-Site

Runoff = 5.54 cfs @ 12.14 hrs, Volume= 0.284 af, Depth= 3.47"
Routed to Link 1L : Existing On-Site Outfall

Runoff by SCS TR-20 method, UH=SCS, Weighted-CN, Time Span= 0.01-150.00 hrs, dt= 0.01 hrs
MSE 24-hr 3 10-Year Rainfall=4.15"

| Area (sf) | CN | Description |
|---|---|---|
| 7,288 | 74 | >75% Grass cover, Good, HSG C |
| 35,505 | 98 | Paved parking, HSG C |
| 42,793 | 94 | Weighted Average |
| 7,288 | 74 | 17.03% Pervious Area |
| 35,505 | 98 | 82.97% Impervious Area |

| Tc (min) | Length (feet) | Slope (ft/ft) | Velocity (ft/sec) | Capacity (cfs) | Description |
|---|---|---|---|---|---|
| 7.0 | | | | | **Direct Entry,** |

## Subcatchment 1S: Existing On-Site

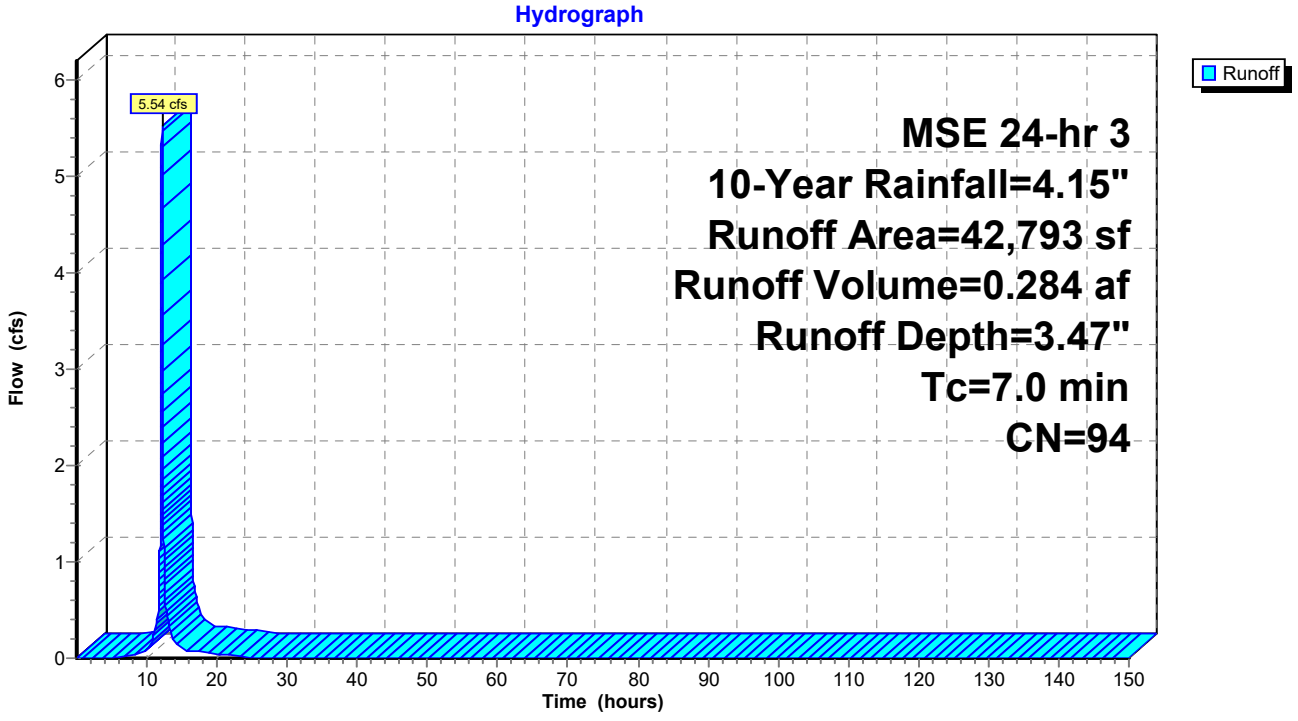

## Summary for Subcatchment 2S: Existing Off-Site

Runoff = 1.27 cfs @ 12.14 hrs, Volume= 0.060 af, Depth= 2.33"
Routed to Link 2L : Exsiting Off-Site Outfall

Runoff by SCS TR-20 method, UH=SCS, Weighted-CN, Time Span= 0.01-150.00 hrs, dt= 0.01 hrs
MSE 24-hr 3 10-Year Rainfall=4.15"

| Area (sf) | CN | Description |
|---|---|---|
| 9,123 | 74 | >75% Grass cover, Good, HSG C |
| 4,261 | 98 | Paved parking, HSG C |
| 13,384 | 82 | Weighted Average |
| 9,123 | 74 | 68.16% Pervious Area |
| 4,261 | 98 | 31.84% Impervious Area |

| Tc (min) | Length (feet) | Slope (ft/ft) | Velocity (ft/sec) | Capacity (cfs) | Description |
|---|---|---|---|---|---|
| 7.0 | | | | | **Direct Entry,** |

## Subcatchment 2S: Existing Off-Site

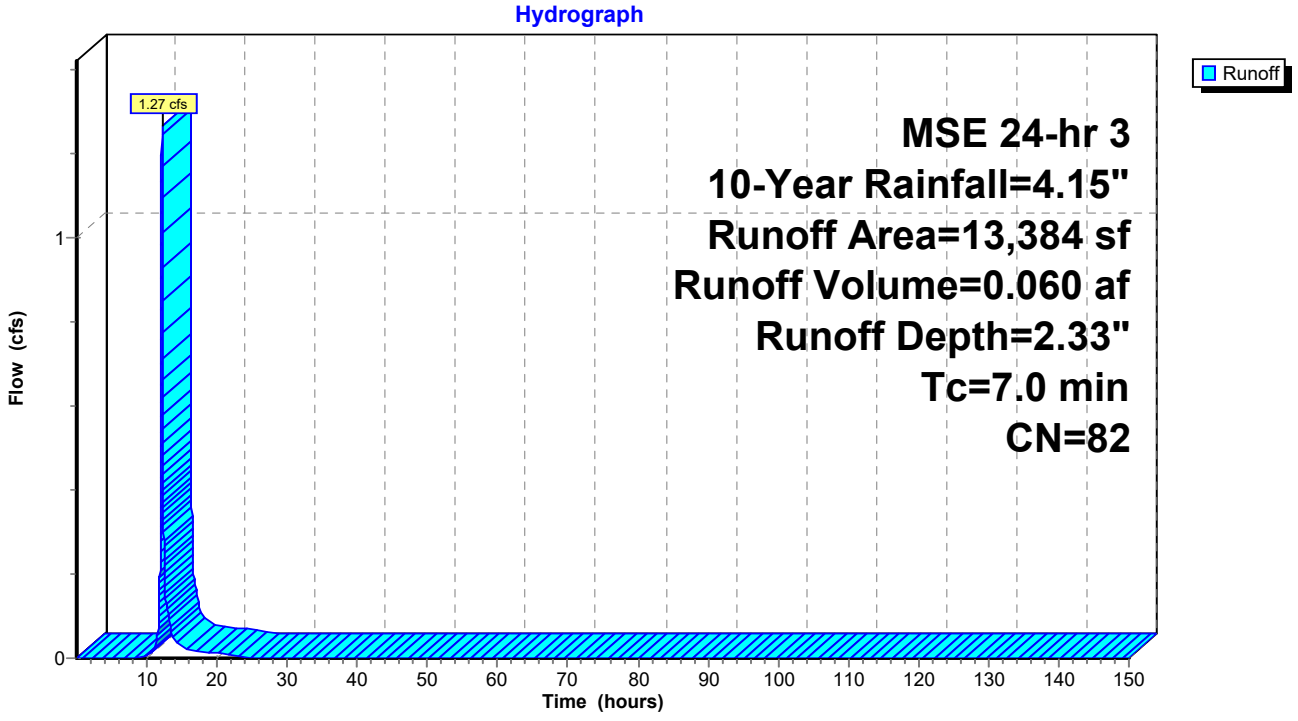

## Summary for Link 1L: Existing On-Site Outfall

Inflow Area = 0.982 ac, 82.97% Impervious, Inflow Depth = 3.47" for 10-Year event
Inflow = 5.54 cfs @ 12.14 hrs, Volume= 0.284 af
Primary = 5.54 cfs @ 12.14 hrs, Volume= 0.284 af, Atten= 0%, Lag= 0.0 min
Routed to Link 3L : Total Existing Outfall

Primary outflow = Inflow, Time Span= 0.01-150.00 hrs, dt= 0.01 hrs

## Link 1L: Existing On-Site Outfall

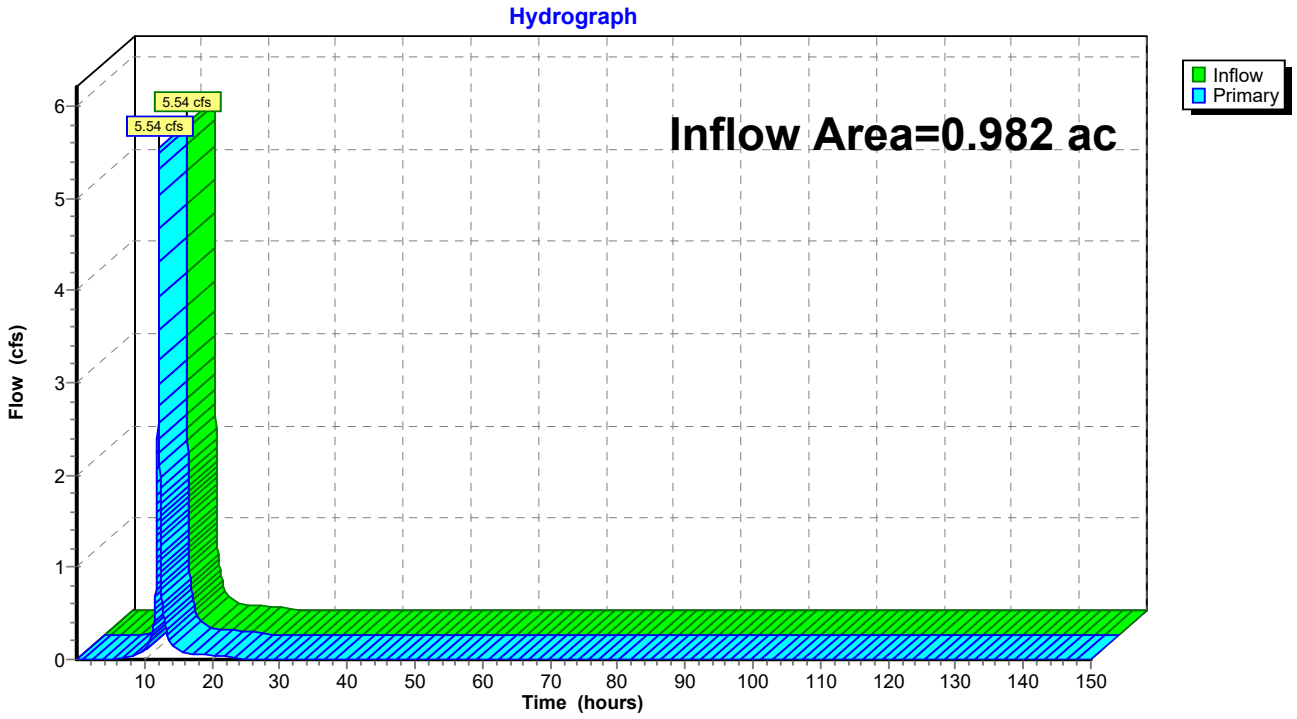

## Summary for Link 2L: Exsiting Off-Site Outfall

Inflow Area = 0.307 ac, 31.84% Impervious, Inflow Depth = 2.33" for 10-Year event
Inflow = 1.27 cfs @ 12.14 hrs, Volume= 0.060 af
Primary = 1.27 cfs @ 12.14 hrs, Volume= 0.060 af, Atten= 0%, Lag= 0.0 min
Routed to Link 3L : Total Existing Outfall

Primary outflow = Inflow, Time Span= 0.01-150.00 hrs, dt= 0.01 hrs

## Link 2L: Exsiting Off-Site Outfall

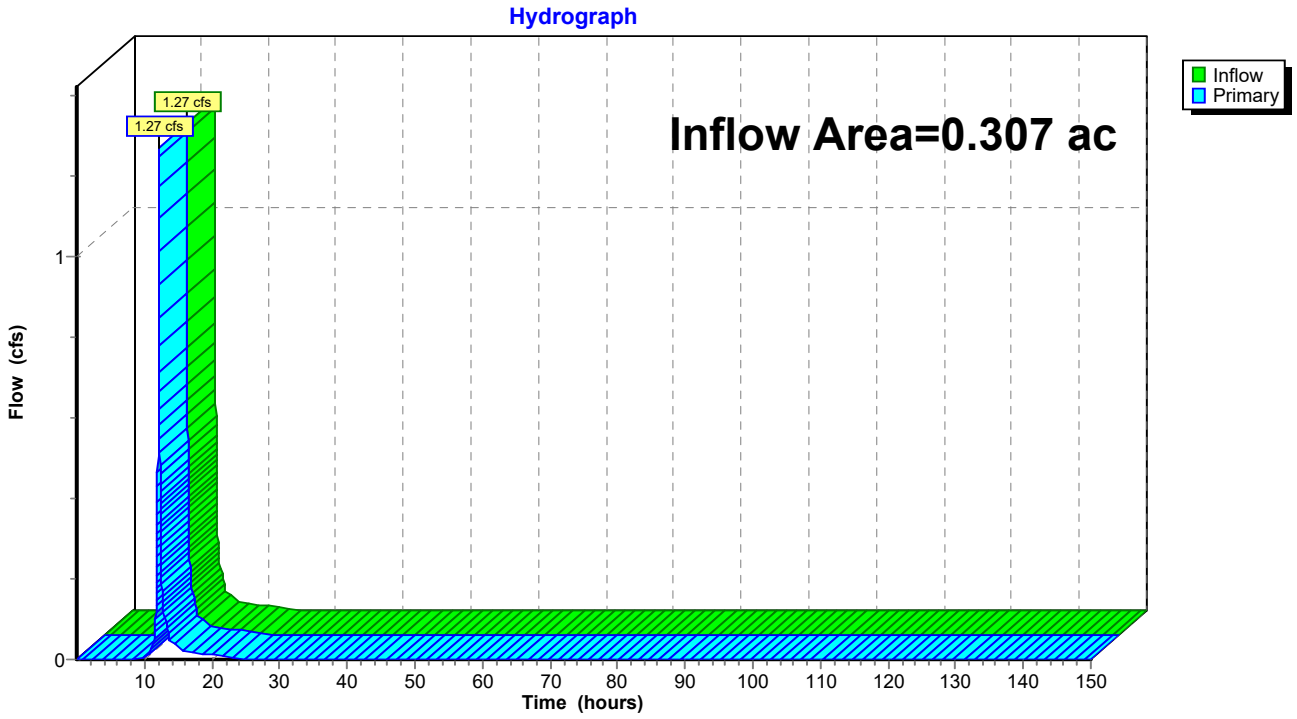

## Summary for Link 3L: Total Existing Outfall

Inflow Area = 1.290 ac, 70.79% Impervious, Inflow Depth = 3.20" for 10-Year event
Inflow = 6.81 cfs @ 12.14 hrs, Volume= 0.344 af
Primary = 6.81 cfs @ 12.14 hrs, Volume= 0.344 af, Atten= 0%, Lag= 0.0 min

Primary outflow = Inflow, Time Span= 0.01-150.00 hrs, dt= 0.01 hrs

## Link 3L: Total Existing Outfall

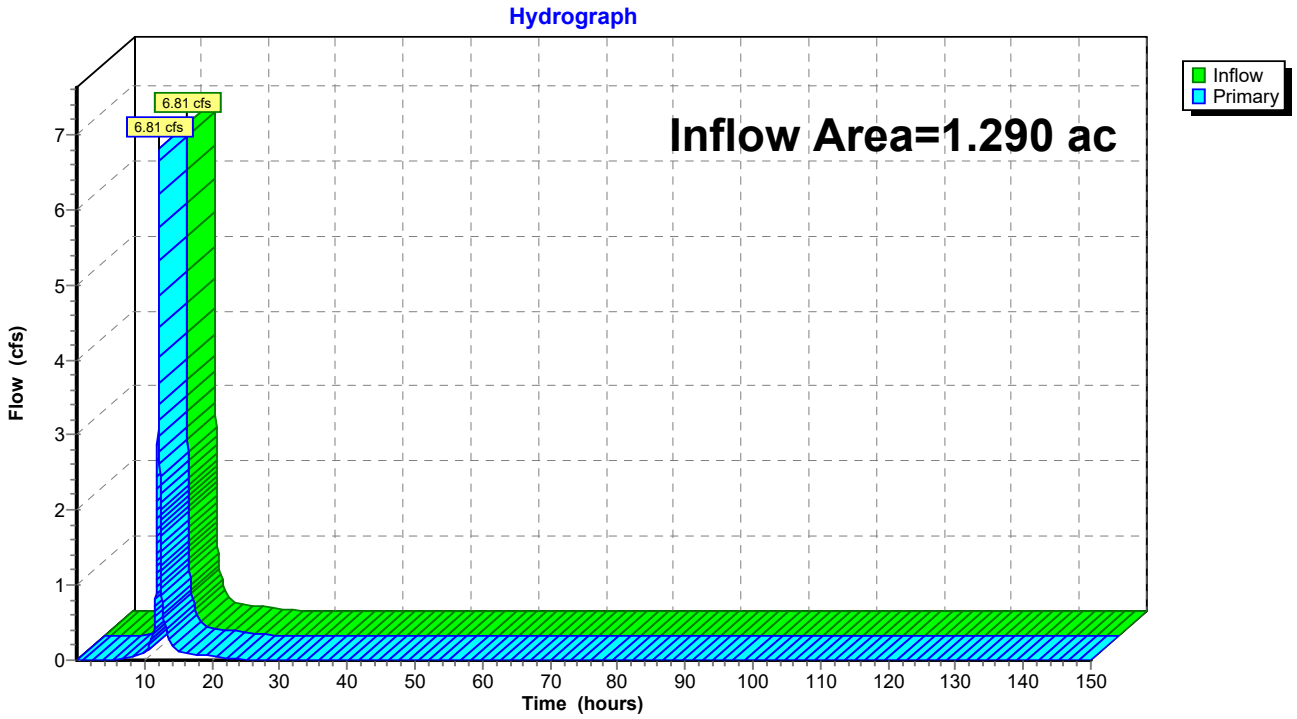

Time span=0.01-150.00 hrs, dt=0.01 hrs, 15000 points
Runoff by SCS TR-20 method, UH=SCS, Weighted-CN
Reach routing by Dyn-Stor-Ind method - Pond routing by Dyn-Stor-Ind method

**Subcatchment1S: Existing On-Site** Runoff Area=42,793 sf 82.97% Impervious Runoff Depth=6.69"
Tc=7.0 min CN=94 Runoff=10.26 cfs 0.547 af

**Subcatchment2S: Existing Off-Site** Runoff Area=13,384 sf 31.84% Impervious Runoff Depth=5.29"
Tc=7.0 min CN=82 Runoff=2.78 cfs 0.136 af

**Link 1L: Existing On-Site Outfall** Inflow=10.26 cfs 0.547 af
Primary=10.26 cfs 0.547 af

**Link 2L: Exsiting Off-Site Outfall** Inflow=2.78 cfs 0.136 af
Primary=2.78 cfs 0.136 af

**Link 3L: Total Existing Outfall** Inflow=13.04 cfs 0.683 af
Primary=13.04 cfs 0.683 af

**Total Runoff Area = 1.290 ac Runoff Volume = 0.683 af Average Runoff Depth = 6.35"**
**29.21% Pervious = 0.377 ac 70.79% Impervious = 0.913 ac**

## Summary for Subcatchment 1S: Existing On-Site

Runoff = 10.26 cfs @ 12.14 hrs, Volume= 0.547 af, Depth= 6.69"
Routed to Link 1L : Existing On-Site Outfall

Runoff by SCS TR-20 method, UH=SCS, Weighted-CN, Time Span= 0.01-150.00 hrs, dt= 0.01 hrs
MSE 24-hr 3 100-Year Rainfall=7.40"

| Area (sf) | CN | Description |
|---|---|---|
| 7,288 | 74 | >75% Grass cover, Good, HSG C |
| 35,505 | 98 | Paved parking, HSG C |
| 42,793 | 94 | Weighted Average |
| 7,288 | 74 | 17.03% Pervious Area |
| 35,505 | 98 | 82.97% Impervious Area |

| Tc (min) | Length (feet) | Slope (ft/ft) | Velocity (ft/sec) | Capacity (cfs) | Description |
|---|---|---|---|---|---|
| 7.0 | | | | | **Direct Entry,** |

## Subcatchment 1S: Existing On-Site

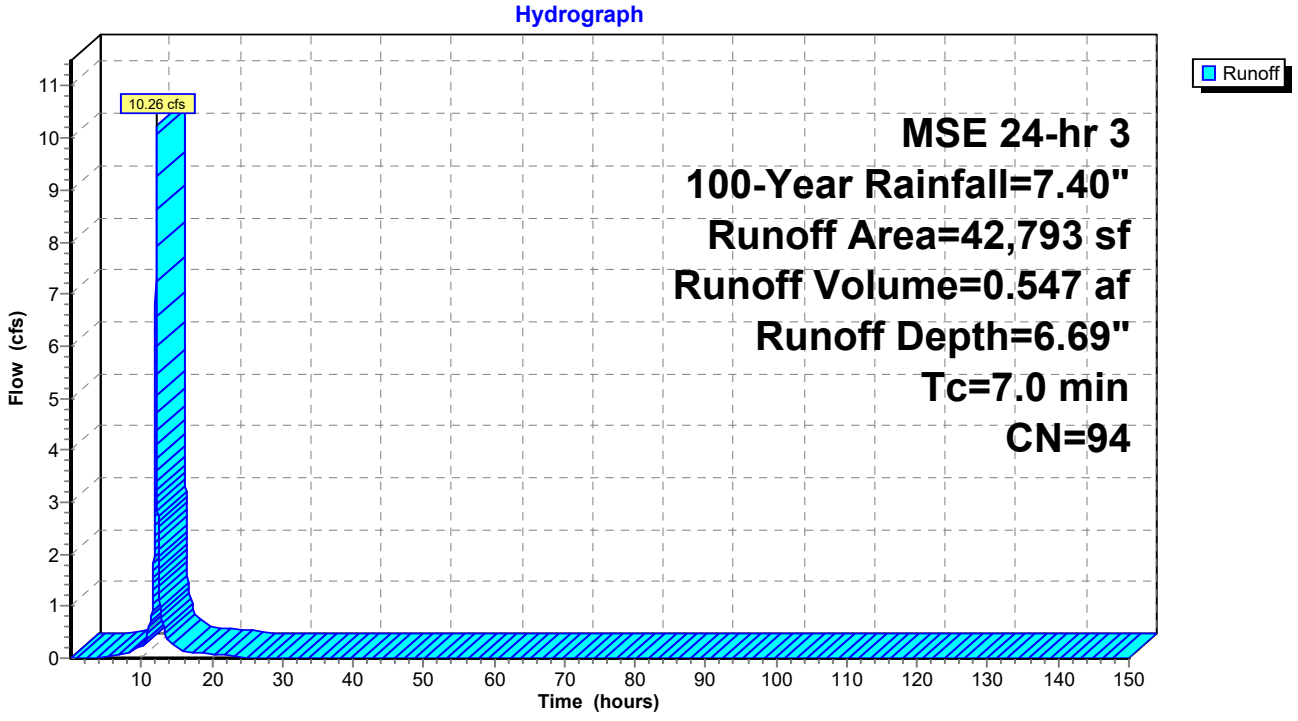

## Summary for Subcatchment 2S: Existing Off-Site

Runoff = 2.78 cfs @ 12.14 hrs, Volume= 0.136 af, Depth= 5.29"
Routed to Link 2L : Exsiting Off-Site Outfall

Runoff by SCS TR-20 method, UH=SCS, Weighted-CN, Time Span= 0.01-150.00 hrs, dt= 0.01 hrs
MSE 24-hr 3 100-Year Rainfall=7.40"

| Area (sf) | CN | Description |
|---|---|---|
| 9,123 | 74 | >75% Grass cover, Good, HSG C |
| 4,261 | 98 | Paved parking, HSG C |
| 13,384 | 82 | Weighted Average |
| 9,123 | 74 | 68.16% Pervious Area |
| 4,261 | 98 | 31.84% Impervious Area |

| Tc (min) | Length (feet) | Slope (ft/ft) | Velocity (ft/sec) | Capacity (cfs) | Description |
|---|---|---|---|---|---|
| 7.0 | | | | | **Direct Entry,** |

## Subcatchment 2S: Existing Off-Site

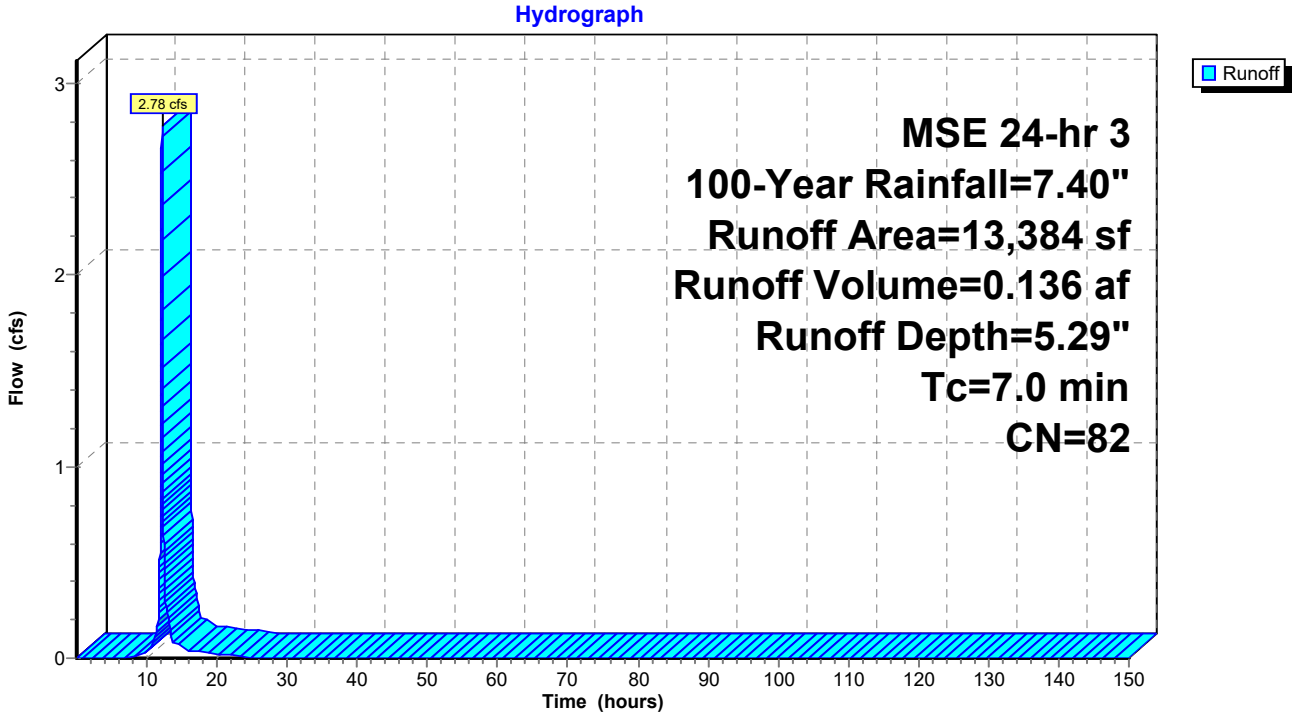

## Summary for Link 1L: Existing On-Site Outfall

Inflow Area = 0.982 ac, 82.97% Impervious, Inflow Depth = 6.69" for 100-Year event
Inflow = 10.26 cfs @ 12.14 hrs, Volume= 0.547 af
Primary = 10.26 cfs @ 12.14 hrs, Volume= 0.547 af, Atten= 0%, Lag= 0.0 min
Routed to Link 3L : Total Existing Outfall

Primary outflow = Inflow, Time Span= 0.01-150.00 hrs, dt= 0.01 hrs

## Link 1L: Existing On-Site Outfall

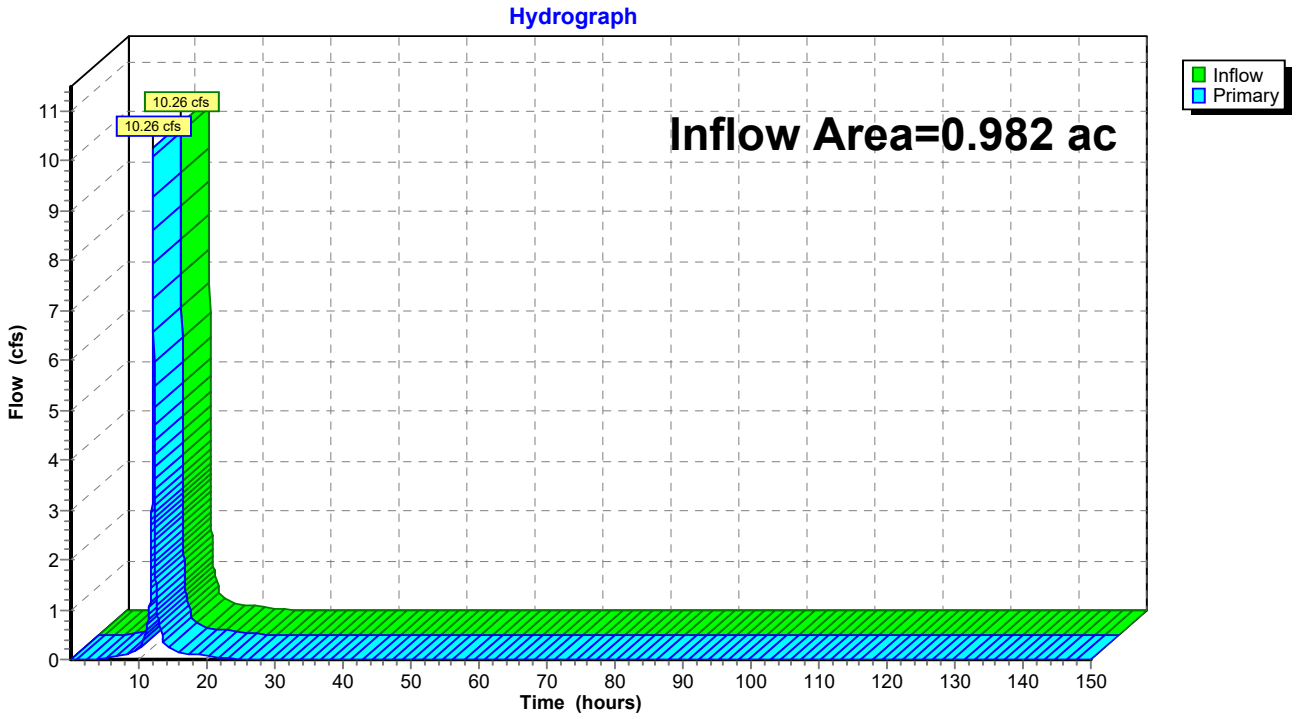

## Summary for Link 2L: Exsiting Off-Site Outfall

Inflow Area = 0.307 ac, 31.84% Impervious, Inflow Depth = 5.29" for 100-Year event
Inflow = 2.78 cfs @ 12.14 hrs, Volume= 0.136 af
Primary = 2.78 cfs @ 12.14 hrs, Volume= 0.136 af, Atten= 0%, Lag= 0.0 min
Routed to Link 3L : Total Existing Outfall

Primary outflow = Inflow, Time Span= 0.01-150.00 hrs, dt= 0.01 hrs

## Link 2L: Exsiting Off-Site Outfall

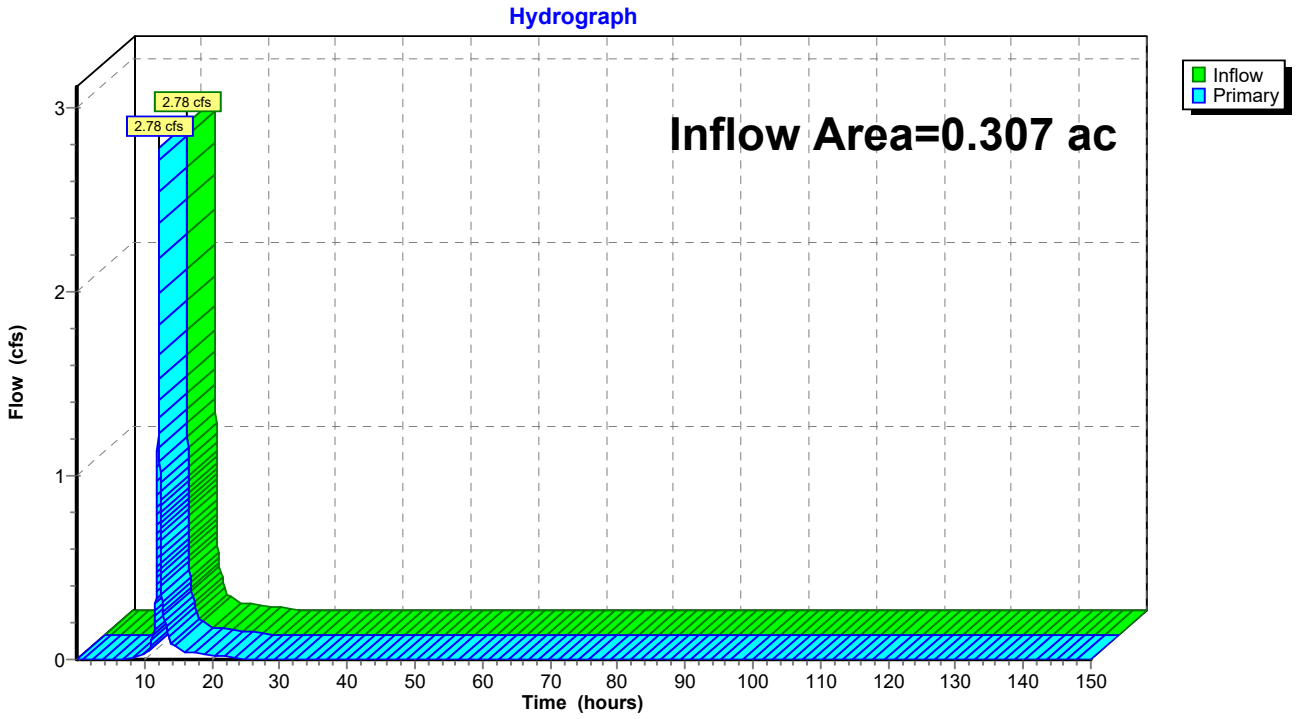

## Summary for Link 3L: Total Existing Outfall

Inflow Area = 1.290 ac, 70.79% Impervious, Inflow Depth = 6.35" for 100-Year event
Inflow = 13.04 cfs @ 12.14 hrs, Volume= 0.683 af
Primary = 13.04 cfs @ 12.14 hrs, Volume= 0.683 af, Atten= 0%, Lag= 0.0 min

Primary outflow = Inflow, Time Span= 0.01-150.00 hrs, dt= 0.01 hrs

## Link 3L: Total Existing Outfall

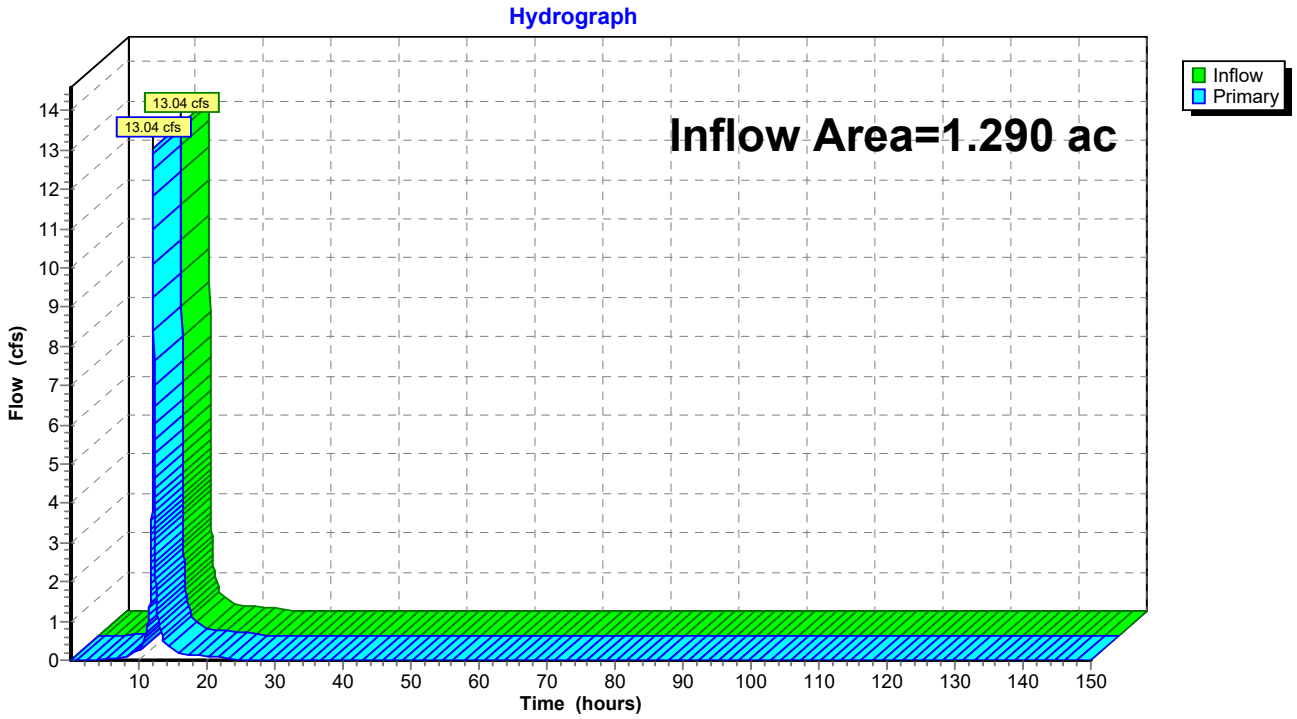

# Appendix 3. Post-Development HydroCAD Model Analysis

***Post-Development***

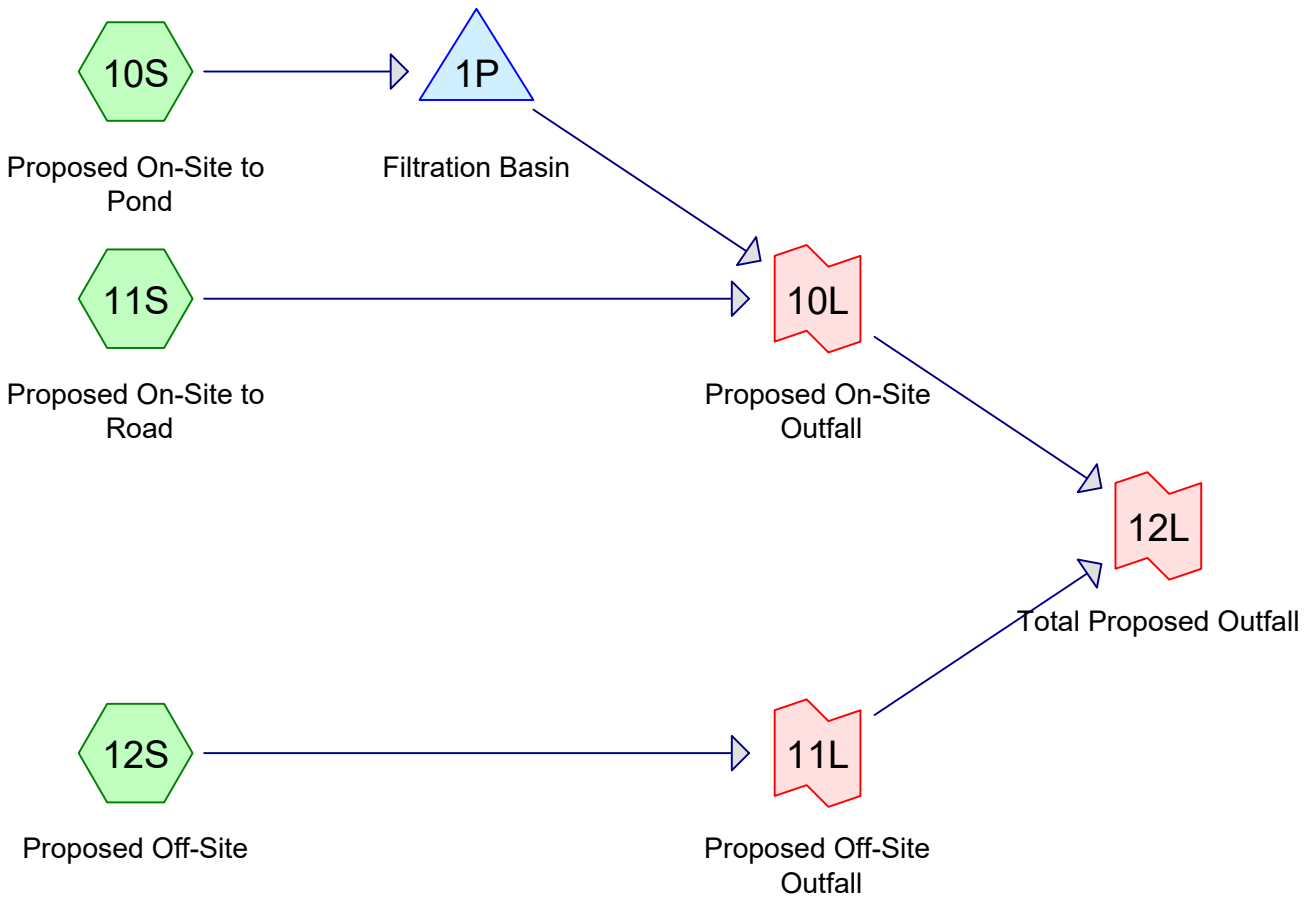


Subcat Reach Pond Link

**Routing Diagram for 2026-0126 Pre & Post Development**
Prepared by Kimley-Horn & Associates, Printed 1/27/2026
HydroCAD® 10.20-5c s/n 02344 © 2023 HydroCAD Software Solutions LLC

## Rainfall Events Listing (selected events)

| Event# | Event Name | Storm Type | Curve | Mode | Duration (hours) | B/B | Depth (inches) | AMC |
|---|---|---|---|---|---|---|---|---|
| 1 | 2-Year | MSE 24-hr | 3 | Default | 24.00 | 1 | 2.79 | 2 |
| 2 | 10-Year | MSE 24-hr | 3 | Default | 24.00 | 1 | 4.15 | 2 |
| 3 | 100-Year | MSE 24-hr | 3 | Default | 24.00 | 1 | 7.40 | 2 |

## Area Listing (selected nodes)

| Area (acres) | CN | Description (subcatchment-numbers) |
|---|---|---|
| 0.534 | 74 | >75% Grass cover, Good, HSG C (10S, 11S, 12S) |
| 0.755 | 98 | Paved parking, HSG C (10S, 11S, 12S) |
| **1.290** | **88** | **TOTAL AREA** |

## Soil Listing (selected nodes)

| Area (acres) | Soil Group | Subcatchment Numbers |
|---|---|---|
| 0.000 | HSG A | |
| 0.000 | HSG B | |
| 1.290 | HSG C | 10S, 11S, 12S |
| 0.000 | HSG D | |
| 0.000 | Other | |
| **1.290** | | **TOTAL AREA** |

## Ground Covers (selected nodes)

| HSG-A (acres) | HSG-B (acres) | HSG-C (acres) | HSG-D (acres) | Other (acres) | Total (acres) | Ground Cover | Subcatchment Numbers |
|---|---|---|---|---|---|---|---|
| 0.000 | 0.000 | 0.534 | 0.000 | 0.000 | 0.534 | >75% Grass cover, Good | 10S, 11S, 12S |
| 0.000 | 0.000 | 0.755 | 0.000 | 0.000 | 0.755 | Paved parking | 10S, 11S, 12S |
| **0.000** | **0.000** | **1.290** | **0.000** | **0.000** | **1.290** | **TOTAL AREA** | |

## Pipe Listing (selected nodes)

| Line# | Node Number | In-Invert (feet) | Out-Invert (feet) | Length (feet) | Slope (ft/ft) | n | Width (inches) | Diam/Height (inches) | Inside-Fill (inches) | Node Name |
|---|---|---|---|---|---|---|---|---|---|---|
| 1 | 1P | 793.00 | 790.05 | 196.6 | 0.0150 | 0.012 | 0.0 | 18.0 | 0.0 | |
| 2 | 1P | 793.00 | 793.00 | 100.0 | 0.0000 | 0.010 | 0.0 | 6.0 | 0.0 | |

Time span=0.01-150.00 hrs, dt=0.01 hrs, 15000 points
Runoff by SCS TR-20 method, UH=SCS, Weighted-CN
Reach routing by Dyn-Stor-Ind method - Pond routing by Dyn-Stor-Ind method

**Subcatchment10S: Proposed On-Site to** Runoff Area=39,717 sf 68.87% Impervious Runoff Depth=1.88"
Tc=7.0 min CN=91 Runoff=2.96 cfs 0.143 af

**Subcatchment11S: Proposed On-Site to** Runoff Area=4,160 sf 49.81% Impervious Runoff Depth=1.48"
Tc=7.0 min CN=86 Runoff=0.25 cfs 0.012 af

**Subcatchment12S: Proposed Off-Site** Runoff Area=12,305 sf 28.26% Impervious Runoff Depth=1.15"
Tc=7.0 min CN=81 Runoff=0.58 cfs 0.027 af

**Pond 1P: Filtration Basin** Peak Elev=796.86' Storage=3,312 cf Inflow=2.96 cfs 0.143 af
Outflow=0.75 cfs 0.142 af

**Link 10L: Proposed On-Site Outfall** Inflow=0.82 cfs 0.154 af
Primary=0.82 cfs 0.154 af

**Link 11L: Proposed Off-Site Outfall** Inflow=0.58 cfs 0.027 af
Primary=0.58 cfs 0.027 af

**Link 12L: Total Proposed Outfall** Inflow=1.00 cfs 0.181 af
Primary=1.00 cfs 0.181 af

**Total Runoff Area = 1.290 ac Runoff Volume = 0.182 af Average Runoff Depth = 1.69"**
**41.44% Pervious = 0.534 ac 58.56% Impervious = 0.755 ac**

## Summary for Subcatchment 10S: Proposed On-Site to Pond

Runoff = 2.96 cfs @ 12.14 hrs, Volume= 0.143 af, Depth= 1.88"
Routed to Pond 1P : Filtration Basin

Runoff by SCS TR-20 method, UH=SCS, Weighted-CN, Time Span= 0.01-150.00 hrs, dt= 0.01 hrs
MSE 24-hr 3 2-Year Rainfall=2.79"

| Area (sf) | CN | Description |
|---|---|---|
| 12,365 | 74 | >75% Grass cover, Good, HSG C |
| 27,352 | 98 | Paved parking, HSG C |
| 39,717 | 91 | Weighted Average |
| 12,365 | 74 | 31.13% Pervious Area |
| 27,352 | 98 | 68.87% Impervious Area |

| Tc (min) | Length (feet) | Slope (ft/ft) | Velocity (ft/sec) | Capacity (cfs) | Description |
|---|---|---|---|---|---|
| 7.0 | | | | | **Direct Entry,** |

## Subcatchment 10S: Proposed On-Site to Pond

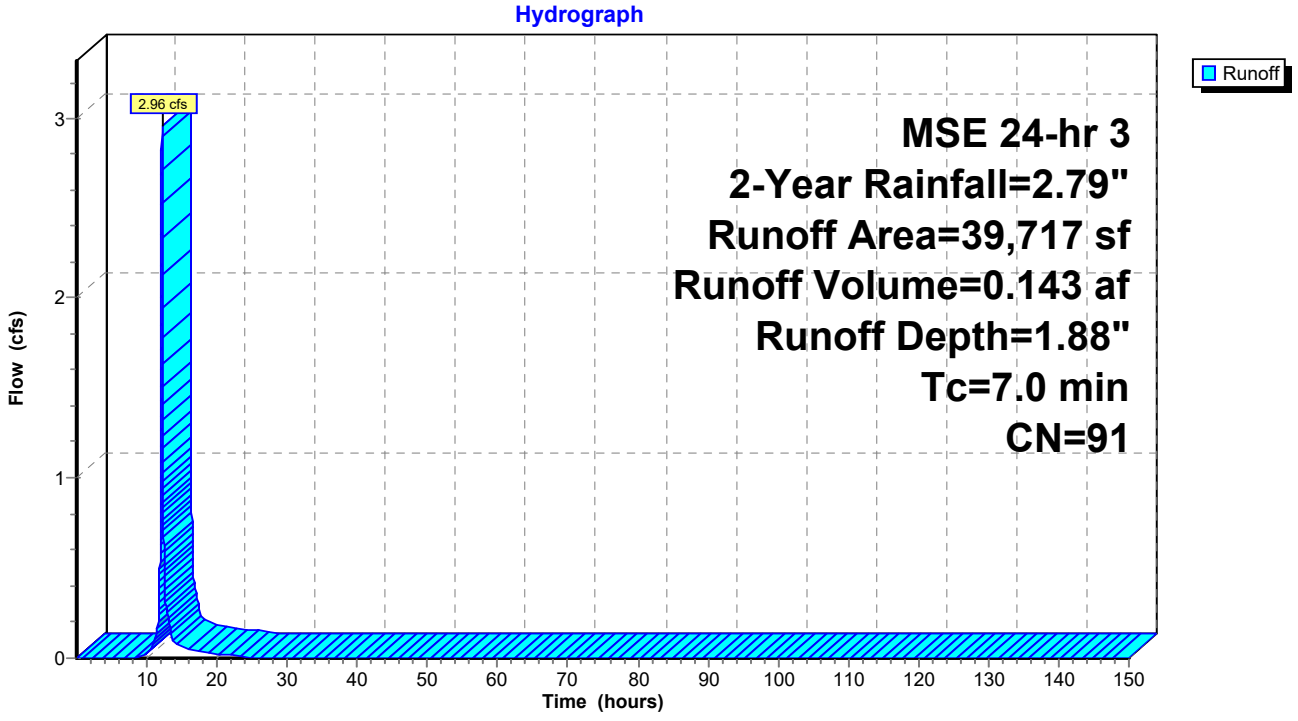

## Summary for Subcatchment 11S: Proposed On-Site to Road

Runoff = 0.25 cfs @ 12.14 hrs, Volume= 0.012 af, Depth= 1.48"
Routed to Link 10L : Proposed On-Site Outfall

Runoff by SCS TR-20 method, UH=SCS, Weighted-CN, Time Span= 0.01-150.00 hrs, dt= 0.01 hrs
MSE 24-hr 3 2-Year Rainfall=2.79"

| Area (sf) | CN | Description |
|---|---|---|
| 2,088 | 74 | >75% Grass cover, Good, HSG C |
| 2,072 | 98 | Paved parking, HSG C |
| 4,160 | 86 | Weighted Average |
| 2,088 | 74 | 50.19% Pervious Area |
| 2,072 | 98 | 49.81% Impervious Area |

| Tc (min) | Length (feet) | Slope (ft/ft) | Velocity (ft/sec) | Capacity (cfs) | Description |
|---|---|---|---|---|---|
| 7.0 | | | | | **Direct Entry,** |

## Subcatchment 11S: Proposed On-Site to Road

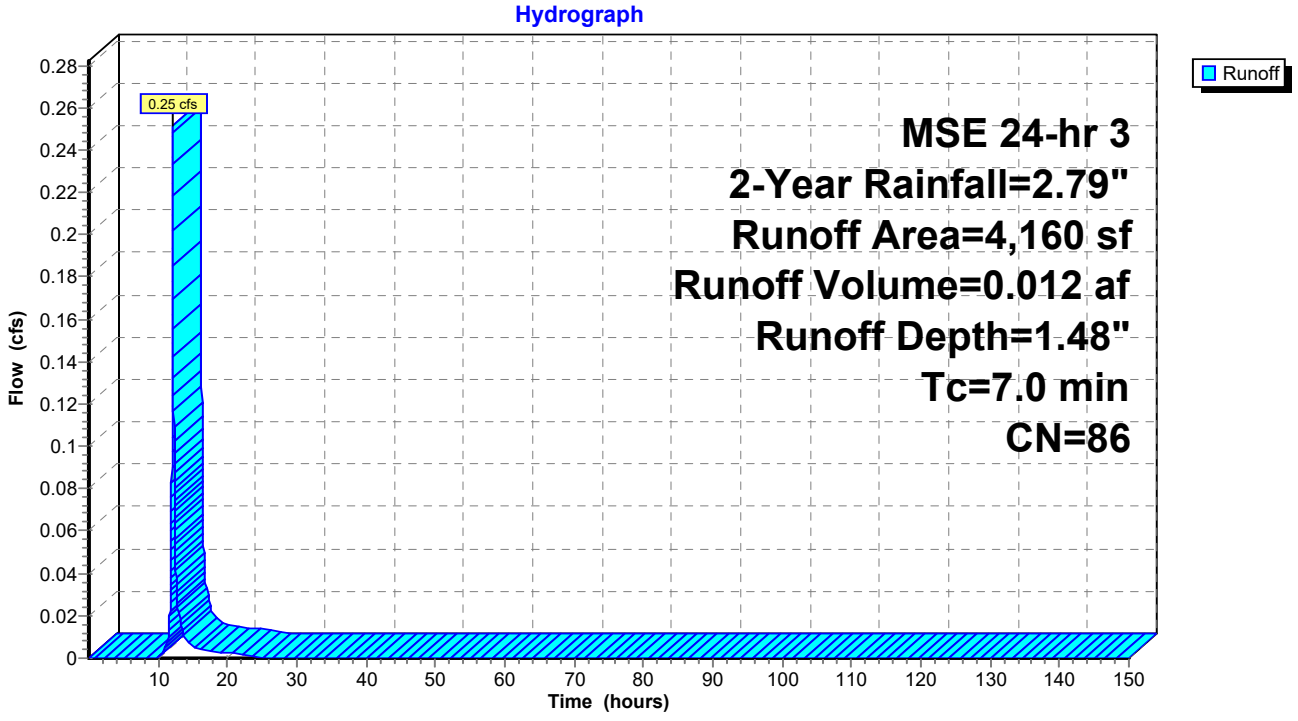

## Summary for Subcatchment 12S: Proposed Off-Site

Runoff = 0.58 cfs @ 12.15 hrs, Volume= 0.027 af, Depth= 1.15"
Routed to Link 11L : Proposed Off-Site Outfall

Runoff by SCS TR-20 method, UH=SCS, Weighted-CN, Time Span= 0.01-150.00 hrs, dt= 0.01 hrs
MSE 24-hr 3 2-Year Rainfall=2.79"

| Area (sf) | CN | Description |
|---|---|---|
| 8,827 | 74 | >75% Grass cover, Good, HSG C |
| 3,478 | 98 | Paved parking, HSG C |
| 12,305 | 81 | Weighted Average |
| 8,827 | 74 | 71.74% Pervious Area |
| 3,478 | 98 | 28.26% Impervious Area |

| Tc (min) | Length (feet) | Slope (ft/ft) | Velocity (ft/sec) | Capacity (cfs) | Description |
|---|---|---|---|---|---|
| 7.0 | | | | | **Direct Entry,** |

## Subcatchment 12S: Proposed Off-Site

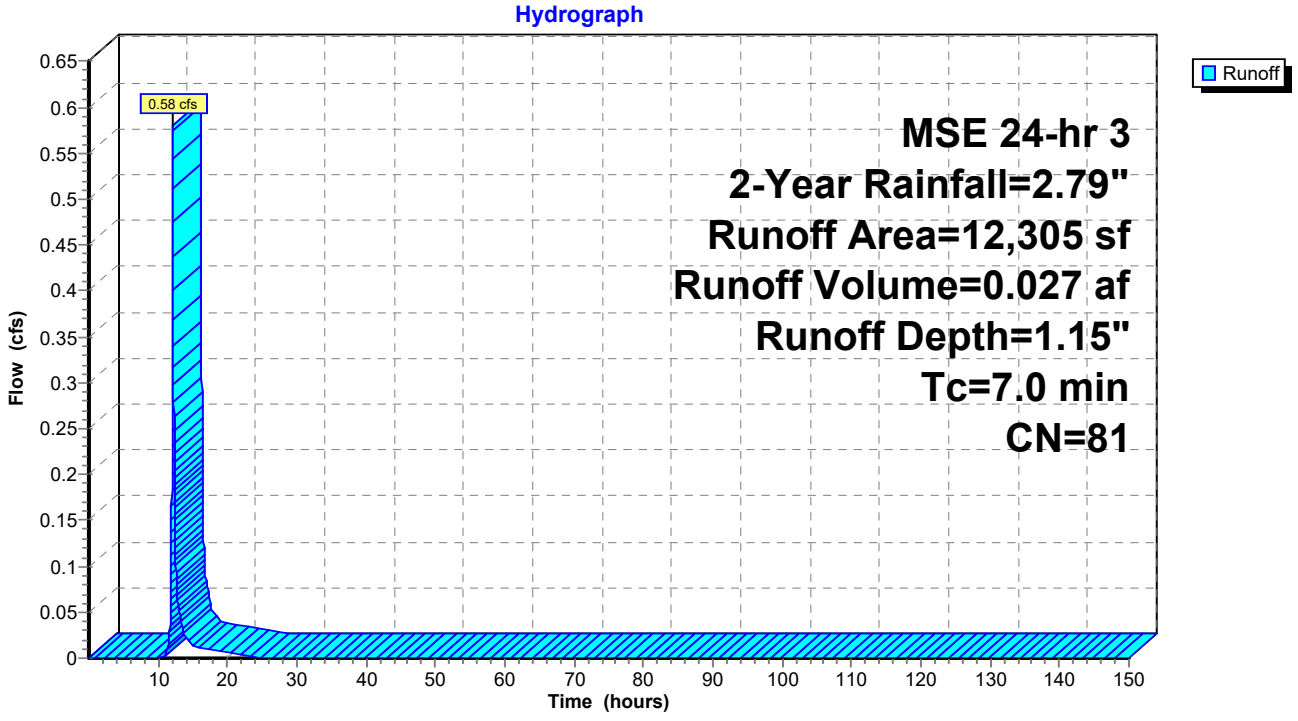

## Summary for Pond 1P: Filtration Basin

Inflow Area = 0.912 ac, 68.87% Impervious, Inflow Depth = 1.88" for 2-Year event
Inflow = 2.96 cfs @ 12.14 hrs, Volume= 0.143 af
Outflow = 0.75 cfs @ 12.38 hrs, Volume= 0.142 af, Atten= 75%, Lag= 14.0 min
Primary = 0.75 cfs @ 12.38 hrs, Volume= 0.142 af
Routed to Link 10L : Proposed On-Site Outfall

Routing by Dyn-Stor-Ind method, Time Span= 0.01-150.00 hrs, dt= 0.01 hrs
Peak Elev= 796.86' @ 12.38 hrs Surf.Area= 2,473 sf Storage= 3,312 cf

Plug-Flow detention time= 739.7 min calculated for 0.142 af (100% of inflow)
Center-of-Mass det. time= 739.2 min ( 1,529.8 - 790.6 )

| Volume | Invert | Avail.Storage | Storage Description |
|---|---|---|---|
| #1 | 793.00' | 1,090 cf | **Filtration Media (Irregular)** Listed below (Recalc) |
| #2 | 795.00' | 6,222 cf | **Pond (Irregular)** Listed below (Recalc) |
| | | 7,312 cf | Total Available Storage |

| Elevation (feet) | Surf.Area (sq-ft) | Perim. (feet) | Inc.Store (cubic-feet) | Cum.Store (cubic-feet) | Wet.Area (sq-ft) |
|---|---|---|---|---|---|
| 793.00 | 545 | 202.7 | 0 | 0 | 545 |
| 795.00 | 545 | 202.7 | 1,090 | 1,090 | 950 |

| Elevation (feet) | Surf.Area (sq-ft) | Perim. (feet) | Inc.Store (cubic-feet) | Cum.Store (cubic-feet) | Wet.Area (sq-ft) |
|---|---|---|---|---|---|
| 795.00 | 545 | 202.7 | 0 | 0 | 545 |
| 795.50 | 858 | 215.3 | 348 | 348 | 977 |
| 796.00 | 1,221 | 245.9 | 517 | 865 | 2,106 |
| 796.50 | 1,631 | 273.6 | 711 | 1,575 | 3,258 |
| 797.00 | 2,046 | 282.5 | 917 | 2,493 | 3,676 |
| 797.50 | 2,479 | 292.2 | 1,130 | 3,622 | 4,142 |
| 798.00 | 2,932 | 303.0 | 1,351 | 4,973 | 4,675 |
| 798.40 | 3,315 | 312.7 | 1,249 | 6,222 | 5,166 |

| Device | Routing | Invert | Outlet Devices |
|---|---|---|---|
| #1 | Primary | 793.00' | **18.0" Round Culvert**<br>L= 196.6' RCP, square edge headwall, Ke= 0.500<br>Inlet / Outlet Invert= 793.00' / 790.05' S= 0.0150 '/' Cc= 0.900<br>n= 0.012 Concrete pipe, finished, Flow Area= 1.77 sf |
| #2 | Primary | 796.72' | **4.0' long Sharp-Crested Rectangular Weir** 2 End Contraction(s) |
| #3 | Device 4 | 793.00' | **0.800 in/hr Exfiltration over Surface area** |
| #4 | Device 1 | 793.00' | **6.0" Round 6" DT** L= 100.0' Ke= 0.900<br>Inlet / Outlet Invert= 793.00' / 793.00' S= 0.0000 '/' Cc= 0.900<br>n= 0.010 PVC, smooth interior, Flow Area= 0.20 sf |

**Primary OutFlow** Max=0.75 cfs @ 12.38 hrs HW=796.86' TW=0.00' (Dynamic Tailwater)
- **1=Culvert** (Passes 0.05 cfs of 15.01 cfs potential flow)
  - **4=6" DT** (Passes 0.05 cfs of 1.13 cfs potential flow)
    - **3=Exfiltration** (Exfiltration Controls 0.05 cfs)
- **2=Sharp-Crested Rectangular Weir** (Weir Controls 0.71 cfs @ 1.24 fps)

## Pond 1P: Filtration Basin

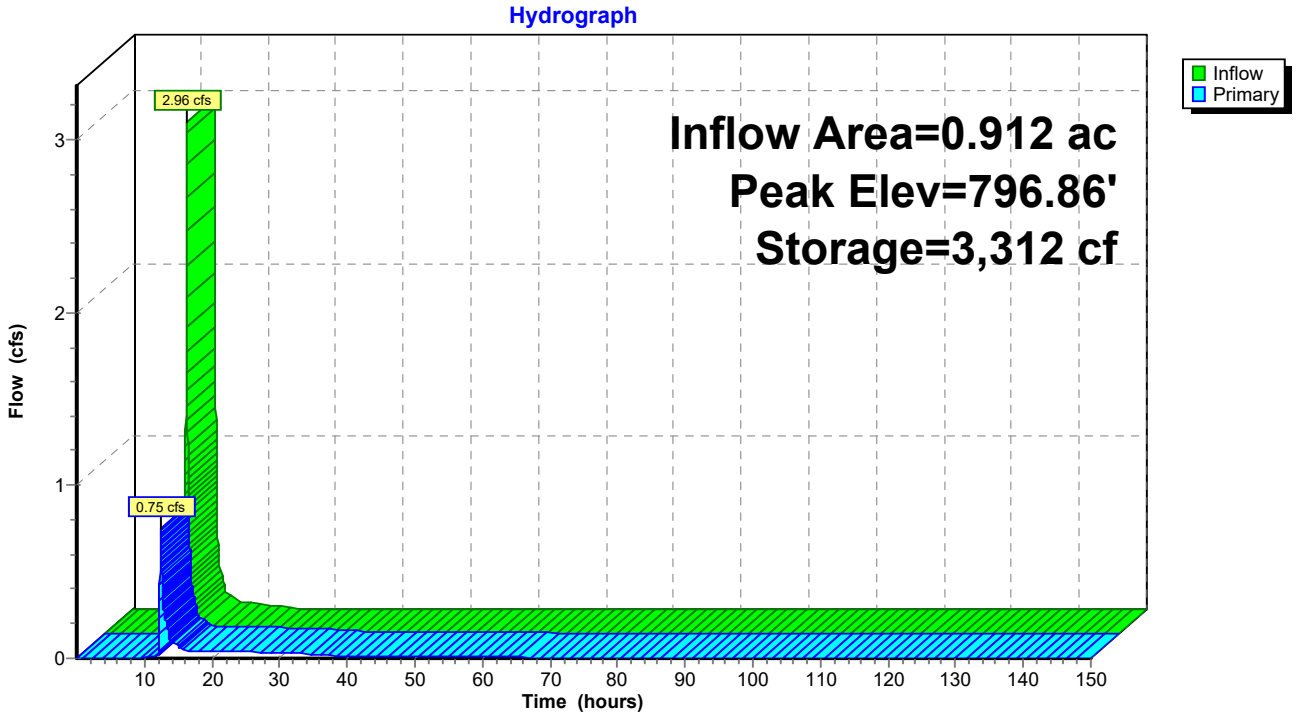

## Summary for Link 10L: Proposed On-Site Outfall

Inflow Area = 1.007 ac, 67.06% Impervious, Inflow Depth = 1.84" for 2-Year event
Inflow = 0.82 cfs @ 12.37 hrs, Volume= 0.154 af
Primary = 0.82 cfs @ 12.37 hrs, Volume= 0.154 af, Atten= 0%, Lag= 0.0 min
Routed to Link 12L : Total Proposed Outfall

Primary outflow = Inflow, Time Span= 0.01-150.00 hrs, dt= 0.01 hrs

## Link 10L: Proposed On-Site Outfall

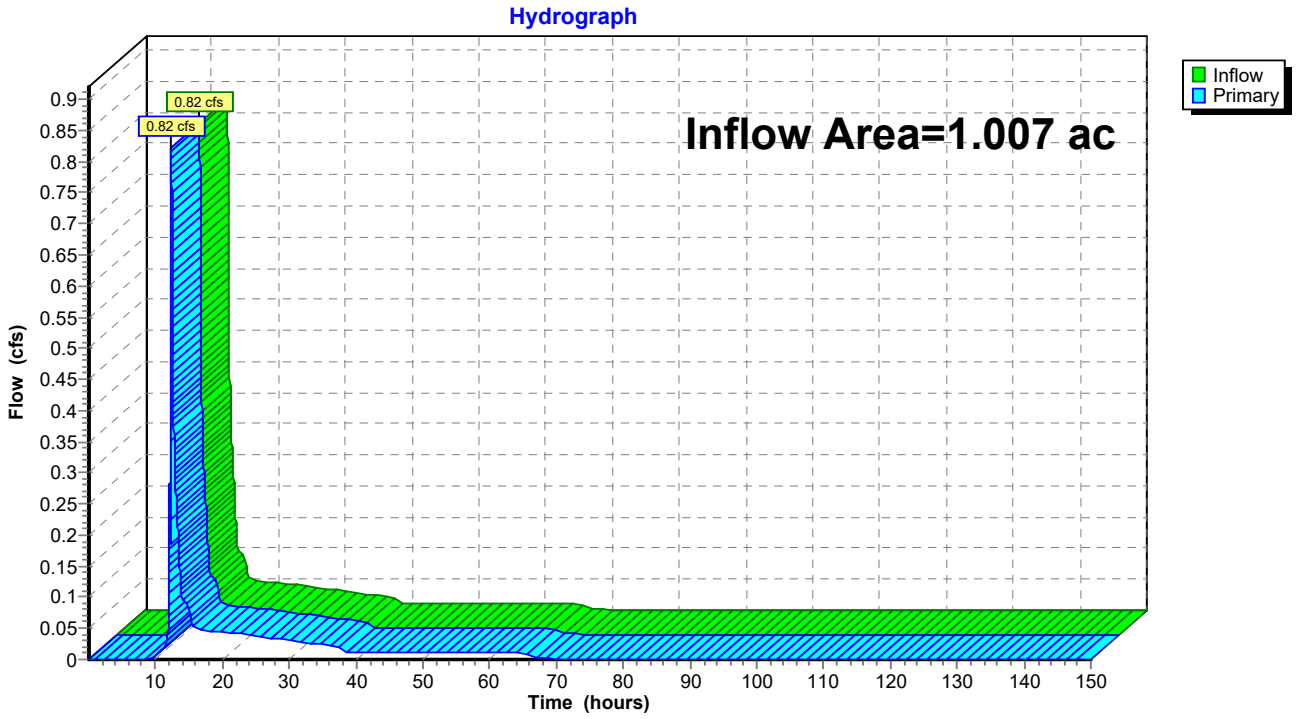

## Summary for Link 11L: Proposed Off-Site Outfall

Inflow Area = 0.282 ac, 28.26% Impervious, Inflow Depth = 1.15" for 2-Year event
Inflow = 0.58 cfs @ 12.15 hrs, Volume= 0.027 af
Primary = 0.58 cfs @ 12.15 hrs, Volume= 0.027 af, Atten= 0%, Lag= 0.0 min
Routed to Link 12L : Total Proposed Outfall

Primary outflow = Inflow, Time Span= 0.01-150.00 hrs, dt= 0.01 hrs

## Link 11L: Proposed Off-Site Outfall

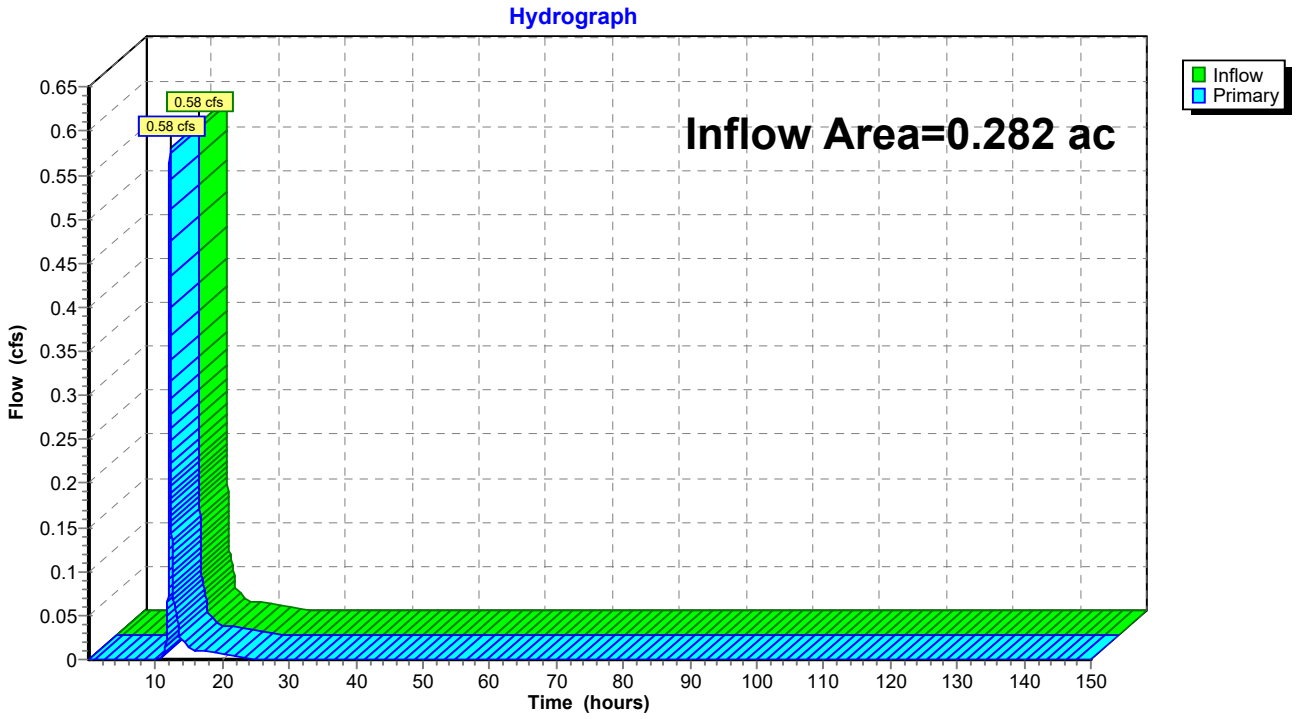

## Summary for Link 12L: Total Proposed Outfall

Inflow Area = 1.290 ac, 58.56% Impervious, Inflow Depth = 1.69" for 2-Year event
Inflow = 1.00 cfs @ 12.36 hrs, Volume= 0.181 af
Primary = 1.00 cfs @ 12.36 hrs, Volume= 0.181 af, Atten= 0%, Lag= 0.0 min

Primary outflow = Inflow, Time Span= 0.01-150.00 hrs, dt= 0.01 hrs

## Link 12L: Total Proposed Outfall

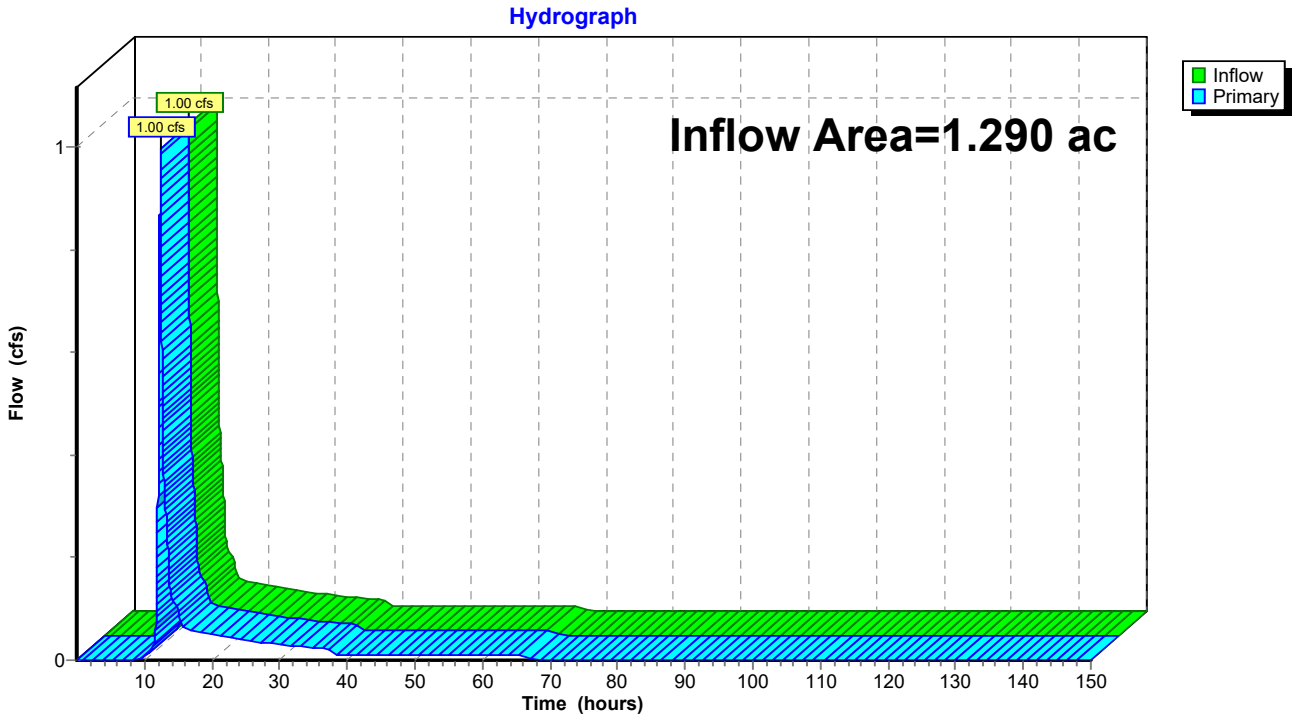

Time span=0.01-150.00 hrs, dt=0.01 hrs, 15000 points
Runoff by SCS TR-20 method, UH=SCS, Weighted-CN
Reach routing by Dyn-Stor-Ind method - Pond routing by Dyn-Stor-Ind method

**Subcatchment10S: Proposed On-Site to** Runoff Area=39,717 sf 68.87% Impervious Runoff Depth=3.16"
Tc=7.0 min CN=91 Runoff=4.85 cfs 0.240 af

**Subcatchment11S: Proposed On-Site to** Runoff Area=4,160 sf 49.81% Impervious Runoff Depth=2.68"
Tc=7.0 min CN=86 Runoff=0.45 cfs 0.021 af

**Subcatchment12S: Proposed Off-Site** Runoff Area=12,305 sf 28.26% Impervious Runoff Depth=2.25"
Tc=7.0 min CN=81 Runoff=1.13 cfs 0.053 af

**Pond 1P: Filtration Basin** Peak Elev=797.17' Storage=3,939 cf Inflow=4.85 cfs 0.240 af
Outflow=3.89 cfs 0.240 af

**Link 10L: Proposed On-Site Outfall** Inflow=4.26 cfs 0.261 af
Primary=4.26 cfs 0.261 af

**Link 11L: Proposed Off-Site Outfall** Inflow=1.13 cfs 0.053 af
Primary=1.13 cfs 0.053 af

**Link 12L: Total Proposed Outfall** Inflow=5.24 cfs 0.314 af
Primary=5.24 cfs 0.314 af

**Total Runoff Area = 1.290 ac Runoff Volume = 0.314 af Average Runoff Depth = 2.93"**
**41.44% Pervious = 0.534 ac 58.56% Impervious = 0.755 ac**

## Summary for Subcatchment 10S: Proposed On-Site to Pond

Runoff = 4.85 cfs @ 12.14 hrs, Volume= 0.240 af, Depth= 3.16"
Routed to Pond 1P : Filtration Basin

Runoff by SCS TR-20 method, UH=SCS, Weighted-CN, Time Span= 0.01-150.00 hrs, dt= 0.01 hrs
MSE 24-hr 3 10-Year Rainfall=4.15"

| Area (sf) | CN | Description |
|---|---|---|
| 12,365 | 74 | >75% Grass cover, Good, HSG C |
| 27,352 | 98 | Paved parking, HSG C |
| 39,717 | 91 | Weighted Average |
| 12,365 | 74 | 31.13% Pervious Area |
| 27,352 | 98 | 68.87% Impervious Area |

| Tc (min) | Length (feet) | Slope (ft/ft) | Velocity (ft/sec) | Capacity (cfs) | Description |
|---|---|---|---|---|---|
| 7.0 | | | | | **Direct Entry,** |

## Subcatchment 10S: Proposed On-Site to Pond

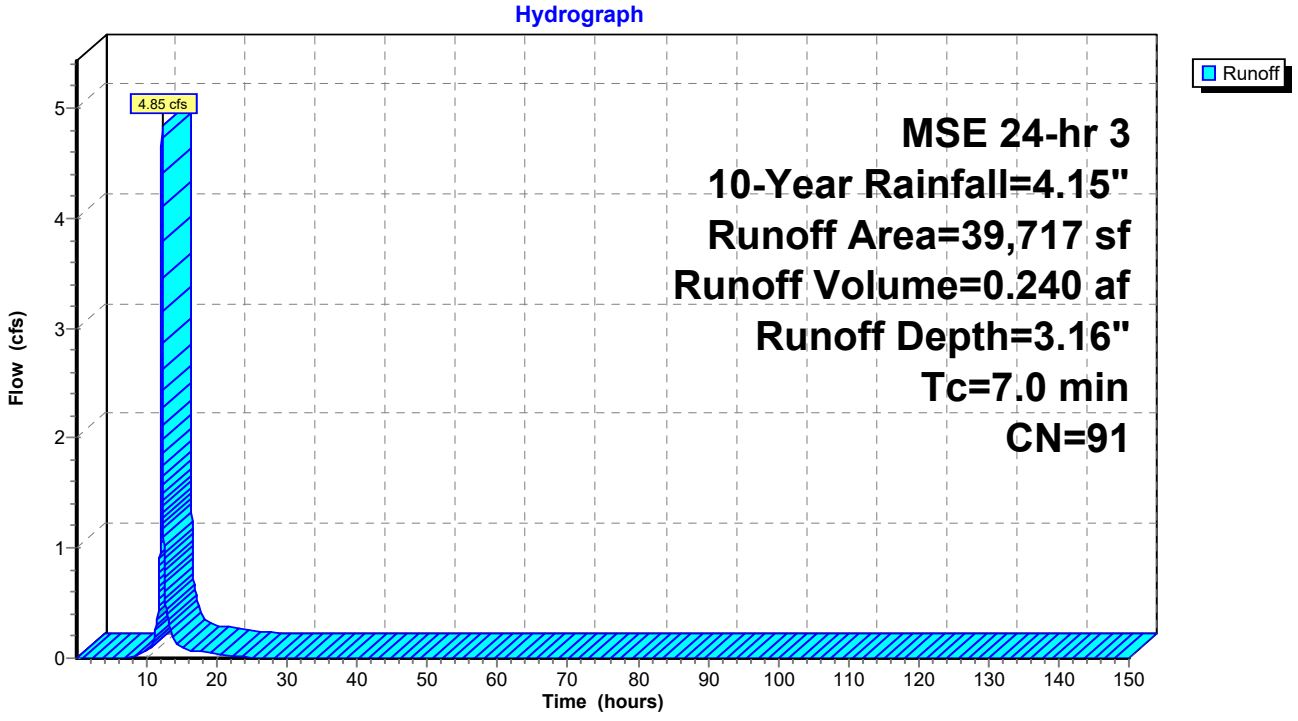

## Summary for Subcatchment 11S: Proposed On-Site to Road

Runoff = 0.45 cfs @ 12.14 hrs, Volume= 0.021 af, Depth= 2.68"
Routed to Link 10L : Proposed On-Site Outfall

Runoff by SCS TR-20 method, UH=SCS, Weighted-CN, Time Span= 0.01-150.00 hrs, dt= 0.01 hrs
MSE 24-hr 3 10-Year Rainfall=4.15"

| Area (sf) | CN | Description |
|---|---|---|
| 2,088 | 74 | >75% Grass cover, Good, HSG C |
| 2,072 | 98 | Paved parking, HSG C |
| 4,160 | 86 | Weighted Average |
| 2,088 | 74 | 50.19% Pervious Area |
| 2,072 | 98 | 49.81% Impervious Area |

| Tc (min) | Length (feet) | Slope (ft/ft) | Velocity (ft/sec) | Capacity (cfs) | Description |
|---|---|---|---|---|---|
| 7.0 | | | | | **Direct Entry,** |

## Subcatchment 11S: Proposed On-Site to Road

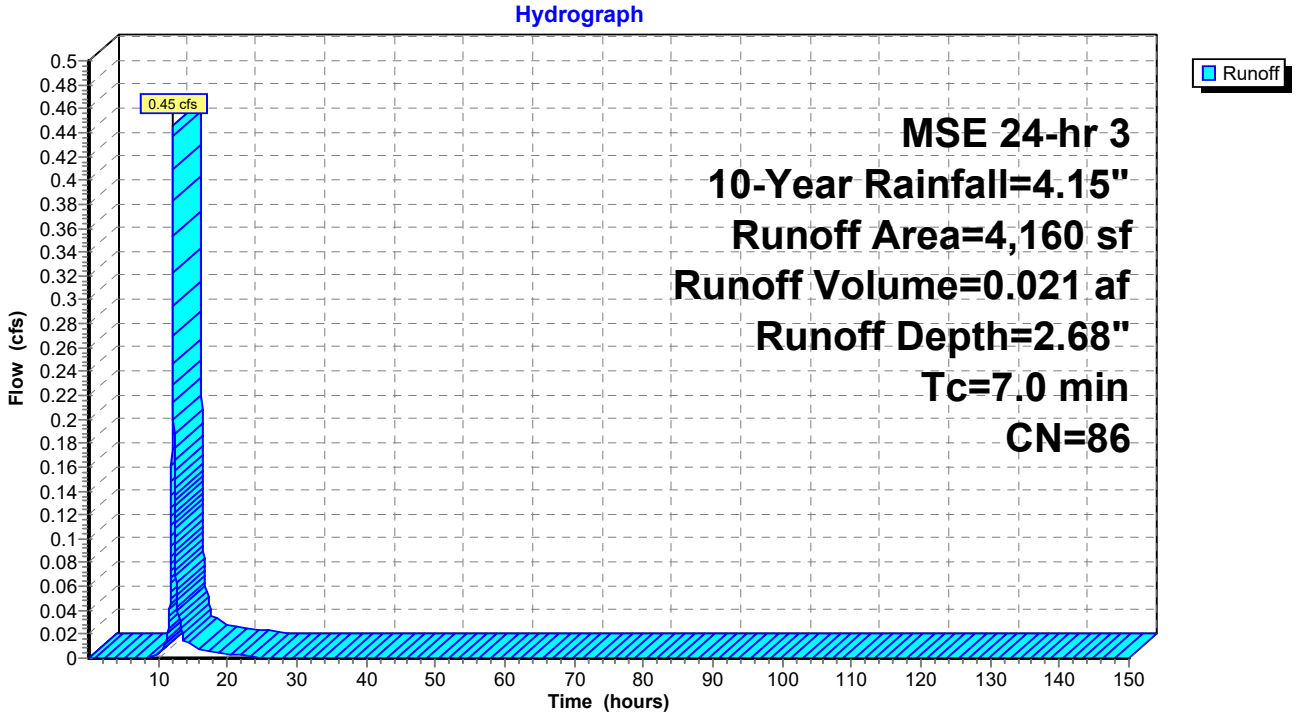

## Summary for Subcatchment 12S: Proposed Off-Site

Runoff = 1.13 cfs @ 12.14 hrs, Volume= 0.053 af, Depth= 2.25"
Routed to Link 11L : Proposed Off-Site Outfall

Runoff by SCS TR-20 method, UH=SCS, Weighted-CN, Time Span= 0.01-150.00 hrs, dt= 0.01 hrs
MSE 24-hr 3 10-Year Rainfall=4.15"

| Area (sf) | CN | Description |
|---|---|---|
| 8,827 | 74 | >75% Grass cover, Good, HSG C |
| 3,478 | 98 | Paved parking, HSG C |
| 12,305 | 81 | Weighted Average |
| 8,827 | 74 | 71.74% Pervious Area |
| 3,478 | 98 | 28.26% Impervious Area |

| Tc (min) | Length (feet) | Slope (ft/ft) | Velocity (ft/sec) | Capacity (cfs) | Description |
|---|---|---|---|---|---|
| 7.0 | | | | | **Direct Entry,** |

## Subcatchment 12S: Proposed Off-Site

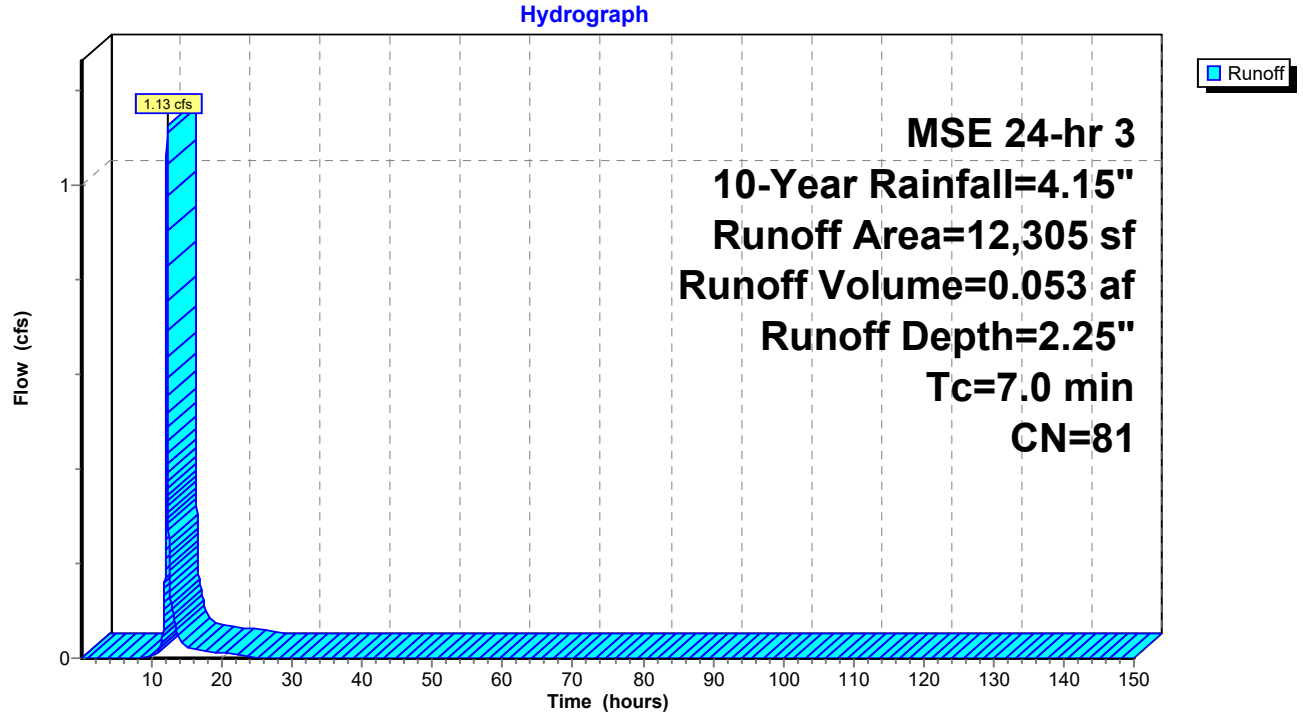

## Summary for Pond 1P: Filtration Basin

Inflow Area = 0.912 ac, 68.87% Impervious, Inflow Depth = 3.16" for 10-Year event
Inflow = 4.85 cfs @ 12.14 hrs, Volume= 0.240 af
Outflow = 3.89 cfs @ 12.19 hrs, Volume= 0.240 af, Atten= 20%, Lag= 2.8 min
Primary = 3.89 cfs @ 12.19 hrs, Volume= 0.240 af
Routed to Link 10L : Proposed On-Site Outfall

Routing by Dyn-Stor-Ind method, Time Span= 0.01-150.00 hrs, dt= 0.01 hrs
Peak Elev= 797.17' @ 12.19 hrs Surf.Area= 2,732 sf Storage= 3,939 cf

Plug-Flow detention time= 477.5 min calculated for 0.240 af (100% of inflow)
Center-of-Mass det. time= 477.2 min ( 1,257.3 - 780.2 )

| Volume | Invert | Avail.Storage | Storage Description |
|---|---|---|---|
| #1 | 793.00' | 1,090 cf | **Filtration Media (Irregular)** Listed below (Recalc) |
| #2 | 795.00' | 6,222 cf | **Pond (Irregular)** Listed below (Recalc) |
| | | 7,312 cf | Total Available Storage |

| Elevation (feet) | Surf.Area (sq-ft) | Perim. (feet) | Inc.Store (cubic-feet) | Cum.Store (cubic-feet) | Wet.Area (sq-ft) |
|---|---|---|---|---|---|
| 793.00 | 545 | 202.7 | 0 | 0 | 545 |
| 795.00 | 545 | 202.7 | 1,090 | 1,090 | 950 |

| Elevation (feet) | Surf.Area (sq-ft) | Perim. (feet) | Inc.Store (cubic-feet) | Cum.Store (cubic-feet) | Wet.Area (sq-ft) |
|---|---|---|---|---|---|
| 795.00 | 545 | 202.7 | 0 | 0 | 545 |
| 795.50 | 858 | 215.3 | 348 | 348 | 977 |
| 796.00 | 1,221 | 245.9 | 517 | 865 | 2,106 |
| 796.50 | 1,631 | 273.6 | 711 | 1,575 | 3,258 |
| 797.00 | 2,046 | 282.5 | 917 | 2,493 | 3,676 |
| 797.50 | 2,479 | 292.2 | 1,130 | 3,622 | 4,142 |
| 798.00 | 2,932 | 303.0 | 1,351 | 4,973 | 4,675 |
| 798.40 | 3,315 | 312.7 | 1,249 | 6,222 | 5,166 |

| Device | Routing | Invert | Outlet Devices |
|---|---|---|---|
| #1 | Primary | 793.00' | **18.0" Round Culvert**<br>L= 196.6' RCP, square edge headwall, Ke= 0.500<br>Inlet / Outlet Invert= 793.00' / 790.05' S= 0.0150 '/' Cc= 0.900<br>n= 0.012 Concrete pipe, finished, Flow Area= 1.77 sf |
| #2 | Primary | 796.72' | **4.0' long Sharp-Crested Rectangular Weir** 2 End Contraction(s) |
| #3 | Device 4 | 793.00' | **0.800 in/hr Exfiltration over Surface area** |
| #4 | Device 1 | 793.00' | **6.0" Round 6" DT** L= 100.0' Ke= 0.900<br>Inlet / Outlet Invert= 793.00' / 793.00' S= 0.0000 '/' Cc= 0.900<br>n= 0.010 PVC, smooth interior, Flow Area= 0.20 sf |

**Primary OutFlow** Max=3.88 cfs @ 12.19 hrs HW=797.17' TW=0.00' (Dynamic Tailwater)
- **1=Culvert** (Passes 0.05 cfs of 15.73 cfs potential flow)
  - **4=6" DT** (Passes 0.05 cfs of 1.18 cfs potential flow)
    - **3=Exfiltration** (Exfiltration Controls 0.05 cfs)
- **2=Sharp-Crested Rectangular Weir** (Weir Controls 3.83 cfs @ 2.19 fps)

## Pond 1P: Filtration Basin

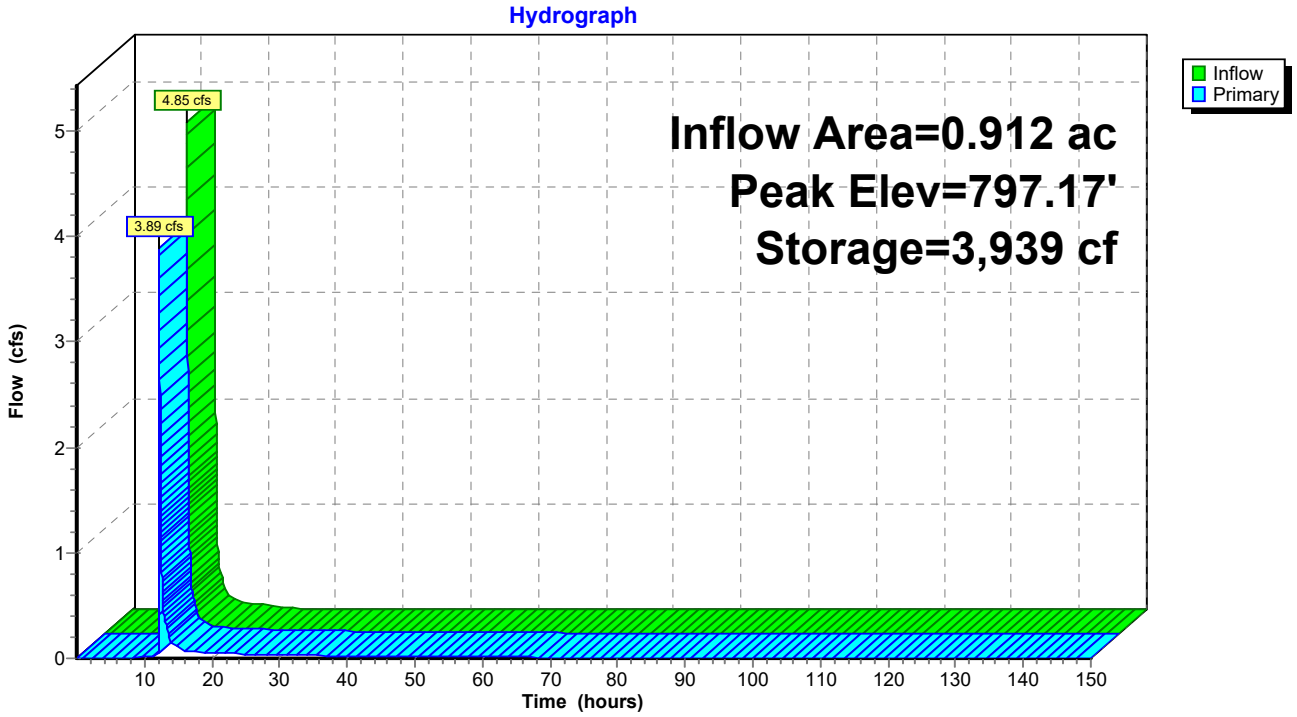

## Summary for Link 10L: Proposed On-Site Outfall

Inflow Area = 1.007 ac, 67.06% Impervious, Inflow Depth = 3.11" for 10-Year event
Inflow = 4.26 cfs @ 12.18 hrs, Volume= 0.261 af
Primary = 4.26 cfs @ 12.18 hrs, Volume= 0.261 af, Atten= 0%, Lag= 0.0 min
Routed to Link 12L : Total Proposed Outfall

Primary outflow = Inflow, Time Span= 0.01-150.00 hrs, dt= 0.01 hrs

## Link 10L: Proposed On-Site Outfall

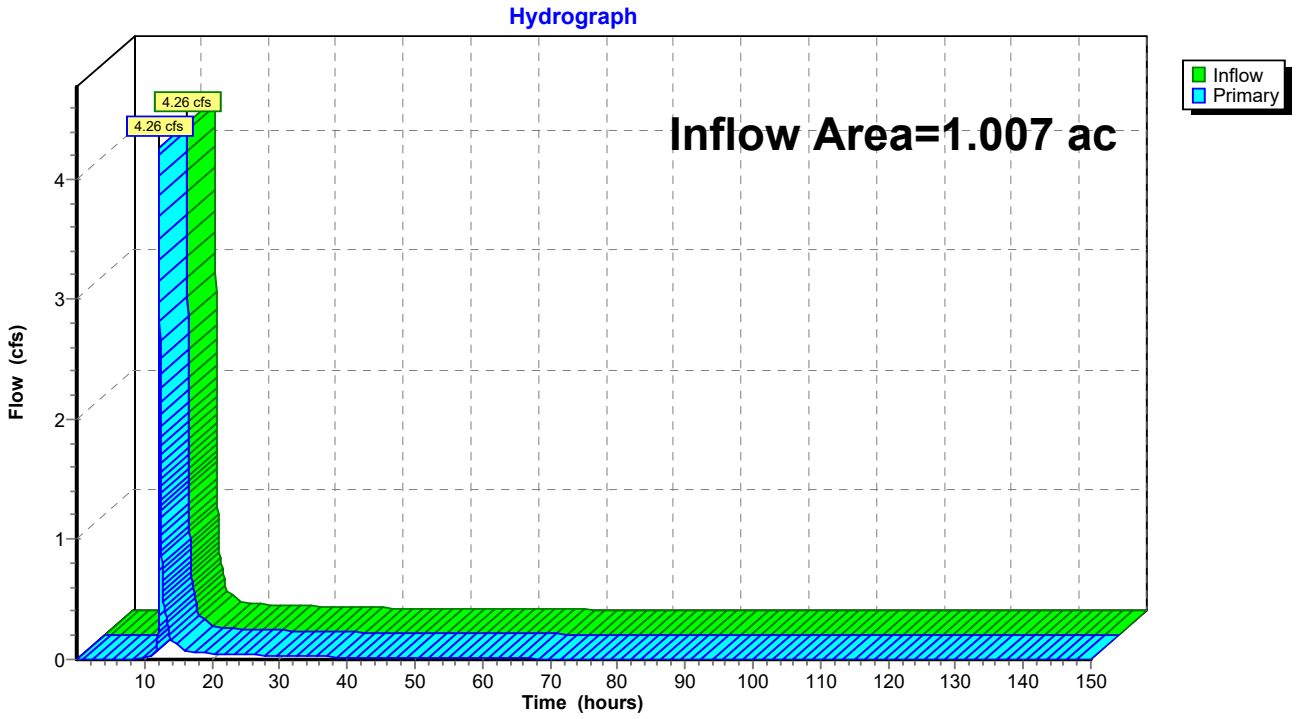

## Summary for Link 11L: Proposed Off-Site Outfall

Inflow Area = 0.282 ac, 28.26% Impervious, Inflow Depth = 2.25" for 10-Year event
Inflow = 1.13 cfs @ 12.14 hrs, Volume= 0.053 af
Primary = 1.13 cfs @ 12.14 hrs, Volume= 0.053 af, Atten= 0%, Lag= 0.0 min
Routed to Link 12L : Total Proposed Outfall

Primary outflow = Inflow, Time Span= 0.01-150.00 hrs, dt= 0.01 hrs

## Link 11L: Proposed Off-Site Outfall

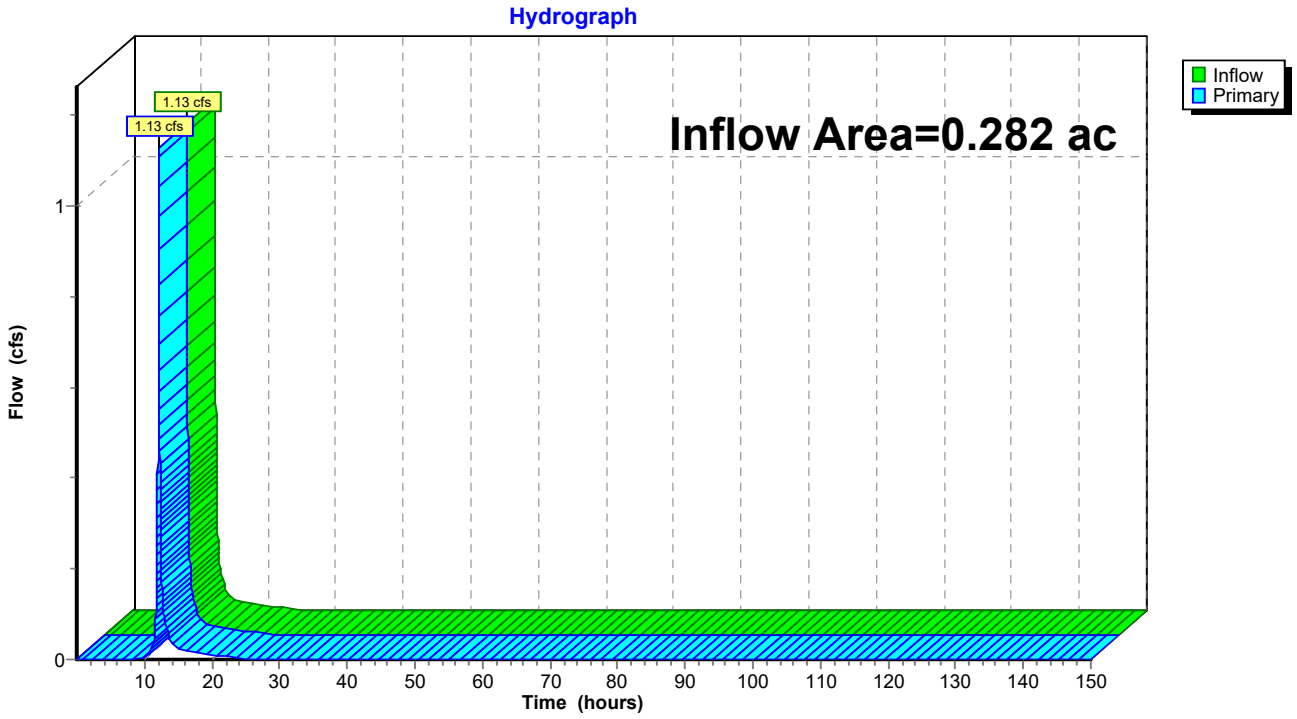

## Summary for Link 12L: Total Proposed Outfall

Inflow Area = 1.290 ac, 58.56% Impervious, Inflow Depth = 2.92" for 10-Year event
Inflow = 5.24 cfs @ 12.17 hrs, Volume= 0.314 af
Primary = 5.24 cfs @ 12.17 hrs, Volume= 0.314 af, Atten= 0%, Lag= 0.0 min

Primary outflow = Inflow, Time Span= 0.01-150.00 hrs, dt= 0.01 hrs

## Link 12L: Total Proposed Outfall

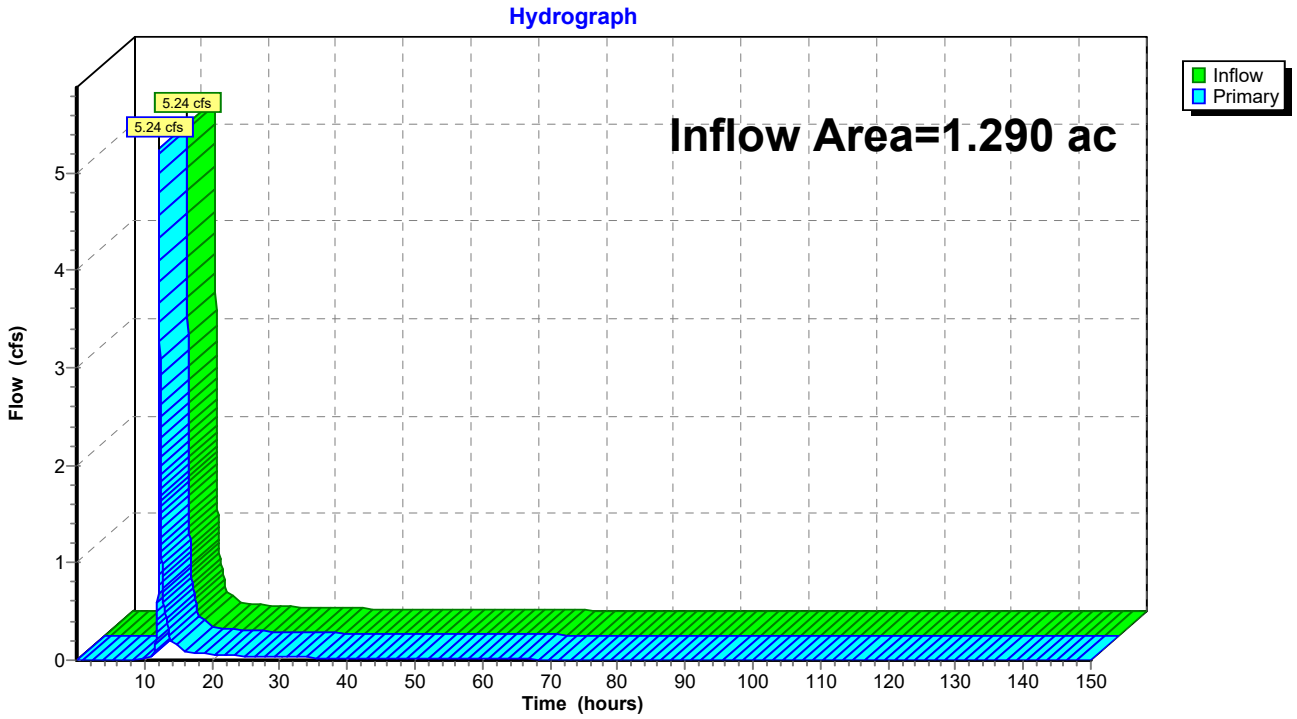

Time span=0.01-150.00 hrs, dt=0.01 hrs, 15000 points
Runoff by SCS TR-20 method, UH=SCS, Weighted-CN
Reach routing by Dyn-Stor-Ind method - Pond routing by Dyn-Stor-Ind method

**Subcatchment10S: Proposed On-Site to** Runoff Area=39,717 sf 68.87% Impervious Runoff Depth=6.33"
Tc=7.0 min CN=91 Runoff=9.29 cfs 0.481 af

**Subcatchment11S: Proposed On-Site to** Runoff Area=4,160 sf 49.81% Impervious Runoff Depth=5.75"
Tc=7.0 min CN=86 Runoff=0.92 cfs 0.046 af

**Subcatchment12S: Proposed Off-Site** Runoff Area=12,305 sf 28.26% Impervious Runoff Depth=5.18"
Tc=7.0 min CN=81 Runoff=2.51 cfs 0.122 af

**Pond 1P: Filtration Basin** Peak Elev=797.48' Storage=4,663 cf Inflow=9.29 cfs 0.481 af
Outflow=8.40 cfs 0.481 af

**Link 10L: Proposed On-Site Outfall** Inflow=9.24 cfs 0.527 af
Primary=9.24 cfs 0.527 af

**Link 11L: Proposed Off-Site Outfall** Inflow=2.51 cfs 0.122 af
Primary=2.51 cfs 0.122 af

**Link 12L: Total Proposed Outfall** Inflow=11.63 cfs 0.649 af
Primary=11.63 cfs 0.649 af

**Total Runoff Area = 1.290 ac Runoff Volume = 0.649 af Average Runoff Depth = 6.04"**
**41.44% Pervious = 0.534 ac 58.56% Impervious = 0.755 ac**

## Summary for Subcatchment 10S: Proposed On-Site to Pond

Runoff = 9.29 cfs @ 12.14 hrs, Volume= 0.481 af, Depth= 6.33"
Routed to Pond 1P : Filtration Basin

Runoff by SCS TR-20 method, UH=SCS, Weighted-CN, Time Span= 0.01-150.00 hrs, dt= 0.01 hrs
MSE 24-hr 3 100-Year Rainfall=7.40"

| Area (sf) | CN | Description |
|---|---|---|
| 12,365 | 74 | >75% Grass cover, Good, HSG C |
| 27,352 | 98 | Paved parking, HSG C |
| 39,717 | 91 | Weighted Average |
| 12,365 | 74 | 31.13% Pervious Area |
| 27,352 | 98 | 68.87% Impervious Area |

| Tc (min) | Length (feet) | Slope (ft/ft) | Velocity (ft/sec) | Capacity (cfs) | Description |
|---|---|---|---|---|---|
| 7.0 | | | | | **Direct Entry,** |

## Subcatchment 10S: Proposed On-Site to Pond

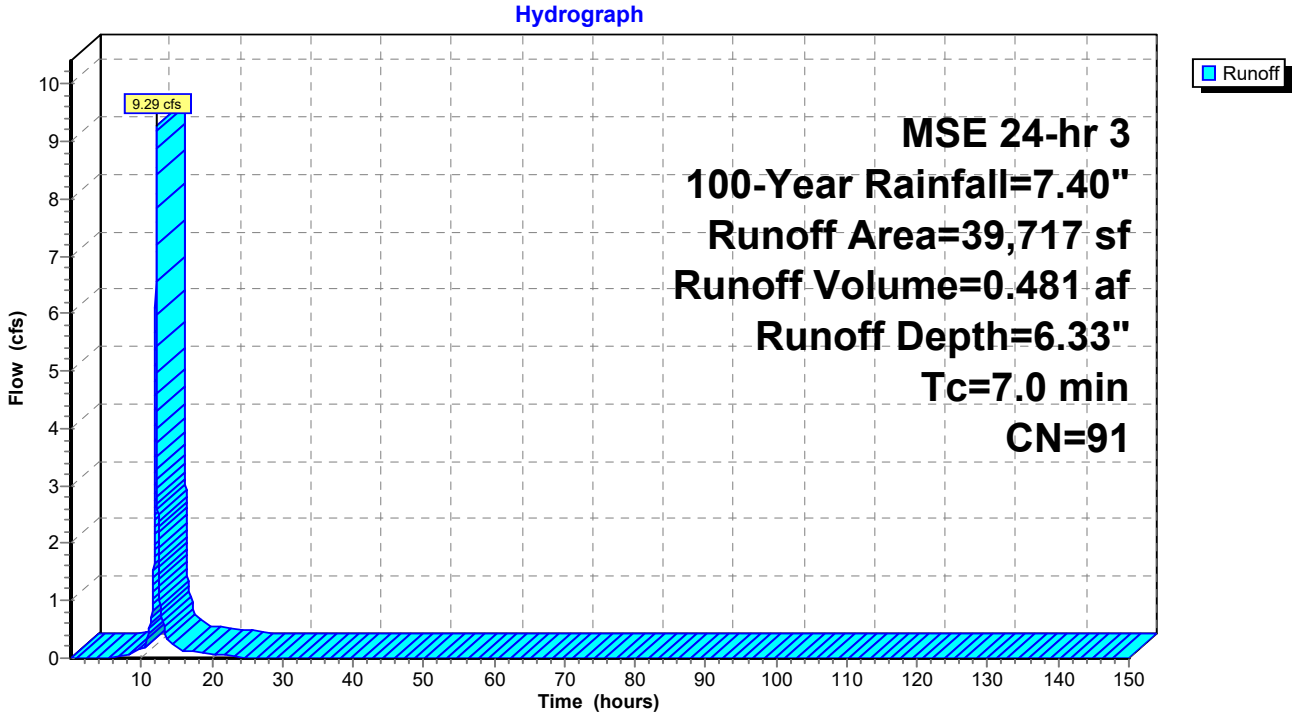

## Summary for Subcatchment 11S: Proposed On-Site to Road

Runoff = 0.92 cfs @ 12.14 hrs, Volume= 0.046 af, Depth= 5.75"
Routed to Link 10L : Proposed On-Site Outfall

Runoff by SCS TR-20 method, UH=SCS, Weighted-CN, Time Span= 0.01-150.00 hrs, dt= 0.01 hrs
MSE 24-hr 3 100-Year Rainfall=7.40"

| Area (sf) | CN | Description |
|---|---|---|
| 2,088 | 74 | >75% Grass cover, Good, HSG C |
| 2,072 | 98 | Paved parking, HSG C |
| 4,160 | 86 | Weighted Average |
| 2,088 | 74 | 50.19% Pervious Area |
| 2,072 | 98 | 49.81% Impervious Area |

| Tc (min) | Length (feet) | Slope (ft/ft) | Velocity (ft/sec) | Capacity (cfs) | Description |
|---|---|---|---|---|---|
| 7.0 | | | | | **Direct Entry,** |

## Subcatchment 11S: Proposed On-Site to Road

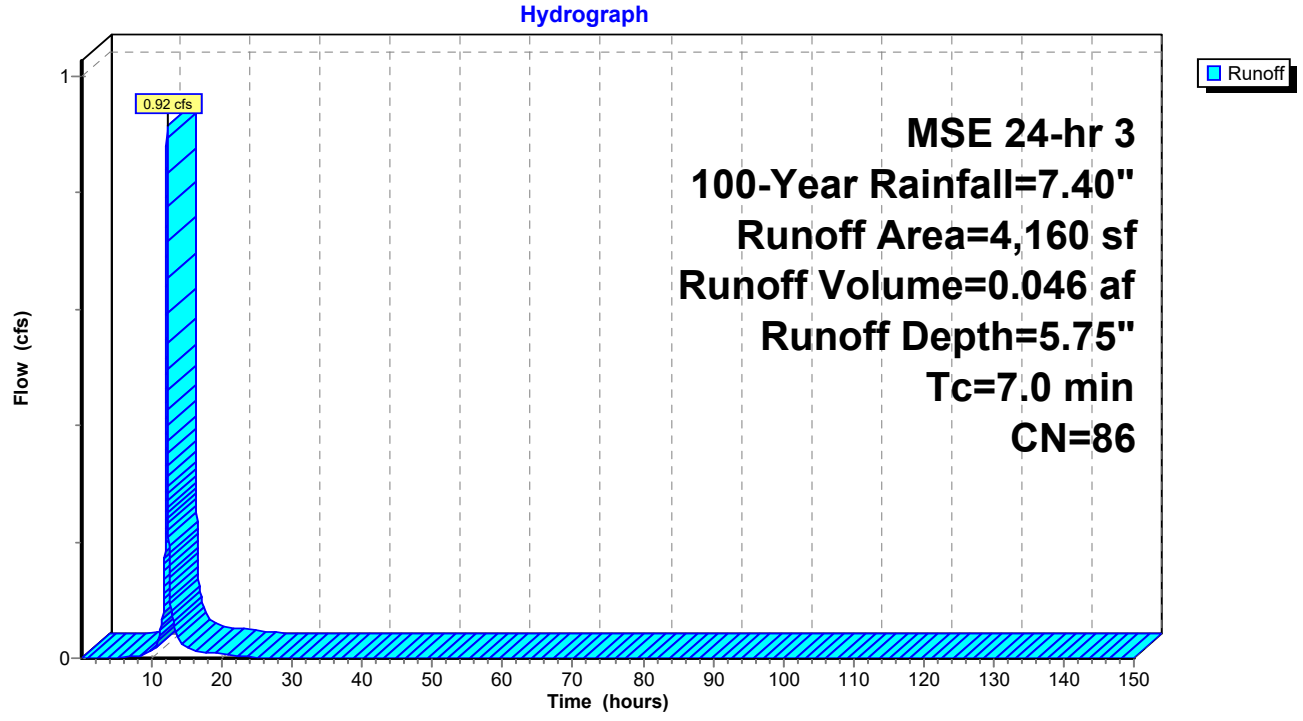

## Summary for Subcatchment 12S: Proposed Off-Site

Runoff = 2.51 cfs @ 12.14 hrs, Volume= 0.122 af, Depth= 5.18"
Routed to Link 11L : Proposed Off-Site Outfall

Runoff by SCS TR-20 method, UH=SCS, Weighted-CN, Time Span= 0.01-150.00 hrs, dt= 0.01 hrs
MSE 24-hr 3 100-Year Rainfall=7.40"

| Area (sf) | CN | Description |
|---|---|---|
| 8,827 | 74 | >75% Grass cover, Good, HSG C |
| 3,478 | 98 | Paved parking, HSG C |
| 12,305 | 81 | Weighted Average |
| 8,827 | 74 | 71.74% Pervious Area |
| 3,478 | 98 | 28.26% Impervious Area |

| Tc (min) | Length (feet) | Slope (ft/ft) | Velocity (ft/sec) | Capacity (cfs) | Description |
|---|---|---|---|---|---|
| 7.0 | | | | | **Direct Entry,** |

### Subcatchment 12S: Proposed Off-Site

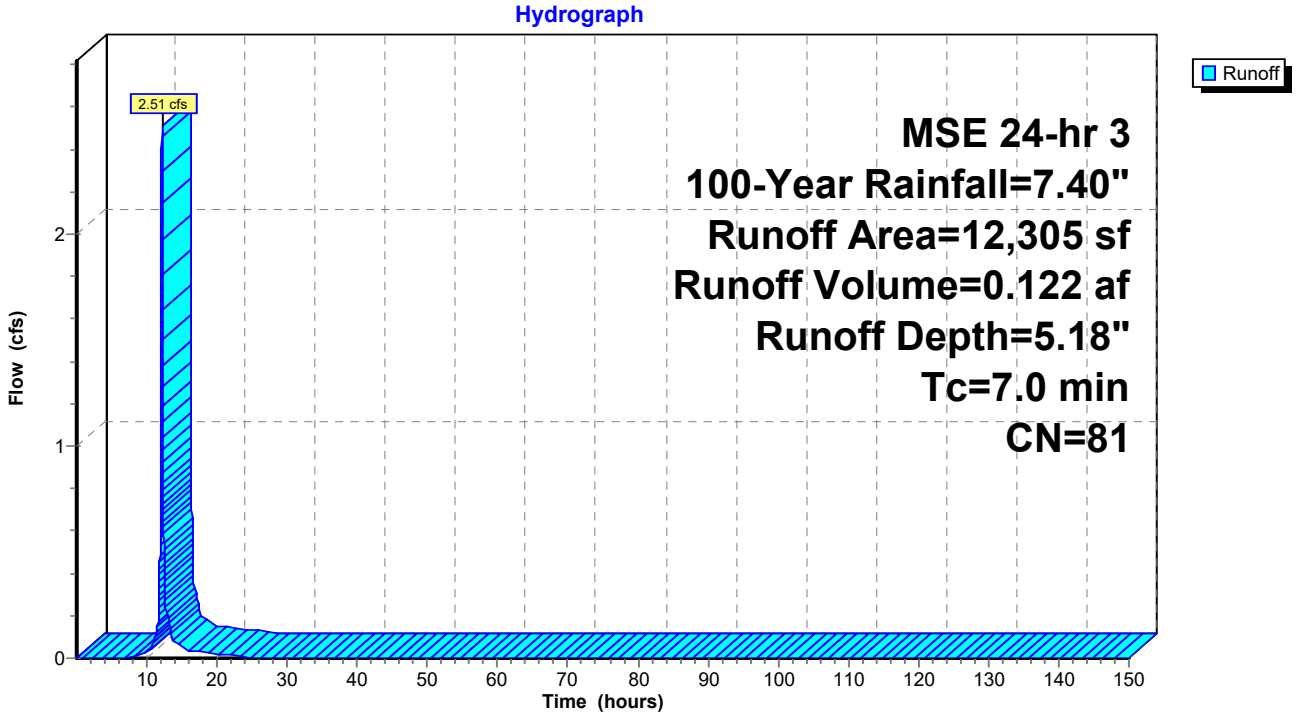

## Summary for Pond 1P: Filtration Basin

Inflow Area = 0.912 ac, 68.87% Impervious, Inflow Depth = 6.33" for 100-Year event
Inflow = 9.29 cfs @ 12.14 hrs, Volume= 0.481 af
Outflow = 8.40 cfs @ 12.17 hrs, Volume= 0.481 af, Atten= 10%, Lag= 1.8 min
Primary = 8.40 cfs @ 12.17 hrs, Volume= 0.481 af
Routed to Link 10L : Proposed On-Site Outfall

Routing by Dyn-Stor-Ind method, Time Span= 0.01-150.00 hrs, dt= 0.01 hrs
Peak Elev= 797.48' @ 12.17 hrs Surf.Area= 3,006 sf Storage= 4,663 cf

Plug-Flow detention time= 262.6 min calculated for 0.481 af (100% of inflow)
Center-of-Mass det. time= 262.4 min ( 1,029.3 - 766.8 )

| Volume | Invert | Avail.Storage | Storage Description |
|---|---|---|---|
| #1 | 793.00' | 1,090 cf | **Filtration Media (Irregular)** Listed below (Recalc) |
| #2 | 795.00' | 6,222 cf | **Pond (Irregular)** Listed below (Recalc) |
| | | 7,312 cf | Total Available Storage |

| Elevation (feet) | Surf.Area (sq-ft) | Perim. (feet) | Inc.Store (cubic-feet) | Cum.Store (cubic-feet) | Wet.Area (sq-ft) |
|---|---|---|---|---|---|
| 793.00 | 545 | 202.7 | 0 | 0 | 545 |
| 795.00 | 545 | 202.7 | 1,090 | 1,090 | 950 |

| Elevation (feet) | Surf.Area (sq-ft) | Perim. (feet) | Inc.Store (cubic-feet) | Cum.Store (cubic-feet) | Wet.Area (sq-ft) |
|---|---|---|---|---|---|
| 795.00 | 545 | 202.7 | 0 | 0 | 545 |
| 795.50 | 858 | 215.3 | 348 | 348 | 977 |
| 796.00 | 1,221 | 245.9 | 517 | 865 | 2,106 |
| 796.50 | 1,631 | 273.6 | 711 | 1,575 | 3,258 |
| 797.00 | 2,046 | 282.5 | 917 | 2,493 | 3,676 |
| 797.50 | 2,479 | 292.2 | 1,130 | 3,622 | 4,142 |
| 798.00 | 2,932 | 303.0 | 1,351 | 4,973 | 4,675 |
| 798.40 | 3,315 | 312.7 | 1,249 | 6,222 | 5,166 |

| Device | Routing | Invert | Outlet Devices |
|---|---|---|---|
| #1 | Primary | 793.00' | **18.0" Round Culvert**<br>L= 196.6' RCP, square edge headwall, Ke= 0.500<br>Inlet / Outlet Invert= 793.00' / 790.05' S= 0.0150 '/' Cc= 0.900<br>n= 0.012 Concrete pipe, finished, Flow Area= 1.77 sf |
| #2 | Primary | 796.72' | **4.0' long Sharp-Crested Rectangular Weir** 2 End Contraction(s) |
| #3 | Device 4 | 793.00' | **0.800 in/hr Exfiltration over Surface area** |
| #4 | Device 1 | 793.00' | **6.0" Round 6" DT** L= 100.0' Ke= 0.900<br>Inlet / Outlet Invert= 793.00' / 793.00' S= 0.0000 '/' Cc= 0.900<br>n= 0.010 PVC, smooth interior, Flow Area= 0.20 sf |

**Primary OutFlow** Max=8.39 cfs @ 12.17 hrs HW=797.48' TW=0.00' (Dynamic Tailwater)
- **1=Culvert** (Passes 0.06 cfs of 16.17 cfs potential flow)
  - **4=6" DT** (Passes 0.06 cfs of 1.23 cfs potential flow)
    - **3=Exfiltration** (Exfiltration Controls 0.06 cfs)
- **2=Sharp-Crested Rectangular Weir** (Weir Controls 8.34 cfs @ 2.85 fps)

## Pond 1P: Filtration Basin

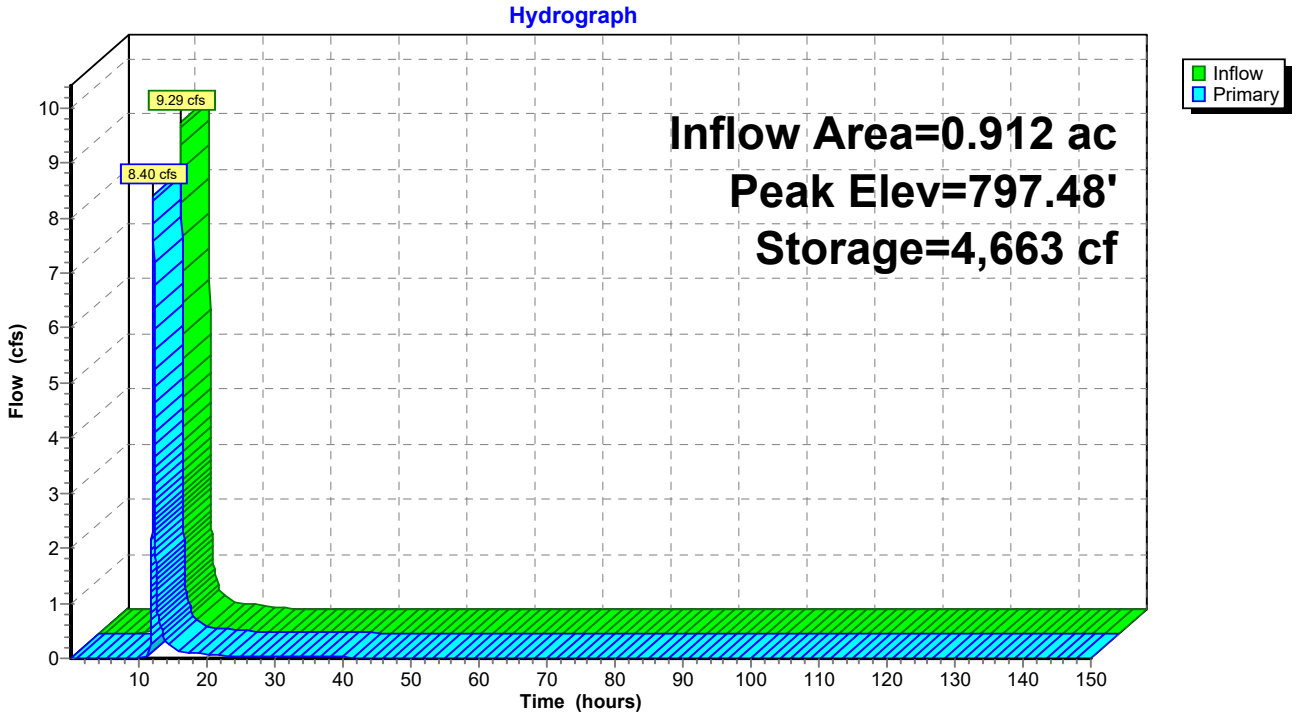

## Summary for Link 10L: Proposed On-Site Outfall

Inflow Area = 1.007 ac, 67.06% Impervious, Inflow Depth = 6.28" for 100-Year event
Inflow = 9.24 cfs @ 12.17 hrs, Volume= 0.527 af
Primary = 9.24 cfs @ 12.17 hrs, Volume= 0.527 af, Atten= 0%, Lag= 0.0 min
Routed to Link 12L : Total Proposed Outfall

Primary outflow = Inflow, Time Span= 0.01-150.00 hrs, dt= 0.01 hrs

## Link 10L: Proposed On-Site Outfall

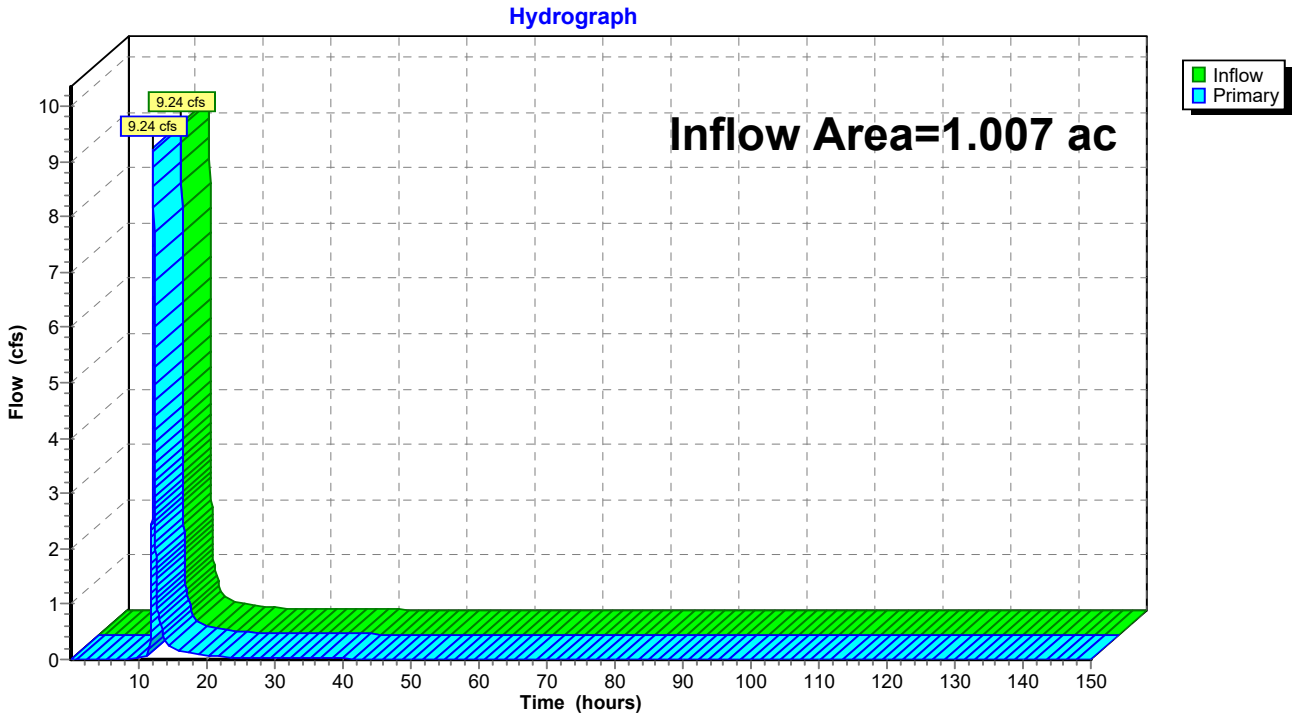

## Summary for Link 11L: Proposed Off-Site Outfall

Inflow Area = 0.282 ac, 28.26% Impervious, Inflow Depth = 5.18" for 100-Year event
Inflow = 2.51 cfs @ 12.14 hrs, Volume= 0.122 af
Primary = 2.51 cfs @ 12.14 hrs, Volume= 0.122 af, Atten= 0%, Lag= 0.0 min
Routed to Link 12L : Total Proposed Outfall

Primary outflow = Inflow, Time Span= 0.01-150.00 hrs, dt= 0.01 hrs

## Link 11L: Proposed Off-Site Outfall

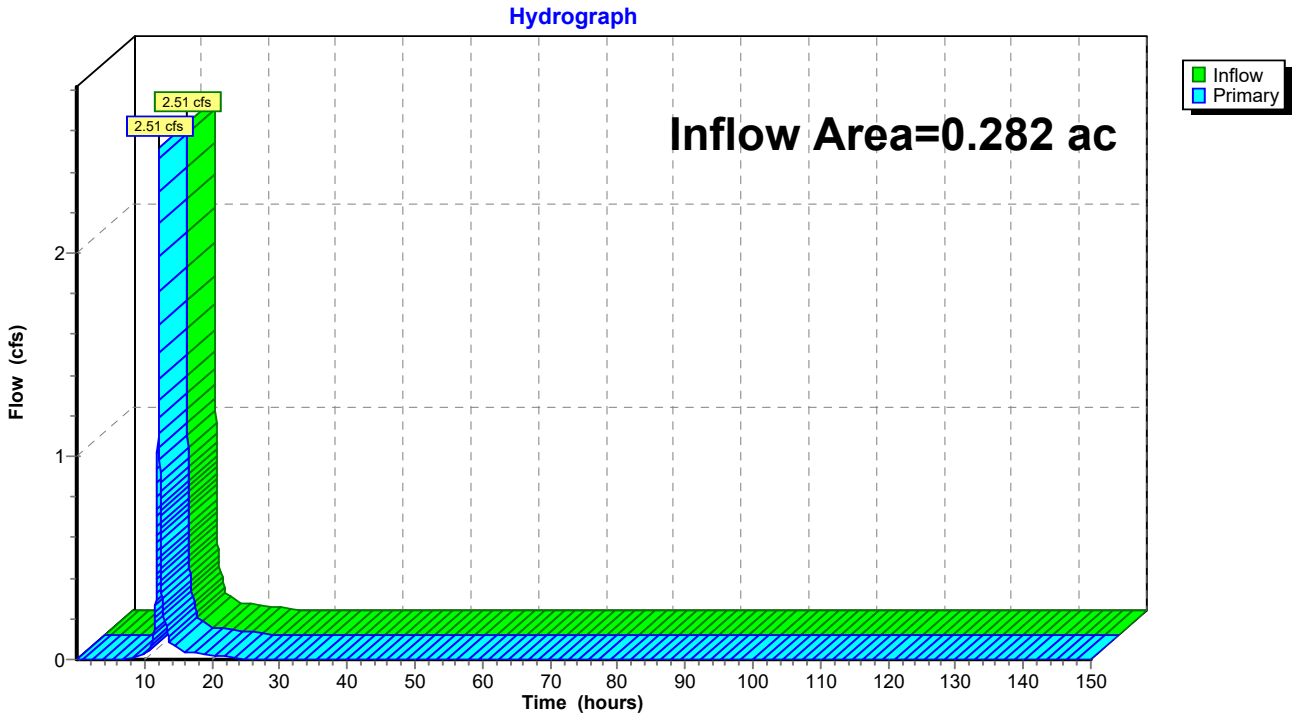

## Summary for Link 12L: Total Proposed Outfall

Inflow Area = 1.290 ac, 58.56% Impervious, Inflow Depth = 6.04" for 100-Year event
Inflow = 11.63 cfs @ 12.16 hrs, Volume= 0.649 af
Primary = 11.63 cfs @ 12.16 hrs, Volume= 0.649 af, Atten= 0%, Lag= 0.0 min

Primary outflow = Inflow, Time Span= 0.01-150.00 hrs, dt= 0.01 hrs

## Link 12L: Total Proposed Outfall

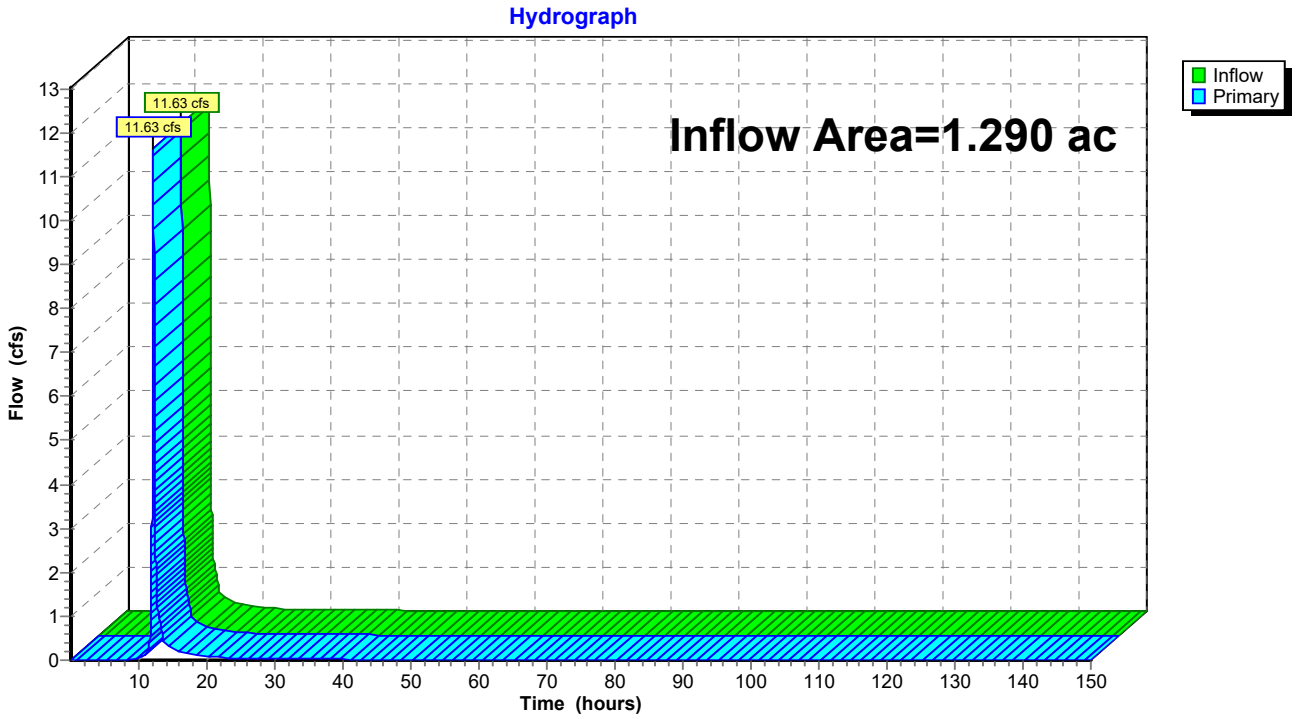

# Appendix 4. Pre-Development MIDS Model Analysis

## Project Information

| | |
|---|---|
| Calculator Version: | Version 4: July 2020 |
| Project Name: | Panera - Cottage Grove (Pre) |
| User Name / Company Name: | Kimley-Horn / CA Commercial Development |
| Date: | 01/26/2026 |
| Project Description: | Pre-development conditions |
| Construction Permit?: | Yes |

## Site Information

| | |
|---|---|
| Retention Requirement (inches): | 1.1 |
| Site's Zip Code: | 55016 |
| Annual Rainfall (inches): | 31.6 |
| Phosphorus EMC (mg/l): | 0.3 |
| TSS EMC (mg/l): | 54.5 |

**Total Site Area**

| Land Cover | A Soils (acres) | B Soils (acres) | C Soils (acres) | D Soils (acres) | Total (acres) |
|---|---|---|---|---|---|
| Forest/Open Space - Undisturbed, protected forest/open space or reforested land | | | | | 0 |
| Managed Turf - disturbed, graded for yards or other turf to be mowed/managed | | | 0.38 | | 0.38 |
| | | | | Impervious Area (acres) | 0.91 |
| | | | | Total Area (acres) | 1.29 |

**Site Areas Routed to BMPs**

| Land Cover | A Soils (acres) | B Soils (acres) | C Soils (acres) | D Soils (acres) | Total (acres) |
|---|---|---|---|---|---|
| Forest/Open Space - Undisturbed, protected forest/open space or reforested land | | | | | 0 |
| Managed Turf - disturbed, graded for yards or other turf to be mowed/managed | | | | | 0 |
| | | | | Impervious Area (acres) | |
| | | | | Total Area (acres) | 0 |

## Summary Information

**Performance Goal Requirement**

| | | |
|---|---|---|
| Performance goal volume retention requirement: | 3634 | ft3 |
| Volume removed by BMPs towards performance goal: | | $ft^3$ |
| **Percent volume removed towards performance goal** | | **%** |

**Annual Volume and Pollutant Load Reductions**

| | | |
|---|---|---|
| Post development annual runoff volume | 2.247 | acre-ft |
| Annual runoff volume removed by BMPs: | | acre-ft |
| **Percent annual runoff volume removed:** | | **%** |
| | | |
| Post development annual particulate P load: | 1.0085 | lbs |
| Annual particulate P removed by BMPs: | | lbs |
| Post development annual dissolved P load: | 0.825 | lbs |
| Annual dissolved P removed by BMPs: | 0 | lbs |
| Total P removed by BMPs | 0 | lbs |
| **Percent annual total phosphorus removed:** | | **%** |
| | | |
| Post development annual TSS load: | 333.1 | lbs |
| Annual TSS removed by BMPs: | | lbs |
| **Percent annual TSS removed:** | | **%** |

## BMP Summary

**Performance Goal Summary**

| BMP Name | BMP Volume Capacity (ft3) | Volume Recieved (ft3) | Volume Retained (ft3) | Volume Outflow (ft3) | Percent Retained (%) |
|---|---|---|---|---|---|

**Annual Volume Summary**

| BMP Name | Volume From Direct Watershed (acre-ft) | Volume From Upstream BMPs (acre-ft) | Volume Retained (acre-ft) | Volume outflow (acre-ft) | Percent Retained (%) |
|---|---|---|---|---|---|

**Particulate Phosphorus Summary**

| BMP Name | Load From Direct Watershed (lbs) | Load From Upstream BMPs (lbs) | Load Retained (lbs) | Outflow Load (lbs) | Percent Retained (%) |
|---|---|---|---|---|---|

**Dissolved Phosphorus Summary**

| BMP Name | Load From Direct Watershed (lbs) | Load From Upstream BMPs (lbs) | Load Retained (lbs) | Outflow Load (lbs) | Percent Retained (%) |
|---|---|---|---|---|---|

**Total Phosphorus Summary**

| BMP Name | Load From Direct Watershed (lbs) | Load From Upstream BMPs (lbs) | Load Retained (lbs) | Outflow Load (lbs) | Percent Retained (%) |
|---|---|---|---|---|---|

**TSS Summary**

| BMP Name | Load From Direct Watershed (lbs) | Load From Upstream BMPs (lbs) | Load Retained (lbs) | Outflow Load (lbs) | Percent Retained (%) |
|---|---|---|---|---|---|

## BMP Schematic

# Appendix 5. Post-Development MIDS Model Analysis

## Project Information

| | |
|---|---|
| Calculator Version: | Version 4: July 2020 |
| Project Name: | Panera - Cottage Grove (Post) |
| User Name / Company Name: | Kimley-Horn / CA Commercial Development |
| Date: | 01/26/2026 |
| Project Description: | Post-development conditions |
| Construction Permit?: | Yes |

## Site Information

| | |
|---|---|
| Retention Requirement (inches): | 1.1 |
| Site's Zip Code: | 55016 |
| Annual Rainfall (inches): | 31.6 |
| Phosphorus EMC (mg/l): | 0.3 |
| TSS EMC (mg/l): | 54.5 |

**Total Site Area**

| Land Cover | A Soils (acres) | B Soils (acres) | C Soils (acres) | D Soils (acres) | Total (acres) |
|---|---|---|---|---|---|
| Forest/Open Space - Undisturbed, protected forest/open space or reforested land | | | | | 0 |
| Managed Turf - disturbed, graded for yards or other turf to be mowed/managed | | | 0.53 | | 0.53 |
| | | | | Impervious Area (acres) | 0.76 |
| | | | | Total Area (acres) | 1.29 |

**Site Areas Routed to BMPs**

| Land Cover | A Soils (acres) | B Soils (acres) | C Soils (acres) | D Soils (acres) | Total (acres) |
|---|---|---|---|---|---|
| Forest/Open Space - Undisturbed, protected forest/open space or reforested land | | | | | 0 |
| Managed Turf - disturbed, graded for yards or other turf to be mowed/managed | | | 0.332 | | 0.332 |
| | | | | Impervious Area (acres) | 0.675 |
| | | | | Total Area (acres) | 1.007 |

## Summary Information

### Performance Goal Requirement

| | | |
|---|---|---|
| Performance goal volume retention requirement: | 3035 | ft3 |
| Volume removed by BMPs towards performance goal: | | $ft^3$ |
| **Percent volume removed towards performance goal** | | **%** |

### Annual Volume and Pollutant Load Reductions

| | | |
|---|---|---|
| Post development annual runoff volume | 1.9875 | acre-ft |
| Annual runoff volume removed by BMPs: | 0 | acre-ft |
| **Percent annual runoff volume removed:** | **0** | **%** |
| | | |
| Post development annual particulate P load: | 0.892 | lbs |
| Annual particulate P removed by BMPs: | 0.312 | lbs |
| Post development annual dissolved P load: | 0.73 | lbs |
| Annual dissolved P removed by BMPs: | 0.249 | lbs |
| Total P removed by BMPs | 0.561 | lbs |
| **Percent annual total phosphorus removed:** | **35** | **%** |
| | | |
| Post development annual TSS load: | 294.6 | lbs |
| Annual TSS removed by BMPs: | 188.2 | lbs |
| **Percent annual TSS removed:** | **64** | **%** |

## BMP Summary

### Performance Goal Summary

| BMP Name | BMP Volume Capacity (ft3) | Volume Recieved (ft3) | Volume Retained (ft3) | Volume Outflow (ft3) | Percent Retained (%) |
|---|---|---|---|---|---|
| 0 - Sand filter | 0 | 2695 | 0 | 2695 | 0 |

### Annual Volume Summary

| BMP Name | Volume From Direct Watershed (acre-ft) | Volume From Upstream BMPs (acre-ft) | Volume Retained (acre-ft) | Volume outflow (acre-ft) | Percent Retained (%) |
|---|---|---|---|---|---|
| 0 - Sand filter | 1.6929 | 0 | 0 | 1.6929 | 0 |

### Particulate Phosphorus Summary

| BMP Name | Load From Direct Watershed (lbs) | Load From Upstream BMPs (lbs) | Load Retained (lbs) | Outflow Load (lbs) | Percent Retained (%) |
|---|---|---|---|---|---|
| 0 - Sand filter | 0.7598 | 0 | 0.3115 | 0.4483 | 41 |

**Dissolved Phosphorus Summary**

| BMP Name | Load From Direct Watershed (lbs) | Load From Upstream BMPs (lbs) | Load Retained (lbs) | Outflow Load (lbs) | Percent Retained (%) |
|---|---|---|---|---|---|
| 0 - Sand filter | 0.6216 | 0 | 0.2486 | 0.373 | 40 |

**Total Phosphorus Summary**

| BMP Name | Load From Direct Watershed (lbs) | Load From Upstream BMPs (lbs) | Load Retained (lbs) | Outflow Load (lbs) | Percent Retained (%) |
|---|---|---|---|---|---|
| 0 - Sand filter | 1.3814 | 0 | 0.5601 | 0.8213 | 40 |

**TSS Summary**

| BMP Name | Load From Direct Watershed (lbs) | Load From Upstream BMPs (lbs) | Load Retained (lbs) | Outflow Load (lbs) | Percent Retained (%) |
|---|---|---|---|---|---|
| 0 - Sand filter | 250.95 | 0 | 188.21 | 62.74 | 75 |

## BMP Schematic

0 - Sand filter

# Appendix 6. Geotechnical Report (PENDING)

# Appendix 7. Grading and Drainage Plan and Drainage Details

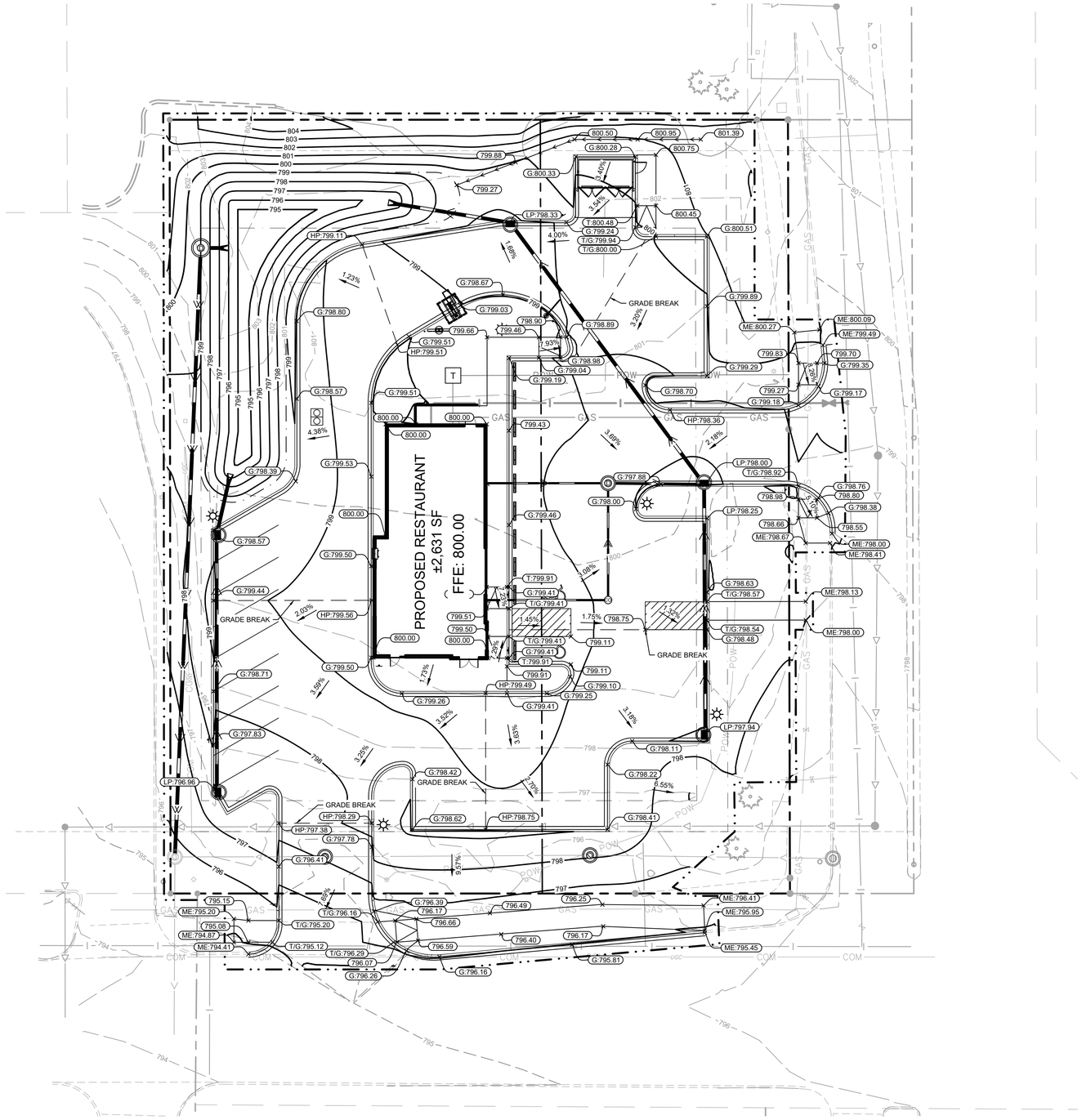


## LEGEND

| | |
|---|---|
| | PROPERTY LINE |
| 928 | EXISTING CONTOUR |
| 925 | PROPOSED CONTOUR |
| | PROPOSED RIDGE LINE |
| | PROPOSED SWALE |
| 100.00 | PROPOSED SPOT ELEVATION |
| HP:0.0 | PROPOSED HIGH POINT ELEVATION |
| LP:0.0 | PROPOSED LOW POINT ELEVATION |
| G:0.00 | PROPOSED GUTTER ELEVATION |
| T:0.00 | PROPOSED TOP OF CURB ELEVATION |
| T/G:0.0 | PROPOSED FLUSH PAVEMENT ELEVATION |
| ME:0.0 | MATCH EXISTING ELEVATION |
| EOF:0.0 | PROPOSED EMERGENCY OVERFLOW ELEVATION |
| TW:0.0<br>BW:0.0 | PROPOSED GRADE AT TOP/BOTTOM OF WALL |
| 0.0% | PROPOSED DRAINAGE DIRECTION |
| 0.00% | PROPOSED GRADE BETWEEN POINTS |

## GRADING PLAN NOTES

1. PERFORM GRADING WORK IN ACCORDANCE WITH APPLICABLE CITY SPECIFICATIONS AND BUILDING PERMIT REQUIREMENTS.
2. CONTACT STATE 811 CALL-BEFORE-YOU-DIG LOCATING SERVICE AT LEAST TWO WORKING DAYS PRIOR TO EXCAVATION FOR UNDERGROUND UTILITY LOCATIONS.
3. CONTRACTOR SHALL BE RESPONSIBLE FOR ALL HORIZONTAL AND VERTICAL CONTROL.
4. FIELD VERIFY THE LOCATIONS AND ELEVATIONS OF EXISTING UTILITIES AND TOPOGRAPHIC FEATURES PRIOR TO THE START OF LAND DISTURBING ACTIVITIES. NOTIFY THE PROJECT ENGINEER OF ANY DISCREPANCIES OR VARIATIONS IMPACTING THE PROPOSED DESIGN OF THE PROJECT.
5. IN PAVED AREAS, ROUGH GRADE TO SUBGRADE ELEVATION AND LEAVE THE SITE READY FOR SUB-BASE.
6. SUBGRADE EXCAVATION SHALL BE BACKFILLED IMMEDIATELY AFTER EXCAVATION TO HELP OFFSET ANY STABILITY PROBLEMS DUE TO WATER SEEPAGE OR STEEP SLOPES. WHEN PLACING NEW SURFACE MATERIAL ADJACENT TO EXISTING PAVEMENT, THE EXCAVATION SHALL BE BACKFILLED PROMPTLY TO AVOID UNDERMINING OF EXISTING PAVEMENT.
7. ELEVATIONS SHOWN REPRESENT FINISHED SURFACE GRADES. SPOT ELEVATIONS ALONG CURB & GUTTER REPRESENT THE FLOW LINE UNLESS OTHERWISE NOTED
8. EXCESS MATERIAL, BITUMINOUS SURFACING, CONCRETE ITEMS, ABANDONED UTILITY ITEMS, AND OTHER UNSTABLE MATERIALS SHALL BECOME THE PROPERTY OF THE CONTRACTOR AND SHALL BE DISPOSED OF OFF THE CONSTRUCTION SITE.
9. CONTRACTOR IS RESPONSIBLE FOR CONSTRUCTION OF PAVEMENTS AND CURB AND GUTTER WITH SMOOTH UNIFORM SLOPES THAT PROVIDE POSITIVE DRAINAGE TO COLLECTION POINTS. MAINTAIN A MINIMUM SLOPE OF 1.25% IN ASPHALT PAVEMENT AREAS AND A MINIMUM SLOPE OF 0.50% IN CONCRETE PAVEMENT AREAS.
10. MAINTAIN A MINIMUM SLOPE OF 0.50% ALONG CURB & GUTTER. REVIEW PAVEMENT GRADIENT AND CONSTRUCT "INFALL" CURB WHERE PAVEMENT DRAINS TOWARD THE GUTTER, AND "OUTFALL" CURB WHERE PAVEMENT DRAINS AWAY FROM THE GUTTER.
11. INSTALL A MINIMUM OF 4-INCHES OF AGGREGATE BASE MATERIAL UNDER PROPOSED CONCRETE CURB & GUTTER, SIDEWALKS, AND TRAILS UNLESS OTHERWISE DETAILED.
12. GRADING FOR SIDEWALKS AND ACCESSIBLE ROUTES, INCLUDING CROSSING DRIVEWAYS, SHALL CONFORM TO CURRENT STATE & NATIONAL ADA STANDARDS:

    ACCESSIBLE RAMP SLOPES SHALL NOT EXCEED 8.3% (1:12).
    SIDEWALK CROSS-SLOPES SHALL NOT EXCEED 2.0%.
    LONGITUDINAL SIDEWALK SLOPES SHALL NOT EXCEED 5.0%.
    ACCESSIBLE PARKING STALLS AND ACCESS AISLES SHALL NOT EXCEED 2.0% IN ANY DIRECTION. A MAXIMUM SLOPE OF 1.50% IS PREFERRED.

    SIDEWALK ACCESS TO EXTERNAL BUILDING DOORS AND GATES SHALL BE ADA COMPLIANT. NOTIFY ENGINEER IMMEDIATELY IF ADA CRITERIA CANNOT BE MET IN ANY LOCATION PRIOR TO PAVEMENT INSTALLATION. CHANGE ORDERS WILL NOT BE ACCEPTED FOR ADA COMPLIANCE ISSUES.
13. UPON COMPLETION OF LAND DISTURBING ACTIVITIES, RESTORE ADJACENT OFFSITE AREAS DISTURBED BY CONSTRUCTION TO MATCH OR EXCEED THE ORIGINAL CONDITION. LANDSCAPE AREAS SHALL BE RE-VEGETATED WITH A MINIMUM OF 4-INCHES OF TOPSOIL.
14. EXCAVATE DRAINAGE TRENCHES TO FOLLOW PROPOSED STORM SEWER ALIGNMENTS. REFER TO THE UTILITY PLANS FOR LAYOUT AND ELEVATIONS FOR PROPOSED SANITARY SEWER, WATER MAIN, AND OTHER BUILDING UTILITY SERVICE CONNECTIONS.

NORTH

GRAPHIC SCALE IN FEET
0 10 20 40

811 Know what's **below.** **Call** before you dig.

PRELIMINARY - NOT FOR CONSTRUCTION

| No. | REVISIONS | DATE | BY |
|---|---|---|---|


Kimley»Horn


© 2026 KIMLEY-HORN AND ASSOCIATES, INC.


11995 SINGLETREE LN, SUITE 225, EDEN PRAIRIE, MN 55344
PHONE: 612-315-1272
WWW.KIMLEY-HORN.COM


I HEREBY CERTIFY THAT THIS PLAN, SPECIFICATION OR REPORT WAS PREPARED BY ME OR UNDER MY DIRECT SUPERVISION AND THAT I AM A DULY LICENSED PROFESSIONAL ENGINEER UNDER THE LAWS OF THE STATE OF MINNESOTA.

BRIAN M. WURDEMAN, P.E.
DATE: 01/26/2026 LIC. NO. 53113 MN

KHA PROJECT 161369000
DATE 01/26/2026
SCALE AS SHOWN
DESIGNED BY MTL
DRAWN BY AKK
CHECKED BY BMW

# PANERA - COTTAGE GROVE
PREPARED FOR
CA COMMERCIAL
COTTAGE GROVE MN

# GRADING PLAN

SHEET NUMBER
C500


K:\TCW_LDEV\ca commercial\cottage grove, mn\3 Design\CAD\plansheets\C5-GRADING PLAN.dwg January 28, 2026 - 2:35pm

This document, together with the concepts and designs presented herein, as an instrument of service, is intended only for the specific purpose and client for which it was prepared. Reuse of and improper reliance on this document without written authorization and adaptation by Kimley-Horn and Associates, Inc. shall be without liability to Kimley-Horn and Associates, Inc.

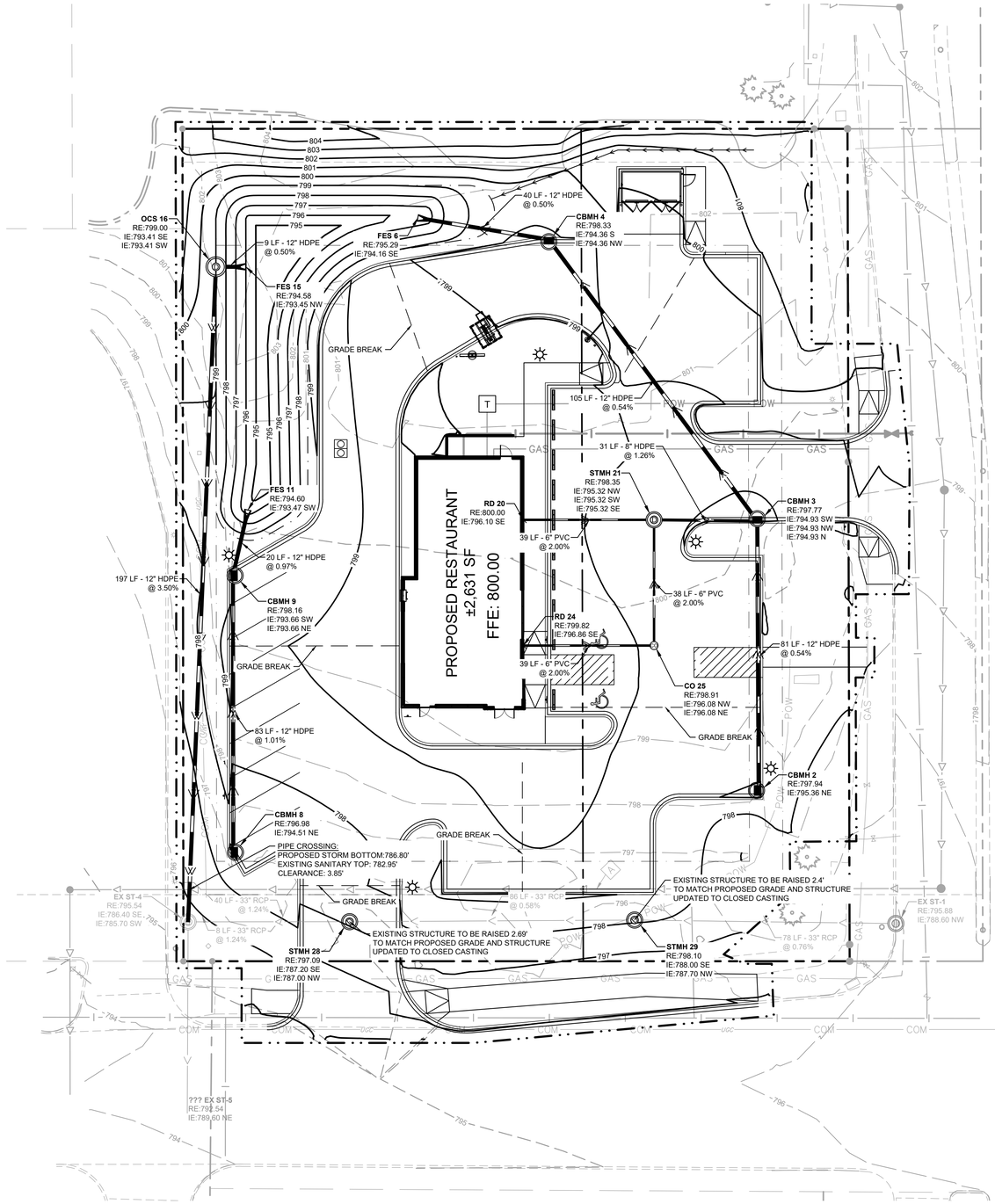


## LEGEND

- PROPERTY LINE
- EXISTING CONTOUR
- PROPOSED CONTOUR
- PROPOSED RIDGE LINE
- PROPOSED SWALE
- PROPOSED STORM MANHOLE (SOLID CASTING)
- PROPOSED STORM MANHOLE (ROUND INLET CASTING)
- PROPOSED STORM MANHOLE/ CATCH BASIN (CURB INLET CASTING)
- PROPOSED STORM SEWER CLENOUT
- PROPOSED FLARED END SECTION
- PROPOSED RIPRAP
- PROPOSED STORM SEWER

## FILTRATION BMP NOTES

1. TO THE EXTENT PRACTICABLE, LIMIT USE OF HEAVY CONSTRUCTION EQUIPMENT WITHIN THE BOUNDARIES OF THE PROPOSED INFILTRATION BMP. UTILIZE AN EXCAVATOR WITH A TOOTHED BUCKET TO AVOID COMPACTING OR SMEARING OF SOILS.
2. AFTER INITIAL EXCAVATION AND ROUGH GRADING, PROVIDE A MINIMUM OF TWO (2) DOUBLE RING INFILTROMETER TESTS WITHIN THE INFILTRATION AREA AT THE ELEVATION OF THE BASIN BOTTOM. PROVIDE THE RESULTS TO THE ENGINEER OF RECORD FOR REVIEW AND APPROVAL PRIOR TO COMPLETING INSTALLATION OF THE BASIN OR UNDERGROUND SYSTEM.
3. IF CLAY SOILS ARE ENCOUNTERED, OVER-EXCAVATE AS NECESSARY TO REACH NATIVE SANDY/SILTY SOIL. BACKFILL THE ADDITIONAL EXCAVATION WITH SUITABLE ENGINEERED FILL MATERIAL.
4. IF NATIVE SUBGRADE SOILS AT THE BOTTOM OF THE PROPOSED INFILTRATION AREA ARE DETERMINED TO NOT BE CONDUCIVE TO THE DESIGN INFILTRATION REQUIREMENTS, REMOVE AND REPLACE THE POORLY INFILTRATION SOILS TO A DEPTH WHERE THE EXISTING NATIVE SUBGRADE SOILS MEET OR EXCEED THE DESIGN INFILTRATION REQUIREMENTS AS REVIEWED BY THE ENGINEER.
5. FINAL EXCAVATION OF THE INFILTRATION AREA AND INSTALLATION OF ANY ENGINEERED SOIL MUST OCCUR IN DRY CONDITIONS TO PREVENT SMEARING AND COMPACTION.
6. REMOVE ANY EXCESS SOILS THAT ENTER THE INFILTRATION BASIN PRIOR TO FINAL STABILIZATION.
7. UPON COMPLETION OF THE INFILTRATION/FILTRATION SYSTEM INSTALLATION AND FINAL STABILIZATION OF THE TRIBUTARY AREA, PROVIDE DOCUMENTATION THAT THE BMP DRAINS DOWN WITHIN 48 HOURS.

## STORM SEWER NOTES

1. INSTALL STORM SEWER IN ACCORDANCE WITH APPLICABLE CITY OR STATE SPECIFICATIONS, STATE PLUMBING CODE, AND BUILDING PERMIT REQUIREMENTS.
2. CONTACT STATE 811 CALL-BEFORE-YOU-DIG LOCATING SERVICE AT LEAST TWO WORKING DAYS PRIOR TO EXCAVATION FOR UNDERGROUND UTILITY LOCATIONS.
3. STORM SEWER PIPE SHALL BE AS FOLLOWS:
   RCP: ASTM C-76
   HDPE: ASTM F-714, F-894
   PVC: ASTM D-2729
   PVC SCH40: ASTM D-1785, D-2665, F-794
   DRAIN TILE SHALL BE AS FOLLOWS:
   PE: ASTM F-6667
   PVC: ASTM D-2729
   FITTINGS SHALL BE AS FOLLOWS:
   RCP: ASTM C-76, JOINTS PER ASTM C-361, C-990, AND C-443
   HDPE: ASTM D-3212
   PVC: ASTM D-2729, JOINTS PER ASTM D-3212
   PVC SCH40: ASTM D-2665, F-794, F-1866
4. CONTRACTOR IS RESPONSIBLE FOR ALL HORIZONTAL AND VERTICAL CONTROL.
5. FIELD VERIFY THE LOCATIONS AND ELEVATIONS OF EXISTING UTILITIES AND TOPOGRAPHIC FEATURES PRIOR TO THE START OF LAND DISTURBING ACTIVITIES. NOTIFY THE PROJECT ENGINEER OF ANY DISCREPANCIES OR VARIATIONS IMPACTING THE PROPOSED DESIGN OF THE PROJECT.
6. EXCAVATE DRAINAGE TRENCHES TO FOLLOW PROPOSED STORM SEWER ALIGNMENTS. REFER TO THE UTILITY PLANS FOR LAYOUT AND ELEVATIONS FOR PROPOSED SANITARY SEWER, WATER MAIN, AND OTHER BUILDING UTILITY SERVICE CONNECTIONS. REFER TO THE GRADING PLAN FOR DETAILED SURFACE ELEVATIONS.
7. EXCESS MATERIAL, BITUMINOUS SURFACING, CONCRETE ITEMS, ABANDONED UTILITY ITEMS, AND OTHER UNSTABLE MATERIALS SHALL BECOME THE PROPERTY OF THE CONTRACTOR AND SHALL BE DISPOSED OF OFF THE CONSTRUCTION SITE.
8. COORDINATE WITH THE PLUMBING PLANS FOR THE LOCATION, SIZE AND ELEVATION OF THE PROPOSED UNDERGROUND ROOF DRAIN CONNECTIONS.
9. WHERE STORM SEWER ROOF DRAINS HAVE LESS THAN 4-FEET OF COVER IN PAVED AREAS OR 3-FEET OF COVER IN LANDSCAPE AREAS, PROVIDE 3-INCH THICK INSULATION A MINIMUM OF 5-FEET IN WIDTH, CENTERED ON THE PIPE.
10. ALL STORM SEWER PIPE JOINTS SHALL BE WATER-TIGHT CONNECTIONS.
11. ALL STORM SEWER PIPE CONNECTIONS TO MANHOLES SHALL BE GASKETED AND WATER TIGHT. BOOTED COUPLERS AT THE STRUCTURE OR A WATER STOP WITH NON-SHRINK GROUT MAY BE USED IN ACCORDANCE WITH LOCAL CODES.
12. CONTRACTOR SHALL AIR TEST ALL STORM SEWER PIPE IN ACCORDANCE WITH LOCAL CODE REQUIREMENTS.

NORTH

GRAPHIC SCALE IN FEET
0 10 20 40

Know what's **below.**
**Call** before you dig.

PRELIMINARY - NOT FOR CONSTRUCTION

| No. | REVISIONS | DATE | BY |
|---|---|---|---|

Kimley»Horn
© 2026 KIMLEY-HORN AND ASSOCIATES, INC.
11995 SINGLETREE LN, SUITE 225, EDEN PRAIRIE, MN 55344
PHONE: 612-315-1272
WWW.KIMLEY-HORN.COM

I HEREBY CERTIFY THAT THIS PLAN, SPECIFICATION OR REPORT WAS PREPARED BY ME OR UNDER MY DIRECT SUPERVISION AND THAT I AM A DULY LICENSED PROFESSIONAL ENGINEER UNDER THE LAWS OF THE STATE OF MINNESOTA.

BRIAN M. WURDEMAN, P.E.
MN
LIC. NO. 53113
DATE: 01/26/2026

| | |
|---|---|
| KHA PROJECT | 161369000 |
| DATE | 01/26/2026 |
| SCALE | AS SHOWN |
| DESIGNED BY | ARF |
| DRAWN BY | AKK |
| CHECKED BY | MTL |

# STORM SEWER PLAN

**PANERA - COTTAGE GROVE**
PREPARED FOR
**CA COMMERCIAL**
COTTAGE GROVE MN

SHEET NUMBER
**C501**

K:\TCW_LDEV\ca commercial\cottage grove, mn\3 Design\CAD\plansheets\C5-STORM PLAN.dwg January 28, 2026 - 2:35pm
This document, together with the concepts and designs presented herein, as an instrument of service, is intended only for the specific purpose and client for which it was prepared. Reuse of and improper reliance on this document without written authorization and adaptation by Kimley-Horn and Associates, Inc. shall be without liability to Kimley-Horn and Associates, Inc.

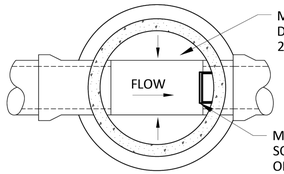


MORTAR BOTTOM OF MANHOLE TO 1/2 DIAMETER AT PIPE AND SLOPE MORTAR 2" TOWARD INVERT.

MANHOLE STEPS SHALL BE PLACED SO THAT OFFSET VERTICAL PORTION OF CONE IS FACING DOWNSTREAM.

PLAN

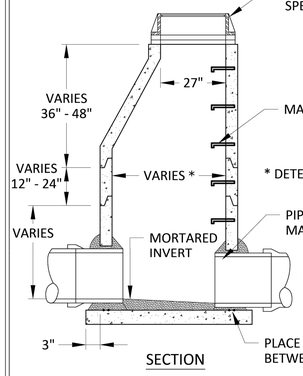


CASTING AND ADJUSTMENT RINGS AS SPECIFIED. PER DETAIL PLATE STR-23.

MANHOLE STEPS 16" MAX ON CENTER.

* DETERMINED BY PIPE SIZE

PIPE SHALL BE CUT TO BE 2"-4" INSIDE MANHOLE WALL.

DOGHOUSES SHALL BE MORTARED BOTH INSIDE AND OUTSIDE OF MANHOLE. WATERSTOP GASKET REQUIRED FOR POLYPROPYLENE PIPE.

PLACE 2 BEADS OF RAMNEK OR EQUAL, BETWEEN BOTTOM SLAB AND BARREL SECTION

SECTION

Cottage Grove — Where Pride and Prosperity Meet

| STANDARD DETAILS | JANUARY 2025 |
|---|---|
| STORM SEWER MANHOLE | PLATE NO. STO-1 |
| COTTAGE GROVE, MINNESOTA | |

48_STO1.DWG

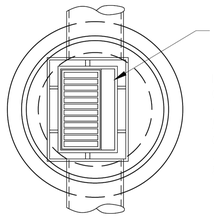

24"X36" SLAB OPENING FOR CASTING SPECIFIED

DIMENSION FROM BACK OF CURB TO CENTER OF PIPE:
4' DIA. MH - 9" IN FROM BACK OF CURB
5' DIA. MH - 3" IN FROM BACK OF CURB
6' DIA. MH - 3" BEHIND BACK OF CURB
7' DIA. MH - 9" BEHIND BACK OF CURB
8' DIA. MH - 15" BEHIND BACK OF CURB

PLAN

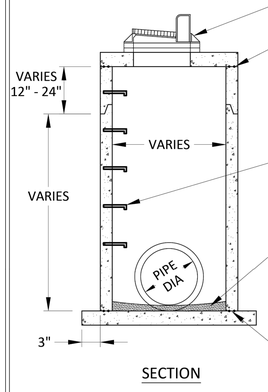


CASTING AND ADJUSTMENT RINGS AS SPECIFIED. PER DETAIL PLATE STR-23.

TOP OF BARREL SECTION BELOW TOP SLAB TO HAVE FLAT TOP EDGE SEALED WITH 2 BEADS OF RAMNEK OR EQUAL.

MANHOLE STEPS 16" MAX ON CENTER.

MORTAR BOTTOM
DOGHOUSES SHALL BE MORTARED BOTH INSIDE AND OUTSIDE OF MANHOLE. WATERSTOP GASKET REQUIRED FOR POLYPROPYLENE PIPE.

PLACE 2 BEADS OF RAMNEK OR EQUAL BETWEEN BOTTOM SLAB AND BARREL SECTION.

SECTION

Cottage Grove — Where Pride and Prosperity Meet

| STANDARD DETAILS | JANUARY 2025 |
|---|---|
| CATCH BASIN MANHOLE | PLATE NO. STO-5 |
| COTTAGE GROVE, MINNESOTA | |

48_STO5.DWG

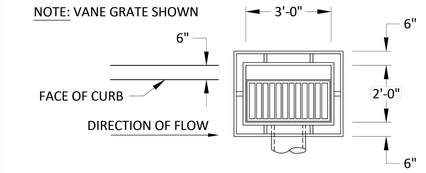


PLAN

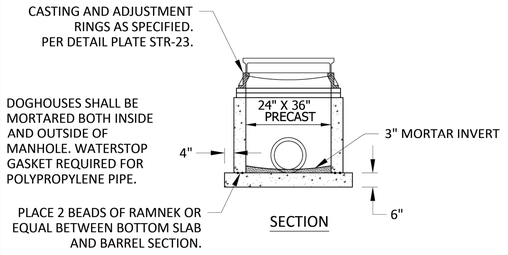


DOGHOUSES SHALL BE MORTARED BOTH INSIDE AND OUTSIDE OF MANHOLE. WATERSTOP GASKET REQUIRED FOR POLYPROPYLENE PIPE.

PLACE 2 BEADS OF RAMNEK OR EQUAL BETWEEN BOTTOM SLAB AND BARREL SECTION.

SECTION

Cottage Grove — Where Pride and Prosperity Meet

| STANDARD DETAILS | JANUARY 2025 |
|---|---|
| CATCH BASIN | PLATE NO. STO-7 |
| COTTAGE GROVE, MINNESOTA | |

48_STO7.DWG

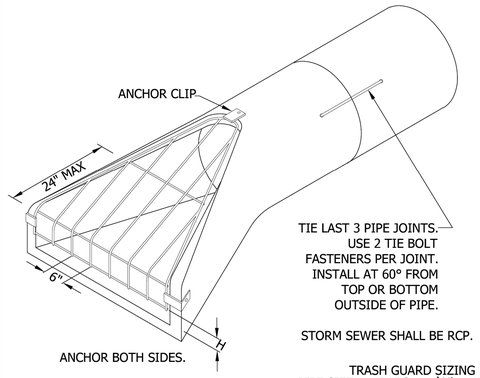


ISOMETRIC

TIE LAST 3 PIPE JOINTS. USE 2 TIE BOLT FASTENERS PER JOINT. INSTALL AT 60° FROM TOP OR BOTTOM OUTSIDE OF PIPE.

STORM SEWER SHALL BE RCP.

TRASH GUARD SIZING

| PIPE SIZE | BARS | 'H' | BOLTS |
|---|---|---|---|
| 12"-18" | 3/4"Ø | 3"-4" | 5/8" |
| 21"-42" | 1"Ø | 4"-6" | 3/4" |
| 48"-72" | 1 1/4"Ø | 6"-8" | 1" |

SEE CITY PLATE NO. STO-12 AND STO-13 FOR RIPRAP PLACEMENT.

Cottage Grove — Where Pride and Prosperity Meet

| STANDARD DETAILS | JANUARY 2025 |
|---|---|
| FLARED END SECTION AND TRASH GAURD | PLATE NO. STO-11 |
| COTTAGE GROVE, MINNESOTA | |

48_STO11.DWG

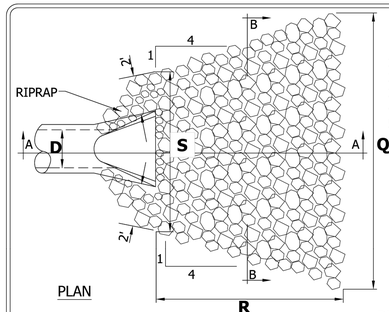


PLAN

(15' MIN.)

**RIPRAP AREA SIZES**

| D | Q | R | S |
|---|---|---|---|
| 12" | 11' | 15' | 7' |
| 24" | 15' | 15' | 9' |
| 36" | 19' | 15' | 11' |
| 48" | 20' | 16' | 12' |
| 54" | 25' | 22' | 13' |

**RIPRAP REQUIREMENTS**

| D | CY | CLASS | DEPTH |
|---|---|---|---|
| 12" TO 24" | 15 TO 20 | CL.3 | 3' |
| 27" TO 33" | 20 TO 25 | CL.3 | 3' |
| 36" TO 48" | 25 TO 38 | CL.3 | 3' |
| 54" AND UP | 72 AND UP | CL.4 | 4' |

(ONE CUBIC YARD IS APPROX. 2,800 LBS.)

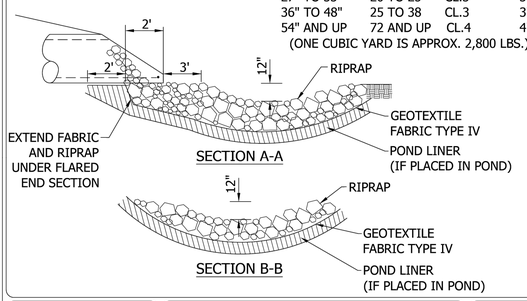


Cottage Grove — Where Pride and Prosperity Meet

| STANDARD DETAILS | JANUARY 2025 |
|---|---|
| RIPRAP AT FLARED END SECTION | PLATE NO. STO-12 |
| COTTAGE GROVE, MINNESOTA | |

48_STO12.DWG

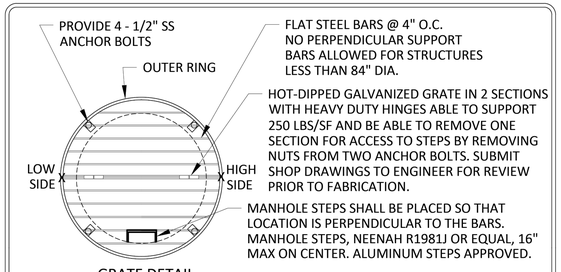


FLAT STEEL BARS @ 4" O.C. NO PERPENDICULAR SUPPORT BARS ALLOWED FOR STRUCTURES LESS THAN 84" DIA.

HOT-DIPPED GALVANIZED GRATE IN 2 SECTIONS WITH HEAVY DUTY HINGES ABLE TO SUPPORT 250 LBS/SF AND BE ABLE TO REMOVE ONE SECTION FOR ACCESS TO STEPS BY REMOVING NUTS FROM TWO ANCHOR BOLTS. SUBMIT SHOP DRAWINGS TO ENGINEER FOR REVIEW PRIOR TO FABRICATION.

MANHOLE STEPS SHALL BE PLACED SO THAT LOCATION IS PERPENDICULAR TO THE BARS. MANHOLE STEPS, NEENAH R1981J OR EQUAL, 16" MAX ON CENTER. ALUMINUM STEPS APPROVED.

GRATE DETAIL

| MANHOLE DIAMETER | SKIMMER OPENING |
|---|---|
| 4' | 3'x1.5' |
| 5' | 4.5'x1.5' |
| 6' | 6'x1.5' |

| DIAMETER | * D (TOP OF STRUCTURE SLOPE) |
|---|---|
| 48" DIA | 9" OR 18" |
| >48" DIA | 12" OR 24" |

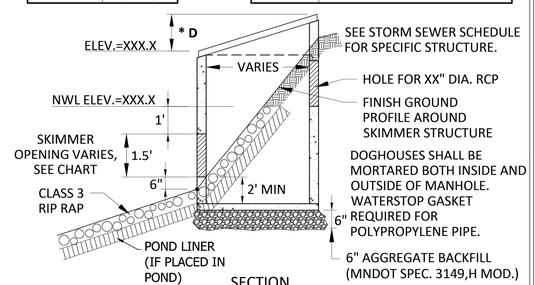


SEE STORM SEWER SCHEDULE FOR SPECIFIC STRUCTURE.

HOLE FOR XX" DIA. RCP

FINISH GROUND PROFILE AROUND SKIMMER STRUCTURE

DOGHOUSES SHALL BE MORTARED BOTH INSIDE AND OUTSIDE OF MANHOLE. WATERSTOP GASKET REQUIRED FOR POLYPROPYLENE PIPE.

6" AGGREGATE BACKFILL (MNDOT SPEC. 3149,H MOD.)

SECTION

Cottage Grove — Where Pride and Prosperity Meet

| STANDARD DETAILS | JANUARY 2025 |
|---|---|
| STANDARD SKIMMER STRUCTURE | PLATE NO. STO-16 |
| COTTAGE GROVE, MINNESOTA | |

48_STO16.DWG

PRELIMINARY - NOT FOR CONSTRUCTION

| No. | REVISIONS | DATE | BY |
|---|---|---|---|

Kimley»Horn

© 2026 KIMLEY-HORN AND ASSOCIATES, INC.

11995 SINGLETREE LN. SUITE 225, EDEN PRAIRIE, MN 55344
PHONE: 612-315-1272
WWW.KIMLEY-HORN.COM

I HEREBY CERTIFY THAT THIS PLAN, SPECIFICATION OR REPORT WAS PREPARED BY ME OR UNDER MY DIRECT SUPERVISION AND THAT I AM A DULY LICENSED PROFESSIONAL ENGINEER UNDER THE LAWS OF THE STATE OF MINNESOTA.

BRIAN M. WURDEMAN, P.E. — MN LIC. NO. 53113 — DATE: 01/28/2026

KHA PROJECT 161369000
DATE 01/28/2026
SCALE AS SHOWN
DESIGNED BY MTL
DRAWN BY AKK
CHECKED BY BMW

# GRADING DETAILS

**PANERA - COTTAGE GROVE**
PREPARED FOR
**CA COMMERCIAL**
COTTAGE GROVE MN

SHEET NUMBER
**C502**

K:\TCW_LDEV\ca commercial\cottage grove, mn\3 Design\CAD\plansheets\C5-GRADING DETAILS.dwg January 28, 2026 - 2:35pm
This document, together with the concepts and designs presented herein, as an instrument of service, is intended only for the specific purpose and client for which it was prepared. Reuse of and improper reliance on this document without written authorization and adaptation by Kimley-Horn and Associates, Inc. shall be without liability to Kimley-Horn and Associates, Inc.

# City Council Action Request

# 11.B.

**Meeting Date** 3/4/2026

**Department** Community Development

**Agenda Category** Action Item

**Title** New Life Church (11245 Point Douglas Drive South) – Site Plan Review

**Staff Recommendation** 1) Adopt Resolution 2026-035 approving the Site Plan Review for a 5,814 square foot building addition to the existing New Life Church building located at 11245 Point Douglas Drive South. 2) Approve the Stormwater Management Facilities Agreement with New Life Community Church.

**Budget Implication** N/A

**Attachments**

| | |
|---|---|
| 1. | New Life Church CC Memo |
| 2. | New Life Church Resolution 2026-035 |
| 3. | New Life Church Project Narrative |
| 4. | New Life Church Civil Plan Set |
| 5. | New Life Church Site Survey |
| 6. | New Life Church Septic Design |
| 7. | New Life Church Septic Approval |
| 8. | New Life Church Wetland Letter |
| 9. | New Life Church Stormwater Management Report |
| 10. | New Life Church MnDOT Letter |
| 11. | New Life Church Setback Sheet |
| 12. | New Life Church Letter of Concurrence |
| 13. | New Life Church Lighting Spec Sheet |
| 14. | New Life Church Engineering Review Memo 2026-02-03 |
| 15. | New Life Church Stormwater Management Facilities Agreement |

TO: Honorable Mayor and City Council
Jennifer Levitt, City Administrator

FROM: Kelly Becker, Associate Planner

DATE: February 24, 2026

RE: New Life Church (11245 Point Douglas Drive South) – Site Plan Review

---

## Proposal

Station 19 Architects (Applicant), on behalf of New Life Church, has submitted a Site Plan Review application to construct a 5,814 square foot building addition to the existing church building located at 11245 Point Douglas Drive South. The addition will consist of lobby space, restrooms, and five new classrooms for youth religious education. The primary days of operation will remain as Sundays and Wednesdays.

**Project Location**

***Review Schedule***
Application Received: January 26, 2026
Application Accepted: January 28, 2026
Planning Commission Meeting: February 23, 2026
City Council Meeting: March 4, 2026
60-Day Review Deadline: March 29, 2026

## Background

New Life Community Church received a Conditional Use Permit approval (Resolution No. 81-139) in 1981 for construction of the church and gravel parking lot on the property. Later in 1990, the Church received additional Conditional Use Permit approval (Resolution No. 90-89) for a building addition and classroom use. The addition included a 36-foot by 56-foot Gelco building attached to the main assembly hall of the church with an enclosed breezeway. That addition was constructed as approved, and the Church has been operating with classroom space since then. This proposal would allow additional classroom space to be used primarily on Sundays and Wednesdays.

## Planning Considerations

### *Zoning and Comprehensive Plan*

The parcel is approximately 10.13 acres and is zoned R-2, Residential Estate. Places of worship/religious institutions and private education facilities are permitted with a Conditional Use Permit in the Residential Estate zoning district. The parcel already has existing Conditional Use Permit approvals for both uses; therefore, additional approvals for the current and proposed use are not required. The City's 2040 Comprehensive Plan guides this parcel as public/semi-public given the religious institution use; the proposed expansion aligns with the City's future land use guidance.

**Zoning Map**

### *Mississippi River Corridor Critical Area (MRCCA) Overlay District*

The subject property is located within the Mississippi River Corridor Critical Area (MRCCA) District, specifically within the Separated from River (SR) Overlay District. The MRCCA ordinance is intended to protect existing bluffs, islands, floodplains, and wetlands and to be enforced by local jurisdictions. The Separated from River Overlay District is characterized by its physical and visual distance from the Mississippi River. The district includes land separated

from the river by distance, topography, development, or a transportation corridor. The land in this district is not readily visible from the Mississippi River. The property does not contain any wetlands or bluff, and the proposal meets the criteria for the requirements in the SR Overlay District.

***Project Site Plan***

The proposed building addition will be located on the east side of the existing dome-shaped structure and will connect to the main worship hall. The addition will provide a new main entry and lobby space in the building, as well as five new classrooms and new restrooms, with a total area of 5,814 square feet. The permitted maximum structure height in the R-2, Residential Estate Zoning District, is 35 feet, and the peak of the existing dome is 26 feet. The new addition will be approximately 17 feet. To accommodate the new entry to the building, the project will also involve removing and replacing the bituminous circular driveway approach and concrete walkways at the front of the building. Grading and tree removal will occur onsite for replacement of the existing septic system and new onsite stormwater treatment practices.

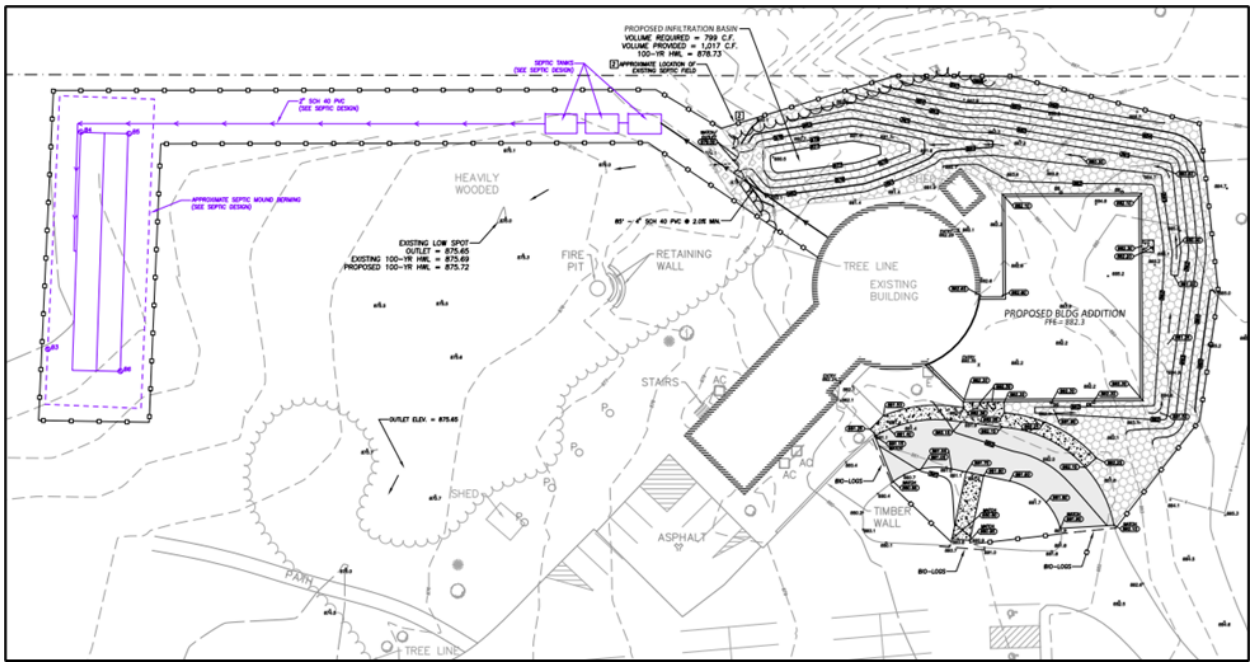


**Proposed Improvements**

***Setbacks***

The setbacks in the R-2, Residential Estate District, are listed below. When the church received the Conditional Use Permit for the building addition in 1990, a condition was added that no building shall be located within 50 feet of the any lot line, which is more restrictive than current code standards. The proposed addition will meet all setbacks in the code and in the previous conditions of approval.

| Applicable Building Setback | Required | Proposed |
|---|---|---|
| Side yard (north) | 25’ | 50’ |
| Side yard (south) | 25’ | 197’ |
| Front yard | 30’ | 148’ |
| Rear yard | 50’ | >750’ |

### *Access*

The property currently utilizes a shared driveway entrance with the property to the south branching off US 61. The Minnesota Department of Transportation (MnDOT) reviewed the existing access and proposed expansion. MnDOT included a comment in their review response indicating that at-grade intersections along US 61 are being phased out and converted to J-turns as this corridor approaches capacity for traditional intersections. In the future, upon advanced notice, the median at this location may be closed, allowing only right-in/right-out access. Left turns would then be made using a median U-turn. No changes to the access are being proposed or required at this time, and MnDOT is not requesting any additional right of way.

### *Architecture*

Title 11-3-11 requires that nonresidential or mixed-use buildings in a residential zoning district must use at least three different Class 1 materials and be composed of at least 65 percent Class 1 or 2 materials and not more than 10 percent of Class 4 materials. The Applicant has proposed a combination of brick, manufactured stone, glass (Class 1 materials) and stucco (Class 2), totaling 67 percent of the new addition. The remainder of the addition will be composed of Class 3 materials, including metal flashing and engineered wood siding. No Class 4 materials are proposed. Final rooftop mechanical location and colors of the exterior materials have not yet been selected but shall be reviewed and approved by City staff prior to the issuance of a building permit.

**Proposed Addition Rendering**

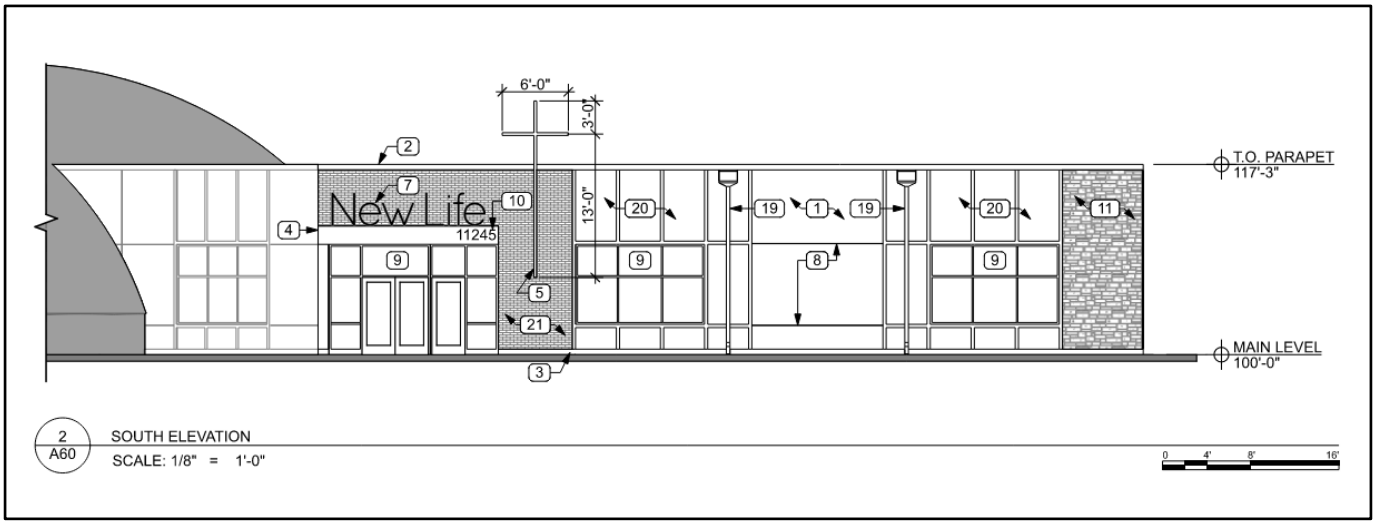


**Proposed Entry of Addition**

***Parking***

The existing parking lot was a gravel surface until 2023, when the church received a permit to pave the lot in its existing approved footprint. Title 11-3-4 requires places of worship to have one parking space for every four seats, based on the design capacity of the main assembly hall. Submitted plans indicate that the main assembly hall capacity is 299 persons, which would require 75 parking spaces. There are currently 74 spaces onsite, including 3 handicap accessible parking spaces; therefore, the site currently lacks one required parking space.

Title 11-3-4 also requires schools to have 1 space for each classroom, plus 1 additional space for each 100-student capacity. With the five new classrooms and six existing classrooms, there will be 11 classrooms in total in the building, requiring 11 parking spaces. The Applicant has indicated that the student capacity will be 184, which requires 2 additional parking spaces. Based on the school use and the current deficit of one parking space for the worship hall parking calculation, 14 additional parking spaces are required.

The Applicant has indicated that the 14 additional parking spaces would be excessive to meet their current needs. Title 11-3-4 permits the City to consider a proof of parking plan when a business can demonstrate a proposed use will not require the minimum number of spaces as otherwise required. When parking is reduced, the City may require that area to be reserved in open space for future parking needs. Therefore, the Applicant has shown 14 proof of parking spaces reserved on the site plan should staff verify the need arises for additional parking onsite in the future.

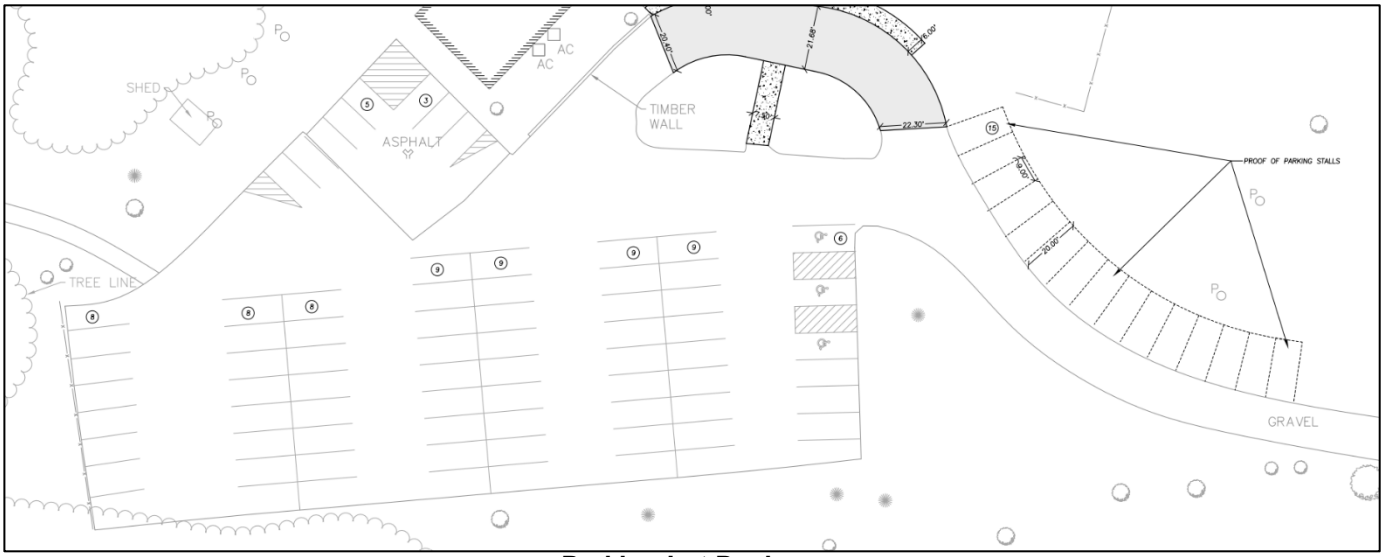


**Parking Lot Design**

***Landscaping and Tree Mitigation***

Title 11-3-12 requires the sides of a building that face a public street be landscaped for a length equal to one-half of the building dimension, with the landscaped region having an average depth of four feet. The Applicant has proposed a combination of sod, mulch, and shrubs to landscape the addition facing the highway in compliance with the code. Based on the total area of site disturbance and the coefficients found in the code, 7 overstory deciduous trees, 6 coniferous trees, and 14 shrubs are required and have been identified on the site plans. Non-residential uses on residential zoned property are required to maintain a minimum of 30 percent open

space. After all proposed improvements, the site will maintain approximately 85 percent open space.

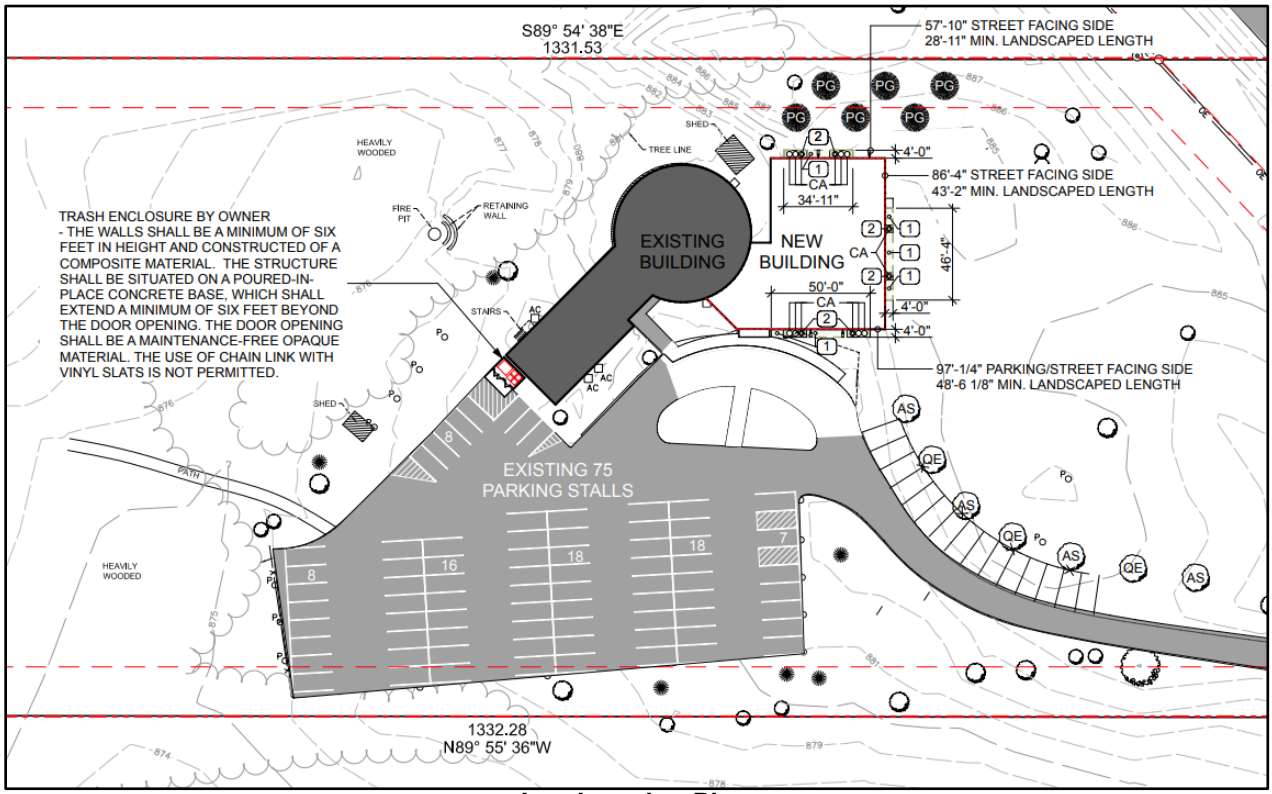


**Landscaping Plan**

The property contains areas onsite that are heavily wooded and meet the code definition of a large woodland tract. A large woodland tract is defined as a wooded area greater than or equal to 7,500 square feet of contiguous or nearly contiguous canopy cover. Title 11-3-13 permits up to 40 percent of qualifying trees to be removed before tree mitigation is required. The Applicant has not provided a tree inventory at this time due to the relatively small area of site disturbance and tree removal compared to the overall size and tree cover on the property; however, a condition has been added to complete a tree inventory per code requirements prior to the issuance of a building permit.

***Lighting***

The Applicant has proposed new lighting at the exit door on the new addition facing US 61. Additional new lighting is proposed at the new entryway on the addition. Title 11-3-10 requires light to be deflected from residential property lines or public streets. Additionally, reflected glare of spill light shall not exceed 0.5 foot-candle as measured on the property line when abutting any residential parcel. All proposed lighting will be downward directed. A photometric plan was completed, and zero footcandles are measured at the residential property line to the south and at the right-of-way line facing US 61.

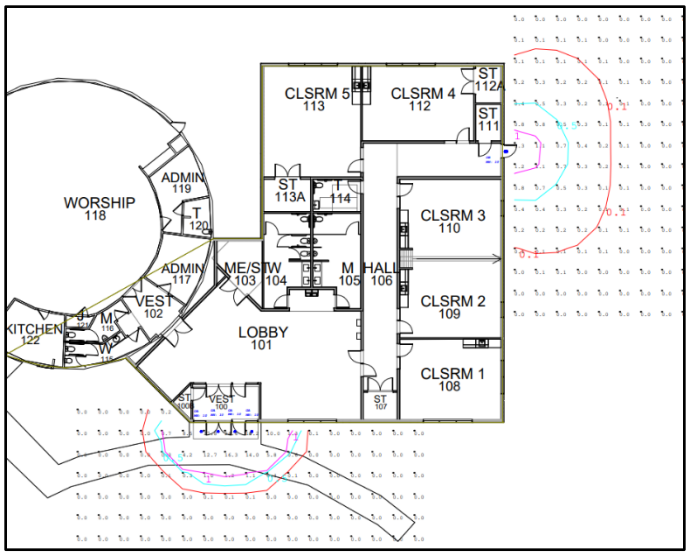


**Photometric Plan**

### *Signage*

The Applicant has included renderings of a building wall sign above the new entryway on the proposed building addition. A sign permit shall be required prior to approval of the design of the sign, per Title 12, Sign Regulations.

### *Utilities*

City utilities are not available to this site; therefore, the site is served by private well and septic systems. To meet the needs of the proposed addition, the property owner is proposing a new septic system. The new system has been designed by a licensed professional, and a sanitary sewer permit from Washington County has been issued. The mound system and tanks are proposed on the west side of the building. The existing well is currently located where the proposed addition will be. The property owner will need to verify the location of the new well and obtain approval for a new well prior to the issuance of a building permit.

**Proposed New Sanitary Sewer Location**

### *Grading and Storm Water Management*

The Applicant is proposing grading onsite to account for the building addition, stormwater treatment area, and new septic system. A detailed stormwater management plan was submitted, and the Applicant shall comply with all comments included in the City Engineer

Review Memo dated 2/3/2026. The site currently does not have any stormwater management infrastructure; however, the Applicant is now proposing new infrastructure to meet current code standards including a new infiltration basin north of the existing building. A Stormwater Maintenance Agreement will be required to be executed prior to issuance of a building permit.

***Public Hearing Notices***
The public hearing notice for the February 23, 2026, Planning Commission meeting was published in the St Paul Pioneer Press and mailed on February 11, 2026, to 10 property owners that are within 500 feet of the proposed project. Staff have not received any comments at the time of writing this report.

***Planning Commission Meeting***
The City's Planning Commission reviewed and held a public hearing on the applications at their February 23, 2026, meeting. Below is a summary of the inquiry and Planning Commission requests for clarification. The Commission unanimously voted (4-to-0) to recommend approval.

Planning Commission Requests for Clarification:

- The Applicant was asked if the proof of parking area would remain an unpaved surface, to which the Applicant responded yes, that area will remain unimproved at this time and was required to be reserved on the site plan in case the need arises for more parking in the future.

## Recommendation

The City Council is recommended to take the following actions:

1) Adopt Resolution 2026-035 approving the Site Plan Review for a 5,814 square foot building addition to the existing New Life Church building located at 11245 Point Douglas Drive South.

2) Approve the Stormwater Management Facilities Agreement with New Life Community Church.

**Attachments**
Project Narrative
Civil Plan Set dated: 1/28/2026
Site Survey
Septic Design
Septic Approval
Wetland Letter
Stormwater Management Report
MnDOT Review Letter
Setback Sheet
Letter of Concurrence
Lighting Spec Sheet
Engineering Review Memo
Stormwater Maintenance Agreement

CITY OF COTTAGE GROVE, MINNESOTA
CITY COUNCIL
RESOLUTION 2026-035

**A RESOLUTION APPROVING A SITE PLAN REVIEW FOR A BUILDING ADDITION AND ASSOCIATED SITE WORK AT NEW LIFE CHURCH LOCATED AT 11245 POINT DOUGLAS DRIVE SOUTH**

WHEREAS, Station 19 Architects, on behalf of New Life Church, applied for a Site Plan Review for a 5,814 square foot building addition to the existing church building for lobby space, restrooms, and five new classrooms, for the property legally described below:

The North one-half (N 1/2) of the North one-half (N 1/2) of the Southwest Quarter (SW 1/4) of the Northwest Quarter (NW 1/4) of Section Thirty-six (36), Township Twenty-seven (27), Range Twenty-one (21), except State Trunk Highway No. 61 as now established.

Abstract Property
PID: 36.027.21.23.0002

Commonly known as 11245 Point Douglas Drive South, Cottage Grove, Washington County, State of Minnesota.

WHEREAS, in 1981 a Conditional Use Permit for the original construction of the church was approved for New Life Church as Resolution 81-139 and

WHEREAS, in 1990 a Conditional Use Permit for a building addition and classroom use was approved for New Life Church as Resolution 90-89 and

WHEREAS, public hearing notices were mailed to property owners within 500 feet of the property, and a public hearing notice was published in the St. Paul Pioneer Press; and

WHEREAS, a planning staff report, which detailed specific information on the property and the application request, was prepared and presented; and

WHEREAS, the public hearing was open for public testimony. No public testimony was received. The applicant attended the public hearing and staff answered questions from the Planning Commission; and

WHEREAS, the Planning Commission unanimously (4-to-0 vote) recommended that the City Council approve the Site Plan Review at their February 23, 2026, meeting.

NOW, THEREFORE BE IT RESOLVED, the City Council of the City of Cottage Grove, Washington County, Minnesota, hereby approves the Site Plan Review for a building addition and associated site work on the parcel legally described above.

BE IT FURTHER RESOLVED, approval of the Site Plan Review is subject to the conditions listed below:

1. The project shall be completed in accordance with the plans submitted by the conditions of approval. Any significant changes to the plans, as determined by

planning staff, shall require review and approval by the Planning Commission and City Council.

2. Prior to the issuance of a building permit, the Applicant shall incorporate the recommendations, requirements, and evaluations noted in the comment letter dated 2/3/2026, and subject to modifications that are agreed to by the Applicant and City Engineer. All comments shall be adopted herein by reference.

3. All applicable permits (i.e., building, demo, electrical, grading, right-of-way, and mechanical) and a commercial plan review packet must be completed, submitted, and approved by the City prior to the commencement of any construction activities. Detailed construction plans must be reviewed and approved by the Building Official, City Engineer, and Fire Marshal.

4. Installation of landscaping shall occur in a timely fashion and be consistent with an approved plan. Prior to the issuance of a building permit, a letter of credit in the amount of 150 percent of the landscape estimate shall be submitted to the City as required by City ordinance. The financial guarantee shall be held until all required plantings are installed. At such time of installation, the Planning Department shall conduct an inspection to verify compliance with the landscape plan. If the inspection is approved, 50 percent of the financial guarantee shall be released. One year from the date of initial inspection, a follow-up inspection shall be conducted to verify survivability. If the follow-up inspection is approved, the remainder of the financial guarantee shall be released.

5. The grading and erosion control plan for the site must comply with NPDES II permit requirements. Erosion control devices must be installed prior to commencement of any grading activity. Erosion control must be performed in accordance with the recommended practices of the Minnesota Stormwater Manual and the conditions stipulated in Title 9-7-1, Erosion Control During Construction, of the City's Subdivision Ordinance. The Applicant shall be responsible for the costs for the City to inspect the site in relation to erosion control conformance.

6. The Applicant must provide the City with an as-built survey of grading.

7. The Applicant is responsible for removing debris from all adjacent public and private roadways during their grading and construction process. The adjacent streets shall be swept clean daily or as needed.

8. All areas of the site, where practical, shall be established and maintained per the approved final landscaping plan.

9. The Applicant shall provide a plan for ensuring establishment and survivability of the proposed seeding and landscape items. Sod shall be established along the building perimeter as shown on the landscape plans.

10. Signage is not approved as part of this application. Any proposed signage shall meet the requirements of the sign ordinance and require a separate permit.

11. A stormwater maintenance agreement shall be recorded prior to the issuance of a building permit.

12. A grading LOC is required prior to the issuance of a grading permit.

13. Should additional parking be needed, the Property Owner shall pave and stripe the proposed proof of parking area.

14. The Property Owner shall obtain approval for a new well from the State prior to the issuance of a building permit.

15. The well sealing report shall be sent to the City once the existing well is sealed.

Passed this 4th day of March, 2026.

Myron Bailey, Mayor

Attest:

Tamara Anderson, City Clerk

STATION 19
ARCHITECTS

4181 W. BROADWAY AVE | MPLS, MN 55422 | 612.623.1800

28 January 2026

**Re: Project Narrative – Project #4538**
Project: New Life EFree Church – Cottage Grove, MN

The project consists of a 5,814 square foot addition to an existing church building. The intention of the project is to provide a lobby, restrooms and five classrooms to be used for children religious education as accessory to places of religious worship. The existing building includes seating for 299 at the main worship / assembly hall, restrooms, administrative rooms and seven classrooms used for adult religious education.

The project includes site grading as required for the new addition and a new well and septic system. The exterior of the building addition will be a mix of stucco, engineered wood siding, aluminum storefront/windows, manufactured stone and thin brick.

The use of the building will remain the same with the primary days of operation will be Sundays and Wednesdays.

Respectfully Submitted,

Daniel E Torgerson, ALA, NCARB **01/28/26**
Principal

# NEW LIFE EFREE CHURCH

## COTTAGE GROVE, MN

## CITY SUBMITTAL

### PROJECT TEAM


**ARCHITECT**
Station 19 Architects, Inc.
4181 West Broadway Ave.
Minneapolis MN 55422
612.623.1800

**STRUCTURAL ENGINEER**
Innovative Structural Solutions
5279 Kyler Avenue NE
Albertville, MN 55301
763.425.9960

**CIVIL ENGINEER**
Rehder & Associates
3440 Federal Drive
Suite 100, Eagan, MN 55122
651.452.5051


### LOCATION MAP

### MATERIAL SYMBOLS

- CONCRETE
- CONCRETE MASONRY UNIT
- EARTH
- GYPSUM BOARD/PLASTER
- INSULATION - BATT
- INSULATION - RIGID
- MASONRY
- METAL
- PLYWOOD
- WOOD, FINISH
- WOOD, OSB

### SHEET INDEX


T00 TITLE SHEET

CIVIL
C0 COVER SHEET
C1 SITE DEMOLITION PLAN
C2 SITE DIMENSION PLAN
C3 GRADING, DRAINAGE, EROSION CONTROL & UTILITY PLAN
C4 DETAILS & SPECIFICATIONS

ARCHITECTURAL
A01 LANDSCAPE PLAN
A11 MAIN LEVEL CODE PLAN
A20 DEMOLITION PLAN
A30 FLOOR & ROOF PLAN
A60 EXTERIOR ELEVATIONS & BUILDING SECTIONS

SITE PHOTOMETRIC PLAN



STATION 19 ARCHITECTS
4181 W BROADWAY AVE, MINNEAPOLIS, MN 55422
612.623.1800 ■ STATION19.COM


**NOT FOR CONSTRUCTION**

I hereby certify that this plan, specification, or report was prepared by me or under my direct supervision and that I am a duly Licensed Architect under the laws of the state of MN.

SIGNATURE:

REGISTRATION #:

DATE: 01.28.2026

**NEW LIFE EFREE CHURCH**

11245 POINT DOUGLAS DR S
COTTAGE GROVE MN 55033

PROJECT NO: 4638

DRAWN BY: GT,


COPYRIGHT: 2026

Errors may occur in the transmission of electronic files. Station Nineteen Architects, Inc. is not responsible for any claims, damages or expenses arising out of the unauthorized use of the information contained in electronic files. It is the responsibility of the user to verify all layouts, dimensions and other related information. This document may not be used or copied without prior consent.


| NO | DATE | DESCRIPTION |
|---|---|---|
| | | |
| | | |
| | | |
| | | |
| | | |
| | | |
| | | |
| | | |
| | | |
| | | |
| | | |
| | | |
| | | |
| | | |
| | | |
| | | |
| | | |
| | | |

CITY SUBMITTAL

TITLE SHEET

**T00**

# NEW LIFE EFREE CHURCH

*11245 POINT DOUGLAS DRIVE SOUTH*
*COTTAGE GROVE, MN 55033*

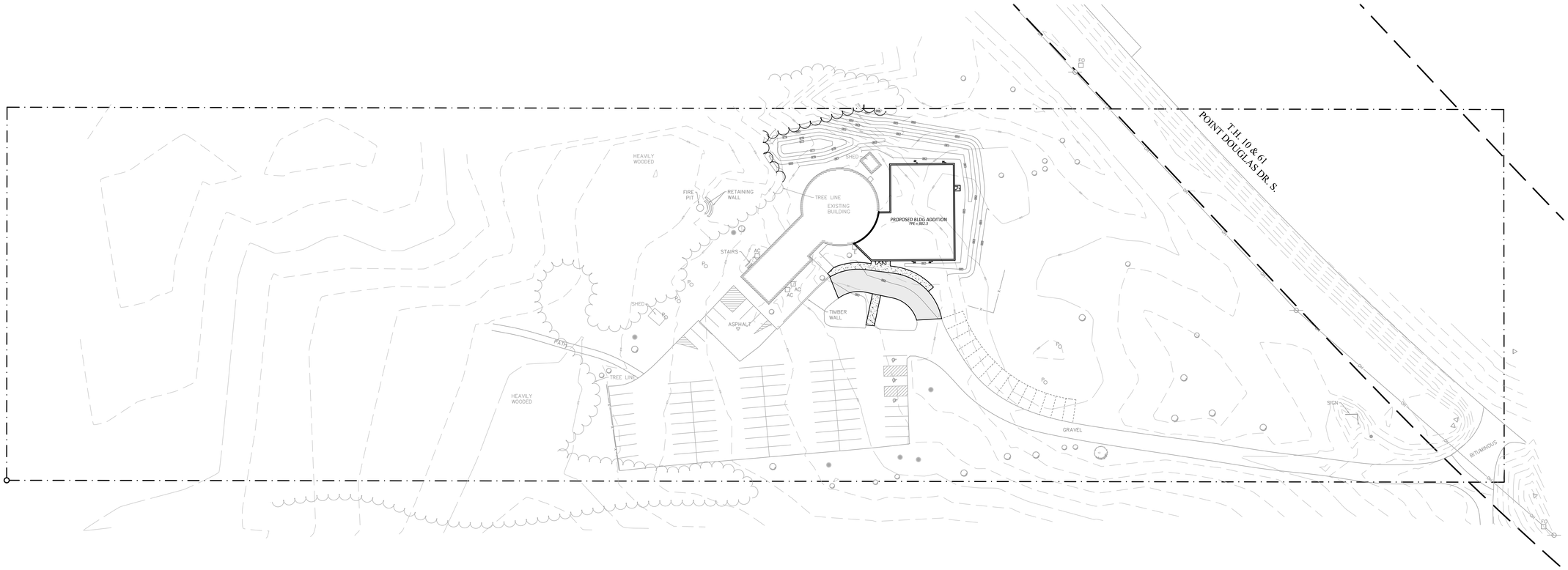


## GOPHER STATE ONE CALL

CALL 48 HOURS BEFORE YOU DIG
TWIN CITY AREA 651-454-0002
MN. TOLL FREE 1-800-252-1166

*Boundary topographical & utility information was prepared by M&P Associates. This information has not been verified as to its accuracy or completeness by Rehder & Associates, Inc.*

CODE COMPLIANCE:

1. WORK SHALL BE IN ACCORDANCE WITH APPLICABLE LAWS, CODES & REQUIREMENTS OF REGULATORY AGENCIES HAVING JURISDICTION.
2. NOTIFY THE OWNER'S ENGINEER OF DISCREPANCIES BETWEEN THE WORK AND APPLICABLE CODES. DO NOT WORK IN AN AFFECTED AREA UNTIL THE DISCREPANCY HAS BEEN RESOLVED.
3. VERIFY CODES IN EFFECT AT THE TIME OF THE NOTICE TO PROCEED AND STAY CURRENT WITH CODE CHANGES WHICH AFFECT THE WORK UNTIL SUBSTANTIAL COMPLETION.

## PROJECT CONTACTS:


*Nick Adam, P.E.*
*Civil Engineer*
*651-337-6729*
*nadam@rehder.com*

*TBD*
*General Contractor*
*XXX-XXX-XXX*
*XXXXXXXXXXX*


VICINITY MAP
NO SCALE

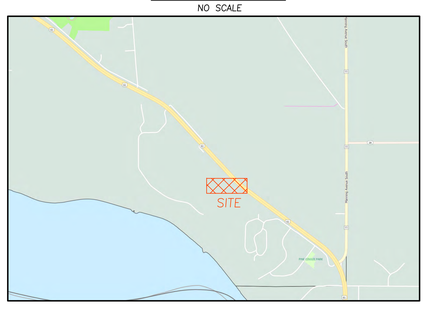


## SHEET INDEX


| TITLE | SHEET NO. |
|---|---|
| COVER SHEET | C0 |
| SITE DEMOLITION PLAN | C1 |
| SITE DIMENSION PLAN | C2 |
| GRADING, DRAINAGE, EROSION CONTROL & UTILITY PLAN | C3 |
| DETAILS & SPECIFICATIONS | C4 |


N

0 20 40 80 120
Scale in Feet


REHDER & ASSOCIATES, INC.
Civil Engineers & Land Surveyors
3440 Federal Drive, Suite 110
Eagan, MN 55122
Telephone 651-452-5051
www.rehder.com


PROJECT NO.: 251-2393.058 DRAWING FILE: 2393058.DWG

I, hereby certify that this plan was prepared by me or under my direct supervision and that I am a duly Licensed Professional Engineer under the laws of the State of Minnesota.

PRELIMINARY

Name _____ Date _____
Reg. No. _____

Issued
CITY SUBMITTAL 1-28-26

COVER SHEET
NEW LIFE EFREE CHURCH
CITY OF COTTAGE GROVE

SHEET NUMBER
C0

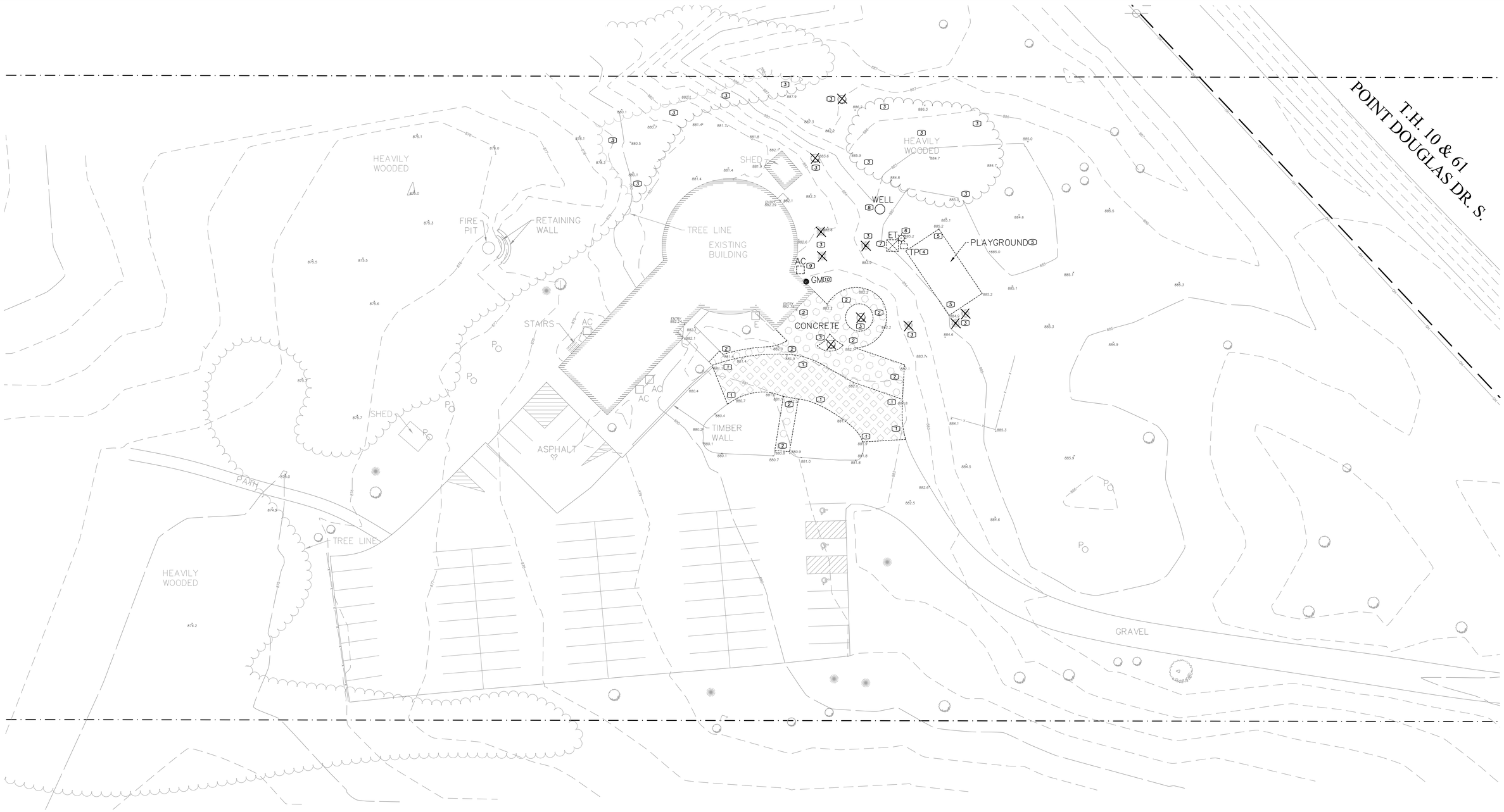


## DEMOLITION NOTES

1. – Remove bituminous pavement
2. – Remove concrete pavement
3. – Remove tree(s)
4. – Remove communication pedestal
5. – Remove & salvage playground
6. – Remove light pole
7. – Remove transformer
8. – Remove well
9. – Remove air conditioner
10. – Remove gas meter

## LEGEND

- EXISTING BITUMINOUS TO BE REMOVED
- EXISTING CONCRETE TO BE REMOVED
- BOUNDARY/ROW/BLOCK LINE
- EASEMENT
- BUILDING/PARKING SETBACK LINE
- 980 EXISTING CONTOUR
- × 995.50 EXISTING ELEVATION

N

0 10 20 40 60
Scale in Feet

CODE COMPLIANCE:

1. WORK SHALL BE IN ACCORDANCE WITH APPLICABLE LAWS, CODES & REQUIREMENTS OF REGULATORY AGENCIES HAVING JURISDICTION.
2. NOTIFY THE OWNER'S ENGINEER OF DISCREPANCIES BETWEEN THE WORK AND APPLICABLE CODES. DO NOT WORK IN AN AFFECTED AREA UNTIL THE DISCREPANCY HAS BEEN RESOLVED.
3. VERIFY CODES IN EFFECT AT THE TIME OF THE NOTICE TO PROCEED AND STAY CURRENT WITH CODE CHANGES WHICH AFFECT THE WORK UNTIL SUBSTANTIAL COMPLETION.

*Boundary topographical & utility information was prepared by M&P Associates. This information has not been verified as to its accuracy or completeness by Rehder & Associates, Inc.*

**GOPHER STATE ONE CALL**

CALL 48 HOURS BEFORE YOU DIG
TWIN CITY AREA 651-454-0002
MN. TOLL FREE 1-800-252-1166

REHDER & ASSOCIATES, INC.
Civil Engineers & Land Surveyors
3440 Federal Drive, Suite 110
Eagan, MN 55122
Telephone: 651-452-5051
www.rehder.com

PROJECT NO.: 251-2393.058 DRAWING FILE: 2393058.DWG

I hereby certify that this plan was prepared by me or under my direct supervision and that I am a duly Licensed Professional Engineer under the laws of the State of Minnesota.

PRELIMINARY

Name _____ Reg. No. _____ Date _____

Issued
CITY SUBMITTAL 1-28-26

SITE DEMOLITION PLAN
NEW LIFE EFREE CHURCH
CITY OF COTTAGE GROVE

SHEET NUMBER
C1

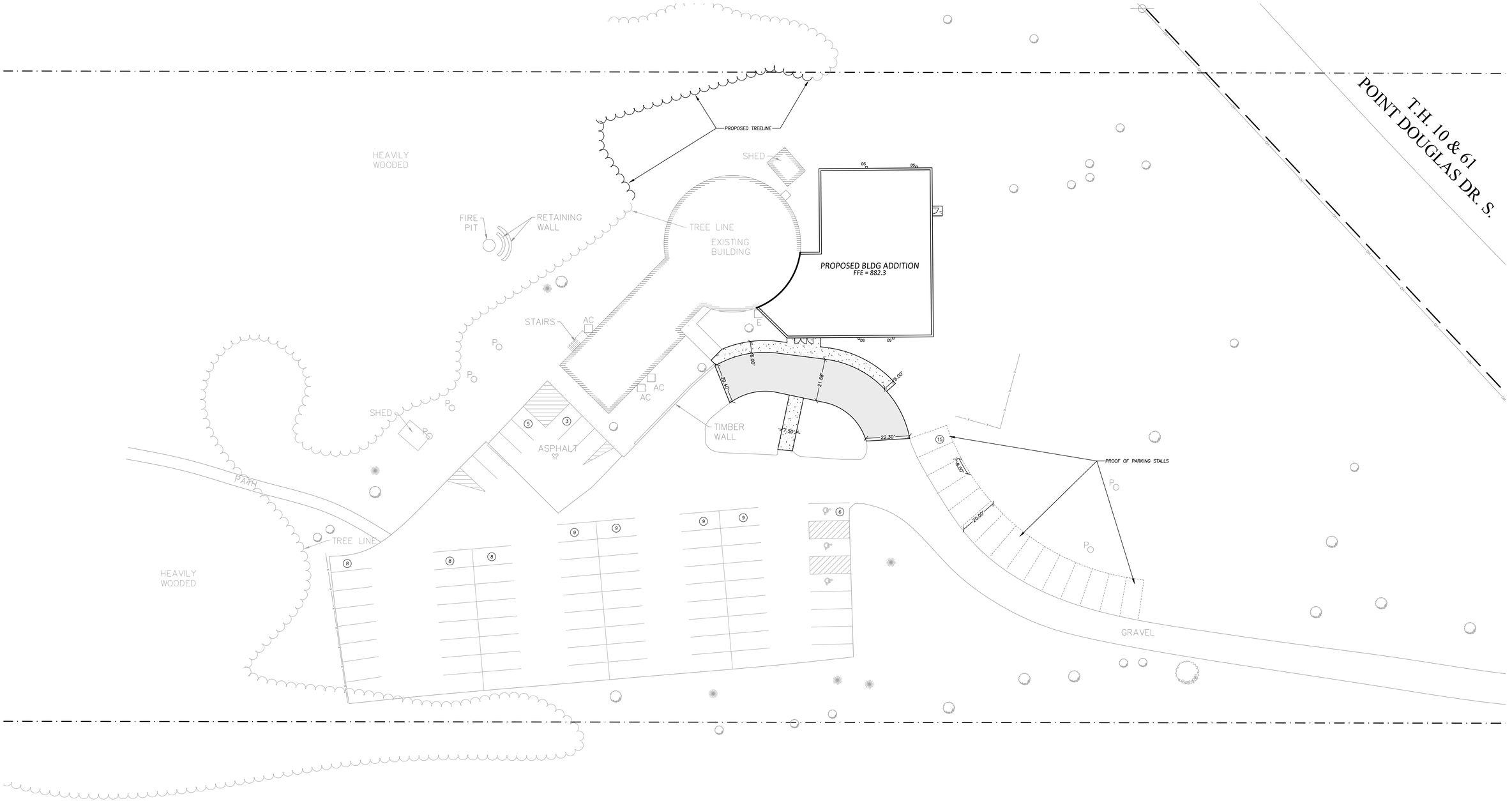


CODE COMPLIANCE:

1. WORK SHALL BE IN ACCORDANCE WITH APPLICABLE LAWS, CODES & REQUIREMENTS OF REGULATORY AGENCIES HAVING JURISDICTION.
2. NOTIFY THE OWNER'S ENGINEER OF DISCREPANCIES BETWEEN THE WORK AND APPLICABLE CODES. DO NOT WORK IN AN AFFECTED AREA UNTIL THE DISCREPANCY HAS BEEN RESOLVED.
3. VERIFY CODES IN EFFECT AT THE TIME OF THE NOTICE TO PROCEED AND STAY CURRENT WITH CODE CHANGES WHICH AFFECT THE WORK UNTIL SUBSTANTIAL COMPLETION.

*Boundary topographical & utility information was prepared by M&P Associates. This information has not been verified as to its accuracy or completeness by Rehder & Associates, Inc.*

## GOPHER STATE ONE CALL

CALL 48 HOURS BEFORE YOU DIG
TWIN CITY AREA 651-454-0002
MN. TOLL FREE 1-800-252-1166

## SITE SUMMARY

SITE AREA = 8.68 ACRES
DISTURBED AREA = 0.58 ACRES
EXISTING IMPERVIOUS AREA = 1.24 ACRES (14.3%)
POST CONSTRUCTION IMPERVIOUS AREA = 1.33 ACRES (15.3%)
OPEN SPACE = 100% - 15.3% = 84.7%
NEW IMPERVIOUS AREA = 1.33 - 1.24 = 0.09 ACRES
RECONSTRUCTED IMPERVIOUS AREA = 0.11 ACRES

### PARKING STALLS REQUIRED

| | |
|---|---|
| ASSEMBLY = 299 SEATS @ 1 STALL/4 SEATS = | = 75 STALLS |
| CHILD CLASSROOM = 11 CLASSROOMS @ 1 STALL/CLASSROOM | = 11 STALLS |
| CHILD CLASSROOM = 184 STUDENTS @ 1 STALL/100 STUDENTS | = 2 STALLS |
| TOTAL | = 88 STALLS |

### PARKING STALLS PROVIDED

| | |
|---|---|
| STANDARD STALLS | = 71 STALLS |
| ACCESSIBLE STALLS | = 3 STALLS |
| PROOF OF PARKING STALLS | = 15 STALLS |
| TOTAL | = 88 STALLS |

### LEGEND

- BOUNDARY/ROW/BLOCK LINE
- EASEMENT
- BUILDING/PARKING SETBACK LINE
- PROPOSED CONCRETE
- PROPOSED BITUMINOUS

N

0 10 20 40 60
Scale in Feet

REHDER & ASSOCIATES, INC.
Civil Engineers & Land Surveyors
3440 Federal Drive, Suite 110
Eagan, MN 55122
Telephone 651-452-5051
www.rehder.com

PROJECT NO.: 251-2393.058 DRAWING FILE: 2393058.DWG

I hereby certify that this plan was prepared by me or under my direct supervision and that I am a duly Licensed Professional Engineer under the laws of the State of Minnesota.

PRELIMINARY

Name _____ Date _____ Reg. No. _____

Issued
CITY SUBMITAL 1-28-26

SITE DIMENSION PLAN
NEW LIFE EFREE CHURCH
CITY OF COTTAGE GROVE

SHEET NUMBER
C2

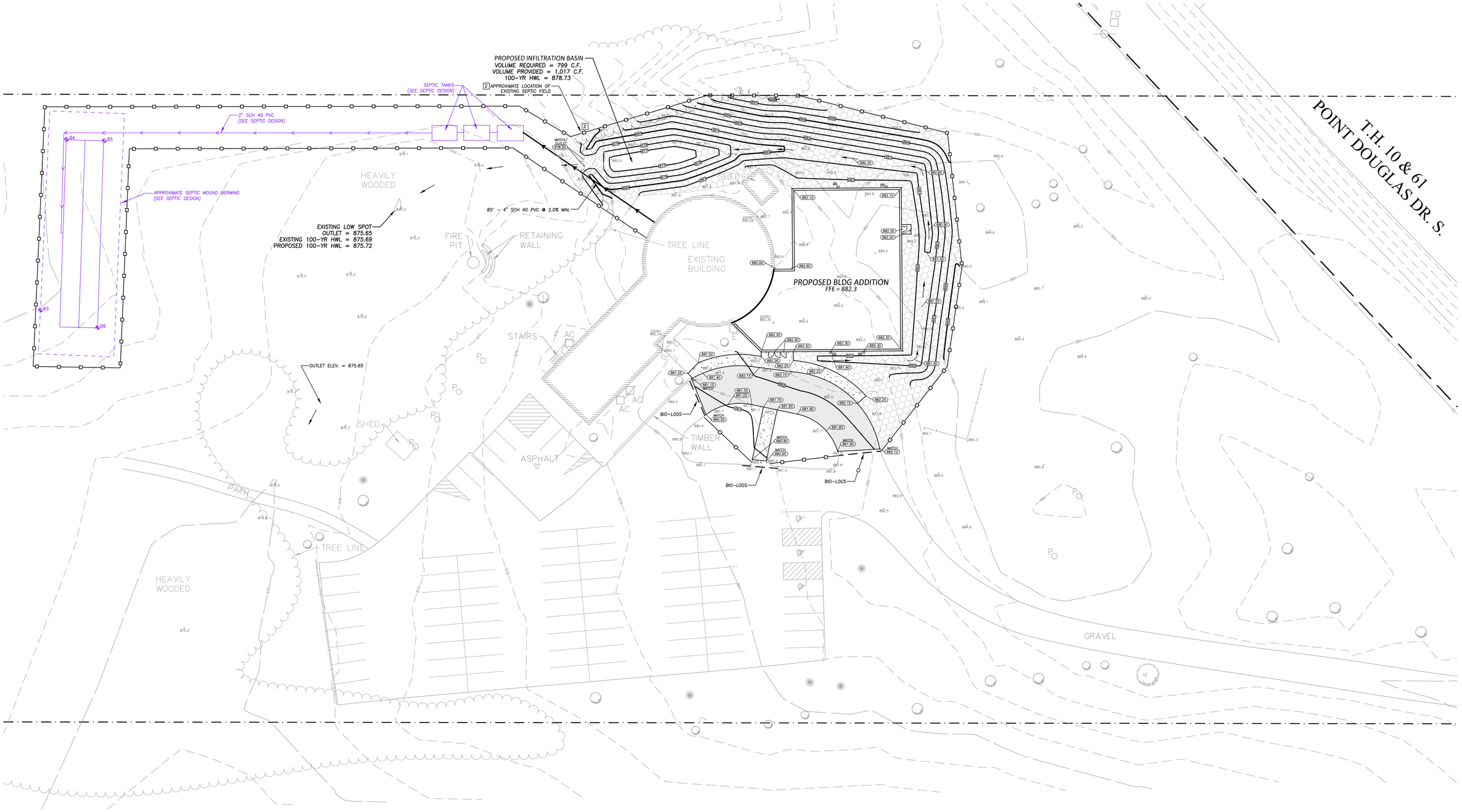


## GRADING NOTES

1 – *All elevations shown are to final surfaces.*

2 – *Contractor to field verify location of the existing septic drain field. Notify the Engineer of results found in the field.*

## EROSION CONTROL NOTES

1 – *All erosion control measures shown shall be installed prior to grading operations and maintained until all areas disturbed have been restored.*

2 – *Sweep paved public streets as necessary where construction sediment has been deposited.*

3 – *Each area disturbed by construction shall be restored per the specifications within 14 days after the construction activity in that portion of the site has temporarily or permanently ceased.*

4 – *Temporary soil stockpiles must have silt fence around them and cannot be placed in surface waters, including storm water conveyances such as curb and gutter systems, or conduits and ditches.*

5 – *The normal wetted perimeter of any temporary or permanent drainage ditch or swale that drains water from any portion of the construction site, or diverts water around the site, must be stabilized within 200 lineal feet from the property edge, or from the point of discharge into any surface water. Stabilization of the last 200 lineal feet must be completed within 24 hours after connecting to a surface water.*

6 – *Excess concrete/water from concrete trucks shall be disposed of in portable washout concrete basin or disposed of in a contained area.*

**NOTE: CONTRACTOR RESPONSIBLE FOR DESIGN AND CONSTRUCTION OF WELL AND SEPTIC SYSTEM.**

## LEGEND

- PROPOSED SANITARY SEWER
- PROPOSED CONCRETE
- PROPOSED BITUMINOUS
- 1050 PROPOSED CONTOUR
- 1023.54 PROPOSED ELEVATION
- SILT FENCE
- BIO-LOGS
- INLET PROTECTION DEVICE
- PROPOSED EC BLANKET CATEGORY 20 (MNDOT 3885)
- PROPOSED EC TRM CATEGORY 72 (MNDOT 3885)
- BOUNDARY/ROW/BLOCK LINE
- EASEMENT
- BUILDING/PARKING SETBACK LINE
- DRAINAGE ARROW
- 980 EXISTING CONTOUR
- × 995.50 EXISTING ELEVATION

N

0 10 20 40 60

Scale in Feet

CODE COMPLIANCE:

1. WORK SHALL BE IN ACCORDANCE WITH APPLICABLE LAWS, CODES & REQUIREMENTS OF REGULATORY AGENCIES HAVING JURISDICTION.
2. NOTIFY THE OWNER'S ENGINEER OF DISCREPANCIES BETWEEN THE WORK AND APPLICABLE CODES. DO NOT WORK IN AN AFFECTED AREA UNTIL THE DISCREPANCY HAS BEEN RESOLVED.
3. VERIFY CODES IN EFFECT AT THE TIME OF THE NOTICE TO PROCEED AND STAY CURRENT WITH CODE CHANGES WHICH AFFECT THE WORK UNTIL SUBSTANTIAL COMPLETION.

*Boundary topographical & utility information was prepared by M&P Associates. This information has not been verified as to its accuracy or completeness by Rehder & Associates, Inc.*

**GOPHER STATE ONE CALL**

CALL 48 HOURS BEFORE YOU DIG
TWIN CITY AREA 651-454-0002
MN. TOLL FREE 1-800-252-1166

REHDER & ASSOCIATES, INC.
Civil Engineers & Land Surveyors
3440 Federal Drive, Suite 110
Eagan, MN 55122
Telephone 651-452-5051
www.rehder.com

PROJECT NO.: 251-2393.058 DRAWING FILE: 2393058.DWG

I, hereby certify that this plan was prepared by me or under my direct supervision and that I am a duly Licensed Professional Engineer under the laws of the State of Minnesota.

Name _____ Date _____ Reg. No. _____

PRELIMINARY

Issued
CITY SUBMITTAL 1-28-26

GRADING, DRAINAGE, EROSION CONTROL & UTILITY PLAN
NEW LIFE EFREE CHURCH
CITY OF COTTAGE GROVE

SHEET NUMBER
C3

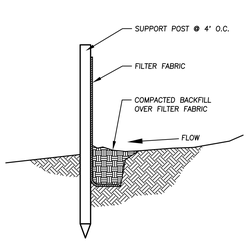


1 C4 SILT FENCE
NO SCALE

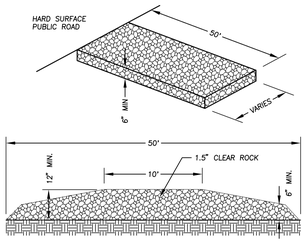


2 C4 ROCK CONSTRUCTION ENTRANCE
NO SCALE

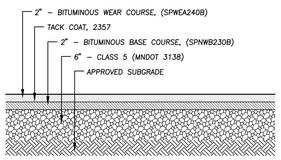


NOTE: PAVEMENT RECOMMENDATION PROVIDED BY INDEPENDENT TESTING TECHNOLOGIES, PROJECT 23-235

3 C4 PAVEMENT SECTION
NO SCALE

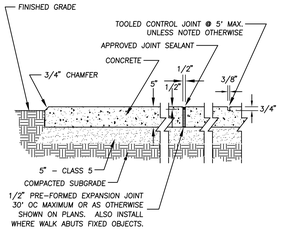


4 C4 CONCRETE SIDEWALK
NO SCALE

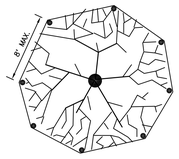


4' SNOW FENCE WITH POST 8' ON CENTER TO BE PLACED AROUND TREE AT THE DRIP LINE OF THE OUTER MOST BRANCHES.

5 C4 TREE PROTECTION
NO SCALE

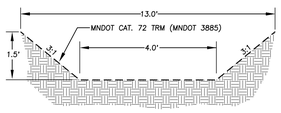


6 C4 BASIN OVERFLOW OUTLET
NO SCALE

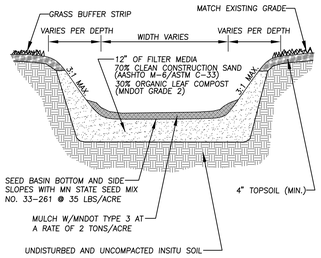


7 C4 INFILTRATION BASIN X-SECTION
NO SCALE

REHDER & ASSOCIATES, INC.
Civil Engineers & Land Surveyors
3440 Federal Drive, Suite 110
Eagan, MN 55122
Telephone 651-452-5051
www.rehder.com

PROJECT NO.: 251-2393.058 DRAWING FILE: 2393058.DWG

I hereby certify that this plan was prepared by me or under my direct supervision and that I am a duly Licensed Professional Engineer under the laws of the State of Minnesota.

PRELIMINARY

Name _____ Reg. No. _____ Date _____

Issued

| | |
|---|---|
| CITY SUBMITTAL | 1-28-26 |

DETAILS & SPECIFICATIONS
NEW LIFE EFREE CHURCH
CITY OF COTTAGE GROVE

SHEET NUMBER
C4

| LANDSCAPE MATERIALS | |
|---|---|
| KEY | CONTENT |
| 1 | TURF GRASS SOD (KENTUCKY BLUEGRASS) |
| 2 | MULCH W/ STEEL EDGING |

| PLANT SCHEDULE | | | | | |
|---|---|---|---|---|---|
| # | KEY | BOTANICAL NAME | COMMON NAME | SIZE | ROOT |
| SHRUBS | | | | | |
| 14 | CA | CALAMAGROSTIS ACUTIFLORA | KARL FOERSTER | #2 | CONT. |
| OVERSTORY DECIDUOUS | | | | | |
| 4 | AS | ACER SACCHARUM MARSHALL | SUGAR MAPLE | 2.5" CAL. | B&B |
| 3 | QE | QUERCUS ELLIPSOIDALIS | NORTHERN PIN OAK | 2.5" CAL. | B&B |
| CONIFEROUS | | | | | |
| 6 | PG | PICEA GLAUCA VAR. DENSATA | BLACK HILLS SPRUCE | 6' HEIGHT | B&B |

**§ 11-3-12: B.1.b.(1)** MIN. LANDSCAPING REQ.
The sides of a building that face a public street or parking lot shall be landscaped for a length equal to one-half (1/2) of the building dimension, with the landscaped region having an average depth of four feet (4')
239'-2"x 1/2 = **MIN. 119'-7" LONG x 4'-0" DEEP**

**§ 11-3-12: C.1.** LANDSCAPING MATERIALS
Three (3) or more
- a. **Sod**;
- b. **Mulch**;
- c. **Shrubs**;
- d. Coniferous trees;
- e. Ornamental trees;
- f. Overstory trees;
- g. Decorative rock;
- h. Decorative site amenities;
- i. Any other decorative landscape treatment; and/or
- j. Berms.

**§ 11-3-12: C.2.** MIN. SIZE REQ'D FOR VEGETATION

**§ 11-3-12: E.3.** TREE & SHRUB CALCULATIONS

22,215 Sq Ft Disturbed

| | Overstory Deciduous | Coniferous | Shrubs |
|---|---|---|---|
| Ratio | 0.0002786 | 0.00026 | 0.0006 |
| | **7 trees** (6.18) | **6 trees** (5.77) | **14 shrubs** (13.33) |

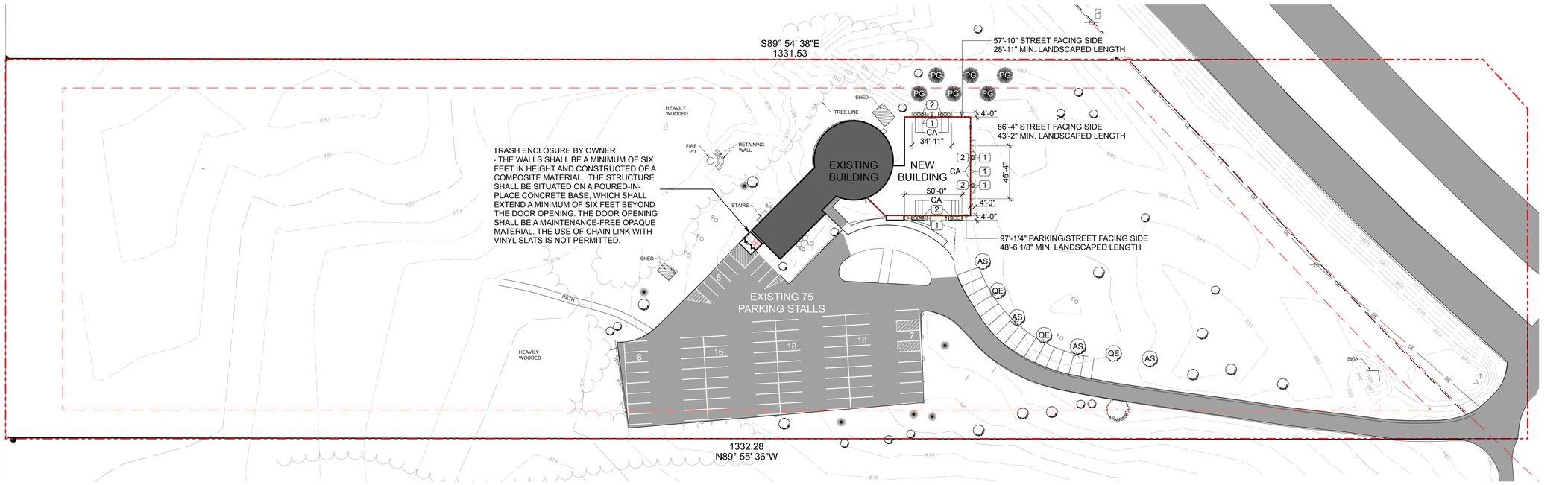


1 A01 LANDSCAPE PLAN
SCALE: 1" = 40'

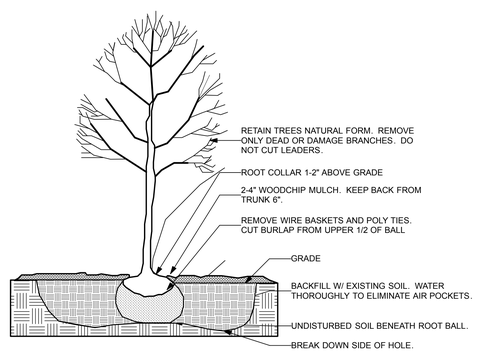


TREE PLANTING DETAIL - NOT TO SCALE

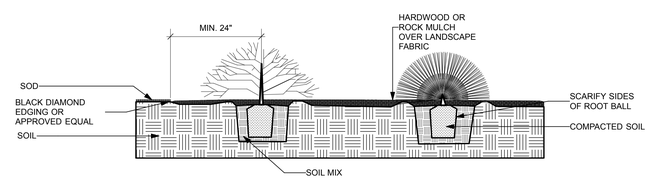


SHRUB PLANTING DETAIL - NOT TO SCALE

STATION 19 ARCHITECTS
4181 W BROADWAY AVE. MINNEAPOLIS, MN 55422
612.623.1800 ■ STATION19.COM

**NOT FOR CONSTRUCTION**

I hereby certify that this plan, specification, or report was prepared by me or under my direct supervision and that I am a duly Licensed Architect under the laws of the state of MN.

SIGNATURE:

REGISTRATION #:

DATE: 01.28.2026

# NEW LIFE EFREE CHURCH

11245 POINT DOUGLAS DR S
COTTAGE GROVE MN 55033

PROJECT NO: 4638

DRAWN BY: GT,

COPYRIGHT: 2026

Errors may occur in the transmission of electronic files. Station Nineteen Architects, Inc. is not responsible for any claims, damages or expenses arising out of the unauthorized use of the information contained in electronic files. It is the responsibility of the user to verify all layouts, dimensions and other related information. This document may not be used or copied without prior consent.

| NO | DATE | DESCRIPTION |
|---|---|---|

CITY SUBMITTAL

LANDSCAPE PLAN

**A01**

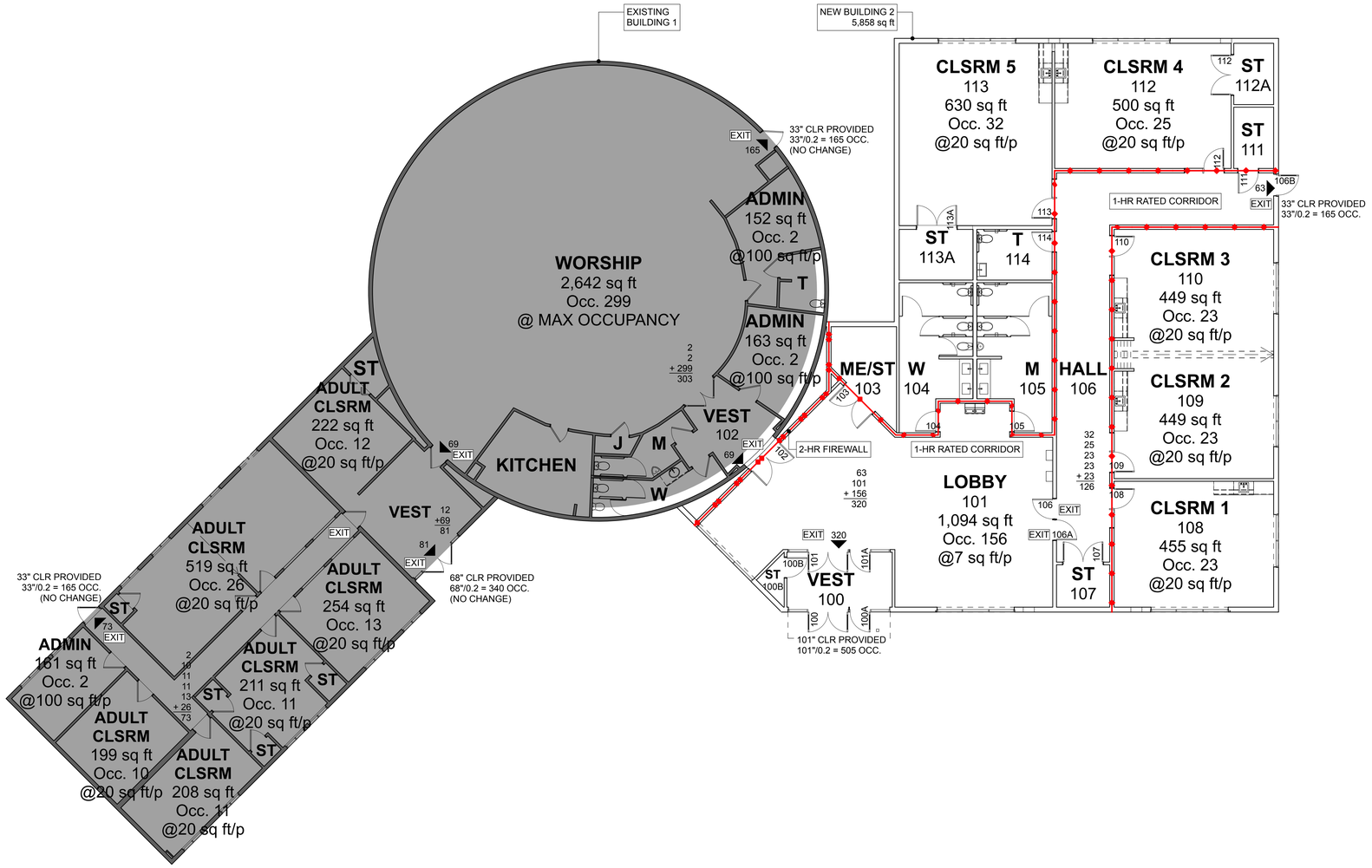


1 A11 CODE PLAN

SCALE: 1/8" = 1'-0"

N

0 4' 8' 16'

# GENERAL CODE NOTES

A. ALTERATIONS TO BE DONE IN A MANNER THAT MAINTAINS THE LEVEL OF FIRE PROTECTION PROTECTION PROVIDED.
B. AREAS SHOWN GREY ARE EXISTING TO REMAIN.
C. EXTEND AND MODIFY EXISTING FIRE ALARM SYSTEMS FOR NEW WORK.
D. BUILDING TO BE UNSPRINKLED

# CODE REVIEW SUMMARY

MN BUILDING CODE 2020

CH. 3 **DESCRIPTION OF OCCUPANCY:**
A-3
(S508) ACCESSORY OCCUPANCIES OF STORAGE & ADMINISTRATION DO NOT EXCEED 10%
(S305.1) EDUCATIONAL ROOMS AS ACCESSORY TO PLACES OF RELIGIOUS WORSHIP AND HAVE OCCUPANT LOADS LESS THAN 100 PEOPLE PER ROOM SHALL BE CLASSIFIED AS A-3

CH. 6 **TYPE OF CONSTRUCTION:**
*TYPE VB*, *UNSPRINKLERED*

| | | | |
|---|---|---|---|
| T601 | **FIRE RESISTANCE RATING REQUIREMENTS** | **REQUIRED** | **PROVIDED** |
| | STRUCTURAL FRAME (COLUMNS, GIRDERS, TRUSSES) | 0 HR | 0 HR |
| | BEARING WALLS - EXTERIOR | 0 HR | 0 HR |
| | BEARING WALLS - INTERIOR | 0 HR | 0 HR |
| | NONBEARING WALLS - EXTERIOR | 0 HR | 0 HR |
| | NONBEARING WALLS - INTERIOR | 0 HR | 0 HR |
| | FLOOR CONSTRUCTION (INCLUDING SUPPORTING BEAMS & JOISTS | 0 HR | 0 HR |
| | ROOF CONSTRUCTION (INCLUDING SUPPORTING BEAMS & JOISTS | 0 HR | 0 HR |

T602 **FIRE RESISTANCE RATING REQ. FOR EXTERIOR WALLS BASED ON FIRE SEPARATION DISTANCE**
FIRE SEPARATION DISTANCE: >30' REQUIRED SEPARATION: 0 HR

**ALLOWABLE HEIGHT AND BUILDING AREAS**

| | | | |
|---|---|---|---|
| S504 | ALLOWABLE HEIGHT | | 1 STORY, 40 FT |
| | PROPOSED/EXISTING HEIGHT | | **26 FT NO CHANGE** |
| S506 | ALLOWABLE AREA PER FLOOR (Aa = At+(NSxIf))= 6,000+(6,000 x If)) | | |
| | ALLOWABLE AREA FOR BUILDING 1 | | 8,968 SF |
| | **ALLOWABLE AREA FOR BUILDING 2** | | **9,078 SF** |
| | BASE ALLOWABLE AREA (At): NS = 6,000 | | |
| | FRONTAGE INCREASE (If): (If = (F/P-0.25)W/30) | BLDG 1 | **BLDG 2** |
| | BUILDING PERIMETER WHICH FRONTS A PUBLIC WAY (F) | 283 FT | **251 FT** |
| | PERIMETER OF ENTIRE BUILDING (P) | 380 FT | **329 FT** |
| | WIDTH OF PUBLIC WAY OR OPEN SPACE (W) | >30 FT | >30 FT |
| | PROPOSED/EXISTING AREA | | |
| | EXISTING BUILDING - BUILDING 1 | | NO INCREASE - OK |
| | NEW BUILDING - BUILDING 2 | | 5,858 SF NEW - OK |

# PLUMBING REVIEW SUMMARY

MN BUILDING CODE 2020 SECTION 2902

MINIMUM NUMBER OF PLUMBING FIXTURES
TOTAL OCCUPANCY: 425 OCC.
425 OCC./2 = 213 MEN AND 213 WOMEN

| | REQUIRED | PROVIDED |
|---|---|---|
| MENS WATER CLOSETS (213/150) | 2 | 2 |
| MENS LAVATORIES (213/200) | 2 | 3 |
| WOMENS WATER CLOSETS (213/75) | 3 | 5 |
| WOMENS LAVATORIES (213/200) | 2 | 3 |
| ADULT CHANGING TABLE (MAC SEC. 1109.2.4.1) WHERE AN AGGREGATE OF 6 OR MORE WATER CLOSETS ARE REQ'D | 0 | NA |
| UNISEX RESTROOMS | 1 | 2 |
| DRINKING FOUNTAIN (1:1000) EACH FOUNTAIN TO BE HI-LO | 1 | 1 |
| SERVICE SINK | 1 | 1 |


STATION 19 ARCHITECTS
4181 W BROADWAY AVE, MINNEAPOLIS, MN 55422
612.623.1800 ■ STATION19.COM


**NOT FOR CONSTRUCTION**

I hereby certify that this plan, specification, or report was prepared by me or under my direct supervision and that I am a duly Licensed Architect under the laws of the state of MN.

SIGNATURE:

REGISTRATION #:

DATE: 01.28.2026

## NEW LIFE EFREE CHURCH

11245 POINT DOUGLAS DR S
COTTAGE GROVE MN 55033

PROJECT NO: 4638

DRAWN BY: GT,


COPYRIGHT: 2026

Errors may occur in the transmission of electronic files. Station Nineteen Architects, Inc. is not responsible for any claims, damages or expenses arising out of the unauthorized use of the information contained in electronic files. It is the responsibility of the user to verify all layouts, dimensions and other related information. This document may not be used or copied without prior consent.


| NO | DATE | DESCRIPTION |
|---|---|---|

CITY SUBMITTAL

MAIN LEVEL CODE PLAN

**A11**

## GENERAL DEMO NOTES

A. CONTRACTOR TO REMOVE ALL ITEMS DESIGNATED UNDER SPECIFIC DEMO NOTES. ITEMS TO BE REMOVED ARE SHOWN DASHED.
B. FIELD VERIFY ALL DEMOLITION REQUIREMENTS. VERIFY ANY DISCREPANCIES WITH ARCHITECT PRIOR TO REMOVAL.
C. REFERENCE SITE DEMO PLANS, FLOOR PLANS, AND DETAILS FOR ADDITIONAL DEMOLITION NOTES. VERIFY ANY DISCREPANCIES WITH ARCHITECT PRIOR TO REMOVAL.
D. DEMO CONTRACTOR RESPONSIBLE FOR ALL TEMPORARY SHORING OR SUPPORT OF EXISTING STRUCTURAL ELEMENTS DURING CONSTRUCTION.
E. PROTECT ALL EXISTING WORK TO PREVENT DAMAGE FROM THE ELEMENTS DURING DEMOLITION AND UNTIL NEW WORK IS IN PLACE.
F. WHERE ENTIRE WALLS ARE INDICATED TO BE REMOVED, REMOVE ENTIRE WALL INCLUDING ALL INTEGRAL DOORS, WINDOWS, FRAMES, MECHANICAL DUCTING AND PIPING, ELECTRICAL CONDUIT, EQUIPMENT, OR OTHER MISCELLANEOUS ITEMS.
G. WHERE FLOORS ARE SHOWN TO BE REMOVED, REMOVE OR PATCH AS REQUIRED AND PREPARE FOR NEW FLOOR FINISH.
H. PROVIDE ALL MISCELLANEOUS DEMOLITION.
I. REMOVE ALL FINISHES FOR ALL MINOR DEMOLITION REQUIRED TO PROVIDE A CLEAN SUITABLE SURFACE FOR INSTALLATION OF NEW FINISHES AND CONSTRUCTION.
J. PATCH HOLES IN FLOORS, WALLS, CEILINGS, ETC. WHERE WINDOWS, DOORS, OR EQUIPMENT WILL BE PROVIDED.
K. OWNER TO REMOVE ALL FURNISHING AND MOVEABLE EQUIPMENT.
L. ALL OTHER EQUIPMENT REMOVAL TO BE THE RESPONSIBILITY OF THE DEMOLITION CONTRACTOR UNLESS NOTED OTHERWISE.
M. ALL OTHER MATERIALS AND ITEMS OF DEBRIS OF DEMOLITION SHALL BE DISPOSED OF OFF SITE BY THE DEMOLITION CONTRACTOR TO PROVIDE A CLEAN SUITABLE SURFACE FOR THE INSTALLATION OF NEW WORK.
N. COORDINATE POWER, WATER SUPPLY, AND OTHER SERVICE INTERRUPTIONS WITH OWNER.
O. AREAS SHOWN GRAY ARE EXISTING TO REMAIN.

## SPECIFIC DEMO NOTES

1. STUD WALL & ALL INTEGRAL COMPONENTS INCLUDING ANY DOORS & WINDOWS
2. ACT CEILINGS INCLUDING GRID, LIGHTS, & ALL ACCESSORIES
3. FLOORING & BASE
4. CONCRETE STOOP AS REQUIRED FOR NEW CONSTRUCTION
5. EXTERIOR ROOF OVERHANG/CANOPY
6. LIGHTING
7. SEE CIVIL PLANS FOR EXTENT OF SITE DEMO
8. DOOR & FRAME
9. ROOF & ARCH TO REMAIN
10. RELOCATE UTILITY CONNECTION
11. DORMER & WINDOW

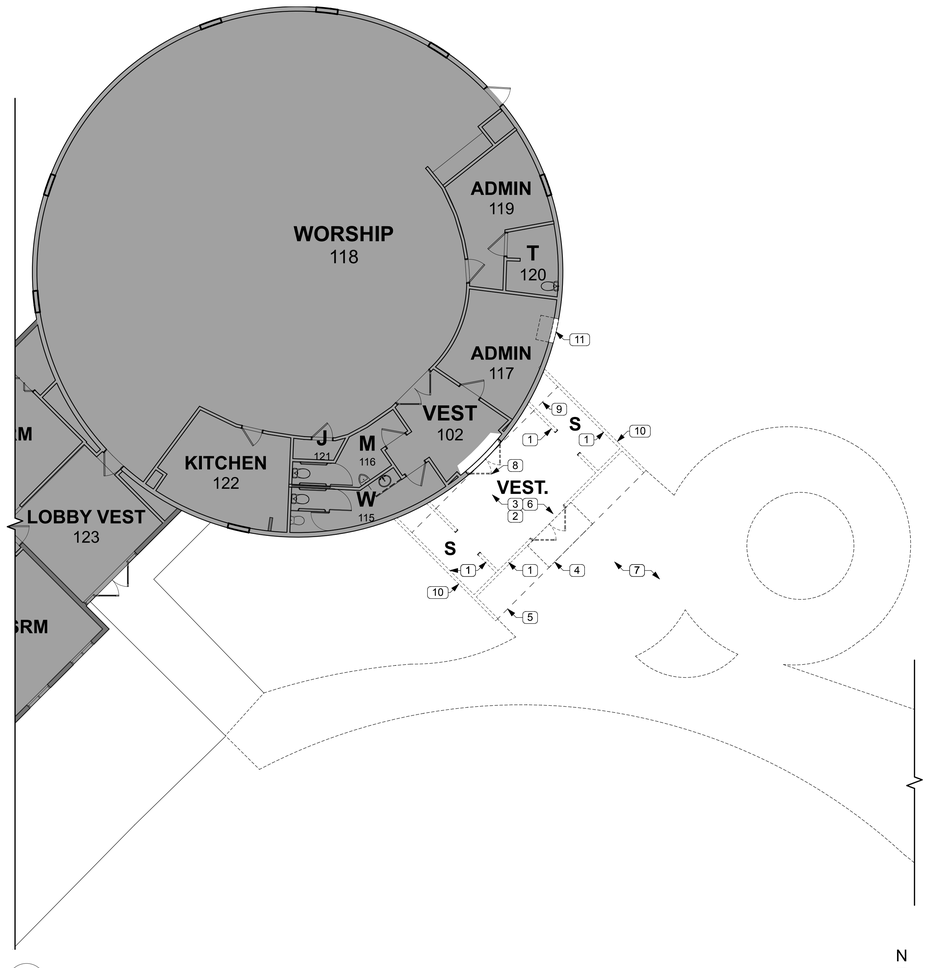


1 / A20 MAIN LEVEL DEMO PLAN
SCALE: 1/8" = 1'-0"

STATION 19 ARCHITECTS
4181 W BROADWAY AVE, MINNEAPOLIS, MN 55422
612.623.1800 ■ STATION19.COM

**NOT FOR CONSTRUCTION**

I hereby certify that this plan, specification, or report was prepared by me or under my direct supervision and that I am a duly Licensed Architect under the laws of the state of MN.

SIGNATURE:

REGISTRATION #:

DATE: 01.28.2026

# NEW LIFE EFREE CHURCH

11245 POINT DOUGLAS DR S
COTTAGE GROVE MN 55033

PROJECT NO: 4638
DRAWN BY: GT,
COPYRIGHT: 2026

Errors may occur in the transmission of electronic files. Station Nineteen Architects, Inc. is not responsible for any claims, damages or expenses arising out of the unauthorized use of the information contained in electronic files. It is the responsibility of the user to verify all layouts, dimensions and other related information. This document may not be used or copied without prior consent.

| NO | DATE | DESCRIPTION |
|---|---|---|

CITY SUBMITTAL

DEMOLITION PLAN

**A20**

# GENERAL PLAN NOTES

A. ALL WALLS TO BE MTL STUDS, INSULATED AND RUN TO BOTTOM OF DECK OR STRUCTURE UNLESS OTHERWISE NOTED.
B. ALL EXTERIOR WINDOWS TO BE ALUMINUM STOREFRONT.
C. ALL INTERIOR DOORS & WINDOWS TO BE HOLLOW METAL FRAMES WITH WOOD DOORS UNLESS NOTED OTHERWISE.
D. ALL CEILINGS TO BE 2'x2' ACT W/ LED DIRECT/INDIRECT LIGHTS UNLESS NOTED OTHERWISE.
E. SEE SITE PLAN FOR PAVING, SIDEWALKS, PARKING, ETC.
F. AREAS SHOWN GREY ARE EXISTING TO REMAIN.

# SPECIFIC PLAN NOTES

1. CONCRETE STOOP WITH FROST FOOTINGS
2. POLISHED CONCRETE FLOOR & VINYL BASE
3. H.C. PUSH PADS
4. CANOPY ABOVE SHOWN DASHED
5. 2-HR RATED FIRE WALL
6. 1-HR RATED FIRE PARTITION
7. ALUMINUM STOREFRONT DOORS/WINDOWS
8. WOOD VENEER BASE CABINET W/ SOLID SURFACE COUNTER & SINK AS OCCURS - ADD ALT #1
9. ADA FLOOR MOUNTED W.C. W/ FLUSH VALVE, GRAB BARS, AND WALL MOUNTED SINK WITH WALL SCONCES EACH SIDE OF MIRROR AND LED PENDANT CAN LIGHTS.
10. CARPET TILE & VINYL BASE
11. WALK-OFF MAT & VINYL BASE
12. CERAMIC TILE FLOOR & WALLS - FULL HEIGHT CERAMIC TILE ALL WALLS
13. 12'-0" ACT CEILING WITH RECESSED 2X2 DIRECT/INDIRECT LED TROFFERS
14. OPERABLE PARTITION WALL SYSTEM - ADD ALT #1
15. HI-LO DRINKING FOUNTAIN W/ BOTTLE FILLER
16. WOOD VENEER TALL STORAGE CABINETS - ADD ALT #1
17. SOLID SURFACE CHECK-IN KIOSKS - PROVIDE ELECTRICAL - ADD ALT #1
18. 12'-0" ACT CEILING WITH RECESSED CAN LED FIXTURES - 1 HOUR FIRE RATING - PROVIDE (2) LAYERS 5/8" GYP AT UNDERSIDE OF ROOF STRUCTURE
19. SOLID SURFACE VANITY W/ INTEGRAL BOWLS & 18" X 36" FRAMED MIRRORS
20. ADA FLOOR MOUNTED W.C. W/ FLUSH VALVE, GRAB BARS, & MTL TOILET PARTITIONS
21. URINALS W/ FLUSH VALVES
22. ADA FLOOR-MOUNTED W.C. & GRAB BARS FOR AMBULATORY STALL
23. FLOOR-MOUNTED ADA HEIGHT W.C.

# SPECIFIC PLAN NOTES CONT.

24. 2-HR RATED H.M. FRAME & SOLID CORE WD DOOR W/ PANIC HARDWARE & MAG. HOLD OPENS - PROVIDE POWER
25. H.M. FRAME, SOLID CORE WD DOOR W/ FULL GLASS, PANIC HARDWARE & PUSH TO HOLD OPEN CLOSER
26. 1-HR RATED H.M. FRAME & SOLID CORE WOOD DOOR W/ CLASSROOM FUNCTION HARDWARE & CLOSER
27. 1-HR RATED H.M. FRAME & SOLID CORE WOOD DOOR W/ OCCUPANCY INDICATOR & CLOSER
28. 1-HR RATED H.M. FRAME W/ SIDE LITE & SOLID CORE WOOD DOOR W/ CLASSROOM FUNCTION HARDWARE & CLOSER
29. H.M. FRAME & SOLID CORE WD DOOR W/ CLASSROOM FUNCTION HARDWARE
30. ALUMINUM DOOR W/ PANIC HARDWARE AND CLOSER
31. ALUMINUM DOOR W/ PUSH/PULL HARDWARE AND CLOSER
32. ALUMINUM DOOR W/ PANIC HARDWARE, CLOSER, & H.C. ACTUATOR
33. ALUMINUM DOOR W/ PUSH/PULL HARDWARE, CLOSER. & H.C. ACTUATOR
34. TYP. EXTERIOR WALL - STUCCO O/ WEATHER BARRIER, SELF-FURRING METAL LATH, 2" CONT. INSUL. W/ DRAINAGE CHANNELS, SHEATHING, 2x6 WD STUD WALLS @ 16" O.C., R-21 BATT INSULATION, VAPOR BARRIER, & 5/8" TYPE 'X' GWB
35. 10'-0" 5/8" GWB ON 2x10 FRAMING W/ RECESSED CAN LED FIXTURES
36. (2) LAYERS 5/8" TYPE 'X' GWB ON EXISTING FOR 1-HR PROTECTION
37. INFILL & PATCH DORMER OPENING TO MATCH EXISTING CONSTRUCTION
38. 12'-0" ACT CEILING WITH RECESSED CAN LED FIXTURES
39. MANUFACTURED STONE O/ 1" CONTINUOUS INSULATION O/ (2) LAYERS WEATHER BARRIER, 5/8" PLYWD SHEATHING, 2x6 WD STUD WALLS @ 16" O.C., R-21 BATT INSULATION, VAPOR BARRIER, & 5/8" TYPE 'X' GWB
40. PROVIDE POWER FOR CANOPY MOUNTED SIGNAGE
41. PROVIDE EXTERIOR POWER

# GENERAL ROOF NOTES

A. ALL PARAPET CAPS, SCUPPERS & DOWN SPOUTS TO BE PREFINISHED METAL.
B. PROVIDE 3' RAIN WATER LEADERS & CONCRETE SPLASH BLOCKS AT THE BASE OF ALL DOWNSPOUTS.
C. PROVIDE INSULATION CRICKETS AT MECHANICAL UNITS AS NEEDED FOR POSITIVE DRAINAGE.
D. PROVIDE MEMBRANE FLASHING AT ALL ROOF PENETRATIONS & CURBS.
E. "TI" IS ABBREVIATION FOR TAPERED INSULATION.
F. SEE MECH. FOR ROOF DRAINS & ADDITIONAL EQUIPMENT.
G. MEP TO BE DESIGN BUILD BY CONTRACTOR. RTU LOCATIONS & NUMBER SHOWN FOR DESIGN INTENT ONLY. CONTRACTOR TO PROVIDE CODE COMPLIANT INSTALLATION AND TO COORDINATE & REVIEW LOCATIONS WITH ARCHITECT PRIOR TO INSTALLATION. VERIFY CLEARANCE REQUIREMENTS FOR RTU SCREENING.
H. AREAS SHOWN GREY ARE EXISTING TO REMAIN.

# SPECIFIC ROOF PLAN NOTES

1. R-30 MIN. INSULATION STRUCTURALLY SLOPED
2. BALLASTED EPDM ROOFING
3. 1/2"/1'-0" TAPERED INSULATION
4. EPDM EXPANSION JOINT
5. THRU-WALL SCUPPER W/ INTEGRAL OVERFLOW, PREFINISHED MTL DOWNSPOUT & CONCRETE SPLASH BLOCK
6. FULLY ADHERED EPDM MEMBRANE W/ SLOPED INSULATION
7. NO ROOF PENETRATIONS WITHIN 4'-0" OF FIRE WALL
8. PATCH/REPAIR ASPHALT SHINGLES AS REQ'D AT ROOF TIE-IN

ROOFTOP MECHANICAL EQUIPMENT AS VIEWED FROM THE CENTERLINE OF ALL ADJACENT RIGHTS OF WAYS AND FROM PROPERTY LINES ADJACENT TO RESIDENTIAL PROPERTIES MUST BE SCREENED. THE SCREENING IS TO BE PROVIDED BY THE MECHANICAL CONTRACTOR.

GROUND MOUNTED MECHANICAL EQUIPMENT ACCESSORY TO THE PRINCIPAL STRUCTURE THIRTY INCHES OR GREATER THAN TWELVE CUBIC FEET SHALL BE SCREENED FROM PUBLIC VIEWS WITH LANDSCAPING, BERMING OR SCREEN WALL.

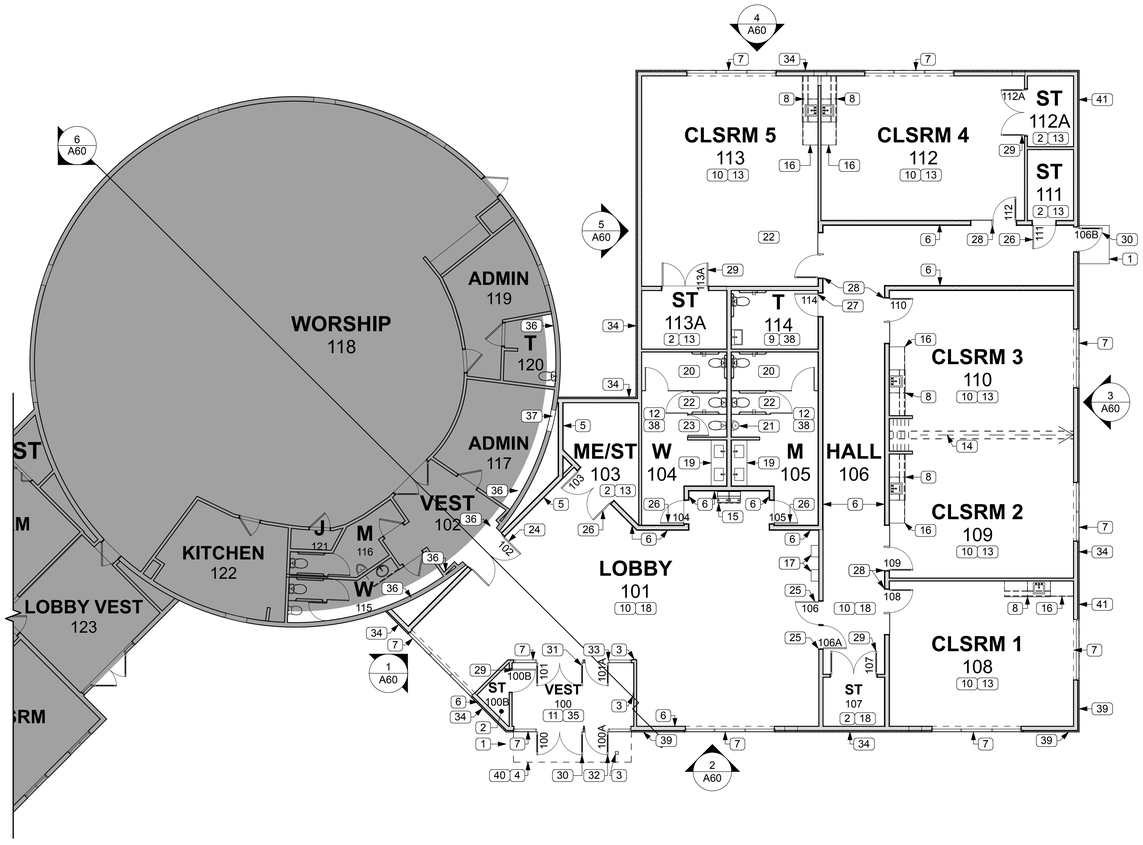


1 A30 MAIN LEVEL FLOOR PLAN
SCALE: 1/8" = 1'-0"

N
0 4' 8' 16'

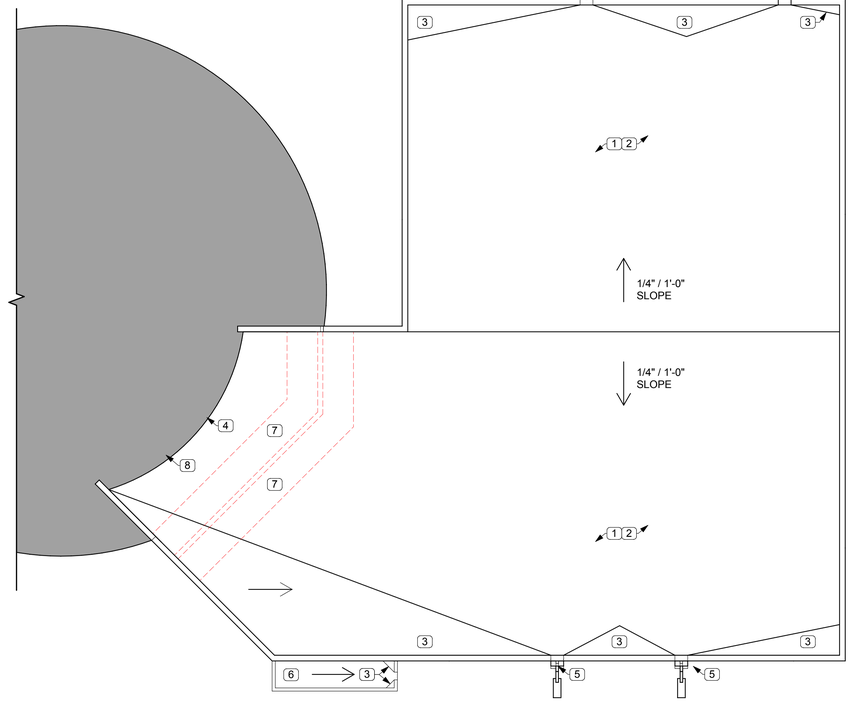


2 A30 ROOF PLAN
SCALE: 1/8" = 1'-0"

N
0 4' 8' 16'

STATION 19
ARCHITECTS
4181 W BROADWAY AVE, MINNEAPOLIS, MN 55422
612.623.1800 ■ STATION19.COM

**NOT FOR CONSTRUCTION**

I hereby certify that this plan, specification, or report was prepared by me or under my direct supervision and that I am a duly Licensed Architect under the laws of the state of MN.

SIGNATURE:

REGISTRATION #:

DATE: 01.28.2026

## NEW LIFE EFREE CHURCH

11245 POINT DOUGLAS DR S
COTTAGE GROVE MN 55033

PROJECT NO: 4638
DRAWN BY: GT,
COPYRIGHT: 2026

Errors may occur in the transmission of electronic files. Station Nineteen Architects, Inc. is not responsible for any claims, damages or expenses arising out of the unauthorized use of the information contained in electronic files. It is the responsibility of the user to verify all layouts, dimensions and other related information. This document may not be used or copied without prior consent.

| NO | DATE | DESCRIPTION |
|---|---|---|

CITY SUBMITTAL

FLOOR & ROOF PLAN

**A30**

## ELEVATION & SECTION NOTES

1. STUCCO
2. PREFINISHED METAL PARAPET CAP
3. PREFINISHED METAL GRADE FLASHING - EXTEND 6" BELOW GRADE O/ 2" RIGID INSUL. & DAMP PROOFING
4. CANOPY W/ PREFINISHED METAL ROOF EDGE & GUTTER. METAL SOFFIT PANELS AND RECESSED LED CAN LIGHTING
5. 4" X 4" GALVANIZED TUBE STEEL CROSS WITH HIGH PERFORMANCE PAINT
6. JAMB RETURN WHERE BUILDINGS MEET
7. INTERNALLY ILLUMINATED SIGNAGE - PROVIDE POWER
8. STUCCO REVEAL JOINT
9. STOREFRONT DOOR OR WINDOW
10. PIN MOUNTED LETTERS
11. MANUFACTURED STONE
12. 4'-0" DEEP FROST FOOTING - SEE STRUCT.
13. 4'-0" DEEP FROST FOOTING BEYOND AT STOOP - SEE STRUCT.
14. EXISTING FOOTING
15. SUSPENDED ACOUSTIC CEILING
16. NEW ROOF & STRUCTURE TO TIE INTO EXISTING - PROVIDE EPDM EXPANSION JOINT
17. ARCH & ROOF TO REMAIN
18. 2-HR FIRE WALL
19. ROOF SCUPPER W/ PREFINISHED METAL CONDUCTOR HEAD & DOWNSPOUT
20. ENGINEERED WOOD SIDING & TRIM
21. THIN BRICK
22. LED LIGHT FIXTURE

**TOTAL BUILDING ELEVATIONS 5,179 SF**

| | |
|---|---|
| CLASS 1 MATERIAL 25% | |
| BRICK | 193 SF |
| MANUFACTURED STONE | 301 SF |
| GLASS | 793 SF |
| CLASS 2 MATERIAL 42% | |
| STUCCO | 2,158 SF |
| CLASS 3 MATERIAL 33% | |
| METAL FLASHING | 333 SF |
| ENGINEERED WD SIDING | 1,401 SF |

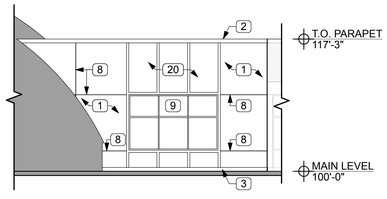


1 A60 SOUTHWEST ELEVATION
SCALE: 1/8" = 1'-0"

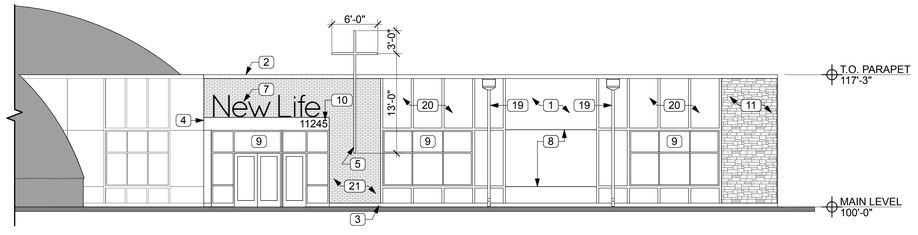


2 A60 SOUTH ELEVATION
SCALE: 1/8" = 1'-0"

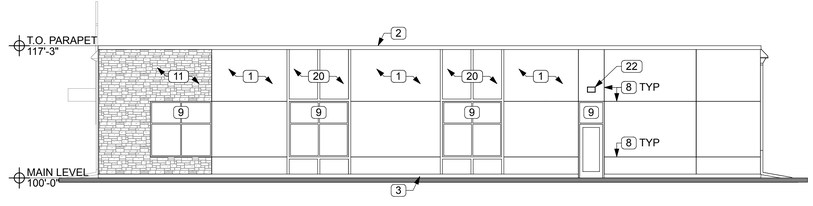


3 A60 EAST ELEVATION
SCALE: 1/8" = 1'-0"

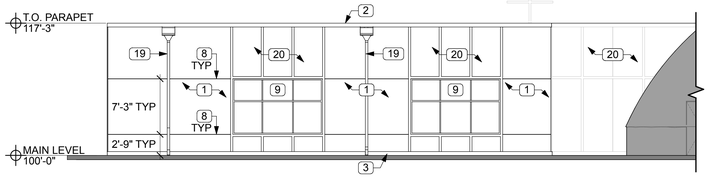


4 A60 NORTH ELEVATION
SCALE: 1/8" = 1'-0"

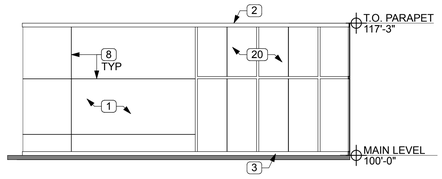


5 A60 WEST ELEVATION
SCALE: 1/8" = 1'-0"

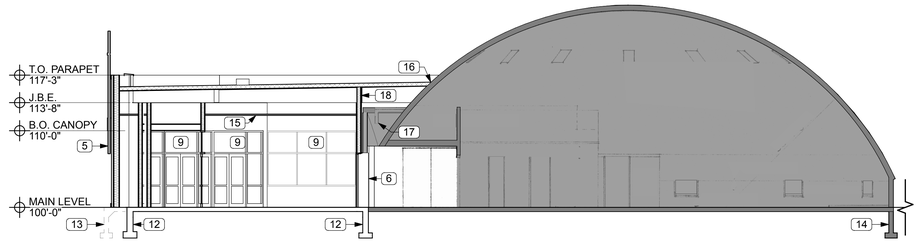


6 A60 DOME SECTION
SCALE: 1/8" = 1'-0"

7 A60 SOUTHEAST PERSPECTIVE - FINAL COLORS TBD
NOT TO SCALE

STATION 19
ARCHITECTS
4181 W BROADWAY AVE, MINNEAPOLIS, MN 55422
612.623.1800 ■ STATION19.COM

**NOT FOR CONSTRUCTION**

I hereby certify that this plan, specification, or report was prepared by me or under my direct supervision and that I am a duly Licensed Architect under the laws of the state of MN.

SIGNATURE:

REGISTRATION #:

DATE: 01.28.2026

# NEW LIFE EFREE CHURCH

11245 POINT DOUGLAS DR S
COTTAGE GROVE MN 55033

PROJECT NO: 4638

DRAWN BY: GT,

COPYRIGHT: 2026

Errors may occur in the transmission of electronic files. Station Nineteen Architects, Inc. is not responsible for any claims, damages or expenses arising out of the unauthorized use of the information contained in electronic files. It is the responsibility of the user to verify all layouts, dimensions and other related information. This document may not be used or copied without prior consent.

| NO | DATE | DESCRIPTION |
|---|---|---|

CITY SUBMITTAL

EXTERIOR ELEVATIONS & BUILDING SECTIONS

**A60**

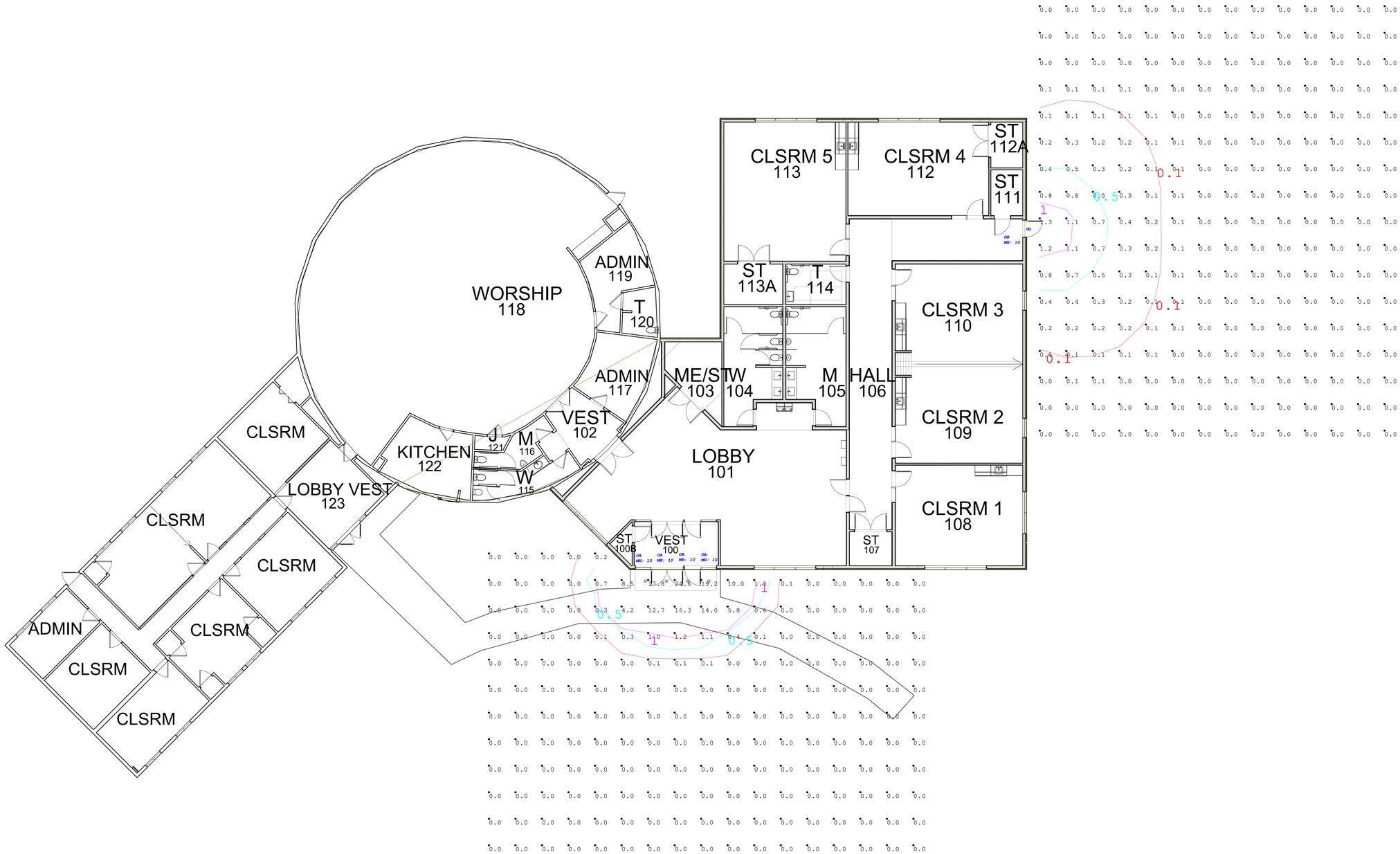


1. Standard Reflectance of 80/50/20 unless noted otherwise
2. Not a Construction Document, for Design purposes only
3. Standard indoor calc points @ 30" A.F.F. unless noted otherwise
4. Standard outdoor calc points @ Grade unless noted otherwise
5. Egress calc points @ 0" A.F.F.
6. Mlazgar Associates assumes no responsibility for installed light levels due to field conditions, etc.

| Calculation Summary | | | | | | | |
|---|---|---|---|---|---|---|---|
| Label | CalcType | Units | Avg | Max | Min | Avg/Min | Max/Min |
| CalcPt EAST | Illuminance | Fc | 0.08 | 1.3 | 0.0 | N.A. | N.A. |
| CalcPts_1 | Illuminance | Fc | 0.73 | 24.6 | 0.0 | N.A. | N.A. |

| Luminaire Schedule | | | | | | | | |
|---|---|---|---|---|---|---|---|---|
| Symbol | Qty | Label | Manufacturer | Description | Arrangement | Lum. Lumens | Lum. Watts | LLF |
| | 4 | OA | | HC610D010-HM60525840-61WDC | Single | 1320 | 9.9 | 0.900 |
| | 1 | OB | | GKO-PB1A-740-U-T4W | Single | 745 | 4.8 | 0.900 |

MLAZGAR ASSOCIATES
10340 VIKING DR.
SUITE 150
EDEN PRAIRIE, MN 55344
(p) 952-943-8080
(f) 952-943-8088
www.mlazgar.com

| # | Date | Comments |
|---|---|---|
| Revisions | | |

RLMA Project #: 181871
Drawn By: BS
Date: 1/6/2026

Scale: 1" = 8'

# PHOTOMETRIC

NEW LIFE EFREE CHURCH
HASTINGS, MN

EXISTING CONDITIONS SURVEY FOR:

# New Life Comm. Church

## DESCRIPTION:

The N1/2 of the N1/2 of the SW1/4 of the NW1/4, subject to highway easement, Sec. 36 T.27 R.21, Washington County, Minnesota.

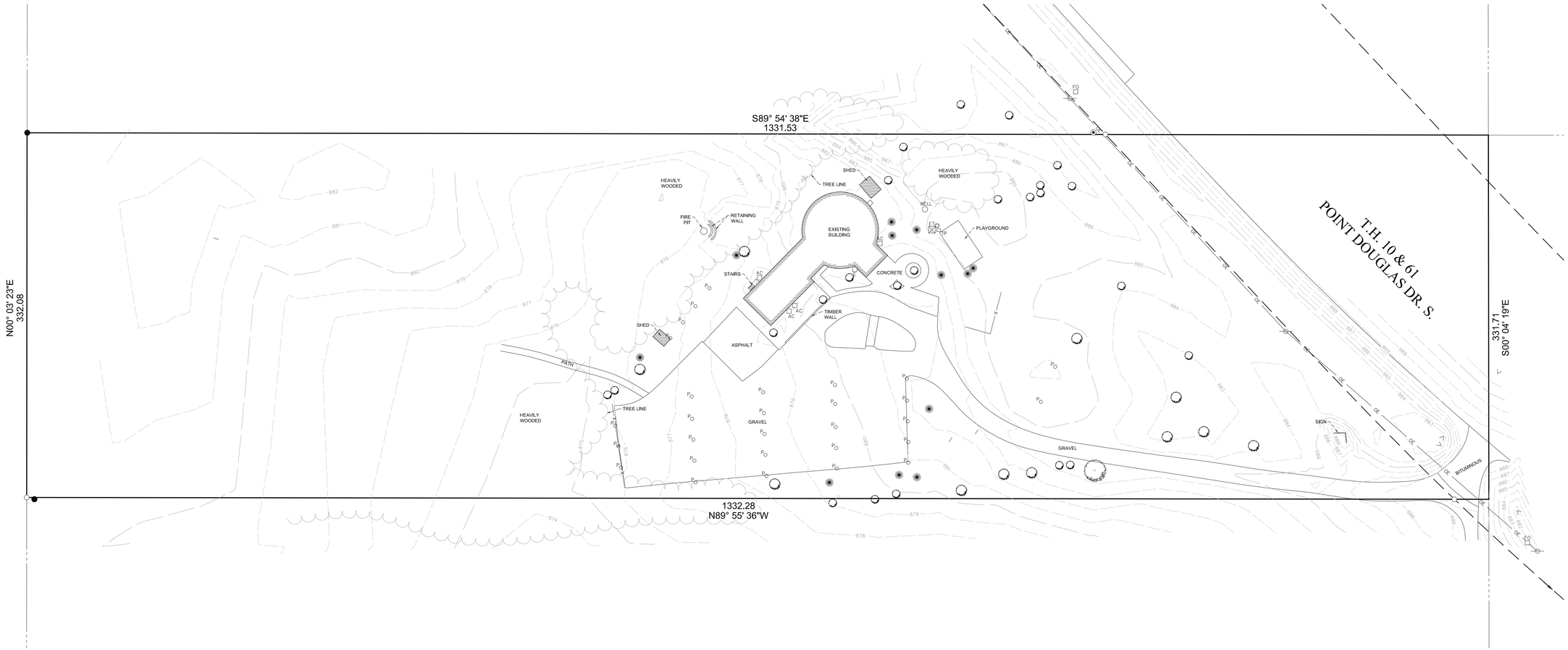


- Iron Monument Found
- Iron Monument Set RLS 21292
- AC Air Conditioner
- ET Transformer
- TP Telephone Box
- E Electric Box
- P Post
- Light Pole
- WELL Catch Basin
- Power Pole
- FO Sanitary Manhole
- FES/Culvert
- Trees

N

50 0 25 50 100

Scale: 1 Inch = 50 Feet


M&P associates
civil engineering · land surveying · site planning
1440 Arcade St. Suite 250
Saint Paul, MN 55106
Phone: 651-768-0112
Fax: 651-776-0206
E-mail: info@mpasso.com


I hereby certify that this survey, plan or report was prepared by me or under my direct supervision and that I am a duly Licensed Professional Surveyor under the laws of the state of Minnesota.

DATE 9/21/21 LIC. NO. 21292

REVISIONS

DATE

OWNER

New Life Comm. Church
11256 POINT DOUGLAS DR. S.
COTTAGE GROVE, MN 55033

EXISTING CONDITIONS

NEW LIFE COMM. CHURCH
COTTAGE GROVE, MN 55033

| DRAWN | CHECKED |
|---|---|
| KGD | ACS |

PROJECT # 5291.001

DATE 9/21/21

SHEET # C1

# Ten Thirty Environmental Solutions

Ten Thirty Environmental Solutions, SBC
1684 132nd Ave NE
Blaine, MN 55448

Regarding Septic Design For Property Located At New Life Evangelical Free Church

November 11, 2025

Please find the enclosed design for the septic system for the property at 11245 Point Douglas Drive South (New Life Evangelical Free Church) in Cottage Grove, Minnesota. This design was completed on November 11, 2025 to be in compliance with local and state requirements. This design does not offer a guarantee that it will be permitted by the local permitting authority, however the design was completed using all the applicable resources and knowledge available at the time of the design that would make it in compliance with local and state rules.

An overview of the septic design for a type I mound is shown below with more details in the enclosed design documents.

- Permit design flow of 2,460 gallons per day (gpd) for a church with up to 600 attenders and 4 FTE on Sundays, 200 attenders and 4 FTE on Wednesdays, 100 attenders and 4 FTE on Thursdays and 15 attenders and 4 FTE Tuesday, Friday and Saturday while being closed on Mondays. With flow EQ average daily design flow is 591 gpd.
    - BOD loading is 0.01 lbs per attender and 0.04 lbs per employee, this equates to 6.2 lbs on Sunday, 2.16 lbs on Wednesday, 1.16 lbs on Thursday, and 0.31 lbs on Tuesday/Friday/Saturday for an average BOD loading of 1.49 lbs per day.
- Flow from the church will be collected in a new 4,200 gallon septic tank followed by another new 4,200 gallon septic tank.
    - The second 4,200 gallon septic tank will have a Polylok 525 effluent filter with an alarm installed on the outlet.
- Flow from the second 4,200 gallon septic tank will then flow into a new 4,200-gallon pump/EQ tank.
- The 4,200-gallon pump tank will **time dose** and center feed a 100’ x 10’ rockbed mound with a 12 inch sand lift (three - 1.5” laterals with 3/16 inch perforations).
    - There will be two pumps in the pump tank and they will alternate doses.
        - An SJE Rhombus C-Level Sensor with EZ Insite control panel is recommended if available for ease of setting and troubleshooting as well as ongoing flow monitoring.
    - The absorption area for the mound will be 100’ x 20’.
    - The pumps will have an elapsed time meter, event counter and alarm installed on them (alarm on a separate circuit than the pump).
- 1.5” laterals are called for to be center fed to keep dose volume down and protect the mounds.
    - **NO** TIMER OVERRIDE MAY BE INSTALLED AS THAT WILL OVERLOAD THE MOUND.
- To protect the mound trees within 10’ of absorption area should be cut down.

- Please read the Site/Soil Narrative on the Elevations Page in the attached design documents for a detailed description of the site and proposed system.
- The well serving the church will be moved as part of the expansion.
- Secondary protection within the manholes are required.
- A hatch is recommended for the pump tank, this must be secured with a padlock to prevent access by children.
- Low flow fixtures are STRONGLY encouraged within the church. Aerators on faucets of 0.5 - 1.0 gpm are recommended. Low flow toilets are also recommended. Examples of these can be found in the last few pages of the design.
- It is recommended to mow the mound at least once per year to help prevent any trees or woody shrubs from growing on it.
- The tanks should be evaluated every 24 months to determine whether or not they need to be pumped.

**Please protect the soil treatment area from all vehicle traffic as such traffic may damage the area and require a system redesign.**

This design does not guarantee the performance of the system, the design is based on available information at the time of the design. In addition in the event the system is not operated in accordance with the management plan the design is not guaranteed.

In order for the system to be installed it must first be permitted by the local regulatory authority. If there are any questions or concerns with the design please do not hesitate to call or email.

Sincerely,

Alex Pepin, Professional Engineer (Lic# 58962) and Advanced Designer (Lic# 4082)
612-248-4281
alex.pepin@tenthirtyenvironmental.com.

# ArcGIS Web Map

11/5/2025, 4:23:17 PM

1:1,500

0 65 130 260 ft

0 20 40 80 m

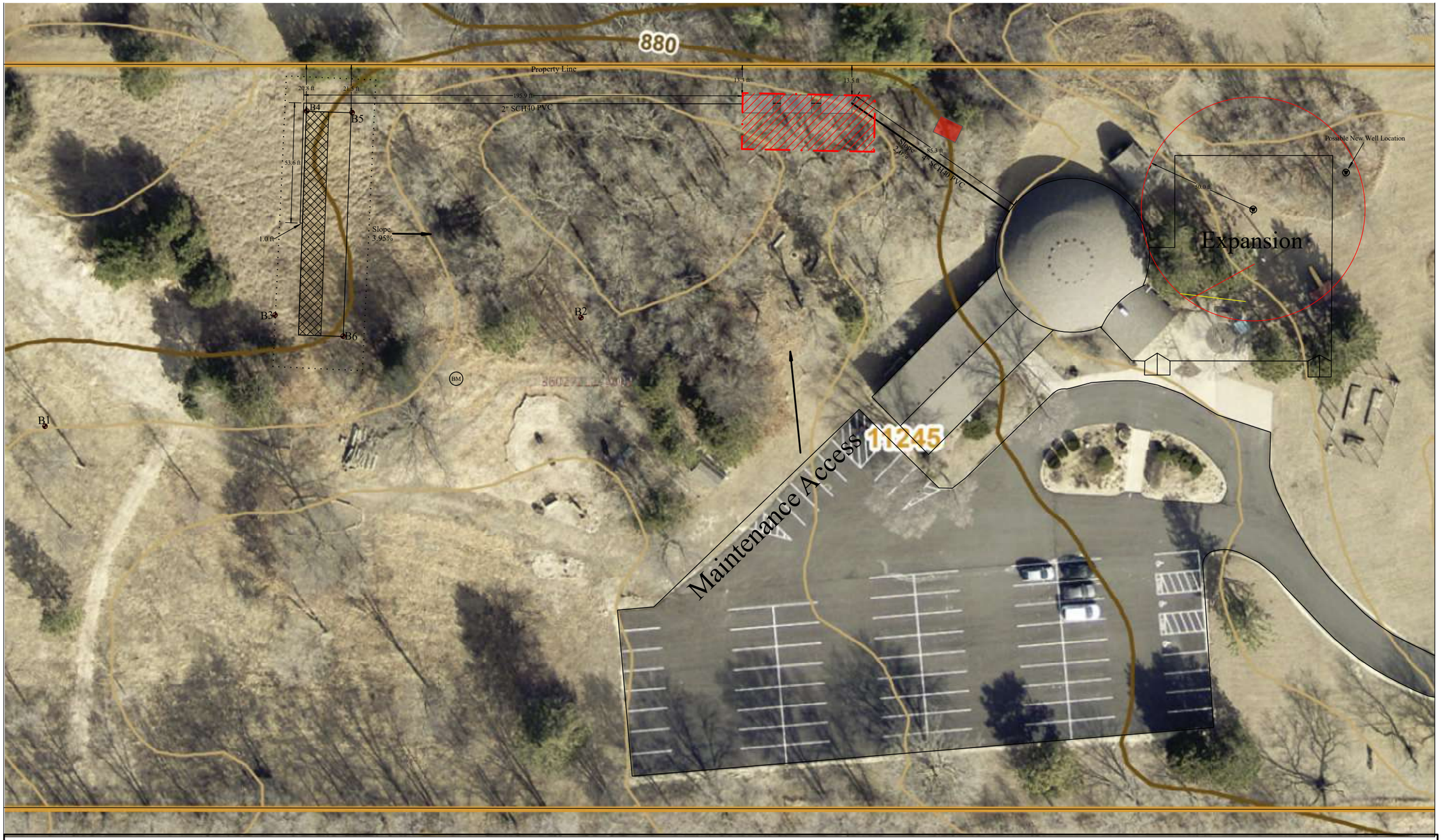


11245 Point Douglas Drive South - Cottage Grove
New Life Evangelical Free Church
Max Daily Flow - (2,460 gpd)
Average Daily Flow - (591 gpd)
Average Daily BOD - 1.49 lbs/day
(Not A Survey)
Design By: Ten Thirty Environmental Solutions

50.0 ft

## Legend

- Soil Observation
- Well
- Benchmark
- Approximate Mound Berming
- Absorption Area
- Rockbed
- New Tank
- Old Tank
- Drainfield
- Electric Line
- Gas Line

Mound Information:
Bottom of Rock - 881.22'
10' x 100' rockbed
20' x 100' absorption area
3.95% Slope
12" Sandlift

Tank Information:
New 4,200 gal septic tank - Inlet - 872.62'
New 4,200 gal septic tank - Inlet - 871.01'
New 4,200 gal pump tank - Inlet - 869.39'

Current first tank inlet - 876.61'

Benchmark - 877.69'

N

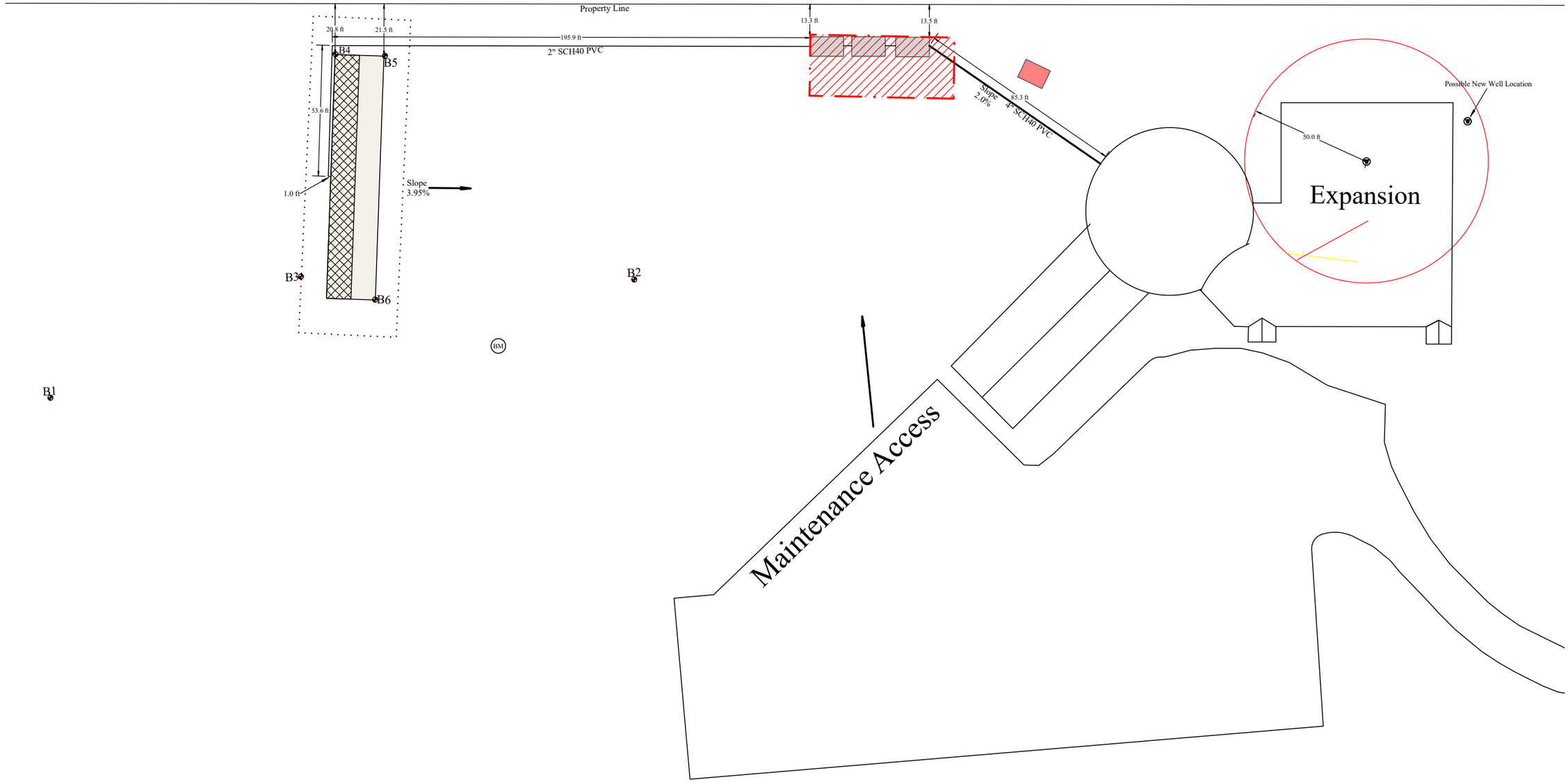


11245 Point Douglas Drive South - Cottage Grove
New Life Evangelical Free Church
Max Daily Flow - (2,460 gpd)
Average Daily Flow - (591 gpd)
Average Daily BOD - 1.49 lbs/day
(Not A Survey)
Design By: Ten Thirty Environmental Solutions

50.0 ft

## Legend

- Soil Observation
- Well
- Benchmark
- Approximate Mound Berming
- Absorption Area
- Rockbed
- New Tank
- Old Tank
- Drainfield
- Electric Line
- Gas Line

Mound Information:
Bottom of Rock - 881.22'
10' x 100' rockbed
20' x 100' absorption area
3.95% Slope
12" Sandlift

Tank Information:
New 4,200 gal septic tank - Inlet - 872.62'
New 4,200 gal septic tank - Inlet - 871.01'
New 4,200 gal pump tank - Inlet - 869.39'

Current first tank inlet - 876.61'

Benchmark - 877.69'

N

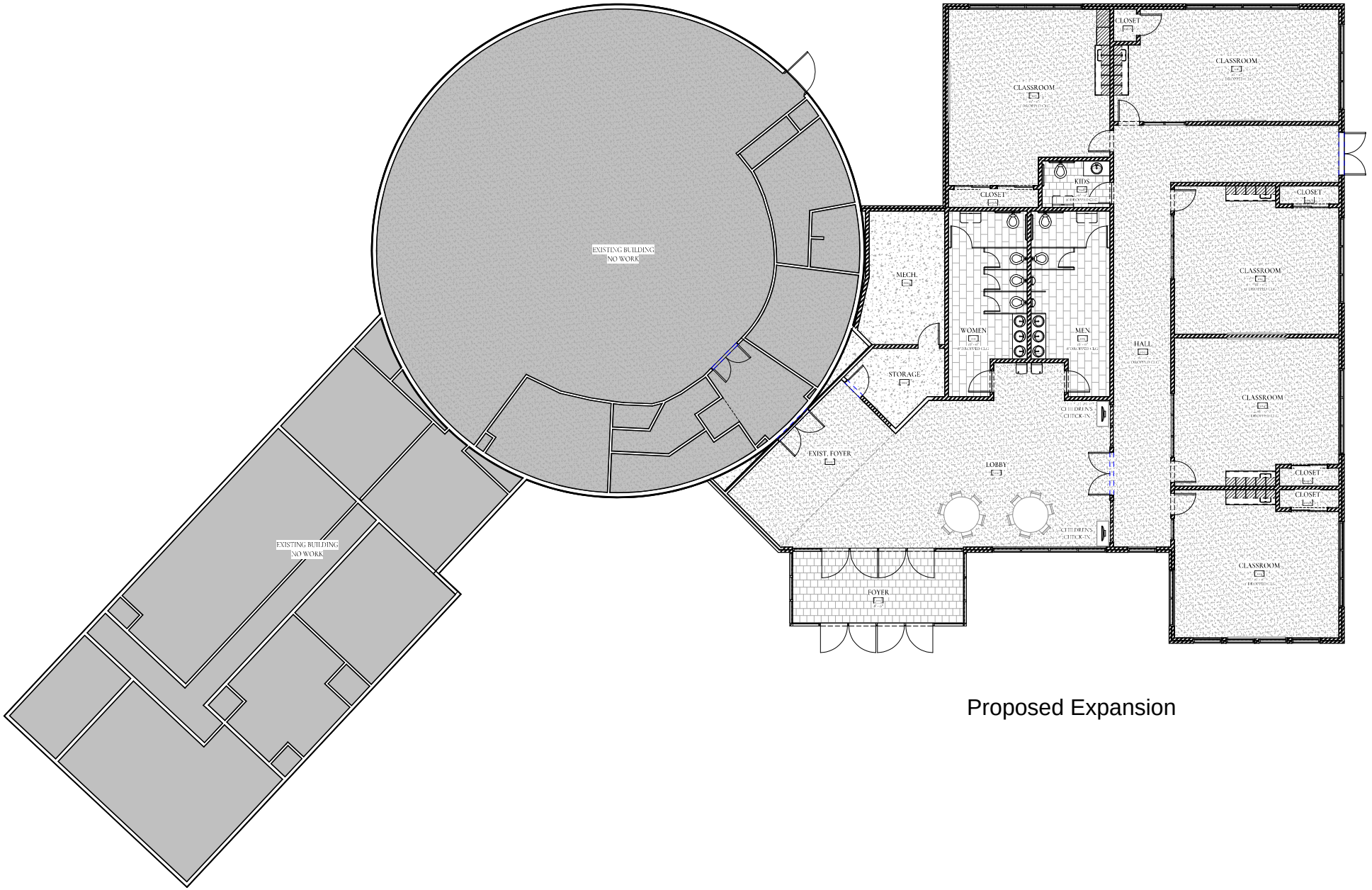


Proposed Expansion

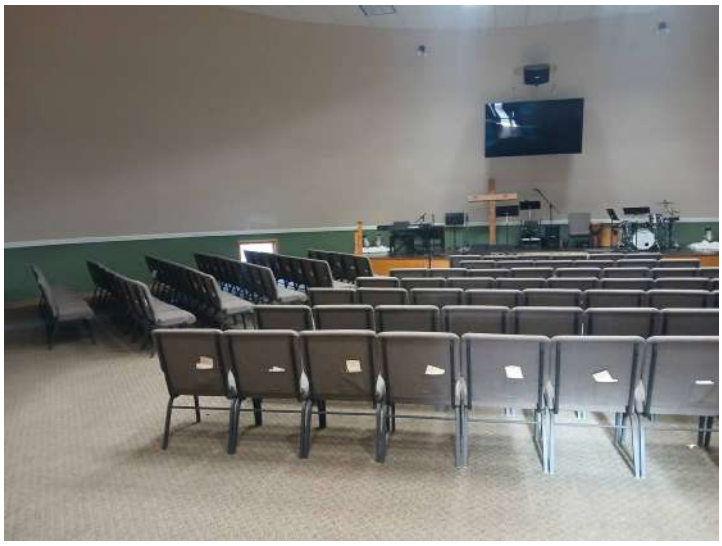

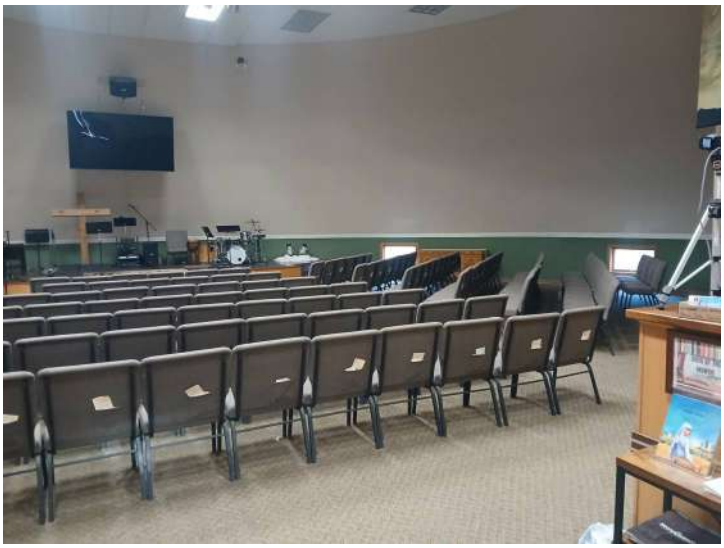

Current sanctuary above (not changing) and kitchen below (not changing)
Kitchen for pot lucks only and staff.

Existing Tank
First Tank Inlet

Existing Tank
Pump Tank Outlet

B4
B5

B5
B4

Benchmark
B6
SW Rockbed Corner

B3
SW Rockbed Corner
B6

## Elevations Worksheet Ten Thirty Environmental Solutions

**Address** 11245 Point Douglas Dr S

| Location | Elevation | Restriction depth (in) | Restriction Elevation | Separation as Designed | Comments |
|---|---|---|---|---|---|
| Grade at B1 | 877.55 | 22 | **875.71** | - | Exploratory boring to SW |
| Grade at B2 | 875.09 | 36 | **872.09** | - | Exploratory boring in low area closer to tanks |
| Grade at B3 | 880.15 | 30 | **877.65** | 3.57 | Near SW rockbed corner |
| Grade at B4 | 880.22 | 41 | **876.81** | 4.42 | NW rockbed corner |
| Grade at B5 | 879.13 | 36 | **876.13** | 5.09 | NE absorption corner |
| Grade at B6 | 879.39 | 31 | **876.81** | 4.41 | SE absorption corner |
| Grade at SW rockbed corner | 879.88 | | | | SW rockbed corner |
| Grade at current septic tank | 878.86 | | | | |
| Inlet at current septic tank | 876.61 | | | | |
| Grade at first new septic tank | 877.37 | | | | All tanks 37.5" to top of tank. |
| Inlet at first new septic tank | 872.62 | | | | No buoyancy issues at depth designed. |
| Grade at new second septic tank | 875.76 | | | | Duplex alternating pumps in pump tank. Hatch recommended for ease of maintenance and access. |
| Inlet at new second septic tank | 871.01 | | | | |
| Grade at proposed new pump tank/EQ tank | 874.14 | | | | |
| Inlet at new pump tank/EQ tank | 869.39 | | | | Static Head |
| Top of Pump (For 12" pump + 2" pad) | 864.89 | | | | 16.83 |

| Benchmark | Elevation |
|---|---|
| Top of footing for elevated playhouse (NW corner) | 877.69 |

| Soil Treatment Area Type | Max Grade | Bottom of Rock |
|---|---|---|
| Mound | **880.22** | ***881.22*** |

**Overall Separation As Designed**

3.57

**Measured Slope**

| 0.34% | 3.95% |
|---|---|
| **Slope N to S (top of rock)** | **Avg Slope W to E** |

## *Soil/Site Narrative*

Soil observations completed using a shovel/post hole digger pit down to ~2' and borings after that if necessary. All observations conducted in a manner that allows for the evaluation of soil structures.

Church is expanding to add some additional Sunday school classrooms and bathrooms. Currently 200 seats in sanctuary, will add 5 new classrooms (total square footage of classrooms = 2986 square feet) with allowable 1 child per 35 square feet for daycare rules this works out to a max of 85 children in this space. Rounding up we will say up to 300 people each service for a total of 600 per Sunday (currently 100-150 per service with about 100 kids, so tripling size). For youth group on Wednesdays say 200 people (currently about 60). Also allow for another day for people to use the classrooms for something, say 100 people. The other three days will have up to 10 visitors per day. Six days per week (Sun, Tu, Wed, Th, Fr, Sat) there will be 4 FTE. For churches design guidance says 4 gal/seat or person and 0.01 lbs of BOD per person. Design guidance also says 15 gpd per employee and 0.04 lbs of BOD per employee. This works out the following flow and waste strength profile. Sun - 2,460 gpd, 6.2 lbs BOD; Mon - closed, Tu - 120 gpd, 0.31 lbs BOD; Wed - 860 gpd, 2.16 lbs BOD; Th - 460 gpd, 1.16 lbs BOD, Fri - 120 gpd, 0.31 lbs BOD; Sat - 120 gpd, 0.31 lbs BOD. Using flow equalization this works out to an average flow of 591 gpd and 1.49 lbs of BOD per day. Organic loading is the limiting factor (1.49/0.0017 = 874.8 required square feet in sand). Upsizing 15% this works out to 1,000 square feet required. With a mound called for this works out to a 100' x 10' mound rockbed. There is a small pot luck kitchen in the church (see pictures) this is only for potlucks and will not be used to make meals for the church only to heat up food and put things together prepared elsewhere. Commercial kitchens require additional things the church does not desire to undertake. It should also be noted that above 299 seats fire suppression would be required, so they will always stay under that number.

The soils are fine sand consistently over the entire site with redox seen from 22" to 41". As a result the area proposed is the best area for a mound and is also straightforward for pumping from the tanks.

The entire site had darker soils down to around 30" in many borings (10YR3/3) with B3 being the exception, however the 4/4 colored soils were encountered in B5 down deeper as well so the soils consistently fine sand with roots down to about 3' (10YR6/3). As a result of redox seen where it is a mound with a 12" sand lift is called for.

The mound is not exactly the same elevation across the rockbed, there is a 0.34% slope from N to S, however this is well under the required 1% to be on contour. It should be noted in estimating material costs that some additional material will be needed as the NW corner is the highest and as a result there will be more than 12" of sand at the SW corner under the rock.

# Preliminary Evaluation Worksheet

## 1. Contact Information

v 04.07.2025

| | | | |
|---|---|---|---|
| Property Owner/Client: | New Life Community Church | Date Completed: | 11/11/2025 |
| Site Address: | 11245 Point Douglas Drive S, Cottage Grove, MN 55033 | Project ID: | 11245PO |
| Email: | bcmyre@hotmail.com (Ben Myre) | Phone: | 651-558-6433 |
| Mailing Address: | | Alt Phone: | |
| Legal Description: | | | |
| Parcel ID: | 3602721230002 | SEC: | |
| TWP: | | RNG: | |

## 2. Flow and General System Information

### A. Client-Provided Information

Project Type: ☐ New Construction ☐ Replacement ☐ Expansion ☐ Repair

Project Use: ☐ Residential ☒ Other Establishment: Church

**Residential use:** # Bedrooms: | Dwelling sq.ft.: | Unfinished sq.ft.:

# Adults: | # Children: | # Teenagers:

In-home business (Y/N): | If yes, describe:

Water-using devices: *(check all that apply)*

- ☐ Garbage Disposal/Grinder
- ☐ Dishwasher
- ☐ Hot Tub*
- ☐ Sewage pump in basement
- ☐ Water Softener*
- ☐ Sump Pump*
- ☐ Large Bathtub >40 gallons
- ☐ Iron Filter*
- ☐ Self-Cleaning Humidifier*
- ☐ Clothes Washing Machine
- ☒ High Eff. Furnace*
- ☐ Other:

* Clear water source - should not go into system

Additional current or future uses: Max capacity is 299 b4 fire suppression required (so no)

Anticipated non-domestic waste: None - If add iron filter must divert reject water out of septic

***The above is complete & accurate:*** *Client signature & date*

### B. Designer-determined Flow and Anticipated Waste Strength Information

*Attach additional information as necessary.*

Design Flow: 591 GPD Anticipated Waste Type: Other Est. - At-Risk

Maximum Concentration BOD: 247 mg/L TSS <60 mg/L Oil & Grease <25 mg/L

## 3. Preliminary Site Information

### A. Water Supply Wells

| # | Description | Mn. ID# | Well Depth (ft.) | Casing Depth (ft.) | Confining Layer | STA Setback | Source |
|---|---|---|---|---|---|---|---|
| 1 | Unknown well | none | ? | ? | | >100' | |
| 2 | | | | | | | |
| 3 | | | | | | | |
| 4 | | | | | | | |

Additional Well Information:

# Preliminary Evaluation Worksheet

| | | | |
|---|---|---|---|
| Site within 200' of noncommunity transient well (Y/N) | No | Yes, source: | |
| Site within a drinking water supply management area (Y/N) | No | Yes, source: | |
| Site in Well Head Protection inner wellhead management zone (Y/N) | No | Yes, source: | |
| Buried water supply pipes within 50 ft of proposed system (Y/N) | No | | |

Water Supply Pipe Comments:

**B. Site located in a shoreland district/area?** No — Yes, name: N/A

Elevation of ordinary high water level: N/A ft — Source: N/A

Classification: N/A — Tank Setback: N/A ft. — STA Setback: N/A ft.

**C. Site located in a floodplain?** No — Yes, Type(s): N/A

Floodplain designation/elevation (10 Year): N/A ft — Source: N/A

Floodplain designation/elevation (100 Year): N/A ft — Source: N/A

**D. Property Line Id / Source:** ☐ Owner ☐ Survey ☒ County GIS ☐ Plat Map ☐ Other

**E. ID distance of relevant setbacks on map:** ☐ Water ☐ Easements ☐ Well(s) ☒ Building(s) ☒ Property Lines ☐ OHWL ☐ Other:

## 4. Preliminary Soil Profile Information From Web Soil Survey (attach map & description)

Map Units: 8B - Sparta Loamy Sand — Slope Range: 2-6 %

List landforms: See enclosed map unit description

Landform position(s):

Parent materials:

Depth to Bedrock/Restrictive Feature: in — Depth to Watertable: in

Map Unit Ratings

Septic Tank Absorption Field- At-grade:

Septic Tank Absorption Field- Mound:

Septic Tank Absorption Field- Trench:

## 5. Local Government Unit Information

Name of LGU: Washington County

LGU Contact:

LGU-specific setbacks:

LGU-specific design requirements:

LGU-specific installation requirements:

Notes:

# Field Evaluation Worksheet

ONSITE SEWAGE TREATMENT PROGRAM

MINNESOTA POLLUTION CONTROL AGENCY

## 1. Project Information

v 04.07.2025

| | | | |
|---|---|---|---|
| **Property Owner/Client:** | New Life Community Church | Project ID: | 11245PO |
| Site Address: | 11245 Point Douglas Drive S, Cottage Grove, MN 55033 | Date Completed: | 11/11/2025 |

## 2. Utility and Structure Information

Utility Locations Identified ☒ Gopher State One Call # see site plan ☐ Any Private Utilities:

Locate and Verify (*see Site Evaluation map* ) ☒ Existing Buildings ☒ Improvements ☐ Easements ☐ Setbacks

## 3. Site Information

| | | | | | |
|---|---|---|---|---|---|
| Vegetation type(s): | Grass | | | Landscape position: | Back/ Side Slope |
| Percent slope: | 4.0 % | Slope shape: | Linear, Convex | Slope direction: | East |

Describe the flooding or run-on potential of site: None

Describe the need for Type III or Type IV system: N/A

Note:

Proposed soil treatment area protected? (Y/N): Yes If yes, describe: Staked out

## 4. General Soils Information

Filled, Compacted, Disturbed areas (Y/N): No

If yes, describe:

Soil observations were conducted in the proposed system location (Y/N): Yes

A soil observation in the most limiting area of the proposed system (Y/N): Yes

Number of soil observations: 6 Soil observation logs attached (Y/N): Yes

Percolation tests performed & attached (Y/N):

## 5. Phase I. Reporting Information

| | Depth | | Elevation | | |
|---|---|---|---|---|---|
| **Limiting Condition*:** | 30 | in | **877.65** | ft | **Most Restrictive Depth Identified from List Below* |
| Periodically saturated soil: | 30 | in | 877.65 | ft | Soil Texture: Fine Sand |
| Standing water: | - | in | | ft | Percolation Rate: min/inch |
| Bedrock: | - | in | | ft | Soil Hyd Loading Rate: 0.60 gpd/sq.ft |

Benchmark Elevation: 877.7 ft Elevations and Benchmark on map? (Y/N): Yes

Benchmark Elevation Location: Footing for NW corner of raised play house

Differences between soil survey and field evaluation: fine sand vs medium sand

Site evaluation issues / comments: None

Anticipated construction issues: Big tank holes for large tanks in sandy soils.

# Soil Observation Log

Project ID: 11245PO v 04.07.2025

| | | | |
|---|---|---|---|
| Client: | New Life Community Church | Location / Address: | 11245 Point Douglas Drive S, Cottage Grove, MN 55033 |

Soil parent material(s): (Check all that apply) ☑ Outwash ☐ Lacustrine ☐ Loess ☐ Till ☐ Alluvium ☐ Bedrock ☐ Organic Matter ☐ Disturbed/Fill

| | | | | | | | |
|---|---|---|---|---|---|---|---|
| Landscape Position: | Back/Side Slope | Slope %: | 4.0 | Slope shape: | Linear, Linear | Flooding/Run-On potential: | No |
| Vegetation: | Grass | Soil survey map units: | 8B - Sparta Loamy Sand | | | Surface Elevation-Relative to benchmark: | 877.55 |
| Date/Time of Day/Weather Conditions: | | 11/11/2025 | 10:00AM | Sunny | | Limiting Layer Elevation: | 875.71 |
| **Observation #/Type/Location:** | | B1 | See site map | Shovel and auger | | Depth to Standing Water-inches: | - |

| Depth (in) | Texture | Rock Frag. % | Matrix Color(s) | | Mottle Color(s) | | Redox Kind(s) | Indicator(s) | I-------- Structure----------I | | |
|---|---|---|---|---|---|---|---|---|---|---|---|
| | | | | | | | | | Shape | Grade | Consistence |
| 0-17 | Loamy fine sand | <5% | 10YR | 3/2 | | | | | Single grain | Structureless | Loose |
| 17-22 | Fine sandy loam | <5% | 10YR | 3/2 | | | | | Granular | Weak | Friable |
| 22-30 | Fine sandy loam | <5% | 10YR | 3/3 | 10YR | 5/3 | Depletions | S2 | Blocky | Weak | Friable |
| 30-33 | Fine sandy loam | <5% | 10YR | 3/4 | 10YR | 4/4 | Concentrations | S2 | Blocky | Weak | Friable |
| | | | | | 10YR | 5/3 | Depletions | | | | |
| | | | | | | | | | | | |
| | | | | | | | | | | | |
| | | | | | | | | | | | |

Comments: Root channels to about 2' (10YR6/3, not redox). Redox at 22".

I hereby certify that I have completed this work in accordance with all applicable ordinances, rules and laws.

| Alex Pepin | | 4082 | 11/11/2025 |
|---|---|---|---|
| (Designer/Inspector) | (Signature) | (License #) | (Date) |

# Soil Observation Log

Project ID: 11245PO v 04.07.2025

| | | | |
|---|---|---|---|
| Client: | New Life Community Church | Location / Address: | 11245 Point Douglas Drive S, Cottage Grove, MN 55033 |

Soil parent material(s): (Check all that apply) ☑ Outwash ☐ Lacustrine ☐ Loess ☐ Till ☐ Alluvium ☐ Bedrock ☐ Organic Matter ☐ Disturbed/Fill

| | | | | | | | |
|---|---|---|---|---|---|---|---|
| Landscape Position: | Back/Side Slope | Slope %: | 1.0 | Slope shape: | Linear, Linear | Flooding/Run-On potential: | No |
| Vegetation: | Forest | Soil survey map units: | 8B - Sparta Loamy Sand | | | Surface Elevation-Relative to benchmark: | 875.09 |
| Date/Time of Day/Weather Conditions: | | 11/11/2025 | 10:00AM | Sunny | | Limiting Layer Elevation: | 872.09 |
| **Observation #/Type/Location:** | | B2 | See site map | Shovel and auger | | Depth to Standing Water-inches: | - |

| Depth (in) | Texture | Rock Frag. % | Matrix Color(s) | Mottle Color(s) | Redox Kind(s) | Indicator(s) | Structure Shape | Structure Grade | Structure Consistence |
|---|---|---|---|---|---|---|---|---|---|
| 0-17 | Fine Sand | <5% | 10YR 3/2 | | | | Single grain | Structureless | Loose |
| 17-32 | Fine Sand | <5% | 10YR 3/3 | | | | Single grain | Structureless | Loose |
| 32-36 | Fine Sand | <5% | 10YR 4/3 | | | | Single grain | Structureless | Loose |
| 36-42 | Fine Sand | <5% | 10YR 4/3 | 10YR 4/6 | Concentrations | S2 | Single grain | Structureless | Loose |
| | | | | 10YR 6/3 | Depletions | | | | |
| | | | | | | | | | |
| | | | | | | | | | |
| | | | | | | | | | |

Comments: Root channels to about 3' (10YR6/3, not redox). Redox at 36".

I hereby certify that I have completed this work in accordance with all applicable ordinances, rules and laws.

| Alex Pepin | | 4082 | 11/11/2025 |
|---|---|---|---|
| (Designer/Inspector) | (Signature) | (License #) | (Date) |

# Soil Observation Log

Project ID: 11245PO v 04.07.2025

| | | | |
|---|---|---|---|
| Client: | New Life Community Church | Location / Address: | 11245 Point Douglas Drive S, Cottage Grove, MN 55033 |

Soil parent material(s): (Check all that apply) ☑ Outwash ☐ Lacustrine ☐ Loess ☐ Till ☐ Alluvium ☐ Bedrock ☐ Organic Matter ☐ Disturbed/Fill

| | | | | | | | |
|---|---|---|---|---|---|---|---|
| Landscape Position: | Back/Side Slope | Slope %: | 4.0 | Slope shape: | Linear, Linear | Flooding/Run-On potential: | No |
| Vegetation: | Grass | Soil survey map units: | 8B - Sparta Loamy Sand | | | Surface Elevation-Relative to benchmark: | 880.15 |
| Date/Time of Day/Weather Conditions: | | 11/11/2025 | 11:00AM | Sunny | | Limiting Layer Elevation: | 877.65 |
| **Observation #/Type/Location:** | | B3 | See site map | Shovel and auger | | Depth to Standing Water-inches: | - |

| Depth (in) | Texture | Rock Frag. % | Matrix Color(s) | | Mottle Color(s) | | Redox Kind(s) | Indicator(s) | I-------- Structure----------I | | |
|---|---|---|---|---|---|---|---|---|---|---|---|
| | | | | | | | | | Shape | Grade | Consistence |
| 0-12 | Fine Sand | <5% | 10YR | 3/3 | | | | | Single grain | Structureless | Loose |
| 12-30 | Fine Sand | <5% | 10YR | 4/3 | | | | | Single grain | Structureless | Loose |
| 30-36 | Fine Sand | <5% | 10YR | 4/4 | 10YR | 4/6 | Concentrations | S2 | Single grain | Structureless | Loose |
| | | | | | 10YR | 6/3 | Depletions | | | | |
| | | | | | | | | | | | |
| | | | | | | | | | | | |
| | | | | | | | | | | | |
| | | | | | | | | | | | |

Comments: Root channels to about 3' (10YR6/3, not redox). Redox at 30".

I hereby certify that I have completed this work in accordance with all applicable ordinances, rules and laws.

| Alex Pepin | | 4082 | 11/11/2025 |
|---|---|---|---|
| (Designer/Inspector) | (Signature) | (License #) | (Date) |

B3 - redox at 30” (right)

# Soil Observation Log

Project ID: 11245PO v 04.07.2025

| | | | |
|---|---|---|---|
| Client: | New Life Community Church | Location / Address: | 11245 Point Douglas Drive S, Cottage Grove, MN 55033 |

Soil parent material(s): (Check all that apply) ☑ Outwash ☐ Lacustrine ☐ Loess ☐ Till ☐ Alluvium ☐ Bedrock ☐ Organic Matter ☐ Disturbed/Fill

| | | | | | |
|---|---|---|---|---|---|
| Landscape Position: | Back/Side Slope | Slope %: | 4.0 | Slope shape: | Linear, Linear |
| Flooding/Run-On potential: | No | | | | |
| Vegetation: | Grass | Soil survey map units: | 8B - Sparta Loamy Sand | Surface Elevation-Relative to benchmark: | 880.22 |
| Date/Time of Day/Weather Conditions: | 11/11/2025 | 11:30AM | Sunny | Limiting Layer Elevation: | 876.81 |
| **Observation #/Type/Location:** | B4 | See site map | Shovel and auger | Depth to Standing Water-inches: | - |

| Depth (in) | Texture | Rock Frag. % | Matrix Color(s) | Mottle Color(s) | Redox Kind(s) | Indicator(s) | I-------- Structure----------I Shape | Grade | Consistence |
|---|---|---|---|---|---|---|---|---|---|
| 0-12 | Fine Sand | <5% | 10YR 3/2 | | | | Single grain | Structureless | Loose |
| 12-35 | Fine Sand | <5% | 10YR 3/3 | | | | Single grain | Structureless | Loose |
| 35-41 | Fine Sand | <5% | 10YR 4/3 | | | | Single grain | Structureless | Loose |
| 41-47 | Fine Sand | <5% | 10YR 4/3 | 10YR 4/6<br>10YR 6/3 | Concentrations<br>Depletions | S2 | Single grain | Structureless | Loose |
| | | | | | | | | | |
| | | | | | | | | | |
| | | | | | | | | | |

Comments: Root channels to about 3' (10YR6/3, not redox). Redox at 41".

I hereby certify that I have completed this work in accordance with all applicable ordinances, rules and laws.

| Alex Pepin | | 4082 | 11/11/2025 |
|---|---|---|---|
| (Designer/Inspector) | (Signature) | (License #) | (Date) |

B4 - redox at 41” (right).

# Soil Observation Log

Project ID: 11245PO v 04.07.2025

| | | | |
|---|---|---|---|
| Client: | New Life Community Church | Location / Address: | 11245 Point Douglas Drive S, Cottage Grove, MN 55033 |

Soil parent material(s): (Check all that apply) ☑ Outwash ☐ Lacustrine ☐ Loess ☐ Till ☐ Alluvium ☐ Bedrock ☐ Organic Matter ☐ Disturbed/Fill

| | | | | | | | |
|---|---|---|---|---|---|---|---|
| Landscape Position: | Back/Side Slope | Slope %: | 4.0 | Slope shape: | Linear, Linear | Flooding/Run-On potential: | No |
| Vegetation: | Grass | Soil survey map units: | 8B - Sparta Loamy Sand | | | Surface Elevation-Relative to benchmark: | 879.13 |
| Date/Time of Day/Weather Conditions: | | 11/11/2025 | 12:00PM | Sunny | | Limiting Layer Elevation: | 876.13 |
| **Observation #/Type/Location:** | | B5 | See site map | Shovel and auger | | Depth to Standing Water-inches: | - |

| Depth (in) | Texture | Rock Frag. % | Matrix Color(s) | Mottle Color(s) | Redox Kind(s) | Indicator(s) | Structure Shape | Structure Grade | Structure Consistence |
|---|---|---|---|---|---|---|---|---|---|
| 0-6 | Fine Sand | <5% | 10YR 3/2 | | | | Single grain | Structureless | Loose |
| 6-28 | Fine Sand | <5% | 10YR 3/3 | | | | Single grain | Structureless | Loose |
| 28-36 | Fine Sand | <5% | 10YR 4/3 | | | | Single grain | Structureless | Loose |
| 36-42 | Fine Sand | <5% | 10YR 4/4 | 10YR 4/6 | Concentrations | S2 | Single grain | Structureless | Loose |
| | | | | 10YR 6/3 | Depletions | | | | |
| | | | | | | | | | |
| | | | | | | | | | |
| | | | | | | | | | |

Comments: Root channels to about 3' (10YR6/3, not redox). Redox at 36".

I hereby certify that I have completed this work in accordance with all applicable ordinances, rules and laws.

| Alex Pepin | | 4082 | 11/11/2025 |
|---|---|---|---|
| (Designer/Inspector) | (Signature) | (License #) | (Date) |

B5 - redox at 36” (right).

# Soil Observation Log

Project ID: 11245PO v 04.07.2025

| | | | |
|---|---|---|---|
| Client: | New Life Community Church | Location / Address: | 11245 Point Douglas Drive S, Cottage Grove, MN 55033 |

Soil parent material(s): (Check all that apply) ☑ Outwash ☐ Lacustrine ☐ Loess ☐ Till ☐ Alluvium ☐ Bedrock ☐ Organic Matter ☐ Disturbed/Fill

| | | | | | |
|---|---|---|---|---|---|
| Landscape Position: | Back/Side Slope | Slope %: | 4.0 | Slope shape: | Linear, Linear |
| Flooding/Run-On potential: | No | | | | |
| Vegetation: | Grass | Soil survey map units: | 8B - Sparta Loamy Sand | Surface Elevation-Relative to benchmark: | 879.39 |
| Date/Time of Day/Weather Conditions: | 11/11/2025 | 12:30PM | Sunny | Limiting Layer Elevation: | 876.81 |
| **Observation #/Type/Location:** | B6 | See site map | Shovel and auger | Depth to Standing Water-inches: | - |

| Depth (in) | Texture | Rock Frag. % | Matrix Color(s) | Mottle Color(s) | Redox Kind(s) | Indicator(s) | I-------- Structure----------I Shape | Grade | Consistence |
|---|---|---|---|---|---|---|---|---|---|
| 0-7 | Fine Sand | <5% | 10YR 3/2 | | | | Single grain | Structureless | Loose |
| 7-16 | Fine Sand | <5% | 10YR 3/3 | | | | Single grain | Structureless | Loose |
| 16-31 | Fine Sand | <5% | 10YR 4/3 | | | | Single grain | Structureless | Loose |
| 31-37 | Fine Sand | <5% | 10YR 4/3 | 10YR 4/6<br>10YR 6/3 | Concentrations<br>Depletions | S2 | Single grain | Structureless | Loose |
| | | | | | | | | | |
| | | | | | | | | | |
| | | | | | | | | | |

Comments: Root channels to about 3' (10YR6/3, not redox). Redox at 31".

I hereby certify that I have completed this work in accordance with all applicable ordinances, rules and laws.

| Alex Pepin | | 4082 | 11/11/2025 |
|---|---|---|---|
| (Designer/Inspector) | (Signature) | (License #) | (Date) |

B6 - redox at 31” (right)

| Textures: | |
|---|---|
| C | Clay |
| SiC | Silty Clay |
| SC | Sandy Clay |
| CL | Clay Loam |
| SiCL | Silty Clay Loam |
| SCL | Sandy Clay Loam |
| Si | Silt |
| SiL | Silt Loam |
| L | Loam |
| SL | Sandy Loam* |
| LS | Loamy Sand* |
| S | Sand* |

| *Sand Modifiers: | |
|---|---|
| Co | Coarse |
| M | Medium |
| F | Fine |
| VF | Very Fine |

**Topsoil Indicator(s) of Saturation:**

T1. Wetland Vegetation
T2. Depressional Landscape
T3. Organic texture or organic modifiers
T4. N 2.5/ 0 color
T5. Redox features in topsoil
T6. Hydric indicators

**Subsoil Indicator(s) of Saturation:**

S1. Depleted matrix (value >/=4 and chroma </=2)
S2. Distinct gray or red redox features (any Matrix Hue)
S3. Matrix Hue of 5Y with a chroma </= 3
S4. Matrix Hue of 7.5 YR or redder with faint redox concentrations or redox depletions

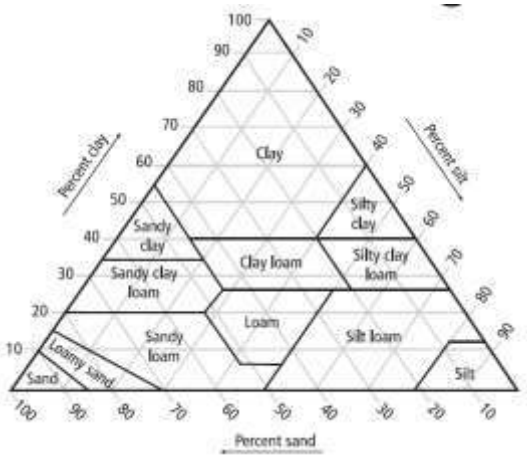


**Shape:**

| | |
|---|---|
| Granular | The peds are approximately spherical or polyhedral and are commonly found in topsoil. These are the small, rounded peds that hang onto roots when soil is turned over. |
| Platy | The peds are flat and plate like. They are oriented horizontally and are usually overlapping. Platy structure is commonly found in forested areas just below the leaf litter or shallow topsoil. |
| Blocky | The peds are block-like or polyhedral, and are bounded by flat or slightly rounded surface that are castings of the faces of surrounding peds. Blocky structure is commonly found in the lower topsoil and subsoil. |
| Prismatic | Flat or slightly rounded vertical faces bound the individual peds. Peds are distinctly longer vertically, and faces are typically casts or molds of adjoining peds. Prismatic structure is commonly found in the lower subsoil. |
| Single Grain | The structure found in a sandy soil. The individual particles are not held together. |

**Grade:**

| | |
|---|---|
| Loose | No peds, sandy soil |
| Weak | Poorly formed, indistinct peds, barely observable in place |
| Moderate | Well formed, distinct peds, moderately durable and evident, but not distinct in undisturbed soil |
| Strong | Durable peds that are quite evident in un-displaced soil, adhere weakly to one another, withstand displacement, and become separated when soil is disturbed |
| Massive | No observable aggregates, or no orderly arrangement of natural lines of weakness |

**Consistence:**

| | |
|---|---|
| Loose | Intact specimen not available |
| Friable | Slight force between fingers |
| Firm | Moderate force between fingers |
| Extremely Firm | Moderate force between hands or slight foot pressure |
| Rigid | Foot pressure |

**Landscape Position:**

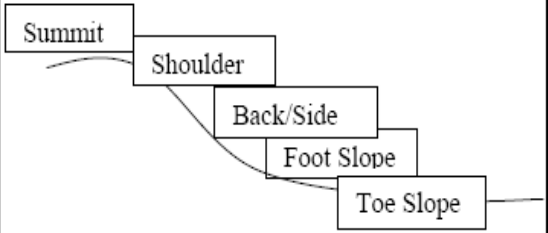


**Slope Shape:**

Slope shape is described in two directions:
up and down slope (perpendicular to the contour),
and across slope (along the horizontal contour);
e.g. Linear, Convex or LV'.

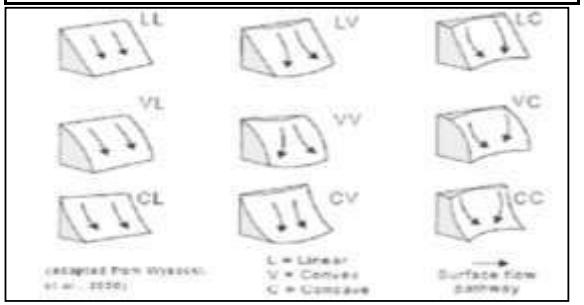

ONSITE SEWAGE TREATMENT PROGRAM

# Design Summary Page

MINNESOTA POLLUTION CONTROL AGENCY

## 1. PROJECT INFORMATION

v 04.07.2025

| | | | |
|---|---|---|---|
| Property Owner/Client: | New Life Community Church | Project ID: | 11245PO |
| Site Address: | 11245 Point Douglas Drive S, Cottage Grove, MN 55033 | Date: | 11/11/25 |
| Email Address: | bcmyre@hotmail.com (Ben Myre) | Phone: | 651-558-6433 |

## 2. DESIGN FLOW & WASTE STRENGTH

Design Flow: 591 GPD  Anticipated Waste Type: Other Est. - At-Risk

BOD: 247 mg/L  TSS: <60 mg/L  Oil & Grease: <25 mg/L

Treatment Level: C  ***Select Treatment Level C for residential septic tank effluent***

## 3. HOLDING TANK SIZING

*Holding Tank Sizing: see 7080.2290*

*Code Minimum* **Holding Tank** Capacity: _____ Gallons with _____ Tanks or Compartments

*Recommended* **Holding Tank** Capacity: _____ Gallons with _____ Tanks or Compartments

The holding tank(s) will be: _____ *Existing tank reuse requires a tank integrity assessment*

Type of High Level Alarm: _____

(Alarm Set @ 75% tank capacity measured from inlet to bottom)

Comments: _____

## 4. SEPTIC TANK SIZING

*Sizing: See 7080.1930*

### A. Residential dwellings:

Number of Bedrooms (Residential): _____

*Code Minimum* **Septic Tank** Capacity: _____ Gallons with _____ Tanks or Compartments

*Recommended* **Septic Tank** Capacity: _____ Gallons with _____ Tanks or Compartments

The septic tank(s) will be: _____ *Existing tank reuse requires a tank integrity assessment*

Comments: _____

Effluent Screen & Alarm (Y/N): _____ Model/Type: _____

### B. Other Establishments:

Waste received by: Gravity  2460 GPD x 3 Days Hyd. Retention Time

*7080 Minimum* **Septic Tank** Capacity: 7380 Gallons with 1 Tanks or Compartments

*Designed* **Septic Tank** Capacity: 8400 Gallons with 2 Tanks or Compartments

The septic tank(s) will be: All New *Existing tank reuse requires a tank integrity assessment*

Comments: _____

Effluent Screen & Alarm (Y/N): Yes  Model/Type: Polylok 525 (10,000 gpd rated)

*** Other Establishments Require Department of Labor and Industry Approval and Inspection for Building Sewer ***

ONSITE SEWAGE TREATMENT PROGRAM

# Design Summary Page

MINNESOTA POLLUTION CONTROL AGENCY

## 5. PUMP TANK SIZING *Sizing: see 7080.2100*

| Soil Treatment Dosing Tank | | | | Other Component Dosing Tank: | | | |
|---|---|---|---|---|---|---|---|
| Pump Tank Capacity (7080 Minimum): | 4200 | Gal | | Pump Tank Capacity (7080 Minimum): | | Gal | |
| Pump Tank Capacity (Designed): | 4200 | Gal | | Pump Tank Capacity (Designed): | | Gal | |
| Pump Req: | 59.0 | GPM | Total Head: 48.7 ft | Pump Req: | | GPM | Total Head: ft |
| Supply Pipe Dia. | 2.00 | in | Dose Vol: 135.0 gal | Supply Pipe Dia. | | in | Dose Vol: Gal |

*** Flow measurement device must be incorporated for any system with a pump ***

## 6. SYSTEM AND DISTRIBUTION TYPE

Project ID: 11245PO

| | | | |
|---|---|---|---|
| Soil Treatment Type: | Mound | Distribution Type: | Pressure Distribution-Level |
| Elevation Benchmark: | 877.69 ft | Benchmark Location: | Footing for NW corner of raised p |
| MPCA System Type: | Type I | Distribution Media: | Rock |
| Type III/IV/V Details: | | | |

## 7. SITE EVALUATION SUMMARY:

Describe Limiting Condition: Redoximorphic Features/Saturated Soils

Layers with >35% Rock Fragments? (yes/no) No If yes, describe below: % rock and layer thickness, amount of soil credit and any additional information for addressing the rock fragments in this design.

Note:

| | Depth | | Depth | | Elevation | | |
|---|---|---|---|---|---|---|---|
| Limiting Condition: | 30.0 | inches | 2.50 | ft | 877.65 | ft | ***Elevations are critical for system compliance.*** |
| Minimum Req'd Separation: | 36 | inches | 3.00 | ft | | | Mound Minimum Sand Depth: 12 inches |

**Designed Distribution Media Bottom Elevation*:** 881.22 ft Designed Separation: 42.8 inches

*This is the minimum elevation of the bottom of the distribution media for required separation related to the established benchmark

| | | | |
|---|---|---|---|
| A. Soil Texture: | Fine Sand | | |
| B. Soil Hyd. Loading Rate: | 0.60 GPD/ft$^2$ | C: Percolation Rate: | MPI |
| D. Contour Loading Rate: | 10.0 | Note: | |
| E. Measured Land Slope: | 4.0 % | Note: | |
| Comments: | | | |

## 8. SOIL TREATMENT AREA DESIGN SUMMARY

**Trench:**

| | | | | | |
|---|---|---|---|---|---|
| Dispersal Area | sq.ft | Sidewall Depth | in | Trench Width | ft |
| Total Lineal Feet | ft | No. of Trenches | | Code Max. Trench Depth | in |
| Contour Loading Rate | ft | Minimum Length | ft | Designed Trench Depth | in |

**Bed:**

| | | | | | |
|---|---|---|---|---|---|
| Dispersal Area | sq.ft | Sidewall Depth | in | Maximum Bed Depth | in |
| Bed Width | ft | Bed Length | ft | Designed Bed Depth | in |

# Design Summary Page

Project ID: 11245PO

**Mound:**

| | | | | | | | |
|---|---|---|---|---|---|---|---|
| Dispersal Area | 1000.0 | sq.ft | Media Length | 100.0 | ft | Media Width | 10.0 | ft |
| Absorption Width | 20.0 | ft | Clean Sand Lift | 1.0 | ft | Berm Width (0-1%) | | ft |
| Upslope Berm Width | 9.8 | ft | Downslope Berm | 15.4 | ft | Endslope Berm Width | 12.9 | ft |
| Total System Length | 125.8 | ft | System Width | 35.1 | ft | Contour Loading Rate | 10.0 | gal/ft |

**At-Grade:**

| | | | | | | | |
|---|---|---|---|---|---|---|---|
| Dispersal Area | | sq.ft | Bed Length | | ft | Bed Width | | ft |
| Upslope Berm | | ft | Downslope Berm | | ft | Finished Height | | ft |
| System Length | | ft | Endslope Berm | | ft | System Width | | ft |

**Level & Equal Pressure Distribution Soil Treatment Area**

| | | | | | | | | |
|---|---|---|---|---|---|---|---|---|
| No. of Laterals | 3 | | Lateral Diameter | 1.50 | in | Lateral Spacing | 3.0 | ft |
| Perforation Spacing | 3.0 | ft | Perforation Diameter | 3/16 | in | Drainback Volume | 42.5 | gal |
| Min Dose Volume | 129.4 | gal | Max Dose Volume | 147.8 | gal | Total Dosing Volume | 177.5 | gal |

**Non-Level and Unequal Pressure Distribution Soil Treatment Area**

| | Elevation (ft) | Pipe Size (in) | Pipe Volume (gal/ft) | Pipe Length (ft) | Perf Size (in) | Spacing (ft) | Spacing (in) |
|---|---|---|---|---|---|---|---|
| Lateral 1 | | | | | | | |
| Lateral 2 | | | | | | | |
| Lateral 3 | | | | | | | |
| Lateral 4 | | | | | | | |
| Lateral 5 | | | | | | | |
| Lateral 6 | | | | | | | |

Minimum Dose Volume: gal

Maximum Dose Volume: gal

Total Dosing Volume: gal

**9. Organic Loading and Additional Info for HSW or Type IV/V Design - See Organic Loading tab**

**Organic Loading to Soil Treatment (Based on Waste Strength Data and Organic Loading Design)**

**A.** Organic Loading Based on: BOD **B.** Minimum required area 875.0 sq.ft

**Technology Strength Reduction (Treatment Level or HSW)**

**A.** Starting Waste Strength: Treatment designed to meet:

Pretreatment Technology: *Must Meet or Exceed Target Level

Model: Units:

Disinfection Technology: *Required for Levels A & B

Model: Units:

**10. Comments/Special Design Considerations:**

Please read site/soil narrative for detailed discussion of site and proposed system. Dual alternating pumps center feeding a 100' x 10' rockbed mound with 12" sand lift and 1.5" laterals with 3/16" perfs. Must center feed.

I hereby certify that I have completed this work in accordance with all applicable ordinances, rules and laws.

| Alex Pepin | | 4082 | 11/11/2025 |
|---|---|---|---|
| (Designer) | (Signature) | (License #) | (Date) |

# Mound Design Worksheet
## ≥1% Slope

MINNESOTA POLLUTION CONTROL AGENCY

**1. SYSTEM SIZING:** Project ID: 11245PO v 04.07.2025

| | | |
|---|---|---|
| **A.** Design Flow: | 591 | GPD |
| **B.** Soil Loading Rate: | 0.60 | GPD/sqft |
| **C.** Depth to Limiting Condition | 2.5 | ft |
| **D.** Percent Land Slope: | 4.0 | % |
| **E.** Media (Sand) Loading Rate: | 1.0 | GPD/sqft |
| **F.** Mound Absorption Ratio: | 2.00 | |

**Table I**
**MOUND CONTOUR LOADING RATES:**

| Measured Perc Rate | ← OR → | Texture - derived mound absorption ratio | | Contour Loading Rate: |
|---|---|---|---|---|
| ≤ 60mpi | | 1.0, 1.3, 2.0, 2.4, 2.6 | → | ≤12 |
| 61-120 mpi | ← OR → | 5.0 | → | ≤12 |
| ≥ 120 mpi* | | >5.0* | → | ≤6* |

**TABLE IXa**
**LOADING RATES FOR DETERMINING BOTTOM ABSORPTION AREA AND ABSORPTION RATIOS USING PERCOLATION TESTS**

| Percolation Rate (MPI) | Treatment Level C: Absorption Area Loading Rate (gpd/ft²) | Treatment Level C: Mound Absorption Ratio | Treatment Level A, A-2, B: Absorption Area Loading Rate (gpd/ft²) | Treatment Level A, A-2, B: Mound Absorption Ratio |
|---|---|---|---|---|
| <0.1 | - | 1 | - | 1 |
| 0.1 to 5 | 1.2 | 1 | 1.6 | 1 |
| 0.1 to 5 (fine sand and loamy fine sand) | 0.6 | 2 | 1 | 1.6 |
| 6 to 15 | 0.78 | 1.5 | 1 | 1.6 |
| 16 to 30 | 0.6 | 2 | 0.78 | 2 |
| 31 to 45 | 0.5 | 2.4 | 0.78 | 2 |
| 46 to 60 | 0.45 | 2.6 | 0.6 | 2.6 |
| 61 to 120 | - | 5 | 0.3 | 5.3 |
| >120 | - | - | - | - |

*Systems with these values are not Type I systems. Contour Loading Rate (linear loading rate) is a recommended value.

**2. DISPERSAL MEDIA SIZING**

**A.** Hydraulic Absorption Required Bottom Area: Design Flow (1A) ÷ Design Media Loading Rate(1E)

591 GPD ÷ 1.00 GPD/sqft = 591.0 sq.ft

**Optional** Upsizing of Dispersal Media Area

**B.** Larger Area Size or Organic Sizing of Area (see organic loading sheet - 2G) 1000.0 sq.ft

**C.** Designed Dispersal Media Area: 1000.0 sq.ft *Larger of 2A or 2B*

**D.** Enter Dispersal Bed Width: 10.0 ft *Can not exceed 10 feet*

**E.** Calculate Contour Loading Rate: Bed Width(2D) X Design Media Loading Rate(1E)

10.0 ft X 1.0 GPD/sqft = 10.0 gal/ft *Can not exceed Table 1*

**F.** Calculate Minimum Dispersal Bed Length: Dispersal Bed Area(2C) ÷ Bed Width(2D)

1000 sqft ÷ 10.0 ft = 100.0 ft

*If a longer dispersal media is desired, enter Length(ft):* ft

**3. ABSORPTION AREA SIZING**

**A.** Calculate Absorption Width: Bed Width(2D) X Mound Absorption Ratio(1F)

10.0 ft X 2.0 = 20.0 ft

**B.** For slopes >1%, the Absorption Width is measured downhill from the upslope edge of the Bed.

Calculate Downslope Absorption Width: Absorption Width(3A) - Bed Width(2D)

20.0 ft - 10.0 ft = 10.0 ft

## 4. DISTRIBUTION MEDIA:

Project ID: 11245PO

Select Dispersal Media: Rock *Enter Either 4A or 4B*

**A.** Rock Depth Below Distribution Pipe

6 in

**B.** Registered Media

Registered Media Depth in

*Check registered product information for specific application details and design*

Specific Media Comments:

## 5. MOUND SIZING

Project ID: 11245PO

**A.** Clean Sand Lift: Required Separation - Depth to Limiting Condition = Clean Sand Lift (1 ft minimum)

3.00 ft - 2.50 ft = 1.00 ft Design Sand Lift (optional): ft

**B.** Upslope Height = Clean Sand Lift(5A) + Depth of Media(4AorB) + Depth to Cover Pipe(0.33ft) + Depth of Cover (1 ft)

1.00 ft + 0.50 ft + 0.33 ft + 1.00 ft = 2.83 ft

| Land Slope % | | 0 | 1 | 2 | 3 | 4 | 5 | 6 | 7 | 8 | 9 | 10 | 11 | 12 |
|---|---|---|---|---|---|---|---|---|---|---|---|---|---|---|
| Upslope Berm Ratio | 3:1 | 3.00 | 2.91 | 2.83 | 2.75 | 2.68 | 2.61 | 2.54 | 2.48 | 2.42 | 2.36 | 2.31 | 2.26 | 2.21 |
| | 4:1 | 4.00 | 3.85 | 3.70 | 3.57 | 3.45 | 3.33 | 3.23 | 3.12 | 3.03 | 2.94 | 2.86 | 2.78 | 2.70 |

**C.** Select Upslope Berm Multiplier (based on land slope): 3.45

**D.** Calculate Upslope Berm Width: Multiplier (5C) X Upslope Mound Height (5B)

3.45 X 2.83 ft = 9.76 ft

**E.** Calculate Drop in Elevation Under Bed: Bed Width(2D) X Land Slope(1D) ÷ 100 = Drop (ft)

10.00 ft X 4.0 % ÷ 100 = 0.40 ft

**F.** Calculate Downslope Mound Height: Upslope Height(5B) + Drop in Elevation(5E)

2.83 ft + 0.40 ft = 3.23 ft

| Land Slope % | | 0 | 1 | 2 | 3 | 4 | 5 | 6 | 7 | 8 | 9 | 10 | 11 | 12 |
|---|---|---|---|---|---|---|---|---|---|---|---|---|---|---|
| Downslope Berm Ratio | 3:1 | 3.00 | 3.09 | 3.19 | 3.30 | 3.41 | 3.53 | 3.66 | 3.80 | 3.95 | 4.11 | 4.29 | 4.48 | 4.69 |
| | 4:1 | 4.00 | 4.17 | 4.35 | 4.54 | 4.76 | 5.00 | 5.26 | 5.56 | 5.88 | 6.25 | 6.67 | 7.14 | 7.69 |

**G.** Select Downslope Berm Multiplier (based on land slope): 4.76

**H.** Calculate Downslope Berm Width: Downslope Multiplier(5G) X Downslope Height (5F)

4.76 x 3.23 ft = 15.35 ft

**I.** Calculate Minimum Berm to Cover Absorption Area: Downslope Absorption Width(3B) + 4 feet

10.00 ft + 4.00 ft = 14.00 ft

**J.** Design Downslope Berm = greater of 5H and 5I: 15.35 ft

**K.** Select Endslope Berm Multiplier: 4.0 *(usually 3.0 or 4.0)*

**L.** Calculate Endslope Berm Width = Endslope Berm Multiplier(5K) X Downslope Mound Height(5F)

4.00 X 3.2 ft = 12.90 ft

**M.** Calculate Mound Width: Upslope Berm Width(5D) + Bed Width(2D) + Downslope Berm Width(5J)

9.76 ft + 10.00 ft + 15.35 ft = 35.11 ft

**N.** Calculate Mound Length: Endslope Berm Width (5L) + Bed Length(2F) + Endslope Berm Width(5L)

12.90 ft + 100.00 ft + 12.90 ft = 125.80 ft

**6. MOUND DIMENSIONS (Feet)** Project ID: 11245PO

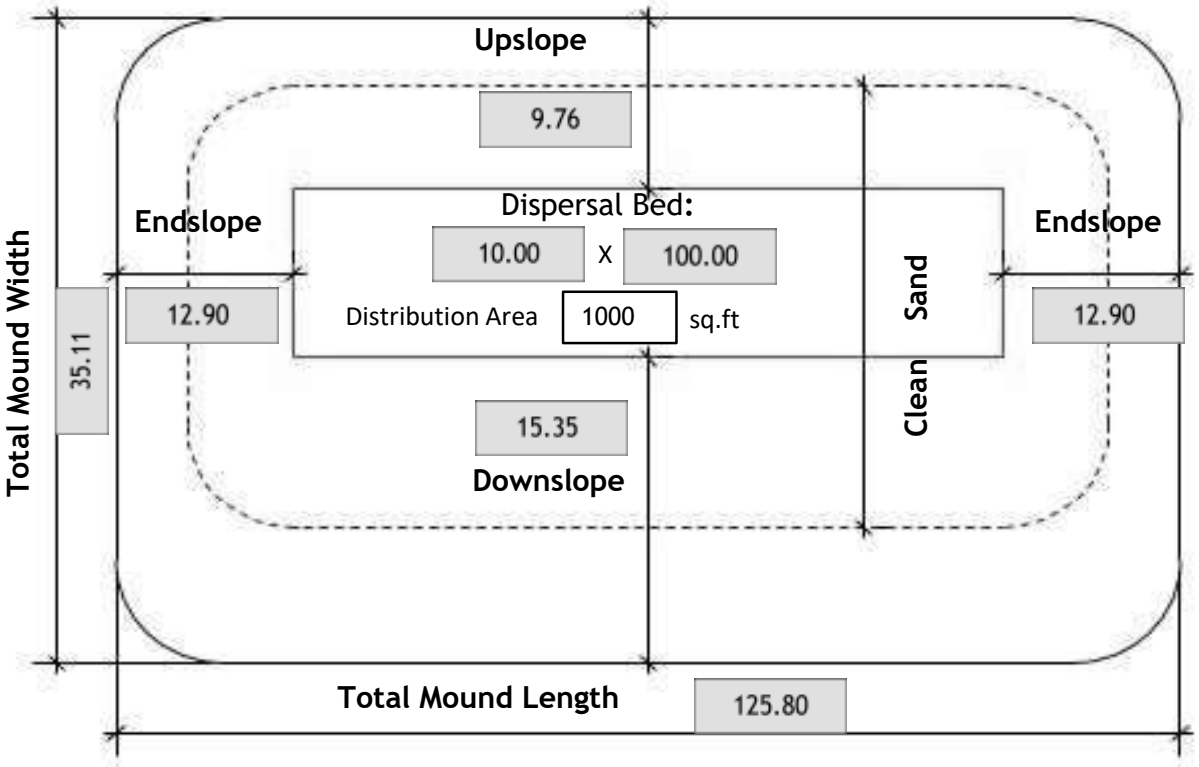


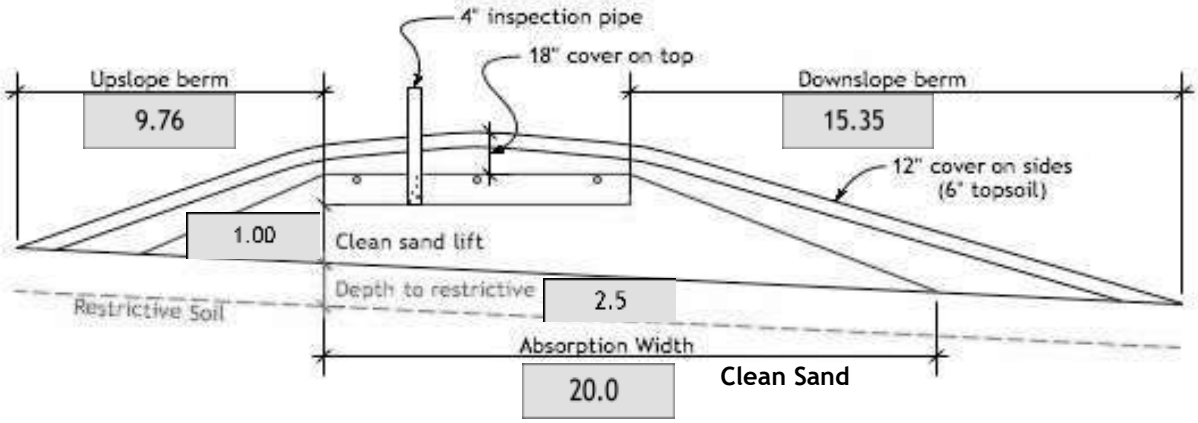


Elevation to Benchmark

Required Separation: 36.0 (in) Elevation Limiting Layer: 877.65 ft

Distribution Media: Rock Elevation required Separation: 880.65 ft

Media Depth *Below Pipe* 6 (in) Elevation Distribution Media Bottom: 881.22 ft

Manifold Connection: Center Lateral Pipe Diameter: 1.50 (in)

Perforation Size: 3/16 (in) Perforation Spacing: 36.0 (in)

If Split and Non-Level Pressure Distribution Used: See Non-Level Pressure Distribution Form

**Comments:**

Installer to verify material volumes on the following page

# Estimated Mound Materials Worksheet

Mound to be constructed to dimensions in design. This is an estimate of materials needed.
Individual construction practices may vary quantities.

Project ID: 11245PO v 04.07.2025

**A.** Rock *Volume*: (Rock Below Pipe + Rock to cover pipe (*pipe outside dia + ~2 inch)* ) X *Bed Length* X *Bed Width* = *Volume*

( 6 in + 5.0 in ) ÷ 12 X 100.0 ft X 10.0 ft = 916.7 cu.ft

Divide cu.ft by 27 cu.ft/cu.yd to calculate cubic yards: 916.7 cu.ft ÷ 27 = 34.0 cu.yd

Add 30% for constructability: 34.0 cu.yd X 1.3 = 44.1 cu.yd

**B.** Calculate *Clean Sand Volume:*

*Volume Under Rock bed*: *Average Sand Depth* x *Media Width* x *Media Length* = cubic feet

1.2 ft X 10.0 ft X 100 ft = 1198 cu.ft

**For a Mound on a slope from 0-1%**

Volume from Length = ((Upslope Mound Height - 1) X Absorption Width Beyond Bed X Media Bed Length)

ft - 1) X X ft =

Volume from Width = ((Upslope Mound Height - 1) X Absorption Width Beyond Bed X Media Bed Width)

ft - 1) X X ft =

*Total Clean Sand Volume*: *Volume from Length + Volume from Width + Volume Under Media*

cu.ft + cu.ft + cu.ft = cu.ft

**For a Mound on a slope greater than 1%**

*Upslope Volume*: ((*Upslope Mound Height - 1*) x 3 x *Bed Length*) ÷ 2 = cubic feet

(( 2.8 ft - 1) X 3.0 ft X 100.0 ) ÷ 2 = 274.5 cu.ft

*Downslope Volume*: ((*Downslope Height - 1)* x Downslope Absorption Width x *Media Length*) ÷ 2 = cubic feet

(( 3.2 ft - 1) X 10.0 ft X 100.0 ) ÷ 2 = 1112.5 cu.ft

*Endslope Volume*: (*Downslope Mound Height - 1)* x 3 x *Media Width* = cubic feet

( 3.2 ft - 1 ) X 3.0 ft X 10.0 ft = 66.8 cu.ft

*Total Clean Sand Volume*: *Upslope Volume + Downslope Volume + Endslope Volume + Volume Under Media*

274.5 cu.ft + 1112.5 cu.ft + 66.8 cu.ft + 1197.5 cu.ft = 2651.3 cu.ft

Divide cu.ft by 27 cu.ft/cu.yd to calculate cubic yards: 2651.3 cu.ft ÷ 27 = 98.2 cu.yd

Add 30% for constructability: 98.2 cu.yd X 1.3 = 127.7 cu.yd

**C.** Calculate *Sandy Berm Volume:*

*Total Berm Volume (approx.)*: ((Avg. Mound Height - 0.5 ft topsoil) x Mound Width x Mound Length) ÷ 2

( 3.0 - 0.5 )ft X 35.1 ft X 125.8 ) ÷ 2 = 5582.5 cu.ft

*Total Mound Volume - Clean Sand volume -Rock Volume = cubic feet*

5582.5 cu.ft - 2651.3 cu.ft - 916.7 cu.ft = 2014.6 cu.ft

Divide cu.ft by 27 cu.ft/cu.yd to calculate cubic yards: 2014.6 cu.ft ÷ 27 = 74.6 cu.yd

Add 30% for constructability: 74.6 $yd^3$ x 1.3 = 97.0 cu.yd

**D.** Calculate *Topsoil Material Volume: Total Mound Width X Total Mound Length X .5 ft*

35.1 ft X 125.8 ft X 0.5 ft = 2208.7 cu.ft

Divide cu.ft by 27 cu.ft/cu.yd to calculate cubic yards: 2208.7 cu.ft ÷ 27 = 81.8 cu.yd

Add 30% for constructability: 81.8 cu.yd X 1.3 = 106.3 cu.yd

ONSITE SEWAGE TREATMENT PROGRAM

# Pressure Distribution Design Worksheet

MINNESOTA POLLUTION CONTROL AGENCY

Project ID: 11245PO v 04.07.2025

1. Media Bed Width: 10.0 ft
2. Media Bed Length: 100.0 ft
3. Minimum Number of Laterals in system/zone = Rounded up number of [(Media Bed Width(1.) - 4) ÷ 3] + 1.

   [( 10 - 4 ) ÷ 3] + 1 = 3 laterals *Does not apply to at-grades*
4. Designer Selected *Number of Laterals*: 3 laterals

   *Cannot be less than line 2 (Except in at-grades)*

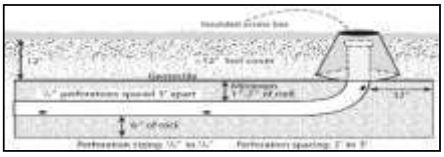

5. Lateral spacing in Bed; *Must be greater than 1 foot and no more than 3 feet*: 3.00 ft
6. *Length of Laterals* = Media Bed Length(2.) - 2 Feet.

   100.0 - 2ft = 98.0 ft *Perforation can not be closer then 1 foot from edge.*
7. Select *Perforation Spacing*: 3.0 ft
8. Determine the *Number of Perforation Spaces*. Divide the *Length of Laterals(6.)* by the *Perforation Spacing* (7.) and round down to the nearest whole number.

   *Number of Perforation Spaces* = 98.0 ft ÷ 3.0 ft = 32 Spaces
9. *Number of Perforations per Lateral* is equal to 1.0 plus the *Number of Perforation Spaces(8.)*. Check table below to verify the number of perforations per lateral guarantees less than a 10% discharge variation. The value is double with a center manifold.

   *Perforations Per Lateral* = 32 Spaces + 1 = 33 Perfs. Per Lateral
10. Select *Perforation Diameter Size:* 3/16 in 0.1875
11. *Select Lateral Diameter (See Table)*: 1.50 in
12. Select *Manifold Connection* (End or Center): Center

If Center Manifold Connection the max number of perfs per lateral in the table can be doubled.

**Maximum Number of Perforations Per Lateral to Guarantee <10% Discharge Variation**

| ¼ Inch Perforations | | | | | | 7/32 Inch Perforations | | | | | |
|---|---|---|---|---|---|---|---|---|---|---|---|
| Perforation Spacing (Feet) | Pipe Diameter (Inches) | | | | | Perforation Spacing (Feet) | Pipe Diameter (Inches) | | | | |
| | 1 | 1¼ | 1½ | 2 | 3 | | 1 | 1¼ | 1½ | 2 | 3 |
| 2 | 10 | 13 | 18 | 30 | 60 | 2 | 11 | 16 | 21 | 34 | 68 |
| 2½ | 8 | 12 | 16 | 28 | 54 | 2½ | 10 | 14 | 20 | 32 | 64 |
| 3 | 8 | 12 | 16 | 25 | 52 | 3 | 9 | 14 | 19 | 30 | 60 |
| 3/16 Inch Perforations | | | | | | 1/8 Inch Perforations | | | | | |
| Perforation Spacing (Feet) | Pipe Diameter (Inches) | | | | | Perforation Spacing (Feet) | Pipe Diameter (Inches) | | | | |
| | 1 | 1¼ | 1½ | 2 | 3 | | 1 | 1¼ | 1½ | 2 | 3 |
| 2 | 12 | 18 | 26 | 46 | 87 | 2 | 21 | 33 | 44 | 74 | 149 |
| 2½ | 12 | 17 | 24 | 40 | 80 | 2½ | 20 | 30 | 41 | 69 | 135 |
| 3 | 12 | 16 | 22 | 37 | 75 | 3 | 20 | 29 | 38 | 64 | 128 |

# Pressure Distribution Design Worksheet

ONSITE SEWAGE TREATMENT PROGRAM

MINNESOTA POLLUTION CONTROL AGENCY

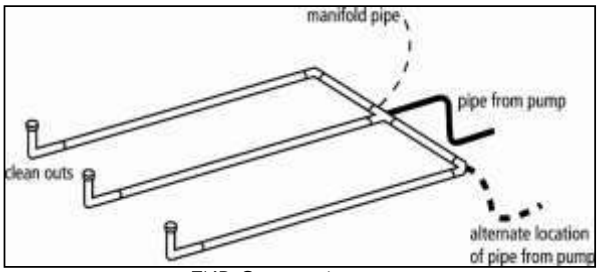


END Connection

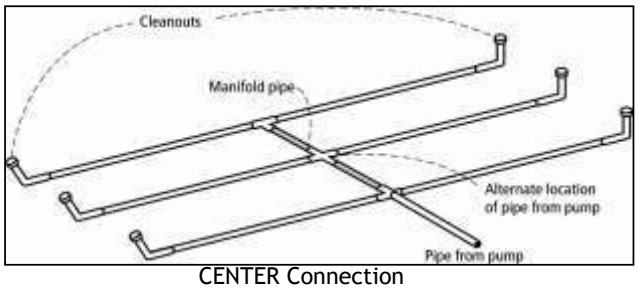


CENTER Connection

Perf Per Lateral: 33

Perf Per Lateral Equal Split: 17 | 16

OPTIONAL Perf Per Lateral Non-Equal Split*: ____ | ____

* must not exceed maximum number perfs per lateral in table

End Feed Lateral Min Diameter: ____

Center Feed Lateral Min Diameter: ____

13. *Total Number of Perforations* equals the *Number of Perforations per Lateral (9.)* multiplied by the *Number of Perforated Laterals.(4.)*

33 Perf. Per Lat. X 3 Number of Perf. Lat. = 99 Total Number of Perf.

14. Calculate the *Square Feet per Perforation.*

*Recommended value is 4-11 ft2 per perforation, Does not apply to At-Grades*

a. *Bed Area* = Bed Width (ft)(1.) X Bed Length (ft)(2.)

10.00 ft X 100.00 ft = 1000 sq.ft

b. *Square Foot per Perforation* = *Bed Area (14a)* ÷ by *Total Number of Perfs (13)*

1000 sqft ÷ 99 perf = 10 sq.ft/perf

15. Select *Minimum Average Head*: 2.0 ft

16. Select *Perforation Discharge* based on Table: 0.59 GPM per Perf

17. *Flow Rate = Total Number of Perfs(13.) X Perforation Discharge(16.)*

99 Perfs X 0.59 GPM per Perforation = 59.0 GPM

18. *Volume of Liquid Per Foot of Distribution Piping (Table II)*: 0.110 Gallons/ft

19. *Volume of Distribution Piping = Number of Perforated Laterals(4.) X Length of Laterals(6.) X Volume of Liquid Per Foot of Distribution Piping (18.)*

3 X 98.0 ft X 0.110 gal/ft = 32.3 Gallons

20. Minimum Delivered Volume = Volume of Distribution Piping (19.) X 4

32.3 gal X 4 = 129.4 Gallons

21. Maximum Delivered Volume = Design flow x 25%

591 gpd X 25% = 147.8 Gallons

22. Minimum Delivered vs Maximum Delivered evaluation: Volume ratio correct

| Perforation Discharge (GPM) | | | | |
|---|---|---|---|---|
| Head (ft) | Perforation Diameter | | | |
| | 1/8 | 3/16 | 7/32 | 1/4 |
| 1.0[4] | 0.18 | 0.41 | 0.56 | 0.74 |
| 1.5 | 0.22 | 0.51 | 0.69 | 0.9 |
| 2.0[5] | 0.26 | 0.59 | 0.80 | 1.04 |
| 2.5 | 0.29 | 0.65 | 0.89 | 1.17 |
| 3.0 | 0.32 | 0.72 | 0.98 | 1.28 |
| 4.0 | 0.37 | 0.83 | 1.13 | 1.47 |
| 5.0[5] | 0.41 | 0.93 | 1.26 | 1.65 |
| 1 foot | Dwellings with 3/16 inch to 1/4 inch perforations | | | |
| 2 feet | Dwellings with 1/8 inch perforations | | | |
| | Other establishments and MSTS with 3/16 inch to 1/4 inch perforations | | | |
| 5 feet | Other establishments and MSTS with 1/8 inch perforations | | | |

**Table II Volume of Liquid in Pipe**

| Pipe Diameter (inches) | Liquid Per Foot (Gallons) |
|---|---|
| 1 | 0.045 |
| 1.25 | 0.078 |
| 1.5 | 0.110 |
| 2 | 0.170 |
| 3 | 0.380 |
| 4 | 0.661 |

Comments/Special Design Considerations:

# Basic STA Pump Selection Design Worksheet

ONSITE SEWAGE TREATMENT PROGRAM

MINNESOTA POLLUTION CONTROL AGENCY

**1. PUMP CAPACITY** Project ID: 11245PO v 04.07.2025

**Pumping to Gravity or Pressure Distribution:** Pressure

**A.** If pumping to gravity enter the gallon per minute of the pump: _____ GPM *(10 - 45 gpm)*

**B.** If pumping to a pressurized distribution system: 59.0 GPM

**C.** Enter pump description: Equalization/Time Dosing

**2. HEAD REQUIREMENTS**

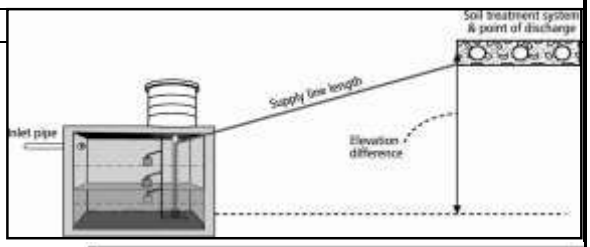


**A.** Elevation Difference between pump and point of discharge: 16.8 ft

**B.** Distribution Head Loss: 6 ft

**C.** Additional Head Loss*: _____ ft (due to special equipment, etc.)

*** Common additional head loss: gate valve = 1 ft each, globe valve = 1.5 ft each, splitter valve = see manufacturers details**

| Distribution Head Loss | |
|---|---|
| Gravity Distribution = 0ft | |
| Pressure Distribution based on Minimum Average Head Value on Pressure Distribution Worksheet: | |
| **Minimum Average Head** | **Distribution Head Loss** |
| 1ft | 5ft |
| 2ft | 6ft |
| 5ft | 10ft |

**Table I. Friction Loss in Plastic Pipe per 100ft**

| Flow Rate (GPM) | Pipe Diameter (inches) | | | |
|---|---|---|---|---|
| | 1 | 1.25 | 1.5 | 2 |
| 10 | 9.1 | 3.1 | 1.3 | 0.3 |
| 12 | 12.8 | 4.3 | 1.8 | 0.4 |
| 14 | 17.0 | 5.7 | 2.4 | 0.6 |
| 16 | 21.8 | 7.3 | 3.0 | 0.7 |
| 18 | | 9.1 | 3.8 | 0.9 |
| 20 | | 11.1 | 4.6 | 1.1 |
| 25 | | 16.8 | 6.9 | 1.7 |
| 30 | | 23.5 | 9.7 | 2.4 |
| 35 | | | 12.9 | 3.2 |
| 40 | | | 16.5 | 4.1 |
| 45 | | | 20.5 | 5.0 |
| 50 | | | | 6.1 |
| 55 | | | | 7.3 |
| 60 | | | | 8.6 |
| 65 | | | | 10.0 |
| 70 | | | | 11.4 |
| 75 | | | | 13.0 |
| 85 | | | | 16.4 |
| 95 | | | | 20.1 |

**D.** 1. Supply Pipe Diameter: 2.0 in

2. Supply Pipe Length: 250 ft

**E.** **Friction Loss in Plastic Pipe per 100ft** from Table I:

Friction Loss = 8.3 ft per 100ft of pipe

**F.** Determine *Equivalent Pipe Length* from pump discharge to soil dispersal area discharge point. Estimate by adding 25% to supply pipe length for fitting loss.
*Supply Pipe Length* X 1.25 = *Equivalent Pipe Length*

250 ft X 1.25 = 312.5 ft

**G.** Calculate *Supply Friction Loss* by multiplying *Friction Loss Per 100ft(E.)* by the *Equivalent Pipe Length(F.)* and divide by 100.

Supply Friction Loss =

8.3 ft per 100ft X 312.5 ft ÷ 100 = 25.9 ft

**H.** *Total Head* requirement is the sum of the *Elevation Difference(2A)* + Distribution Head Loss(2B) + Additional Head Loss(2C) + Supply Friction Loss(2G)

17 ft + 6.0 ft + _____ ft + 25.9 ft = 48.7 ft

**3. PUMP SELECTION**

A pump must be selected to deliver at least **59.0** GPM with at least **48.7** feet of total head.

Comments:

Goulds WE15H pump. Estimated operating point for time dosing 67 gpm.

# STA Dosing Pump Tank Design Worksheet (Time Dose)

MINNESOTA POLLUTION CONTROL AGENCY

Project ID: 11245PO v 04.07.2025

## DETERMINE TANK CAPACITY AND DIMENSIONS

1. A. Design Flow: 591 GPD B. Tank Use: **Dosing**

   C. Percentage of Design Flow 70 % 414 Gal Up to 75% design flow is normal for Design percentage

   D. Code minimum pump tank capacity: 4200 Gal E. Recommended capacity: 4200 Gal

2. A. Tank Manufacturer: Wieser B. Tank Model: W4200

   C. Capacity from manufacturer: 4200 Gallons

   D. Liquid depth of tank from manufacturer: 72.0 inches

   E. Gallons per inch: 58.9 Gallons per inch

*Note: Design calculations are based on this specific tank. Substituting a different tank model will change the pump float or timer settings. Contact designer if changes are necessary.*

## DETERMINE DOSING VOLUME

3. *Volume to Cover Pump* (The inlet of pump should be 4 inches from the bottom of the tank & 2 inches covering the pump recommended)

   (Pump and block height + 2 inches) X *Gallons Per Inch* (2E)

   ( 16 in + 2 inches) X 58.9 Gallons Per Inch = 1059.3 Gallons

4. *Minimum Delivered Volume* = 4 X Volume of Distribution Piping:

   *-Item 19 of the Pressure Distribution or Item 11 of Non-level* 129.4 Gallons (minimum dose) 2.20 inches/dose

5. Calculate *Maximum Pumpout Volume* (25% of Design Flow)

   Design Flow: 591 GPD X 0.25 = 147.8 Gallons (maximum dose) 2.51 inches/dose

6. *Select a pumpout volume that meets both Minimum and Maximum:* 135.0 Gallons

7. Calculate *Doses Per Day* = Percentage Design Flow(1C) ÷ *Delivered Volume(6.)*

   414 gpd ÷ 135.0 gal = 3.1 *Doses*

8. Calculate Drainback:

   A. *Diameter of Supply Pipe* = 2 inches

   B. Length of Supply Pipe = 250 feet

   C. *Volume of Liquid Per Lineal Foot of Pipe* = 0.170 Gallons/ft

   D. *Drainback = Length of Supply Pipe(8B)* X *Volume of Liquid Per Lineal Foot of Pipe(8C)*

   250 ft X 0.170 gal/ft = 42.5 Gallons

9. *Total Dosing Volume = Delivered Volume(6.) + Drainback(8D)*

   135.0 gal + 42.5 gal = 177.5 Gallons

10. Working Storage Volume = Tank Volume (2C) - Volume to Cover Pump(3.) - Reserve Capacity (22.)

    4200.0 gal - 1059.3 gal - 423.7 = 2717.0 Gallons

| Volume of Liquid in Pipe | |
|---|---|
| Pipe Diameter (inches) | Liquid Per Foot (Gallons) |
| 1 | 0.045 |
| 1.25 | 0.078 |
| 1.5 | 0.110 |
| 2 | 0.170 |
| 3 | 0.380 |
| 4 | 0.661 |

# STA Dosing Pump Tank Design Worksheet (Time Dose)

ONSITE SEWAGE TREATMENT PROGRAM

MINNESOTA POLLUTION CONTROL AGENCY

11. Required *Flow Rate* :

A. From Pump Curve - **Must verify after Install**: 67 GPM*

B. Calculated GPM = Change in Depth (in) x Gallons Per Inch(2E) / Time Interval in Minutes

[ ] in X 58.9 gal/in ÷ [ ] min = [ ] GPM

***Note: This value must be adjusted after installation based on pump calibration.***

12. Select Flow Rate from 11 A or B: 67.0 GPM*

**NORMAL OPERATION TIMER SETTINGS***

13. Calculate **TIMER ON** setting*:

Total Dosing Volume(9.) ÷ GPM(12.)

178 gal ÷ 67.0 gpm = 2.6 Minutes **ON*** | HR 0 | MIN 2.0 | SEC 38 | **ON Time**

14. Calculated **TIMER OFF** setting*:

Minutes Per Day (1440)/*Doses Per Day(7.)* - Minutes On(13.)

1440 min ÷ 3 doses/day - 2.6 min = 467.3 Minutes **OFF*** | HR 7 | MIN 47.0 | SEC 15 | **OFF Time**

**OPTIONAL PEAK ENABLE DOSING* - *Designers option for peak flow operation***

15. Peak Percentage of Design Flow [ ] %

16. Peak Pump Volume that meets both Minimum and Maximum Volume [ ] gal + Drainback 42.5 gal

17. Peak Dose Volume [ ] gal

18. Peak TIMER ON [ ] gal ÷ [ ] gpm = [ ] min ON | HR [ ] MIN [ ] SEC [ ] Peak ON

**Note: This value must be adjusted after installation based on pump calibration.*

19. Peak TIMER OFF:1440 min ÷ [ ] doses/day - [ ] min On [ ] min Off | HR [ ] MIN [ ] SEC [ ] Peak OFF

**FLOAT SETTINGS** **Alarm and Pump are to be wired on separate circuits and inspected by the electrical inspector**

20. Pump Off Float - Measuring from bottom of tank:

*Distance to set Pump Off Float=Gallons to Cover Pump(3.) ÷ Gallons Per Inch(2E):*

1059 gal ÷ 58.9 gal/in = 18.0 inches

*Alarm Depth* 64.8 in

21. Alarm Float - Measuring from bottom of tank (90% recommended):

*Distance to set Alarm Float = Tank Depth(2D) X % of Tank Depth (90% recommended)*

72.0 in X 90 % = 64.8 inches

*Pump Off* 18.0 in

22. Reserve Capacity in gallons = Tank Depth(2D) - Alarm Depth(21.) X Gallons Per Inch(2E)

( 72.0 in - 64.8 in) X 58.9 = 423.7 gallons

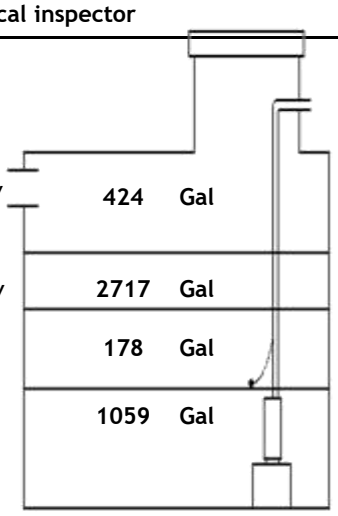

# Tank Buoyancy Worksheet

**1. Tank Specifications** Project ID: 11245PO v 04.07.2025

A. Tank Manufacturer: Wieser Tank Model: W4200

B. Outside Tank Dimensions and Specifications: Tank Use:

Length: 164 in Width: 96 in Height: 98.5 in Diameter: in

Length: 13.7 ft Width: 8.0 ft Height: 8.2 ft Radius of Tank: in

**2. Outside Volume of Tank**

| Rectangular Tank | Circular Tank |
|---|---|
| A. Area of Tank = Length (ft) X Width (ft) | A. Area of Tank = $\pi r^2$ = (3.14 X (Radius of Tank)$^2$) |
| 13.7 ft X 8.0 ft = 109.3 sq.ft | 3.14 X ( ) ft)$^2$ = sq.ft |
| B. Volume of Tank = Area of Tank (2.A) X Height (ft) | B. Volume of Tank = Area of Tank X Height (ft) |
| 109.3 sq.ft X 8.2 ft = 897.4 cu.ft | sq.ft X ft = cu.ft |

**3. Force of Tank Weight ($F_{TW}$)**

Weight of Tank (provided by manufacturer) 26400 lbs

**4. Force of Soil Weight Over Tank ($F_{SW}$)**

A. Depth of Cover Over Tank: 37.5 in 3.1 ft

B. Weight of Soil Per Cubic Foot: 120 lbs/cu.ft

C. Volume of Soil Over Tank = Depth of Cover(4A) (ft) X Area of Tank(2A) (ft$^2$)

3.1 ft X 109.3 sq.ft = 341.7 cu.ft

D. Weight of Soil Over Tank = Volume of Soil Over Tank(4C) X Weight of Soil Per Cubic Foot

341.7 cu.ft X 120 lbs/cu.ft = 41,000.0 lbs *Note: Assumes saturation does not get over the lid of the tank*

| Soil Type | Weight of Soil (lbs/ft$^3$) |
|---|---|
| Sandy | 120 |
| Loamy | 100 |
| Clay | 90 |

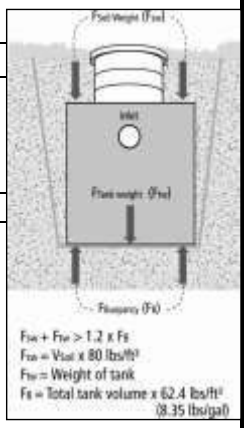


**5.Buoyant Force ($F_B$)**

Buoyant Force ($F_B$) = Outside Volume of Tank(2B) X Weight of Water Per Cubic Foot (62.4 lbs/ft$^3$) X 1.2 (Safety Factor)

897 X 62.4 lbs/cu.ft X 1.2 = 67,200.6 lbs

**6. Evaluation of Net Forces**

A. Downward Force = Force of Tank Weight ($F_{TW}$)(3.) + Force of Soil Weight of Soil ($F_{SW}$)(4D.)

26400 lbs + 41000 lbs = 67,400.0 lbs

B. Net Difference = Downward Force(6A) - Buoyant Force Including Safety Factor (5.)

67400 lbs - 67201 lbs = 199.4 lbs

If the Net Difference is negative, counter measures will need to be taken to prevent the tank from floating out of the ground.

C. Feet of soil as counter measure = Net difference (6B)(if negative)(as absolute number) ÷ Weight of Soil ÷ Area of Tank (2A)

0 lbs ÷ 120 lbs/ft$^3$ ÷ 109.3 (ft$^2$) = 0.0 ft of Soil Needed (minimum)

Comments/Solution:

As designed all tanks over 37.5" to top of tank, no buoyancy issues. If shallower contact tank manufacturer for buoyancy countermeasures.

# Organic Loading Considerations

Project ID: 11245PO v 04.07.2025

**Property Address:** New Life Community Church

Date Completed: 11/11/2025

## 1. DESIGN FLOW & WASTE STRENGTH SAMPLING

*Attach waste strength sampling data/estimated strength for Other Establishments*

A. Design Flow: 591 GPD B. Measured Flow: GPD or Anticipated Flow: 413.7 GPD

C. BOD 241 mg/L D. TSS 60 mg/L E. Oil & Grease 25 mg/L F. CBOD5 mg/L

G. SQ feet STA in Design: 1000.0 sq.ft Anticipated Waste Type: Other Est. - At-Risk

## 2. ORGANIC LOADING TO SOIL TREATMENT

A. Soil Texture: Medium Sand

B. Sustainable Organic Loading Rate : *See table 5.1 for organic loading values of soil /media interface*

BOD5 0.001191 lbs/sq.ft/day TSS 0.000420 lbs/sq.ft/day

FOG 0.000175 lbs/sq.ft/day CBOD5 lbs/sq.ft/day

**C. BOD LOADING** #### N/A *Enter measured or anticipated flow above for calculations*

1. BOD5 Loading = Flow (1A or B) gpm X 0.7 X BOD Concentration mg/L (1C) X 8.35 ÷ 1,000,000

414 gpd X 241 mg/L X 8.35 ÷ 1,000,000 = 0.83251 lbs. BOD/day (Organic Loading Design)

2. Organic Loading to Soil Treatment Area:

241 mg/L X 414 gpd X 0.7 X 8.35 ÷ 1,000,000 ÷ 1000.0 sq.ft = 0.000583 lbs./day/sqft

3. Organic Sized Absorption Bed Area = Organic Loading lbs BOD (2C1) ÷ Organic Soil Loading Rate (2B)

0.83251 lbs BOD ÷ 0.001191 lbs BOD/sq.ft = 699.0 sq.ft

**D. TSS LOADING** #### N/A

1. Starting TSS Concentration = Flow (1A or B) gpm X 0.7 X Starting TSS (1D) mg/L X 8.35 ÷ 1,000,000

414 gpd X 60 mg/L X 8.35 ÷ 1,000,000 = 0.20726 lbs. TSS/day (Organic Loading Design)

2. Organic Loading to Soil Treatment Area:

60 mg/L X 414 gpd X 0.7 X 8.35 ÷ 1,000,000 ÷ 1000.0 sq.ft = 0.000145 lbs./day/sqft

3. Organic Sized Absorption Bed Area = Organic Loading lbs TSS (2D1) ÷ Organic Soil Loading Rate (2B)

0.20726 lbs TSS ÷ 0.000420 lbs TSS/sq.ft = 493.5 sq.ft

**E. FOG LOADING** #### N/A

1. Starting FOG Concentration = Flow (1A or B) X 0.7 X Starting FOG (mg/L) X 8.34 ÷ 1,000,000

414 gpd X 25 mg/L X 8.35 ÷ 1,000,000 = 0.08636 lbs. FOG/day (Organic Loading Design)

2. Organic Loading to Soil Treatment Area:

25 mg/L X 414 gpd X 0.7 X 8.35 ÷ 1,000,000 ÷ 1000.0 sq.ft = 0.000060 lbs./day/sqft

3. Organic Sized Absorption Bed Area = Organic Loading lbs FOG (2E1) ÷ Organic Soil Loading Rate (2B)

0.08636 lbs FOG ÷ 0.000175 lbs FOG/sq.ft = 493.5 sq.ft

**F. CBOD LOADING** #### N/A

1. Starting CBOD5 Concentration =Flow (1A or B) X 0.7 X Starting CBOD (mg/L) X 8.34 ÷ 1,000,000

gpd X mg/L X 8.35 ÷ 1,000,000 = lbs. CBOD/day (Organic Loading Design)

2. Organic Loading to Soil Treatment Area:

mg/L X gpd X 0.7 X 8.35 ÷ 1,000,000 ÷ sq.ft = lbs./day/sqft

3. Organic Sized Absorption Bed Area = Organic Loading lbs CBOD (2F1) ÷ Organic Soil Loading Rate (2B)

lbs CBOD ÷ lbs CBOD/sq.ft = sq.ft

**G. ORGANIC LOADING ABSORBTION BED AREA** Largest Bed Absorption Area: BOD, TSS, FOG, CBOD 699.0 sq.ft

# Flow Equalization Tank Worksheet To STA

Project ID: v 04.07.2025

**1. Enter the peak 7 days measured or estimated flow:**

| # | Daily Flow Volume*(gal) | Time Dose Volume (gal) | Surge Volume (gal) |
|---|---|---|---|
| 1 | **2460** | 591 | 1869 |
| 2 | **860** | 591 | 2137 |
| 3 | **460** | 591 | 2006 |
| 4 | **120** | 591 | 1534 |
| 5 | **120** | 591 | 1063 |
| 6 | **120** | 591 | 591 |
| 7 | **0** | 591 | 0 |

**Start with Highest daily flow value*

Total Weekly Flow: 4140 gal (Sum of Daily Flow 1-7)

Peak Daily Flow: 2460 gal (Max of Daily Flow 1-7)

Average Daily Value: 591 gal (Ave of Daily Flow 1-7)

Peak to Average Flow: 4.2

Maximum Surge Volume: 2137 gal (Max of Surge Vol 1-7)

Maximum Surge Volume + Average Daily Volume: 2729 gal

**2. Choose peaking factor**: 15 %

Surge + Peaking Factor: 3138 gal

**3. Enter gallons to cover pump**: 1059 gal (From Pump Tank STA Time)

Minimum flow equalization tank volume: 4197 gal

Minimum Design Flow for soil dispersal system: 845 gpd

Minimum Design flow based on 70% use from time dose volume

**Comments:**

ONSITE SEWAGE TREATMENT PROGRAM

# Flow Estimation: Other Establishments

MINNESOTA POLLUTION CONTROL AGENCY

v 04.07.2025

| Establishment | *7081* Specified Type of Establishment | Unit | # of Units | Design Flow per Unit (See Table I) | Total Avg Daily Flow |
|---|---|---|---|---|---|
| 1 | Church | Seat | 600 | 4.00 | 2400 |
| 2 | Employee | Person | 4 | 15.00 | 60 |
| 3 | Sunday | | | | |
| 4 | | | | | |
| 5 | | | | | |
| | | | | **Total Flow 7081 Establishments** (gpd) | 2460 |

| Establishment | *NON 7081* Specified Type of Establishment | Unit | # of Units | Design Flow per Unit | Total Avg Daily Flow |
|---|---|---|---|---|---|
| 6 | Church | Seat | 200 | 4.00 | 800 |
| 7 | Employee | Person | 4 | 15.00 | 60 |
| 8 | Wednesday | | | | |
| 9 | | | | | |
| 10 | | | | | |
| | | | | **Total Flow Non-7081 Establishments** (gpd) | 860.00 |
| | | | | **Safety Factor** (gpd) | |
| | | | | **Total Flow 7081 and Non 7081 Establishments** (gpd) | |

ONSITE SEWAGE TREATMENT PROGRAM

# Flow Estimation: Other Establishments

MINNESOTA POLLUTION CONTROL AGENCY

v 04.07.2025

| Establishment | *7081* Specified Type of Establishment | Unit | # of Units | Design Flow per Unit (See Table I) | Total Avg Daily Flow |
|---|---|---|---|---|---|
| 1 | Church | Seat | 100 | 4.00 | 400 |
| 2 | Employee | Person | 4 | 15.00 | 60 |
| 3 | Thursday | | | | |
| 4 | | | | | |
| 5 | | | | | |
| | | | | **Total Flow 7081 Establishments** (gpd) | 460 |

| Establishment | *NON 7081* Specified Type of Establishment | Unit | # of Units | Design Flow per Unit | Total Avg Daily Flow |
|---|---|---|---|---|---|
| 6 | Church | Seat | 15 | 4.00 | 60 |
| 7 | Employee | Person | 4 | 15.00 | 60 |
| 8 | Tues, Fri and Sat | | | | |
| 9 | | | | | |
| 10 | | | | | |
| | | | | **Total Flow Non-7081 Establishments** (gpd) | 120.00 |
| | | | | **Safety Factor** (gpd) | |
| | | | | **Total Flow 7081 and Non 7081 Establishments** (gpd) | |

# W4200
# TANK SPECIFICATIONS

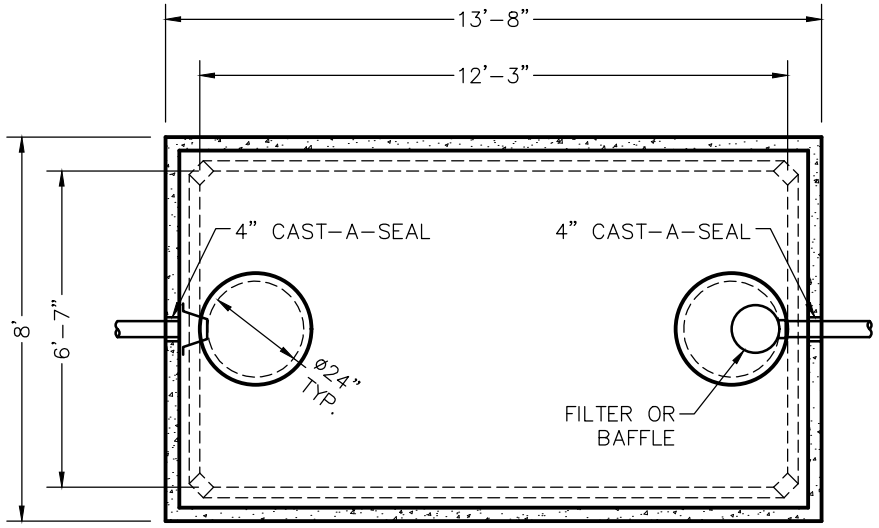


TOP VIEW

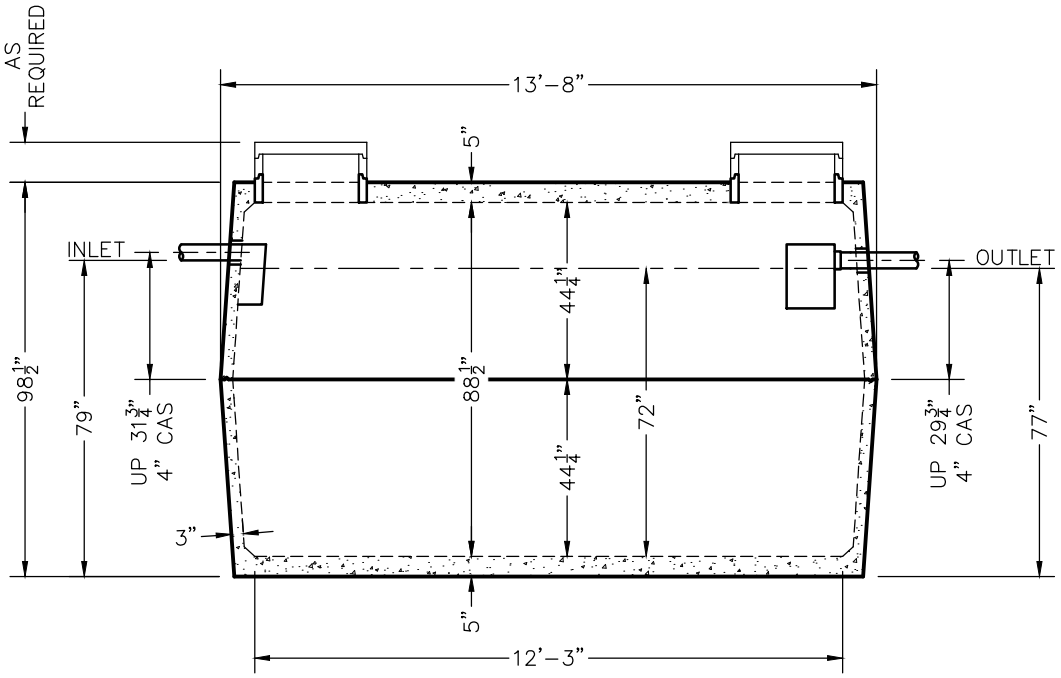


SIDE VIEW

DIMENSIONS:
- WALL: 3"
- BOTTOM: 5"
- COVER: 5"
- MANHOLE: 24" I.D. PRECAST CONCRETE RISER
- HEIGHT: 98 1/2"
- LENGTH: 13'-8"
- WIDTH: 8'-0"
- BELOW INLET: 79"
- LIQUID LEVEL: 72"
- WEIGHT: 13,200 LBS. PER SECTION

INLET AND OUTLET:
- 4" CAST-A-SEAL BOOT OR EQUAL GASKET

INLET AND OUTLET BAFFLE AND FILTER:
- WISCONSIN, SEE DETAIL #10
- (OTHER STATES SEE CHART)

LIQUID CAPACITY: 58.85 GAL/IN

HOLDING TANK:
- OUTLET HOLE PLUGGED
- ACTUAL CAPACITY: 4,355 GALLONS

LOADING DESIGN: 8'-0" UNSATURATED SOIL

TANK CAN BE USED AS:
- SEPTIC / HOLDING / PUMP OR SIPHON

TANK: MIX DESIGN #9 (SMALL FIBER)

CUSTOMIZED TANKS:
- FOR CUSTOM TANKS CONTACT WIESER CONCRETE

REVIEWED BY _____

REVIEW DATE _____

DRAWINGS SUBMITTED FOR APPROVAL

APPROVED BY: _____

APPROVAL DATE: _____

PRODUCTS NEEDED BY: _____

TANKS ARE MANUFACTURED TO MEET OR EXCEED ASTM C-1227 REQUIREMENTS

PRE-POUR: POST-POUR:

SCALE: 1/4" = 1'-0" | REV. | DATE:

DRAWN BY: WCP

DATE: 00/00/00

FILE: w4200


WIESER CONCRETE
W3716 US HWY 10, MAIDEN ROCK, WI 54750
800-325-8456


W4200
SEPTIC MANUAL

SHEET NO. 1 OF 1

# Polylok Riser Installation Instructions

To ensure the desired safety and performance from the Polylok riser system, the riser and cover must be installed properly. Below is a list of instructions that must be followed to achieve a successful watertight installation. It is important to follow these instructions closely, as the failure to do so may result in serious personal injury or death. Should you have any questions about these instructions, please contact us at [https://www.polylok.com/contact] and/or hire a licensed contractor.

1. The most critical joint for water testing purposes is the joint where the riser is cast into the lid of the tank. Visual inspection is required to make sure there are no cracks or gaps between the riser and concrete. Should you find it necessary, seal any areas in question with sealant.

2. Gaskets are installed in all riser covers. Although they are held in place with adhesive, there is always a chance that a gasket could be dislodged or become damaged. These gaskets must be in place if a watertight installation is required. Before attempting an installation, inspect the gaskets in the riser cover. A riser cover with a damaged or missing gasket should not be installed. Should you find a gasket damaged, replace or repair by applying a bead of silicone or butyl mastic over the area in question before attempting an installation.

3. Risers do NOT come with factory installed gaskets. If you are attempting to create a watertight seal, you must install a gasket or butyl to the riser joint. The material you use must cover the full diameter of the riser and adhere completely to the riser. We offer 20" and 24" gaskets should you need a watertight connection. Part numbers are 3008-HR for the 24" gasket and 3009-HR for the 20" gasket.

When adding additional riser sections, use #10 x 1.5" square drive stainless steel square drive screws to fasten the sections together. ALL screws must be installed in each riser section and cover to ensure a watertight connection. The structural integrity of the risers is dependent on all screws being installed properly. The maximum torque for #10 screws is 16 IN LBF (inch pounds of force) or 1.8 N-M (newton meters) Or handtight using a handheld screwdriver. Failure to do this could cause the riser sections to compromise the seals and possibly fail. **Note:** The maximum torque for # 12 screws is 20 IN LBF or 2.26 N-M.

4. Use an alternate screw tightening pattern to ensure even pressure on the risers and cover. Failure to do this could cause the riser sections to compromise the seals and possibly fail.

5. Should a riser boss (internal riser ribbing) crack when screwing riser sections together, use a new riser boss to screw the sections together.

6. Once the appropriate number of risers have been installed, install and screw down the cover before backfilling. Distribute the fill as evenly as possible around the riser as it is brought up to grade. Excessive lateral pressure on the riser column during installation can cause deformation or failure of the riser sections. Proper compaction is also important to minimize the shifting and undue stress on the riser column in the future.

7. Each riser section has a ring around the outside. In cold weather climates where frost heaves may occur, this ring needs to be removed. This should be done to each riser section before it is screwed in place. This can be done by running a knife between the ring and the riser. This will separate the two pieces so that the ring can be removed.

8. Although the Polylok risers and covers are very strong, it should be noted that they are not rated for H-20 loading. We have had risers tested to accept a uniform load of 6,000 lbs. and covers center load tested at 2,500 lbs. Risers should not be buried more than 3 feet below grade.

9. Polylok's Safety Screens should be used for installations near children and pets. Safety Screens act as a secondary layer of protection if the riser cover is damaged or removed. The screen fits in the upper most riser stack of our Polylok Risers and prevents entry into the septic tank. [https://www.youtube.com/watch?v=7hmR3-vOrWU]

THIS PRODUCT MUST BE INSTALLED IN ACCORDANCE WITH THE APPLICABLE INSTALLATION CODE BY A PERSON FAMILIAR WITH THE CONSTRUCTION AND OPERATION OF THE PRODUCT AND THE HAZARDS INVOLVED.

POLYLOK EXCLUDES AND DISCLAIMS ALL WARRANTIES FOR THIS PRODUCT, EXPRESS OR IMPLIED, INCLUDING BUT NOT LIMITED TO THE IMPLIED WARRANTIES OR MERCHANTABILITY AND FITNESS FOR A PARTICULAR PURPOSE.

POLYLOK™ Inc.
Innovations in Precast, Drainage & Wastewater Products
Zabel® A Division of Polylok Inc.
3 Fairfield Boulevard, Wallingford, Connecticut 06492
Office: 1-877-765-9565 Fax: 203-284-8514
email: sales@polylok.com
Web site: www.polylok.com

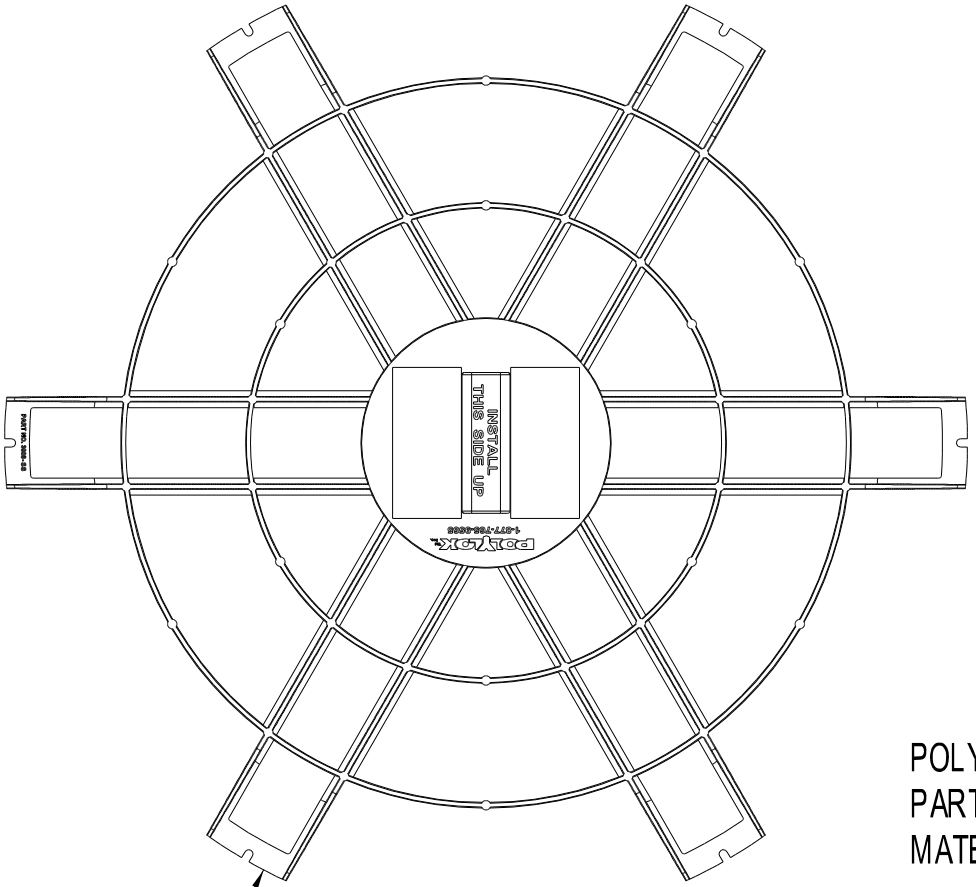


Ø 25.08

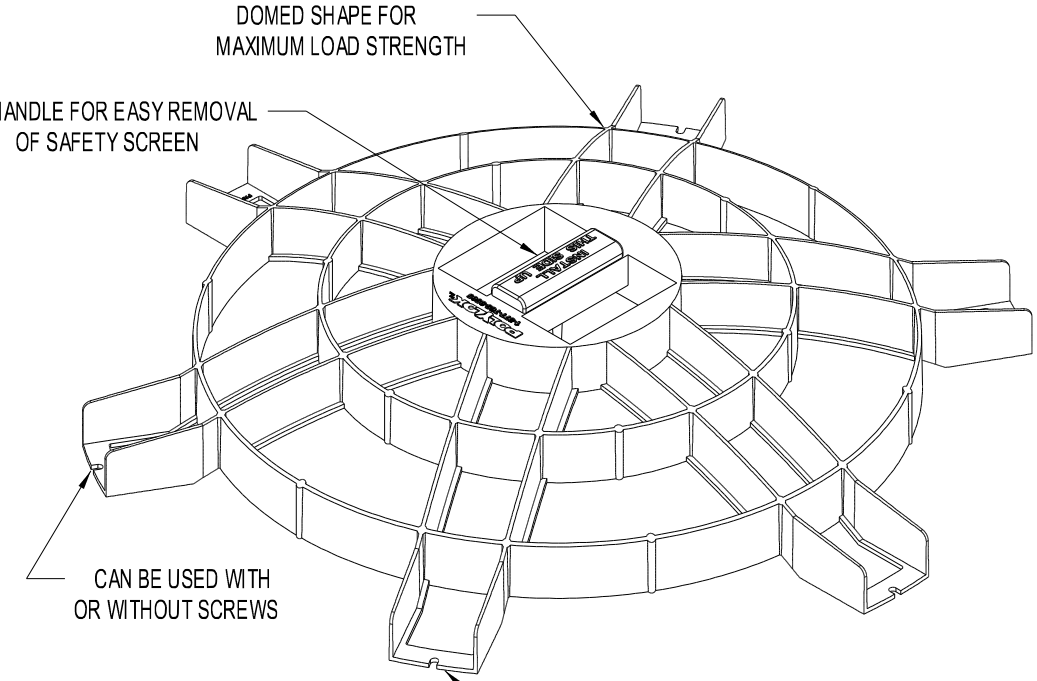


# POLYLOK 24" SAFETY SCREEN
PART NO. - 3008-SS
MATERIAL - ABS

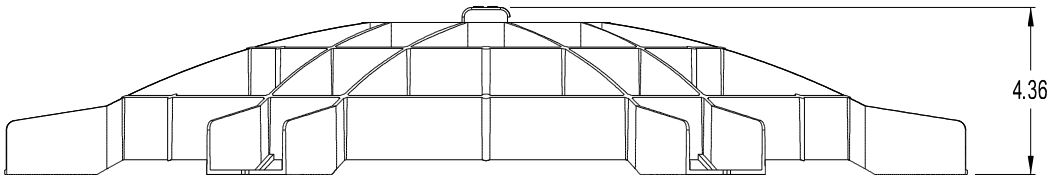


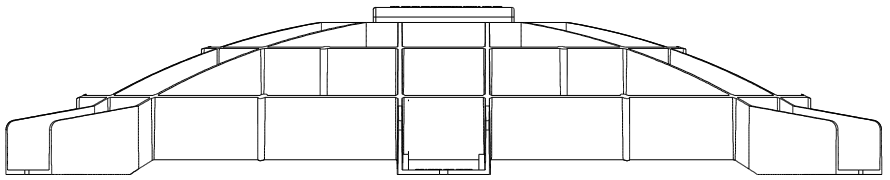

xylem
Let's Solve Water

**TECHNICAL BROCHURE**
B3885 R3

# WE Series
## Model 3885

SUBMERSIBLE EFFLUENT PUMPS

BUILT IN THE USA
ENGINEERED, ASSEMBLED & TESTED

GOULDS WATER TECHNOLOGY
a xylem brand

## FEATURES

**Impeller:** Cast iron, semi-open, non-clog with pump-out vanes for mechanical seal protection. Balanced for smooth operation. Silicon bronze impeller available as an option.

**Casing:** Cast iron volute type for maximum efficiency. 2" NPT discharge.

**Mechanical Seal:** Silicon Carbide vs. Silicon Carbide sealing faces. Stainless steel metal parts, BUNA-N elastomers.

**Shaft:** Corrosion-resistant, stainless steel. Threaded design. Locknut on all models to guard against component damage on accidental reverse rotation.

**Fasteners:** 300 series stainless steel.

Capable of running dry without damage to components.

Designed for continuous operation when fully submerged.

EXTENDED WARRANTY AVAILABLE FOR RESIDENTIAL APPLICATIONS.

## APPLICATIONS

Specifically designed for the following uses:

- Homes, Farms, Trailer Courts, Motels, Schools, Hospitals, Industry, Effluent Systems

## SPECIFICATIONS

### Pump

- Solids handling capabilities: ¾" maximum
- Discharge size: 2" NPT
- Capacities: up to 140 GPM
- Total heads: up to 128 feet TDH
- Temperature: 104°F (40°C) continuous, 140°F (60°C) intermittent.
- See order numbers on reverse side for specific HP, voltage, phase and RPM's available.

## MOTORS

- Fully submerged in high-grade turbine oil for lubrication and efficient heat transfer.
- Class B insulation on ⅓ – 1½ HP models.
- Class F insulation on 2 HP models.

### Single phase (60 Hz):

- Capacitor start motors for maximum starting torque.
- Built-in overload with automatic reset.
- SJTOW or STOW severe duty oil and water resistant power cords.
- ⅓ – 1 HP models have NEMA three prong grounding plugs.
- 1½ HP and larger units have bare lead cord ends.

### Three phase (60 Hz):

- Class 10 overload protection must be provided in separately ordered starter unit.
- STOW power cords all have bare lead cord ends.
- Designed for Continuous Operation: Pump ratings are within the motor manufacturer's recommended working limits, can be operated continuously without damage when fully submerged.
- Bearings: Upper and lower heavy duty ball bearing construction.
- Power Cable: Severe duty rated, oil and water resistant. Epoxy seal on motor end provides secondary moisture barrier in case of outer jacket damage and to prevent oil wicking. Standard cord is 20'. Optional lengths are available.
- O-ring: Assures positive sealing against contaminants and oil leakage.

## AGENCY LISTINGS

Tested to UL 778 and CSA 22.2 108 Standards
By Canadian Standards Association File #LR38549

POLYLOK™ Inc.
Innovations in Precast, Drainage & Wastewater Products
Zabel® A Division of Polylok Inc.

# PL-525 Effluent Filter

## PL-525 Filter

The PL-525 Filter is rated for 10,000 GPD (gallons per day) making it one of the largest filters in its class. It has 525 linear feet of 1/16" filtration slots. Like the Polylok PL-122, the Polylok PL-525 has an automatic shut-off ball installed with every filter. When the filter is removed for cleaning, the ball will float up and temporarily shut off the system so the effluent won't leave the tank.

### Features:

- Rated for 10,000 GPD (gallons per day).
- 525 linear feet of 1/16" filtration.
- Accepts 4'' and 6'' SCHD 40 pipe.
- Built in gas deflector.
- Automatic shut-off ball when filter is removed.
- Alarm accessibility.
- Accepts PVC extension handle.

### PL-525 Installation:

Ideal for residential and commercial waste flows up to 10,000 gallons per day (GPD).

1. Locate the outlet of the septic tank.
2. Remove the tank cover and pump tank if necessary.
3. Glue the filter housing to the 4" or 6" outlet pipe. If the filter is not centered under the access opening use a Polylok Extend & Lok or piece of pipe to center filter.
4. Insert the PL-525 filter into its housing.
5. Replace and secure the septic tank cover.

### PL-525 Maintenance:

The PL-525 Effluent Filters will operate efficiently for several years under normal conditions before requiring cleaning. It is recommended that the filter be cleaned every time the tank is pumped, or at least every three years. If the installed filter contains an optional alarm, the owner will be notified by an alarm when the filter needs servicing. Servicing should be done by a certified septic tank pumper or installer.

1. Locate the outlet of the septic tank.
2. Remove tank cover and pump tank if necessary.
3. Do not use plumbing when filter is removed.
4. Pull PL-525 cartridge out of the housing.
5. Hose off filter over the septic tank. Make sure all solids fall back into septic tank.
6. Insert the filter cartridge back into the housing making sure the filter is properly aligned and completely inserted.
7. Replace and secure septic tank cover.

**Outdoor SmartFilter® Alarm**
Polylok, Zabel & Best filters accept the SmartFilter® switch and alarm.

**Extend & Lok™**
Easily installs into existing tanks.

Polylok, Inc. 3 Fairfield Blvd. Wallingford, CT 06492 Toll Free: 877.765.9565 Fax: 203.284.8514 www.polylok.com

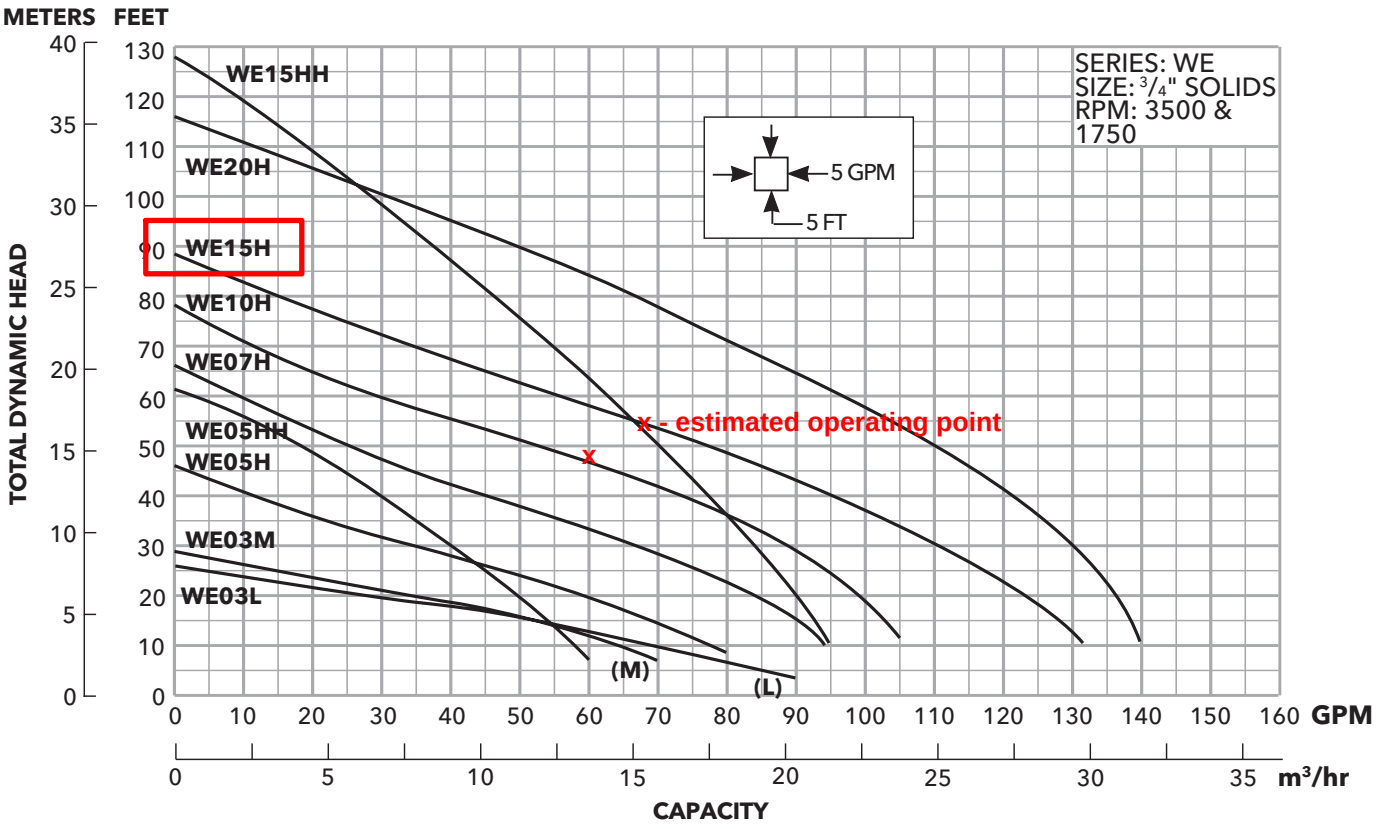


## COMPONENTS

| Item No. | Description |
|---|---|
| 1 | Impeller |
| 2 | Casing |
| 3 | Mechanical Seal |
| 4 | Motor Shaft |
| 5 | Motor |
| 6 | Ball Bearings |
| 7 | Power Cable |
| 8 | Casing O-Ring |

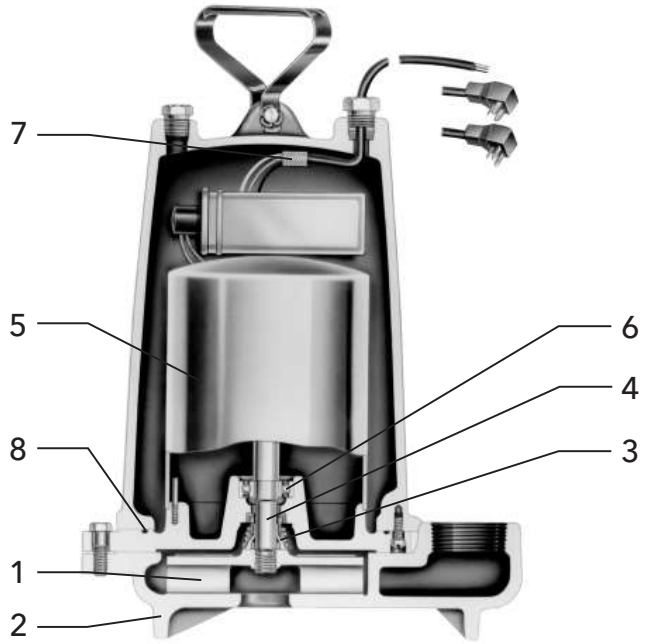

## MODELS

| Order Number | HP | Phase | Volts | RPM | Impeller Diameter (in.) | Maximum Amps | Locked Rotor Amps | KVA Code | Full Load Efficiency % | Resistance | | Power Cable Size | Weight (lbs.) |
|---|---|---|---|---|---|---|---|---|---|---|---|---|---|
| | | | | | | | | | | Start | Line-Line | | |
| WE0311L | 0.33 | 1 | 115 | 1750 | 5.38 | 10.7 | 30.0 | M | 54 | 11.9 | 1.7 | 16/3 | 56 |
| WE0318L | | | 208 | | | 6.8 | 19.5 | K | 51 | 9.1 | 4.2 | | |
| WE0312L | | | 230 | | | 4.9 | 14.1 | L | 53 | 14.5 | 8.0 | | |
| WE0311M | | | 115 | | | 10.7 | 30.0 | M | 54 | 11.9 | 1.7 | | |
| WE0318M | | | 208 | | | 6.8 | 19.5 | K | 51 | 9.1 | 4.2 | | |
| WE0312M | | | 230 | | | 4.9 | 14.1 | L | 53 | 14.5 | 8.0 | | |
| WE0511H | 0.5 | 1 | 115 | 3450 | 3.56 | 14.5 | 46.0 | M | 54 | 7.5 | 1.0 | 14/3 | 60 |
| WE0518H | | | 208 | | | 8.1 | 31.0 | K | 68 | 9.7 | 2.4 | 16/3 | |
| WE0512H | | | 230 | | | 7.3 | 34.5 | M | 53 | 9.6 | 4.0 | | |
| WE0538H | | 3 | 200 | | | 4.9 | 22.6 | R | 68 | NA | 3.8 | 14/4 | |
| WE0532H | | | 230 | | | 3.3 | 18.8 | R | 70 | NA | 5.8 | | |
| WE0534H | | | 460 | | | 1.7 | 9.4 | R | 70 | NA | 23.2 | | |
| WE0537H | | | 575 | | | 1.4 | 7.5 | R | 62 | NA | 35.3 | | |
| WE0511HH | | 1 | 115 | | 3.88 | 14.5 | 46.0 | M | 54 | 7.5 | 1.0 | 14/3 | |
| WE0518HH | | | 208 | | | 8.1 | 31.0 | K | 68 | 9.7 | 2.4 | 16/3 | |
| WE0512HH | | | 230 | | | 7.3 | 34.5 | M | 53 | 9.6 | 4.0 | | |
| WE0538HH | | 3 | 200 | | | 4.9 | 22.6 | R | 68 | NA | 3.8 | 14/4 | |
| WE0532HH | | | 230 | | | 3.6 | 18.8 | R | 70 | NA | 5.8 | | |
| WE0534HH | | | 460 | | | 1.8 | 9.4 | R | 70 | NA | 23.2 | | |
| WE0537HH | | | 575 | | | 1.5 | 7.5 | R | 62 | NA | 35.3 | | |
| WE0718H | 0.75 | 1 | 208 | | 4.06 | 11.0 | 31.0 | K | 68 | 9.7 | 2.4 | 14/3 | 70 |
| WE0712H | | | 230 | | | 10.0 | 27.5 | J | 65 | 12.2 | 2.7 | | |
| WE0738H | | 3 | 200 | | | 6.2 | 20.6 | L | 64 | NA | 5.7 | 14/4 | |
| WE0732H | | | 230 | | | 5.4 | 15.7 | K | 68 | NA | 8.6 | | |
| WE0734H | | | 460 | | | 2.7 | 7.9 | K | 68 | NA | 34.2 | | |
| WE0737H | | | 575 | | | 2.2 | 9.9 | L | 78 | NA | 26.5 | | |
| WE1018H | 1 | 1 | 208 | | 4.44 | 14.0 | 59.0 | K | 68 | 9.3 | 1.1 | 14/3 | |
| WE1012H | | | 230 | | | 12.5 | 36.2 | J | 69 | 10.3 | 2.1 | | |
| WE1038H | | 3 | 200 | | | 8.1 | 37.6 | M | 77 | NA | 2.7 | 14/4 | |
| WE1032H | | | 230 | | | 7.0 | 24.1 | L | 79 | NA | 4.1 | | |
| WE1034H | | | 460 | | | 3.5 | 12.1 | L | 79 | NA | 16.2 | | |
| WE1037H | | | 575 | | | 2.8 | 9.9 | L | 78 | NA | 26.5 | | |
| WE1518H | 1.5 | 1 | 208 | | 4.56 | 17.5 | 59.0 | K | 68 | 9.3 | 1.1 | 14/3 | 80 |
| WE1512H | | | 230 | | | 15.7 | 50.0 | H | 68 | 11.3 | 1.6 | | |
| WE1538H | | 3 | 200 | | | 10.6 | 40.6 | K | 79 | NA | 1.9 | 14/4 | |
| WE1532H | | | 230 | | | 9.2 | 31.7 | K | 78 | NA | 2.9 | | |
| WE1534H | | | 460 | | | 4.6 | 15.9 | K | 78 | NA | 11.4 | | |
| WE1537H | | | 575 | | | 3.7 | 13.1 | K | 75 | NA | 16.9 | | |
| WE1518HH | | 1 | 208 | | 5.50 | 17.5 | 59.0 | K | 68 | 9.3 | 1.1 | 14/3 | |
| WE1512HH | | | 230 | | | 15.7 | 50.0 | H | 68 | 11.3 | 1.6 | | |
| WE1538HH | | 3 | 200 | | | 10.6 | 40.6 | K | 79 | NA | 1.9 | 14/4 | |
| WE1532HH | | | 230 | | | 9.2 | 31.7 | K | 78 | NA | 2.9 | | |
| WE1534HH | | | 460 | | | 4.6 | 15.9 | K | 78 | NA | 11.4 | | |
| WE1537HH | | | 575 | | | 3.7 | 13.1 | K | 75 | NA | 16.9 | | |
| WE2012H | 2 | 1 | 230 | | 5.38 | 18.0 | 49.6 | F | 78 | 3.2 | 1.2 | 14/3 | 83 |
| WE2038H | | 3 | 200 | | | 12.0 | 42.4 | K | 78 | NA | 1.7 | 14/4 | |
| WE2032H | | | 230 | | | 11.6 | 42.4 | K | 78 | NA | 1.7 | | |
| WE2034H | | | 460 | | | 5.8 | 21.2 | K | 78 | NA | 6.6 | | |
| WE2037H | | | 575 | | | 4.7 | 16.3 | L | 78 | NA | 10.5 | | |

## PERFORMANCE RATINGS (gallons per minute)

| Order No. | | WE-03L | WE-03M | WE-05H | WE-07H | WE-10H | WE-15H | WE05HH | WE15HH | WE-20H |
|---|---|---|---|---|---|---|---|---|---|---|
| Total Head Feet of Water | **HP** | ⅓ | ⅓ | ½ | ¾ | 1 | 1½ | ½ | 1½ | 2 |
| | **RPM** | 1750 | 1750 | 3500 | 3500 | 3500 | 3500 | 3500 | 3500 | 3500 |
| | 5 | 86 | – | – | – | – | – | – | – | – |
| | 10 | 70 | 63 | 78 | 94 | – | – | 58 | 95 | – |
| | 15 | 52 | 52 | 70 | 90 | 103 | 128 | 53 | 93 | 138 |
| | 20 | 27 | 35 | 60 | 83 | 98 | 123 | 49 | 90 | 136 |
| | 25 | 5 | 15 | 48 | 76 | 94 | 117 | 45 | 87 | 133 |
| | 30 | – | – | 35 | 67 | 88 | 110 | 40 | 83 | 130 |
| | 35 | – | – | 22 | 57 | 82 | 103 | 35 | 80 | 126 |
| | 40 | – | – | – | 45 | 74 | 95 | 30 | 77 | 121 |
| | 45 | – | – | – | 35 | 64 | 86 | 25 | 74 | 116 |
| | 50 | – | – | – | 25 | 53 | 77 | – | 70 | 110 |
| | 55 | – | – | – | – | 40 | 67 | – | 66 | 103 |
| | 60 | – | – | – | – | 30 | 56 | – | 63 | 96 |
| | 65 | – | – | – | – | 20 | 45 | – | 58 | 89 |
| | 70 | – | – | – | – | – | 35 | – | 55 | 81 |
| | 75 | – | – | – | – | – | 25 | – | 51 | 74 |
| | 80 | – | – | – | – | – | – | – | 47 | 66 |
| | 90 | – | – | – | – | – | – | – | 37 | 49 |
| | 100 | – | – | – | – | – | – | – | 28 | 30 |

## DIMENSIONS

(All dimensions are in inches. Do not use for construction purposes.)

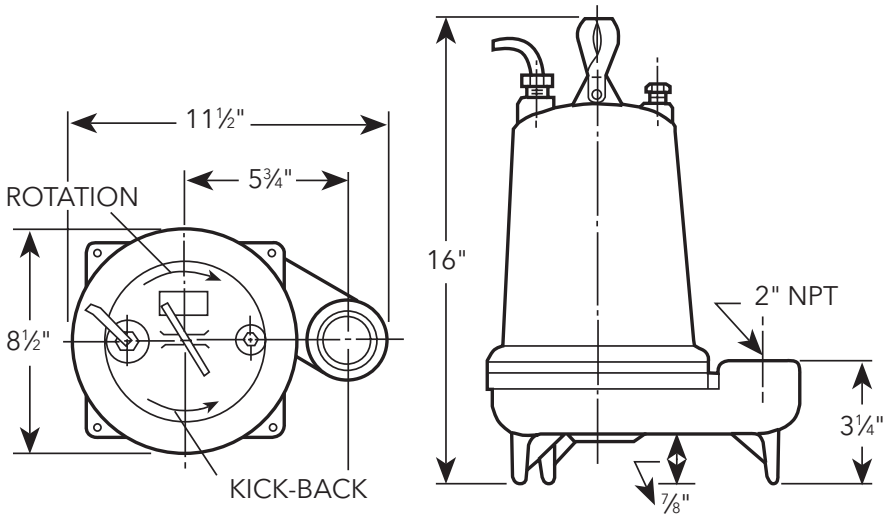

## STANDARD PANEL OPTIONS

| Pump Order Number | K Series | | Boulay Series | |
|---|---|---|---|---|
| | Simplex | Duplex | Simplex | Duplex |
| WE0311L | KS19020WF | KD19020WF | S10020 | D10020 |
| WE0318L | KS19020WF | KD19020WF | S10020 | D10020 |
| WE0312L | KS19020WF | KD19020WF | S10020 | D10020 |
| WE0311M | KS19020WF | KD19020WF | S10020 | D10020 |
| WE0318M | KS19020WF | KD19020WF | S10020 | D10020 |
| WE0312M | KS19020WF | KD19020WF | S10020 | D10020 |
| WE0511H | KS19020WF | KD19020WF | S10020 | D10020 |
| WE0518H | KS19020WF | KD19020WF | S10020 | D10020 |
| WE0512H | KS19020WF | KD19020WF | S10020 | D10020 |
| WE0538H | KS31255WF | KD31255WF | S34063 | D34063 |
| WE0532H | KS31255WF | KD31255WF | S32540 | D32540 |
| WE0534H | KS31255WF | KD31255WF | S31625 | D31625 |
| WE0537H | N/A | N/A | S31625 | D31625 |
| WE0511HH | KS19020WF | KD19020WF | S10020 | D10020 |
| WE0518HH | KS19020WF | KD19020WF | S10020 | D10020 |
| WE0512HH | KS19020WF | KD19020WF | S10020 | D10020 |
| WE0538HH | KS31255WF | KD31255WF | S34063 | D34063 |
| WE0532HH | KS31255WF | KD31255WF | S32540 | D32540 |
| WE0534HH | KS31255WF | KD31255WF | S31625 | D31625 |
| WE0537HH | N/A | N/A | S31625 | D31625 |
| WE0718H | KS19020WF | KD19020WF | S10020 | D10020 |
| WE0712H | KS19020WF | KD19020WF | S10020 | D10020 |
| WE0738H | KS34518WF | KD34518WF | S36310 | D36310 |
| WE0732H | KS34518WF | KD34518WF | S34063 | D34063 |
| WE0734H | KS31255WF | KD31255WF | S32540 | D32540 |
| WE0737H | N/A | N/A | S31625 | D31625 |
| WE1018H | KS19020WF | KD19020WF | S10020 | D10020 |
| WE1012H | KS19020WF | KD19020WF | S10020 | D10020 |
| WE1038H | KS34518WF | KD34518WF | S36310 | D36310 |
| WE1032H | KS34518WF | KD34518WF | S36310 | D36310 |
| WE1034H | KS34518WF | KD34518WF | S32540 | D32540 |
| WE1037H | N/A | N/A | S32540 | D32540 |
| WE1518H | KS19020WF | KD19020WF | S10020 | D10020 |
| WE1512H | KS19020WF | KD19020WF | S10020 | D10020 |
| WE1538H | KS34518WF | KD34518WF | S31016 | D31016 |
| WE1532H | KS34518WF | KD34518WF | S36310 | D36310 |
| WE1534H | KS34518WF | KD34518WF | S34063 | D34063 |
| WE1537H | N/A | N/A | S32540 | D32540 |
| WE1518HH | KS19020WF | KD19020WF | S10020 | D10020 |
| WE1512HH | KS19020WF | KD19020WF | S10020 | D10020 |
| WE1538HH | KS34518WF | KD34518WF | S31016 | D31016 |
| WE1532HH | KS34518WF | KD34518WF | S36310 | D36310 |
| WE1534HH | KS34518WF | KD34518WF | S34063 | D34063 |
| WE1537HH | N/A | N/A | S32540 | D32540 |
| WE2012H | KS19020WF | KD19020WF | S10020 | D10020 |
| WE2038H | KS34518WF | KD34518WF | S31016 | D31016 |
| WE2032H | KS34518WF | KD34518WF | S31016 | D31016 |
| WE2034H | KS34518WF | KD34518WF | S34063 | D34063 |
| WE2037H | N/A | N/A | S34063 | D34063 |

**Note:** Boulay Series part numbers have additional available features, see page 7 for more information.

**Note:** K Series panel part numbers include floats, to order without float switches, remove the 'WF' suffix. Boulay Series panels do not include float switches.

**K-SERIES**

- NEMA 4X dead front outdoor rated enclosure
- Red LED alarm beacon
- HOA selector switch
- Field wiring terminal block
- Single phase models handle 120, 208 and 230V service
- Three phase models handle 200, 230 and 460V service
- Requires separate control/alarm power feed
- See brochure "BCPKSDPANELS" for additional information

**BOULAY SERIES**

- NEMA 4X outdoor rated enclosure
- Red alarm beacon
- HOA selector switch
- Through door pump run light(s)
- Through door alarm test and horn silence button
- Single phase models handle 120, 208 and 230V service
- Three phase models handle 200, 230, 460 and 575V service
- Accepts single or dual power feed
- See brochure "BCP3 R11" for additional information on simplex models
- See brochure "BCP4 R14" for additional information on duplex models

# Xylem |'zīləm|

1) The tissue in plants that brings water upward from the roots;
2) a leading global water technology company.

We're a global team unified in a common purpose: creating advanced technology solutions to the world's water challenges. Developing new technologies that will improve the way water is used, conserved, and re-used in the future is central to our work. Our products and services move, treat, analyze, monitor and return water to the environment, in public utility, industrial, residential and commercial building services settings. Xylem also provides a leading portfolio of smart metering, network technologies and advanced analytics solutions for water, electric and gas utilities. In more than 150 countries, we have strong, long-standing relationships with customers who know us for our powerful combination of leading product brands and applications expertise with a strong focus on developing comprehensive, sustainable solutions.

**For more information on how Xylem can help you, go to www.xyleminc.com**

xylem
Let's Solve Water

Xylem Inc.
2881 East Bayard Street Ext., Suite A
Seneca Falls, NY 13148
Phone: (866) 325-4210
Fax: (888) 322-5877
www.xylem.com/goulds

Goulds is a registered trademark of Goulds Pumps, Inc. and is used under license.
© 2019 Xylem Inc. B3885 R3 June 2019

# EZ Series® In-Site®
## with SUB-X™ LT or C-Level™ Sensor

### Installation and Operation Manual

US Patent Nos. 10,251,284 B2; 8,336,385; 8,567,242 and 8,650,949

c UL us LISTED

Control Panel

SUB-X™ LT or C-Level™ Sensor

**Recommended**

High Alarm Float

Redundant Off Float

**WARNING!**

**ELECTRICAL SHOCK HAZARD**
Disconnect all power sources before servicing. Failure to do so could result in serious injury or death.

This control panel must be installed and serviced by a licensed electrician in accordance with the National Electric Code NFPA-70, state and local electrical codes. UL Type 4X enclosures are for indoor or outdoor use.

**Warranty void if panel is modified.**

**For information regarding operation, available options, or servicing questions, please call SJE Rhombus Technical Support.**

SJE Rhombus offers a five-year limited warranty on the control panel and a two-year limited warranty on the SUB-X™ LT or C-Level™ sensor. For complete terms and conditions, please visit **www.sjerhombus.com**.

Products returned must be cleaned, sanitized, or decontaminated as necessary prior to shipment to ensure that employees will not be exposed to health hazards in handling said material. All applicable laws and regulations shall apply.

**Manufactured by:**
SJE Rhombus
Detroit Lakes, MN, USA

Technical Support: +1 800-746-6287
techsupport@sjerhombus.com
**www.sjerhombus.com**

## Mounting the Control Panel

**1** Install top fastener using appropriate anchor.

**2** Install bottom fastener(s) using appropriate anchors.

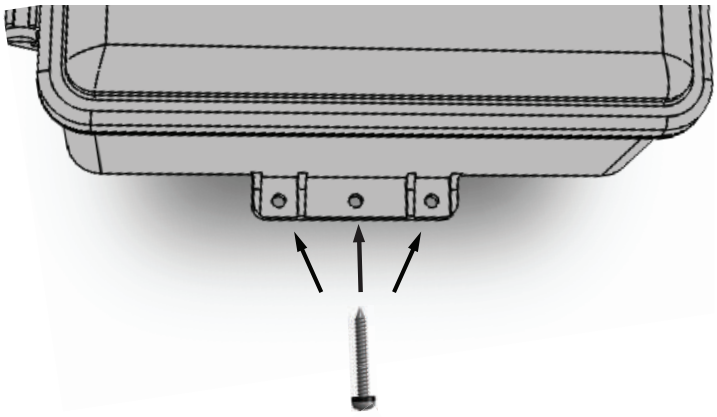

## Installing the SUB-X™ LT or C-Level™ Sensor & Recommended Float Switches

The EZ Series® In-Site® CL control panel operates with a SUB-X™ LT or C-Level™ sensor and 1 or 2 recommended float switches. The SUB-X™ LT or C-Level™ sensor operates the Pump Start, Stop and Alarm functions. The back-up float switches are for redundant off and high level alarm.

**⚠WARNING!**

Ensure all supply power to the control panel is turned OFF before installing or servicing the SUB-X™ LT or C-Level™ sensor, float switches, or pumps in the tank. Failure to do so could result in serious or fatal shock.

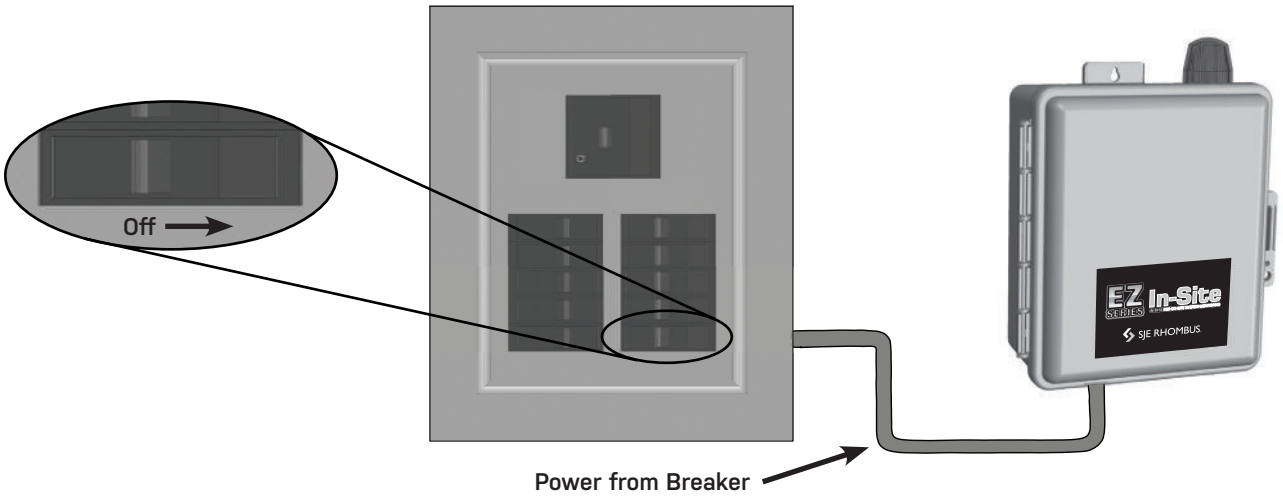


**NOTE**

Do not run SUB-X™ LT or C-Level™ sensor cable or float switch cables in the same conduit as the pump cables.

## SUB-X™ LT or C-Level™ Sensor Sensor Positioning

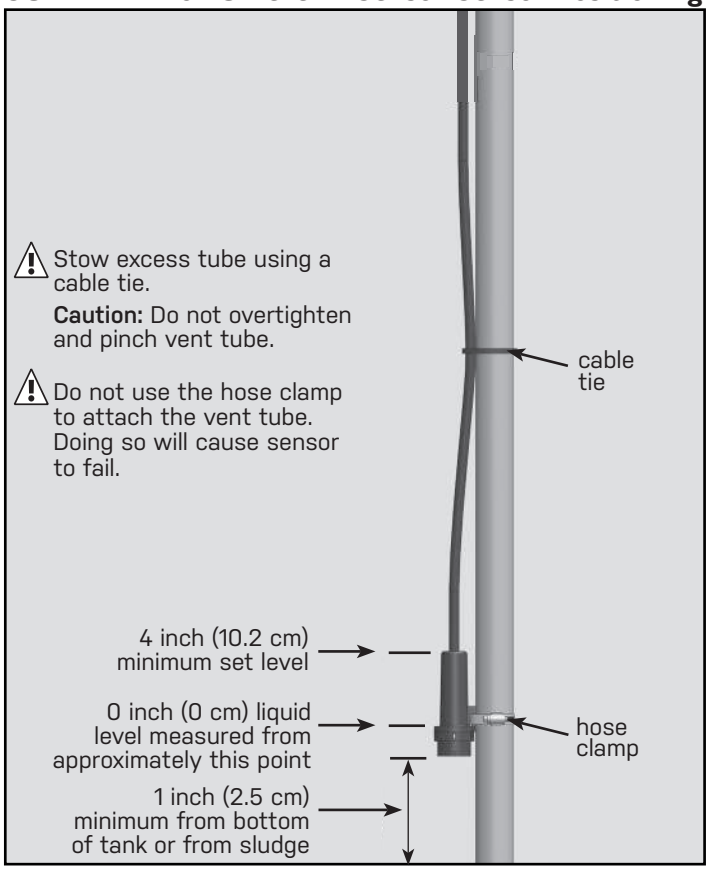


## Float Switch Positioning

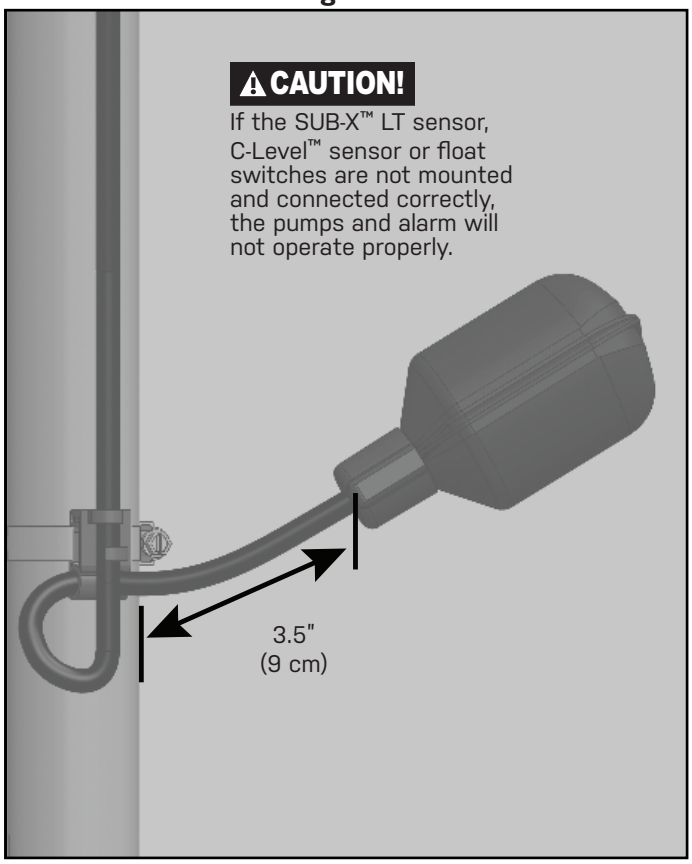


## Timed Dose

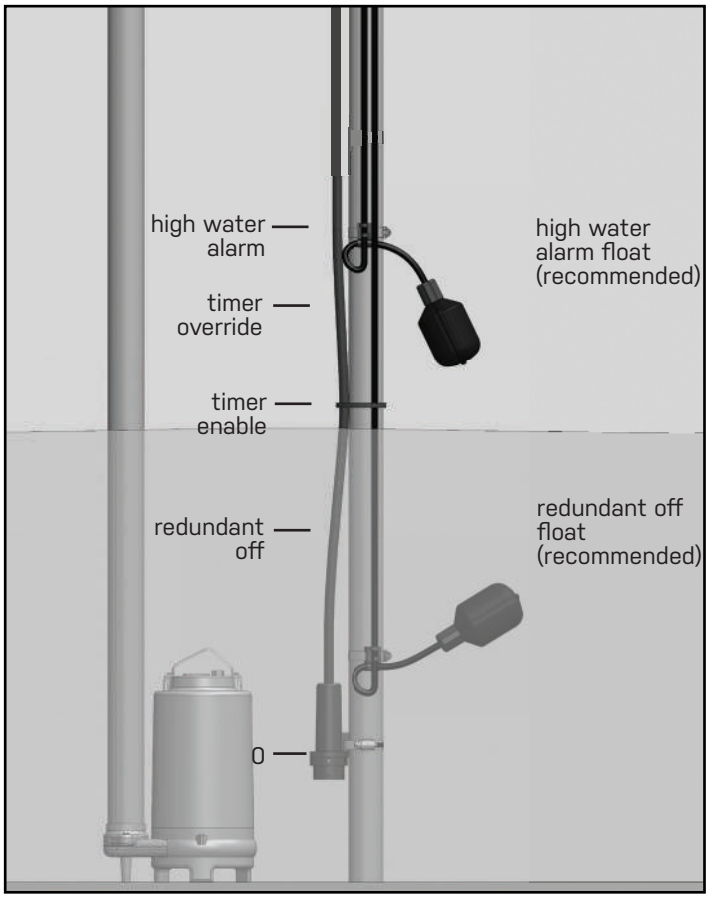


## Demand Dose

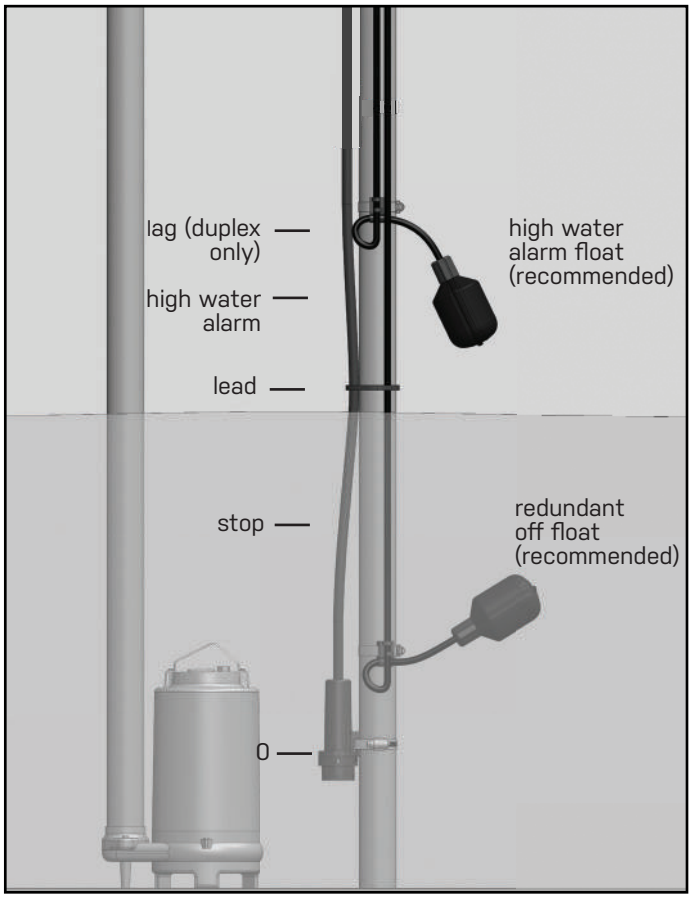

## Wiring the Control Panel

**1** Locate conduit entrance at the bottom of the enclosure as shown. Check local codes for the number of power circuits required. The schematic is located on the inside cover of the control panel.

**⚠ CAUTION!**

Be sure the incoming voltage is the same as the pump motor nameplate.

Providing separate pump and control/alarm power sources is recommended.

Type 4X conduit must be used to maintain a Type 4X rating of the control panel.

**2** Connect the following wires to the proper terminals:

- incoming power for each pump circuit breaker
- incoming power for control/alarm
- pump 1
- pump 2 (duplex only)
- SUB-X™ LT or C-Level™ sensor
- float switches (recommended)

See schematic label on inside cover of the control panel for details.

**3** Verify correct operation of control panel after installation is complete.

## Setup and Operation

EZ Series® In-Site® control panels are designed for pump control and system monitoring via a Bluetooth® wireless connection. The EZ Series® In-Site® App must be used to configure the control panel.

### App download available on:

Download on the App Store

GET IT ON Google Play

EZ In-Site Connect

** Apple and the Apple Logo are registered trademarks of Apple Inc. Google Play and the Google Play logo are trademarks of Google LLC.

## Changing Sensor Mode

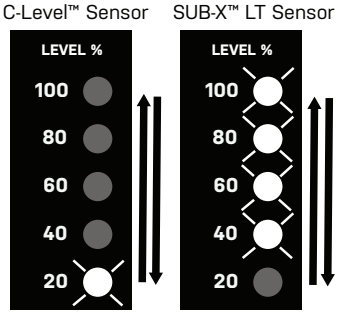


1. Press and hold the panel TEST/SILENCE pushbutton, then apply control/alarm power.
   - Single level indicator on chases up and down to indicate current mode is set to C-Level™ Sensor.
   - Single level indicator off chases up and down to indicate current mode is set to SUB-X™ LT sensor.
2. Continue to hold the TEST/SILENCE pushbutton as level indicator chase changes state.
3. Release the TEST/SILENCE pushbutton when the level indicator chase ceases and alarm beacon lights. This takes approximately 25 seconds to complete.
4. Sensor mode change is complete.

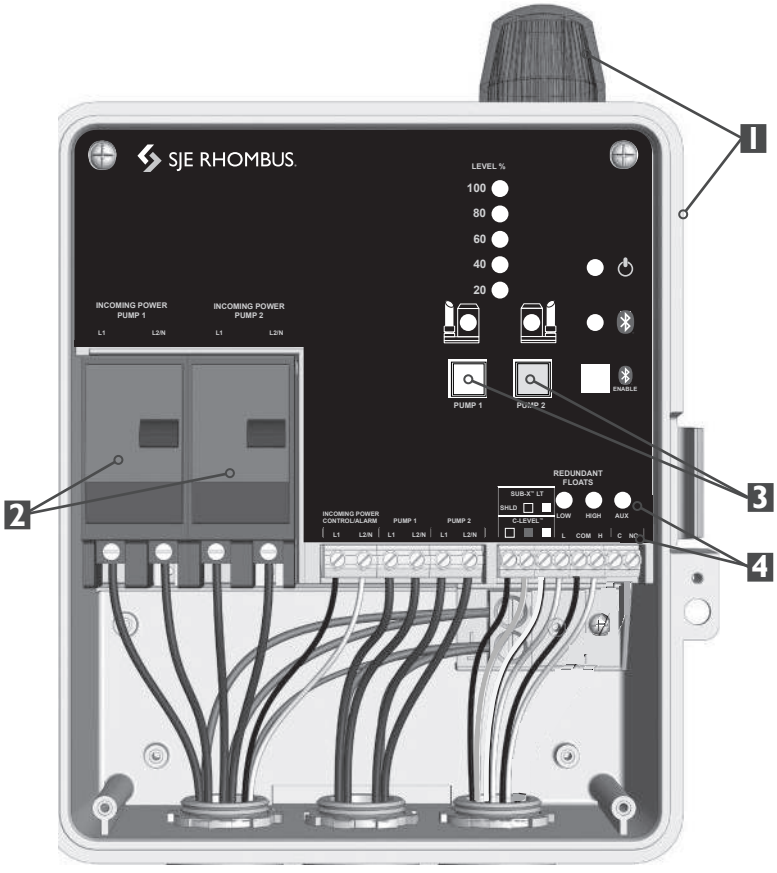


Duplex Model Shown

**⚠ CAUTION!** Seal the electrical conduit with an approved sealing compound to prevent moisture or gases from entering into the control panel.

**1 Alarm System (Indicator Light and Horn)**
When an alarm condition occurs, the red light and horn will be activated.

If the TEST/SILENCE button is pressed and released, the horn will be silenced. When the alarm condition is cleared, the alarm system is reset.

**2 Circuit Breakers**
Each pump circuit has a thermal-magnetic circuit breaker that provides branch circuit protection and a means to disconnect the pump.

**3 Pump Manual Run Switches**
Push and hold to manually run the pump.

**4 Dry Auxiliary Contacts**
**Normally Open** - Contacts are OPEN under normal conditions and CLOSED when alarm condition is present. OPEN during power loss.
Automatically resets once alarm condition is cleared.
Aux contact rating: 120V, 1A

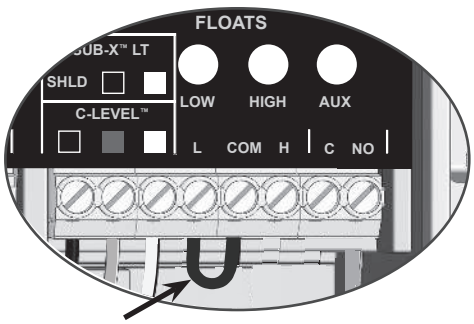


**NOTE** If redundant off float is not used, a jumper must be installed in its place.



PN 1064580E 02/25
© 2020 SJE, Inc. All Rights Reserved.
SJE RHOMBUS is a trademark of SJE, INC.

Map Scale: 1:2,610 if printed on A landscape (11" x 8.5") sheet.

N

Meters: 0 35 70 140 210

Feet: 0 100 200 400 600

Map projection: Web Mercator Corner coordinates: WGS84 Edge tics: UTM Zone 15N WGS84

## MAP LEGEND

**Area of Interest (AOI)**

- Area of Interest (AOI)

**Soils**

- Soil Map Unit Polygons
- Soil Map Unit Lines
- Soil Map Unit Points

**Special Point Features**

- Blowout
- Borrow Pit
- Clay Spot
- Closed Depression
- Gravel Pit
- Gravelly Spot
- Landfill
- Lava Flow
- Marsh or swamp
- Mine or Quarry
- Miscellaneous Water
- Perennial Water
- Rock Outcrop
- Saline Spot
- Sandy Spot
- Severely Eroded Spot
- Sinkhole
- Slide or Slip
- Sodic Spot
- Spoil Area
- Stony Spot
- Very Stony Spot
- Wet Spot
- Other
- Special Line Features

**Water Features**

- Streams and Canals

**Transportation**

- Rails
- Interstate Highways
- US Routes
- Major Roads
- Local Roads

**Background**

- Aerial Photography

## MAP INFORMATION

The soil surveys that comprise your AOI were mapped at 1:15,800.

Warning: Soil Map may not be valid at this scale.

Enlargement of maps beyond the scale of mapping can cause misunderstanding of the detail of mapping and accuracy of soil line placement. The maps do not show the small areas of contrasting soils that could have been shown at a more detailed scale.

Please rely on the bar scale on each map sheet for map measurements.

Source of Map: Natural Resources Conservation Service
Web Soil Survey URL:
Coordinate System: Web Mercator (EPSG:3857)

Maps from the Web Soil Survey are based on the Web Mercator projection, which preserves direction and shape but distorts distance and area. A projection that preserves area, such as the Albers equal-area conic projection, should be used if more accurate calculations of distance or area are required.

This product is generated from the USDA-NRCS certified data as of the version date(s) listed below.

Soil Survey Area: Washington County, Minnesota
Survey Area Data: Version 21, Sep 10, 2025

Soil map units are labeled (as space allows) for map scales 1:50,000 or larger.

Date(s) aerial images were photographed: Mar 1, 2024—Jul 1, 2024

The orthophoto or other base map on which the soil lines were compiled and digitized probably differs from the background imagery displayed on these maps. As a result, some minor shifting of map unit boundaries may be evident.

# Map Unit Legend

| Map Unit Symbol | Map Unit Name | Acres in AOI | Percent of AOI |
|---|---|---|---|
| 8 | Sparta loamy sand, 0 to 2 percent slopes | 4.5 | 33.1% |
| 8B | Sparta loamy sand, 2 to 6 percent slopes | 7.1 | 51.8% |
| 327 | Dickman sandy loam, 0 to 2 percent slopes | 2.1 | 15.1% |
| **Totals for Area of Interest** | | **13.7** | **100.0%** |

# Washington County, Minnesota

## 8B—Sparta loamy sand, 2 to 6 percent slopes

### Map Unit Setting

*National map unit symbol:* 1t936
*Elevation:* 700 to 1,200 feet
*Mean annual precipitation:* 28 to 36 inches
*Mean annual air temperature:* 39 to 48 degrees F
*Frost-free period:* 120 to 170 days
*Farmland classification:* Not prime farmland

### Map Unit Composition

*Sparta and similar soils:* 90 percent
*Minor components:* 10 percent
*Estimates are based on observations, descriptions, and transects of the mapunit.*

### Description of Sparta

#### Setting

*Landform:* Outwash terraces
*Landform position (two-dimensional):* Backslope
*Down-slope shape:* Linear
*Across-slope shape:* Linear
*Parent material:* Sandy glaciofluvial deposits

#### Typical profile

*Ap,AB - 0 to 16 inches:* loamy sand
*Bw - 16 to 28 inches:* loamy sand
*C - 28 to 60 inches:* sand

#### Properties and qualities

*Slope:* 2 to 6 percent
*Depth to restrictive feature:* More than 80 inches
*Drainage class:* Excessively drained
*Capacity of the most limiting layer to transmit water (Ksat):* High (1.98 to 5.95 in/hr)
*Depth to water table:* More than 80 inches
*Frequency of flooding:* None
*Frequency of ponding:* None
*Available water supply, 0 to 60 inches:* Low (about 5.5 inches)

#### Interpretive groups

*Land capability classification (irrigated):* 2e
*Land capability classification (nonirrigated):* 4s
*Hydrologic Soil Group:* A
*Ecological site:* F090AY019WI - Dry Sandy Upland
*Forage suitability group:* Sandy (G090AN022MN)
*Other vegetative classification:* Sandy (G090AN022MN)
*Hydric soil rating:* No

**Minor Components**

**Dickman**
*Percent of map unit:* 4 percent
*Hydric soil rating:* No

**Sparta, bedrock substratum**
*Percent of map unit:* 3 percent
*Hydric soil rating:* No

**Hubbard**
*Percent of map unit:* 3 percent
*Hydric soil rating:* No

# Data Source Information

Soil Survey Area: Washington County, Minnesota
Survey Area Data: Version 21, Sep 10, 2025

DEPARTMENT OF NATURAL RESOURCES

# National Wetland Inventory

Cowardin Classification

- Aquatic Bed/ Nonpersistent Emergent
- Emergent
- Forested
- Moss/Lichen
- Rock Bottom
- Rocky Shore
- Streambed (Intermittent)
- Scrub-Shrub
- Unconsolidated Bottom (Open Water)
- Unconsolidated Shore (Banks & Sandbars)
- Public Waters Basins
- Public Water Watercourse
- Public Ditch/Altered Natural Watercourse

0 0.05 0.1 0.2 mi

Date Printed: 11/05/2025

This map is for general reference only. Neither the state of Minnesota nor the Minnesota Department of Natural Resources make any representations or warranties with respect to the use of or reliance on the data. There are no guarantees as to the accuracy, currency, completeness, suitability or reliability of this data for any purpose.

# National Flood Hazard Layer FIRMette

FEMA

92°53'10"W 44°47'23"N

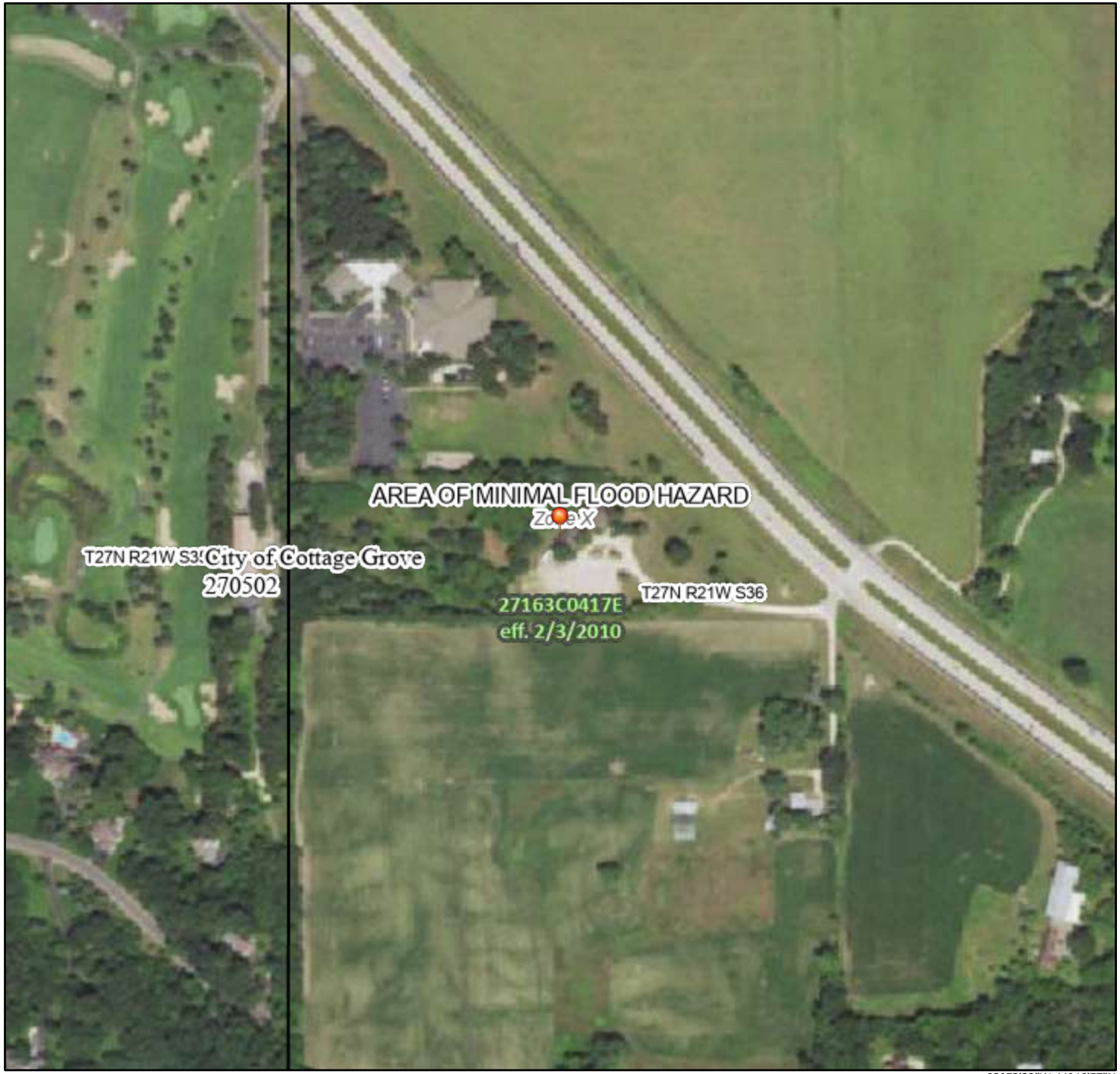


92°52'32"W 44°46'57"N

Feet

0 250 500 1,000 1,500 2,000

1:6,000

*Basemap Imagery Source: USGS National Map 2023*

## Legend

SEE FIS REPORT FOR DETAILED LEGEND AND INDEX MAP FOR FIRM PANEL LAYOUT

**SPECIAL FLOOD HAZARD AREAS**
- Without Base Flood Elevation (BFE) *Zone A, V, A99*
- With BFE or Depth *Zone AE, AO, AH, VE, AR*
- Regulatory Floodway

**OTHER AREAS OF FLOOD HAZARD**
- 0.2% Annual Chance Flood Hazard, Areas of 1% annual chance flood with average depth less than one foot or with drainage areas of less than one square mile *Zone X*
- Future Conditions 1% Annual Chance Flood Hazard *Zone X*
- Area with Reduced Flood Risk due to Levee. See Notes. *Zone X*
- Area with Flood Risk due to Levee *Zone D*

**OTHER AREAS**
- NO SCREEN — Area of Minimal Flood Hazard *Zone X*
- Effective LOMRs
- Area of Undetermined Flood Hazard *Zone D*

**GENERAL STRUCTURES**
- Channel, Culvert, or Storm Sewer
- Levee, Dike, or Floodwall

**OTHER FEATURES**
- 20.2 — Cross Sections with 1% Annual Chance
- 17.5 — Water Surface Elevation
- Coastal Transect
- Base Flood Elevation Line (BFE)
- Limit of Study
- Jurisdiction Boundary
- Coastal Transect Baseline
- Profile Baseline
- Hydrographic Feature

**MAP PANELS**
- Digital Data Available
- No Digital Data Available
- Unmapped

N

The pin displayed on the map is an approximate point selected by the user and does not represent an authoritative property location.

This map complies with FEMA's standards for the use of digital flood maps if it is not void as described below. The basemap shown complies with FEMA's basemap accuracy standards

The flood hazard information is derived directly from the authoritative NFHL web services provided by FEMA. This map was exported on 11/5/2025 at 10:26 PM and does not reflect changes or amendments subsequent to this date and time. The NFHL and effective information may change or become superseded by new data over time.

This map image is void if the one or more of the following map elements do not appear: basemap imagery, flood zone labels, legend, scale bar, map creation date, community identifiers, FIRM panel number, and FIRM effective date. Map images for unmapped and unmodernized areas cannot be used for regulatory purposes.

UNIVERSITY OF MINNESOTA

# Septic System Management Plan for Above Grade Systems

The goal of a septic system is to protect human health and the environment by properly treating wastewater before returning it to the environment. Your septic system is designed to kill harmful organisms and remove pollutants before the water is recycled back into our lakes, streams and groundwater.

This **management plan** will identify the operation and maintenance activities necessary to ensure long-term performance of your septic system. Some of these activities must be performed by you, the homeowner. Other tasks must be performed by a licensed septic maintainer or service provider. However, it is **YOUR** responsibility to make sure all tasks get accomplished in a timely manner.

The University of Minnesota's *Septic System Owner's Guide* contains additional tips and recommendations designed to extend the effective life of your system and save you money over time.

***Proper septic system design, installation, operation and maintenance means safe and clean water!***

| | | | |
|---|---|---|---|
| Property Owner | New Life Community Church | Email | |
| Property Address | 11245 Point Douglas Dr S, Cottage Grove | Property ID | 3602721230002 |
| System Designer | Alex Pepin (Ten Thirty Environmental Solutions) | Contact Info | 612-248-4281 |
| System Installer | Midwest Sewer | Contact Info | |
| Service Provider/Maintainer | | Contact Info | |
| Permitting Authority | Washington County | Contact Info | 651-430-6655 |
| Permit # | | Date Inspected | |

Keep this Management Plan with your Septic System Owner's Guide. The Septic System Owner's Guide includes a folder to hold maintenance records including pumping, inspection and evaluation reports. Ask your septic professional to also:

- Attach permit information, designer drawings and as-built of your system, if they are available.
- Keep copies of all pumping records and other maintenance and repair invoices with this document.
- Review this document with your maintenance professional at each visit; discuss any changes in product use, activities, or water-use appliances.

For a copy of the *Septic System Owner's Guide*, visit www.bookstores.umn.edu and search for the word "septic" or call 800-322-8642.

## For more information see http://septic.umn.edu

Version: August 2015

UNIVERSITY OF MINNESOTA

*Septic System Management Plan for Above Grade Systems*

## Your Septic System

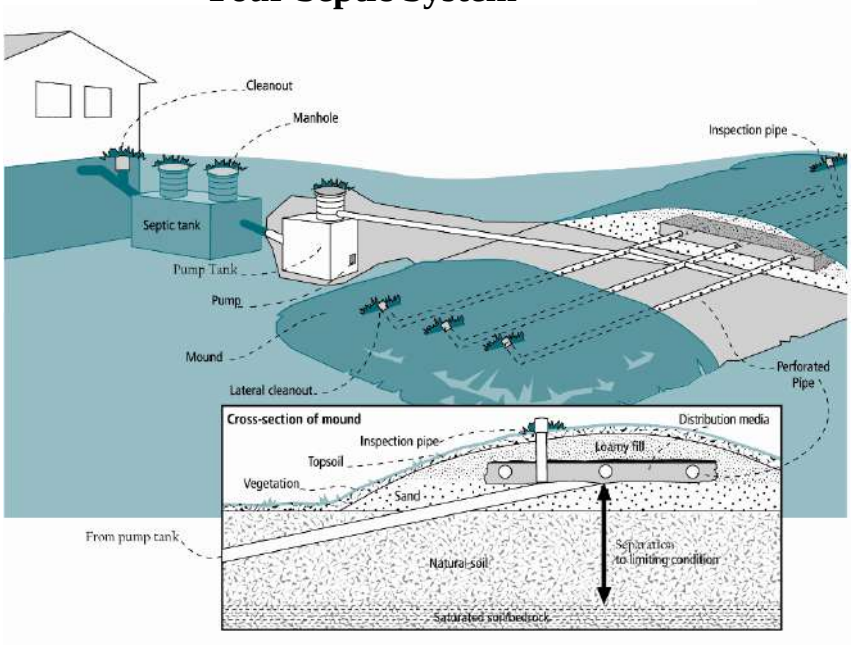


| Septic System Specifics | |
|---|---|
| System Type: ☑ I ☐ II ☐ III ☐ IV* ☐ V*<br>(*Based on MN Rules Chapter 7080.2200 – 2400)*<br>**Additional Management Plan required* | ☐ System is subject to operating permit*<br>☐ System uses UV disinfection unit*<br>Type of advanced treatment unit _____ |

| Dwelling Type | Well Construction |
|---|---|
| Number of bedrooms: _____<br>System capacity/ design flow (gpd): 591<br>Anticipated average daily flow (gpd): 414<br>Comments_____<br>Business? : ☑ Y ☐ N What type? church | Well depth (ft): unknown<br>❑ Cased well Casing depth: _____<br>❑ Other (specify): _____<br>Distance from septic (ft):_____<br>Is the well on the design drawing? ☑ Y ☐ N |

| Septic Tank | |
|---|---|
| ❑ First tank *Tank volume:* 4200 *gallons*<br>Does tank have two compartments? ☐ Y ☐ N<br>❑ Second tank *Tank volume:* 4200 *gallons*<br>❑ Tank is constructed of Precast Concrete<br>❑ Effluent screen: ☑ Y ☐ N Alarm ☑ Y ☐ N | ❑ Pump Tank 4200 *gallons*<br>❑ Effluent Pump *make/model*:_____<br>Pump capacity _____ GPM<br>TDH _____ Feet of head<br>❑ Alarm location _____ |

| Soil Treatment Area (STA) | |
|---|---|
| Mound/At-Grade area (width x length): 40 ft x 125 ft<br>Rock bed size (width x length): 10 ft x 100 ft<br>Location of additional STA: _____<br>Type of distribution media: Rock | ☑ Inspection ports ☑ Cleanouts<br>☐ Surface water diversions<br>☐ Additional STA not available |

# Homeowner Management Tasks

These op*eration and maintenance ac*tivities are your responsibility. *Chart on page 6 can help track your activities.*

**Your toilet is not a garbage can. Do not flush anything besides human waste and toilet paper. No wet wipes, cigarette butts, disposal diapers, used medicine, feminine products or other trash!**

The system and septic tanks needs to be checked every 24 months

Your service provider or pumper/maintainer should evaluate if your tank needs to be pumped more or less often.

**Seasonally or several times per year**

- *Leaks.* Check (listen, look) for leaks in toilets and dripping faucets. Repair leaks promptly.
- *Soil treatment area.* Regularly check for wet or spongy soil around your soil treatment area. If surfaced sewage or strong odors are not corrected by pumping the tank or fixing broken caps and leaks, call your service professional. *Untreated sewage may make humans and animals sick.* Keep bikes, snowmobiles and other traffic off and control borrowing animals.
- *Alarms.* Alarms signal when there is a problem; contact your service professional any time the alarm signals.
- *Lint filter.* If you have a lint filter, check for lint buildup and clean when necessary. If you do not have one, consider adding one after washing machine.
- *Effluent screen.* If you do not have one, consider having one installed the next time the tank is cleaned along with an alarm.

**Annually**

- *Water usage rate.* A water meter or another device can be used to monitor your average daily water use. Compare your water usage rate to the design flow of your system (listed on the next page). Contact your septic professional if your average daily flow over the course of a month exceeds 70% of the design flow for your system.
- *Caps.* Make sure that all caps and lids are intact and in place. Inspect for damaged caps at least every fall. Fix or replace damaged caps before winter to help prevent freezing issues.
- *Water conditioning devices.* See Page 5 for a list of devices. When possible, program the recharge frequency based on *water demand (gallons)* rather than *time (days)*. Recharging too frequently may negatively impact your septic system. Consider updating to demand operation if your system currently uses time,
- *Review your water usage rate.* Review the Water Use Appliance chart on Page 5. Discuss any major changes with your service provider or pumper/maintainer.

**During each visit by a service provider or pumper/maintainer**

- Make sure that your service professional services the tank through the manhole. (NOT though a 4" or 6" diameter inspection port.)
- Ask how full your tank was with sludge and scum to determine if your service interval is appropriate.
- Ask your pumper/maintainer to accomplish the tasks listed on the Professional Tasks on Page 4.

# Professional Management Tasks

*These are the operation and maintenance activities that a pumper/maintainer performs to help ensure long-term performance of your system.* At each visit a written report/record must be provided to homeowner.

**Plumbing/Source of Wastewater**

- Review the Water Use Appliance Chart on Page 5 with homeowner.
  Discuss any changes in water use and the impact those changes may have on the septic system.
- Review water usage rates (if available) with homeowner.

**Septic Tank/Pump Tanks**

- *Manhole lid*. A riser is recommended if the lid is not accessible from the ground surface. Insulate the riser cover for frost protection.
- *Liquid level*. Check to make sure the tank is not leaking. The liquid level should be level with the bottom of the outlet pipe. (If the water level is below the bottom of the outlet pipe, the tank may not be watertight. If the water level is higher than the bottom of the outlet pipe of the tank, the effluent screen may need cleaning, or there may be ponding in the soil treatment area.)
- *Inspection pipes*. Replace damaged or missing pipes and caps.
- *Baffles*. Check to make sure they are in place and attached, and that inlet/outlet baffles are clear of buildup or obstructions.
- *Effluent screen*. Check to make sure it is in place; clean per manufacturer recommendation. Recommend retrofitted installation if one is not present.
- *Alarm*. Verify that the alarm works.
- *Scum and sludge*. Measure scum and sludge in each compartment of each septic and pump tank, pump if needed.

**Pump**

- *Pump and controls*. Check to make sure the pump and controls are operating correctly.
- *Pump vault*. Check to make sure it is in place; clean per manufacturer recommendations.
- *Alarm*. Verify that the alarm works.
- *Drainback*. Check to make sure it is draining properly.
- *Event counter or elapsed time meter*. Check to see if there is an event counter or elapsed time meter for the pump. If there is one or both, calculate the water usage rate and compare to the anticipated use listed on Design and Page 2. Dose Volume: _____ gallons: Pump run time: _____ Minutes

**Soil Treatment Area**

- *Inspection pipes*. Check to make sure they are properly capped. Replace caps and pipes that are damaged.
- *Surfacing of effluent*. Check for surfacing effluent or other signs of problems.
- *Lateral flushing*. Check lateral distribution; if cleanouts exist, flush and clean at recommended frequency.
- *Vegetation* - Check to see that a good growth of vegetation is covering the system.

**All other components – evaluate as listed here:**

# Water-Use Appliances and Equipment in the Home

| Appliance | Impacts on System | Management Tips |
|---|---|---|
| Garbage disposal | • Uses additional water.<br>• Adds solids to the tank.<br>• Finely-ground solids may not settle. Unsettled solids can exit the tank and enter the soil treatment area. | • Use of a garbage disposal is not recommended.<br>• Minimize garbage disposal use. Compost instead.<br>• To prevent solids from exiting the tank, have your tank pumped more frequently.<br>• Add an effluent screen to your tank. |
| Washing machine | • Washing several loads on one day uses a lot of water and may overload your system.<br>• Overloading your system may prevent solids from settling out in the tank. Unsettled solids can exit the tank and enter the soil treatment area. | • Choose a front-loader or water-saving top-loader, these units use less water than older models.<br>• Limit the addition of extra solids to your tank by using liquid or easily biodegradable detergents. Limit use of bleach-based detergents and fabric softeners.<br>• Install a lint filter after the washer and an effluent screen to your tank<br>• Wash only full loads and think even – spread your laundry loads throughout the week. |
| Dishwasher | • Powdered and/or high-phosphorus detergents can negatively impact the performance of your tank and soil treatment area.<br>• New models promote “no scraping”. They have a garbage disposal inside. | • Use gel detergents. Powdered detergents may add solids to the tank.<br>• Use detergents that are low or no-phosphorus.<br>• Wash only full loads.<br>• Scrape your dishes anyways to keep undigested solids out of your septic system. |
| Grinder pump (in home) | • Finely-ground solids may not settle. Unsettled solids can exit the tank and enter the soil treatment area. | • Expand septic tank capacity by a factor of 1.5.<br>• Include pump monitoring in your maintenance schedule to ensure that it is working properly.<br>• Add an effluent screen. |
| Large bathtub (whirlpool) | • Large volume of water may overload your system.<br>• Heavy use of bath oils and soaps can impact biological activity in your tank and soil treatment area. | • Avoid using other water-use appliances at the same time. For example, don’t wash clothes and take a bath at the same time.<br>• Use oils, soaps, and cleaners in the bath or shower sparingly. |
| **Clean Water Uses** | **Impacts on System** | **Management Tips** |
| High-efficiency furnace | • Drip may result in frozen pipes during cold weather. | • Re-route water directly out of the house. Do not route furnace discharge to your septic system. |
| Water softener<br>Iron filter<br>Reverse osmosis | • Salt in recharge water may affect system performance.<br>• Recharge water may hydraulically overload the system. | • These sources produce water that is not sewage and should not go into your septic system.<br>• Reroute water from these sources to another outlet, such as a dry well, draintile or old drainfield.<br>• When replacing, consider using a demand-based recharge vs. a time-based recharge.<br>• Check valves to ensure proper operation; have unit serviced per manufacturer directions |
| Surface drainage<br>Footing drains | • Water from these sources will overload the system and is prohibited from entering septic system. | |

## Homeowner Maintenance Log

*Track maintenance activities here for easy reference. See list of management tasks on pages 3 and 4.*

| Activity | Date accomplished | | | | | | | | | |
|---|---|---|---|---|---|---|---|---|---|---|
| ***Check frequently:*** | | | | | | | | | | |
| Leaks: check for plumbing leaks* | | | | | | | | | | |
| Soil treatment area check for surfacing** | | | | | | | | | | |
| Lint filter: check, clean if needed* | | | | | | | | | | |
| Effluent screen (if owner-maintained)*** | | | | | | | | | | |
| Alarm** | | | | | | | | | | |
| ***Check annually:*** | | | | | | | | | | |
| Water usage rate (maximum gpd _____) | | | | | | | | | | |
| Caps: inspect, replace if needed | | | | | | | | | | |
| Water use appliances – review use | | | | | | | | | | |
| Other: | | | | | | | | | | |

*Monthly

**Quarterly

***Bi-Annually

Notes: Clean effluent filter at every maintenance visit. If add iron filter, divert reject water out of septic system. Recommend using low flow fixtures (<1.5 gpm). Also recommend installing a Moen Flo water meter (or similar product) to monitor water usage and detect leaks. Examples of these are shown on the following pages.

*"As the owner of this SSTS, I understand it is my responsibility to properly operate and maintain the sewage treatment system on this property, utilizing the Management Plan. If requirements in this Management Plan are not met, I will promptly notify the permitting authority and take necessary corrective actions. If I have a new system, I agree to adequately protect the reserve area for future use as a soil treatment system."*

Property Owner Signature: Date

Management Plan Prepared By: Alex Pepin Certification # 9844

Permitting Authority: Washington County

©2015 Regents of the University of Minnesota. All rights reserved. The University of Minnesota is an equal opportunity educator and employer. This material is available in alternative formats upon request. Contact the Water Resources Center, 612-624-9282. The Onsite Sewage Treatment Program is delivered by the University of Minnesota Extension Service and the University of Minnesota Water Resources Center.

flo BY MOEN

AWARD POPULAR SCIENCE BEST OF WHAT'S NEW 2018 WINNER

BEST OF KBIS WINNER SMART HOME TECHNOLOGY

## The smart home water security system

- Flo by Moen is a mainline water monitoring device for the home.
- The device monitors water, identifies leaks and alerts homeowners of these issues to protect the home.
- Real-time alerts through the smartphone app help inform homeowners on water usage on a daily, weekly and monthly basis.
- Features notifications for remote shutoff option for homeowner via mobile app and automatic shutoff if a catastrophic leak is detected in the home.

MOEN®

flō BY MOEN

MODEL NO. 900-001

**Whole-Home Water Security**
Flo by Moen monitors the entire water system for big leaks, microleaks and even invisible leaks behind walls.

**Proactive Protection**
Daily health tests help keep the home leak-free and alert the user when there's an issue.

**Water Shutoff**
Remote water shutoff from the user's phone and automatic water shutoff for protection even when they're offline.

Visit **moen.ca/flo** for additional information.
Professional installation recommended.
Insurance discounts may be available based on carrier and region. Please check with your local insurance representative for eligibility.

**Microleak™ Technology**
Advanced sensors detect leaks as small as one drop of water per minute.

**Support**
On-call experts help users identify and troubleshoot detected leaks.

**Savings**
Save water and money while protecting the home and possessions from water damage.

App compatibility:

Works with amazon alexa | works with the Google Assistant | Works with IFTTT

FloProtect™

- Water damage deductible guarantee $2,500*USD*
- Proactive monitoring and water concierge
- Enhanced water usage data
- Extended product warranty (3 years)
- Insurance Verification Letter
- $5*USD* per month fee with 30-day free trial

**In the Box**

- Flo by Moen device
- 3/4" – 14 NPT, Threaded brass tailpieces (×2)
- 10' power supply
- Spare O-rings (×2)
- Installation spacer
- 5/16" hex key
- Installation guide

## Where is Flo by Moen installed?

One device is installed on the main water supply line and paired with the home's Wi-Fi. From here, Flo by Moen can capture all vulnerabilities in the potable water system.

MOEN®

© 2019 Moen Incorporated

**Not as accurate as Moen unit – however good at identifying leaks and less expensive and easier install**

## Droplet (https://shop.hydrificwater.com/pages/buy-droplet)

## Smart Home Water Sensor

- Droplet is an all-in-one smart water sensor that uses powerful ultrasonic sensors and AI to track your household water use.
- Protect your home from water damage with instant leak alerts and get detailed insights into how each appliance in your home is using water.
- Instant Leak Alerts
- Real-Time Water Tracking
- $199.00

**Description**

Meet your new essential water tool.

Droplet is the most advanced water precision sensor that detects leaks instantly and gives you full control of your water use.

**Best-in-class precision readings**

Dual ultrasonic sensors scan water flow up to 50 times per second, detecting flows as low as 0.1 liters per minute for the most accurate leak detection and water tracking on the market.

**Total control of your water**

Get insights into your water bills with detailed breakdowns into your household water usage monthly, daily or even hourly.

**See where your water is going**

Pinpoint the appliances using the most water and understand your water use. Advanced AI monitors your water patterns so you can track and view your habits easily.

**One Device for Your Entire Home**

Other water monitors require you to place multiple sensors around the home where you think leaks are likely to occur. One Droplet in a single location is all you need to monitor your entire home's water system for leaks.

**Self-install in minutes**

No tools or plumber necessary. Simply clamp and connect in minutes to start tracking water and saving money.

# H2OPTION® SIPHONIC DUAL FLUSH ELONGATED TOILET
**VITREOUS CHINA**

## H2OPTION® SIPHONIC DUAL FLUSH ELONGATED TOILET

❑ **2887.218**
- Vitreous china
- Ultra high efficiency
  - Full Flush (4.8 Lpf/1.28 gpf)
  - Partial Flush (3.4 Lpf/0.92 gpf)
- Elongated siphon action bowl with direct-fed jet
- Meets EPA WaterSense® criteria
- MaP PREMIUM listed
- Includes EverClean® antimicrobial surface
- PowerWash® rim scrubs bowl with each flush
- 305mm (12") rough-in
- Fully glazed 2" Trapway
- Generous 9" x 8" water surface area
- Chrome plated top mounted push button actuator
- Sanitary bar on bowl
- 2 color matched bolt caps
- Limited lifetime warranty on chinaware and limited five year warranty on all mechanical parts

❑ **2887.518** Same as above, except with Tank with AquaGuard Liner

**Separate Component Parts:**
❑ **3706.216** Bowl
❑ **4133A.218** Tank
❑ **4133A.518** Tank with AquaGuard Liner

**Nominal Dimensions:**
756 x 380 x 762mm
(29-3/4" x 15" x 30")

Fixture only, seat and supply by others

**Compliance Certifications -**
**Meets or Exceeds the Following Specifications:**
- ASME A112.19.2-2008/CSA B45.1-08 for Vitreous China Fixtures
- CALGreen and Califonia Energy Commission (CEC) Compliant
- US EPA WaterSense® criteria for UHETs

**To Be Specified:**
❑ Color: ❑ White ❑ Bone ❑ Linen
❑ Seat: American Standard #5257A.65C Easy Lift and Clean Elongated Seat with Cover and Slow Close hinges
❑ Alternate Seat:
❑ Supply with stop:

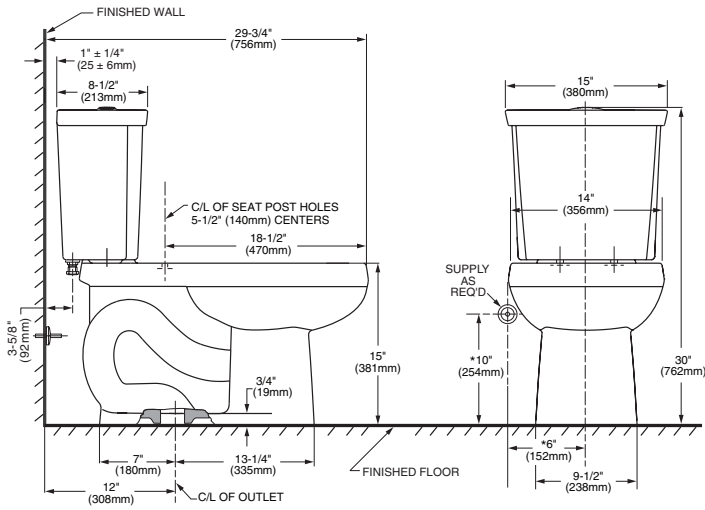


**NOTES:**
THIS COMBINATION IS DESIGNED TO ROUGH-IN AT A MINIMUM DIMENSION OF 305MM (12") FROM FINISHED WALL TO C/L OF OUTLET.
* DIMENSION SHOWN FOR LOCATION OF SUPPLY IS SUGGESTED. SUPPLY NOT INCLUDED WITH FIXTURE AND MUST BE ORDERED SEPARATELY.

**IMPORTANT:** Dimensions of fixtures are nominal and may vary within the range of tolerance established by ANSI Standard A112.19.2
These measurements are subject to change or cancellation. No responsibility is assumed for use of superseded or voided pages.

WaterSense Meets EPA Criteria
Certified by IAPMO R&T

WATER EFFICIENT PRODUCT



© 2015 AS America Inc.

NIAGARA CONSERVATION

# PRESSURE COMPENSATING NEEDLE SPRAY FAUCET AERATOR

Our Niagara Conservation branded Dual Spray Swivel Aerator with Pause Valve directs the water flow where it's needed the most providing greater efficiencies. It offers two stream options: a full force multiple stream and a splash-free bubble stream that can be changed by twisting the body. This aerator contains a 360° swivel which helps to reduce water use by directing the water flow where it's needed. This aerator also features a pause action valve that reduces flow to a trickle while keeping temperature constant.

## THE FEATURES

- Dual threaded
- Fits most male and female threaded faucets, Male: 15/16-27, Female: 55/64-27
- Pressure compensating technology guarantees a consistent flow rate across a wide range of pressure
- Needle Spray
- 10 year warranty***

## CERTIFICATION & PERFORMANCE REQUIREMENTS

- ASME A112.18.1 / CSA B125.1; ANSI/NSF 61

**N3205NBN-PC-T**

| MODEL # | SPRAY | FINISH | FLOW RATE | WATERSENSE | CASE QTY. |
|---|---|---|---|---|---|
| N3205N-PC | Needle | Chrome | 0.5 GPM | No | 500 |
| N3205NBN-PC-T | Needle | Brushed Nickel | 0.5 GPM | No | 500 |
| N3210N-PC | Needle | Chrome | 1.0 GPM | Yes | 500 |
| N3215N-PC | Needle | Chrome | 1.5 GPM | Yes | 500 |

## THE POTENTIAL ANNUAL SAVINGS*

| | FLOW RATE | WATER | ELECTRIC HEATING | GAS HEATING |
|---|---|---|---|---|
| DOLLAR SAVINGS | 0.5 GPM | $124 | $107 | $52 |
| UTILITY SAVINGS | 0.5 GPM | 14,892 gallons | 842 kWh | 46 therms |
| DOLLAR SAVINGS | 1.0 GPM | $104 | $67 | $37 |
| UTILITY SAVINGS | 1.0 GPM | 10,512 gallons | 594 kWh | 33 therms |
| DOLLAR SAVINGS | 1.5 GPM | $51 | $39 | $21 |
| UTILITY SAVINGS | 1.5 GPM | 6,132 gallons | 347 kWh | 19 therms |

## THE DIMENSIONS**

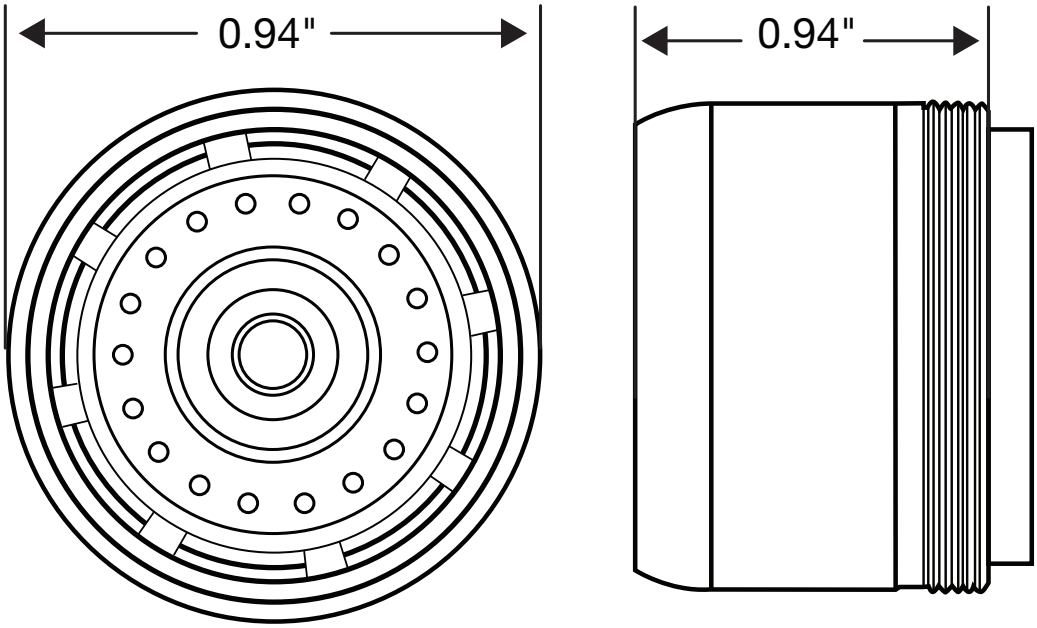


*Factors in calculating savings potential:

- 3-person households each person using a faucet 8 minutes per day, 365 days per year (AWWARF Residential Study)
- Comparing water use with these aerator vs. a standard 2.2 GPM unit
- US city average water and sewer cost of $8.3 per 1,000 gallons (study done by NUS Consulting Group 2011)
- Average cost of electricity 0.113¢ per kWh (Energy Star Nov. 2013 Lightbulb Calculator — http://www.energystar.gov/?c=cfls.pr_cfls_savings)
- Average cost of gas $1.137 per therm (Bureau of Labor Statistics April 2014)
- Calculations done by http://www.fishnick.com/savewater/tools/watercalculator

**Dimensions are subject to change

***WARRANTY DETAILS

AM Conservation Group, Inc. guarantees to the original purchaser or recipient of an aerator that it is free from defects in material and workmanship for a period of 10 years. AM Conservation Group, Inc. will at our choice replace any part of the aerator which is in our opinion defective provided that the product has not been abused, misused, altered, or damaged after its purchase. This includes damage due to the use of tools or harsh chemicals. In the event a product has been discontinued, AM Conservation Group, Inc. will replace it with what we determine to be the closest product. AM Conservation Group, Inc. is not responsible for labor charges, installation, or other consequential cost. AM Conservation Group, Inc.'s responsibility shall not exceed the original cost of the product.



1701 Charleston Regional Parkway, Suite A | Charleston, SC 29492
(843) 971-1414 | www.amconservationgroup.com

# Specifications

McKenna Single-Handle Pull-Down Sprayer Kitchen Faucet

| MODEL | SKU# | FINISH |
|---|---|---|
| HD67726W-1201 | 1005604253 | Chrome |
| HD67726W-1208D2 | 1005604255 | Stainless Steel |
| HD67726W-1210H | 1005604254 | Matte Black |
| HD67726W-124405 | 314006951 | Matte Gold |

## FEATURES

- Requires 1 Hole Sink with 8" On-Center
- Max Flow Rate: 1.8 gpm (6.8 L/min) at 60 psi
- Max Countertop Thickness: 2 3/32"
- Spout Reach: 8 7/64"
- Spout Height: 7 49/64"
- Ceramic Valve for Lifetime Drip-Free Operation
- With Zinc Lever Handle
- Fast Mount Installation

## CODE COMPLIANCE

- IAPMO Certified: ASME A112.18.1/CSA B125.1
- NSF 61 Section 9
- NSF 372
- Calgreen Certified
- Meets AB 1953 Lead Standard
- ADA Compliant

## WARRANTY

- Limited Lifetime Warranty

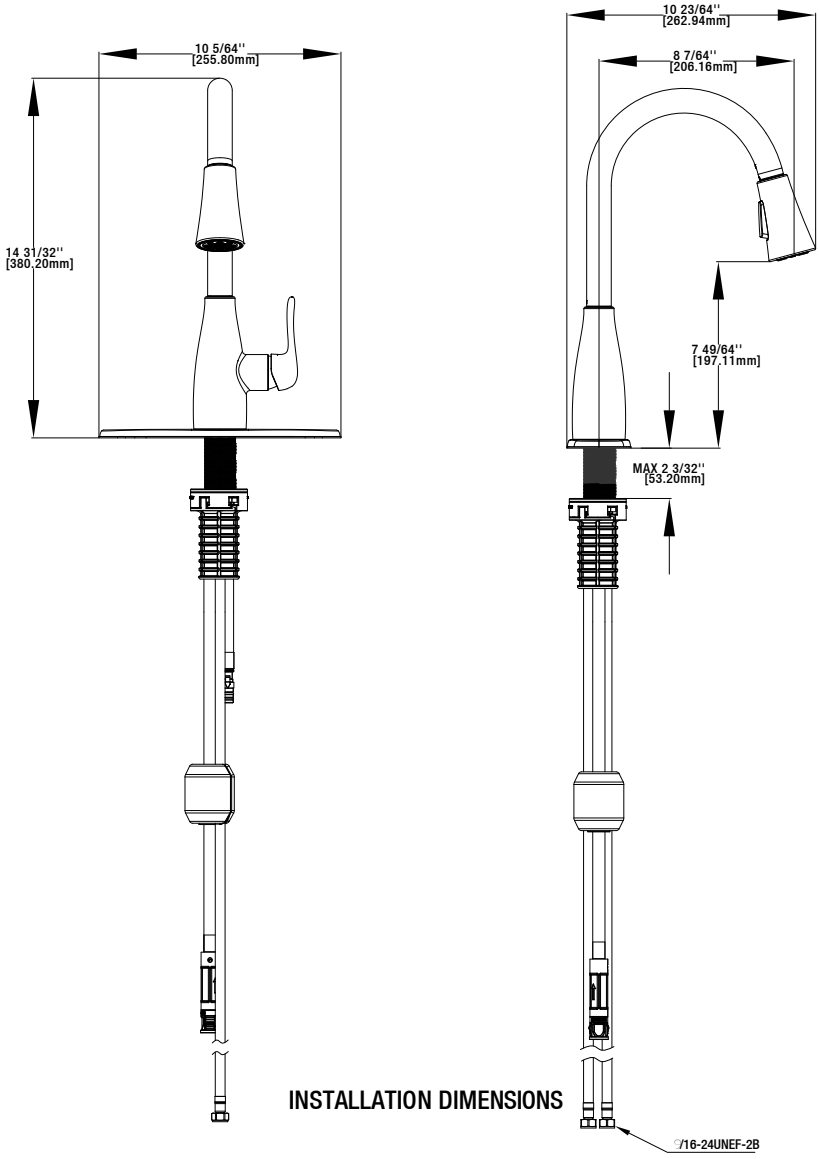


INSTALLATION DIMENSIONS

Glacier Bay reserves the right to make changes in specifications and materials and to change and discontinue models, both without notice or obligation. Dimensions are for reference only.

# Landscaping Septic Systems

COLLEGE OF FOOD, AGRICULTURAL AND NATURAL RESOURCE SCIENCES

***Mary H. Meyer,*** *Extension Horticulturist*
***Brad Pedersen,*** *Extension Horticulturist (retired)*
***Marguerite Jaster,*** *Landscape Design Assistant*
*Department of Horticultural Science*
***James Anderson,*** *Extension Soil Scientist, Department of Soil, Water, and Climate (retired)*
***Kenneth M. Olson,*** *Extension Educator (retired)*
***David M. Gustafson,*** *Extension Specialist, Onsite Sewage Treatment, Water Resources Center*

Landscaping near and around septic systems is of concern to many homeowners. Whether drainfields or mounds, Minnesota septic systems must have a minimum of three feet of unsaturated soil between the drainfield or point of infiltration and limiting soil condition such as hardpan, bedrock or saturated soil in order to properly treat sewage. A mound system is required if three feet of separation cannot be achieved with an inground trench system. Mound systems are designed to maximize the absorption capacity of existing soil (see Figure 1). Mound location, size, shape, construction procedures and maintenance of the mound all interact in determining how well the system will function. Placement of plants on and near the mound must be done with care to ensure a properly functioning septic system. Plants enhance the system by removing moisture and nutrients from the soil and providing cover to prevent erosion.

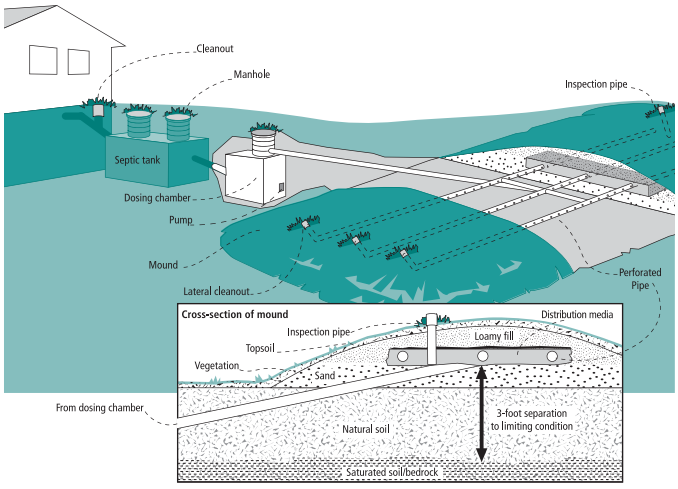


**Figure 1. Cross section of a mound system.**

## Mound Placement

A rectangular mound rising 18 inches to 5 feet above the surface of a relatively flat home landscape may be quite noticeable and possibly very unsightly. Careful design planning **before the mound system is installed** can help to create a sustainable landscape with lower maintenance costs, greater environmental benefits, and much higher aesthetic value. Mounds can be placed to suit individual landscaping and lot size needs (see Figures 2 and 3). Properly landscaped areas around the mound can serve as privacy barriers, windbreaks for homes and a screen from unsightly views.

As a homeowner considering the placement of a septic mound, know your options. *The earlier in the process that you become involved in expressing your preferences, the more options you will have.* For instance, before the house is designed or built, potential septic locations, along with soil borings and percolation tests, can give some control over the placement and final outcome. State and local laws set distances from wells and lakes, based on well casing depth and lake classification. Property lines (PL) or rights-of-way set backs are usually 10 feet (see Figure 4). Additionally, on even a slight slope, it is paramount that the mound rockbed be on the contour for proper operation of the system. Soil must not be moved to create a different slope, as this reduces the ability of the soil to accept the effluent. Once the drainfield or mound is determined, protect it from compaction and disturbance to ensure proper sewage treatment.

When planning a landscape, there should be an **invisible or concept line** the eye follows around the yard (see Figures 2, 3 and 4). Where space allows, this line is a graceful curve which represents the division between two different types of plant material (turf or ground cover versus shrubs) or between plants and hard goods (turf, patio or deck). The concept line becomes a real bedline where the lawn ends and the shrubs begin. If your property is large enough to plan

This publication is meant to be used in conjunction with the *Septic System Owners Guide*, Item # 06583 which further explains the site requirements for placement and location of a mound system. See back page for ordering information.

UNIVERSITY OF MINNESOTA
EXTENSION

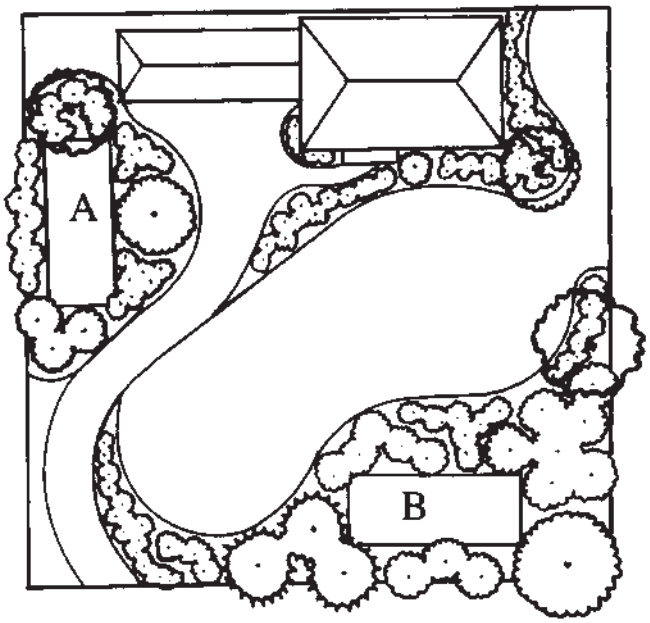


**Figure 2. A and B represent possible placement of mound septic systems.**

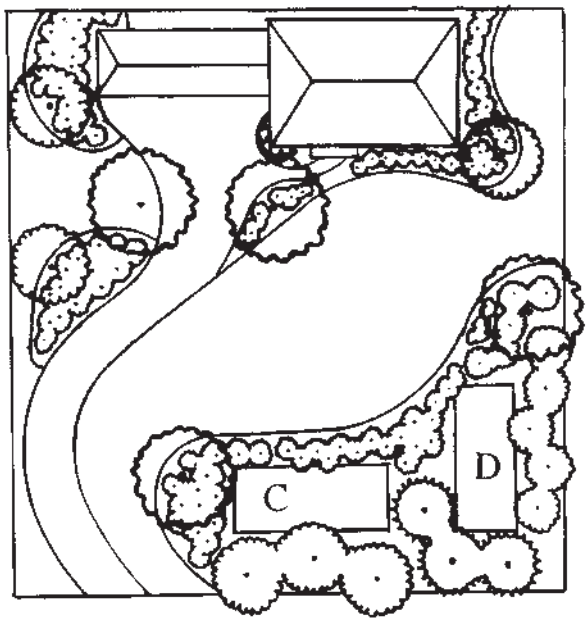


**Figure 3. C and D show additional mound system locations.**

an **unbroken turf area** as the **first priority**, then place the septic system beyond the bedline disguising it as part of a shrub or perennial area or screening it with trees or large shrubs. If your property is smaller, blending the mound into the overall landscape is still the key. Try moving the focal point from the mound to other plants or features. **Extending the actual berm** with additional topsoil at the same height and curving the perimeter, then sloping down and away can conceal the existence of the system (see Figure 4). If the drainfield must be located near a drive, patio, or walkway, retaining walls may be used to save space, but only on the uphill side of the berm. Connect the extended berm to another large feature in the yard, such as a pool enclosure or other fenced area, using retaining walls for transition. ALWAYS design with the entire yard or viewing area in mind—connect it to the whole picture.

## Guidelines for Planting on and Near Septic Mounds

It is very important that the integrity of the mound be kept intact and that soil does not wash away. A permanent vegetation cover is required to minimize topsoil loss. Open sites are more susceptible to frost, heaving and erosion. Plants trap snow which acts as a mulch and prevents erosion.

- Topsoil on the mound should be a minimum of 6 inches and a maximum of 16 inches.
- Do not till when planting.
- Establish a cover as soon as possible to limit erosion.
- Always wear gloves when working over septic systems to minimize your contact with soil.
- Use plants that do not like water or wet soils near the septic system. This will prevent their root systems from interfering with the septic system. The larger the plant, the more extensive (not necessarily deeper) the root system.
- **Do not place** trees and shrubs **ON** the mound; they may be planted at the foot or on side slopes. Frame the mound with trees and shrubs at a distance, but use only herbaceous (non-woody) plants on the mound itself. Trees should be planted a minimum of 20 feet from the edge of the mound. Trees known for seeking water reservoirs, such as poplar, maple, willow and elm, should be planted at least 50 feet from the mound. Shrubs should not be planted on top of the mound.
- Avoid irrigation and fertilization on a mound; in fact, never plan to irrigate this area. Use plants that can withstand dry conditions. Plants listed on the back page tolerate and thrive on natural rainfall in Minnesota.
- Minimize traffic on the mound, both human and animal, to avoid soil compaction. Do not exercise pets or stake pets on septic mounds. Never drive a car or other vehicle across the mound or mow when the soil is wet. Compacted soil can lead to soil erosion and impedes the flow of air around the system. In winter, activity on a mound can cause frost to penetrate resulting in freezing problems.
- Do not plant edible plants, such as vegetables and herbs on a mound or drainfield.
- Annually inspect the mound for animal damage such as burrowing and tunneling. Control animals at the first sign of tunneling or burrowing before damage is extensive.
- Root barriers (geotextiles impregnated with a long-lasting herbicide that kills plant roots) have been used around mounds. Installation is expensive and can be avoided with proper plant selection.

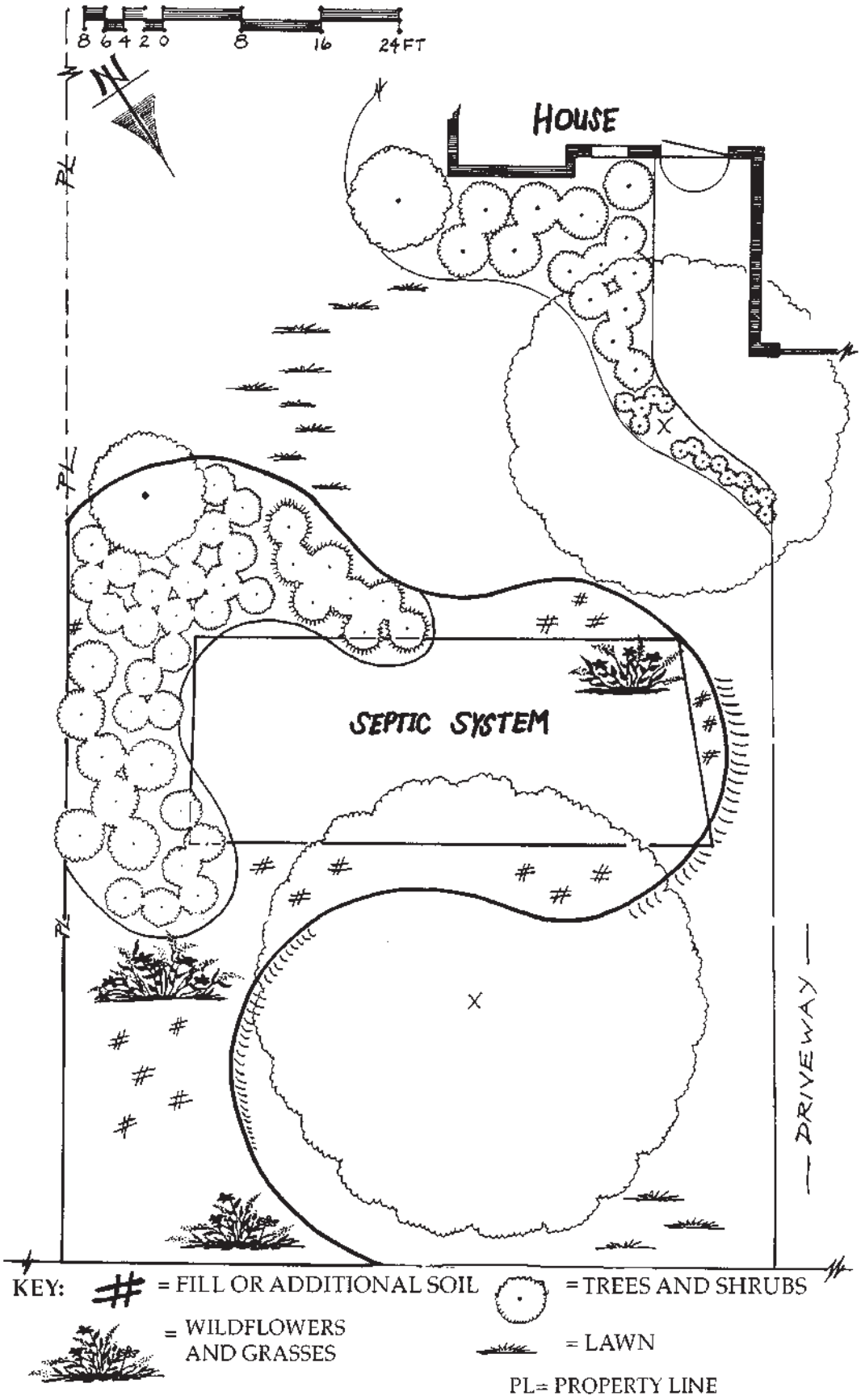


**Figure 4. Model landscape plan for mound septic system.**

## Suggested Plants for Use on Septic Mounds

Herbaceous plants, such as **wildflowers and grasses**, are good choices for mound plantings. Grasses are especially desirable due to their fibrous root systems which hold soil in place. Grasses also provide year-round cover.

The following native prairie plants grow well on dry soils and would be good choices for a mound septic system:

**Wildflowers**

prairie onion (Allium stellatum)
pussytoes (Antennaria neglecta)
butterflyweed (Asclepias tuberosa)
heath aster (Aster ericodes)
bigleaf aster (Aster macrophyllus)*
Pennsylvania sedge (Carex pensylvanica)*
prairie clover (Dalea spp.)
pale purple coneflower (Echinacea angustifolia)
rattlesnake master (Eryngium yuccifolium)
wild geranium (Geranium maculatum)*
prairie smoke (Geum triflorum)
oxeye (Helianthus helianthoides)
rough blazing star (Liatris aspera)
wild bergamot (Monarda fistulosa)
penstemon (Penstemon spp.)
pasqueflower (Pulsatilla patens)
violets (Viola spp.)*

**Grasses**

sideoats grama (Bouteloua curtipendula)
blue grama (Bouteloua gracilis)
little bluestem (Schizachyrium scoparium)
prairie dropseed (Sporobolus heterolepis)
June grass (Koeleria macrantha)

* *shade tolerant*

These plants are propagated by seed or plants. A combination of both will make a faster cover. Use a mulch of clean straw or a cover crop of annual ryegrass or oats to prevent erosion while the plants become established.

**Low maintenance lawn grasses,** such as fine fescues, can make a dense cover and only need to be mowed once or twice a year. Mow in October and late June to reduce weeds. Fescues are traditional lawn grasses that tolerate dry soils and shady sites. A mixture of fine-textured fescues, such as creeping red, hard and sheep's fescues *(Festuca rubrum, Festuca longifolia, Festuca ovina)*, in equal proportions can be seeded at the rate of 3.5 pounds per 1000 square feet. Traditional lawn grasses, such as common Kentucky bluegrass and perennial ryegrass, can be planted on a mound and regularly mowed. Mowing will increase evaporation from the mound and aid in rodent control.

**Perennial flowers,** such as daylilies and peonies, can be grown; however, extra care must be taken to mulch or plant close together so soil will not be exposed and erode. Low maintenance plants that do not need tending and care (remember minimal traffic on the mound) are best. Enjoy from afar, and do not walk on the mound.

**Figure 5. Pasqueflower is a native wildflower that tolerates dry soil conditions.**

Proper selection and placement of plants best suited to the site means that those plants will be healthier, more attractive, and have fewer pest problems.

## References and Further Information

*Septic System Owners Guide,* Item # 06583
*Plants in Prairie Communities*, Item # 03238

The publications can be ordered from University of Minnesota Extension. Go to http://shop.extension.umn.edu or call 1-800-876-8636.

For landscape design publications, refer to SULIS URL in Extension site: www.sustland.umn.edu

For more information about septic systems, refer to UMN Onsite Sewage Treatment Program website: http://septic.umn.edu

---

Item # 06986
2008
**www.extension.umn.edu**

Additional copies of this item can be ordered from the University of Minnesota Extension Store, 405 Coffey Hall, 1420 Eckles Avenue, St. Paul, MN 55108-6069, e-mail: shopext@umn.edu or credit card orders at 800-876-8636 or 612-624-4900 (local calls).

Printed on recycled paper with minimum 10% postconsumer waste.

Produced by Communication and Educational Technology Services, University of Minnesota Extension.

In accordance with the Americans with Disabilities Act, this material is available in alternative formats upon request. Please contact your Minnesota Extension office or, outside of Minnesota, contact the Extension Store at 1-800-876-8636.

Copyright © 1998, 2008, Regents of the University of Minnesota. All rights reserved. Send copyright permission inquiries to: Copyright Coordinator, University of Minnesota Extension, 405 Coffey Hall, 1420 Eckles Ave., St. Paul, MN 55108-6068. E-Mail to extcopy@umn.edu

University of Minnesota Extension is an equal opportunity educator and employer.

**DEPARTMENT OF PUBLIC HEALTH AND ENVIRONMENT**

**14949 62nd Street North P.O. Box 6**

**Stillwater, MN 55082-0006**

**Office: 651-430-6655 TTY: 651-430-6246 Fax: 651-430-6730**

**Community** City Of Cottage Grove

**Permit Number** 2025-3556

**Owner** New Life Comm Chur

**Owner Address** Po Box 546 , Hastings Mn 55033

**Applicant** Midwest Services

## PERMISSION IS HEREBY GRANTED

**To execute the work specified in this permit on the following identified property upon express condition that said persons and their agents, and employees shall conform in all respects to the provisions of Ordinance #206, Washington county Development Code, Chapter Four, Subsurface Sewage Treatment System Regulations. This permit may be revoked at any time upon violation of any of the provisions of said ordinance.**

**Project Address** 11245 Point Douglas Dr S, City Of Cottage Grove

**Geo Code** 3602721230002

**Designer** Ten Thirty Environmental Solutions, SBC

**Type of System:** Replacement System Mound

**Design Criteria**

Depth to Restriction: 30 Inches

Land Slope 4.00 %

Flow Rate: 2460.00 GPD

**Mound Sizing**

Rock Bed Width: 10.00 Feet

Rock bed Length: 100.00 Feet

Absorption Width: 20.00 Feet

Depth of Clean Sand: 1.00 Feet

Downslope Dike Width: 16.00 Feet

Upslope Dike: 10.00 Feet

Length of Dike: 126.00 Feet

**Pressure Distribution**

Number of Laterals: 3

Perforation Spacing: 3.0 Feet

Perforation Diameter: 3/16 Inch

Lateral Diameter: 1-1/2 Inches

Total Dynamic Head: 49 Feet

Pump 1: 59 GPM

**Tank Sizes**

Tank 1: 4200 Gallons

Tank 2: 4200 Gallons

Pump Tank 1: 4200 Gallons

## Authorized Work/Special Conditions

**The granting of this permit does not alleviate the applicant from obtaining any other Federal, State, or local permits required by law for this project.**

*CENTER MANIFOLD *Design requires secondary protection within manholes - CONSIDER a hatch w/ padlock to access dual alternating pump *calibrate pump and verify GPM after install *Time dose panel with elapsed time meter, event counter & alarm *Use of non-registered tanks allowed, a licensed Professional Engineer to sign off the tank meeting Minn. R. 7080.2010 *New building sewer for other establishment to be permitted/inspected by others (DOLI) *New well to meet SSTS setbacks (properly abandon existing well) *Approval for SSTS - project to meet local city land use and watershed district requirements prior to construction

*** Abandon old tank(s) properly., Call at least 24 hours before the time you need an inspection., Domestic strength waste only. Industrial waste and hazardous wastes cannot enter the septic system., Effluent Filter & Alarm required on outlet of last tank in series - must have handle to access from final grade., Establish a vegetative cover over the soil treatment area within 30 days of the installation. Protect the soil treatment area from erosion until the vegetative cover is established., Install a meter to monitor wastewater flow., Installer must verify head and elevation so the proper pump size is used., Install individual sewage treatment system as per approved design in area tested and shown on the site plan., Install only when soil is below the plastic limit (dry soil conditions)., Insulate tank lids to a value of R-10 if tanks are 2-feet or less from the surface., Pressurized laterals can be no further apart than 36 inches and require accessible cleanouts at the end of each lateral., Rope off and protect tested area from all vehicle traffic., System must be operated in accordance with the attached Management Plan., This system must be installed by a certified/licensed sewage treatment system installer holding a current license with the Minnesota Pollution Control Agency. , Use of tanks registered with the Minnesota Pollution Control Agency required.
**All permitted SSTS work must include an inspection and scheduled 24 hours in advance by calling 651-430-6655. Required Inspections: Final, Rough-Up, Soil Treatment Area, Tank Inspection, Abandon existing tank(s) properly**

---

Permit Issuance Date: 11/26/2025
Permit Expiration Date: 11/26/2026

491eb0fa9b1cbb66a6c60a2498359084
a323ee3c9d5a7ca16c20b2c8c4bc49ed
Sarah Borrell 11/26/2025 - Issued

KJOLHAUG ENVIRONMENTAL SERVICES COMPANY

*Providing Sound, Balanced, Comprehensive Natural Resource Solutions*

# Memorandum

**Date:** December 29th, 2025

**To:** Jay Riggs, South Washington Watershed District (LGU)

**CC:** Benjamin Myre, New Life Evangelical Free Church
Nick Adam, Rehder & Associates

**From:** Archie MacKinnon, Kjolhaug Environmental Services (KES)

**Re:** Site Assessment for Wetlands and No Wetland Determination
**11245 Point Douglas Drive South, Cottage Grove (KES 2025-223)**

---

Kjolhaug Environmental Services (KES) conducted a desktop review of the 10.12-acre, 11245 Point Douglas Drive South site in Cottage Grove, MN to evaluate the presence and extent of wetlands. KES utilized the 1987 U.S. Army Corps of Engineers Wetland Delineation Manual (87 Manual) Routine Level 1 delineation method based on offsite information. Based on the review of available information, no wetland was identified on the property.

The site is located in Section 36, Township 27 North, Range 21 West, City of Cottage Grove, Washington County, Minnesota. The site is situated southwest of US 10 and east of the River Oaks Golf Course (**Figure 1**). The site boundary corresponds to Washington County PID 3602721230002 (11245 Point Douglas Dr S; 10.12 acres).

The site consists of the New Life Evangelical Free Church and associated parking lot, lawn and woods. Surrounding land use consists of agricultural fields to the south and north, a golf course to the west and a church to the north. Existing conditions are depicted in **Figure 2**.

**Attachment A** of this memo includes a Joint Application Form for Activities Affecting Water Resources in Minnesota, which is submitted to the South Washington Watershed District to request concurrence with the no-wetland determination under the Minnesota Wetland Conservation Act (WCA).

**Review of NWI, Soils, DNR, and NHD Information**

The National Wetlands Inventory (NWI) (Minnesota Geospatial Commons and Minnesota Department of Natural Resources 2019) did not show any wetlands within or near the site boundary (**Figure 3**).

The Soil Survey (USDA NRCS SSURGO 2024) did not identify any hydric soil units mapped within the site boundary. Soil types mapped on or near the property are listed in **Table 2** and depicted in **Figure 4**.

**Table 2. Soil units on the 11245 Point Douglas Drive South site.**

| Symbol | Map unit name | Acres in AOI | Percent of AOI | % Hydric | Hydric Rating |
|---|---|---|---|---|---|
| 8 | Sparta loamy sand, 0 to 2 percent slopes | 2.7 | 26.6% | 0% | Non-Hydric |
| 8B | Sparta loamy sand, 2 to 6 percent slopes | 5.9 | 58.6% | 0% | Non-Hydric |
| 8C | Sparta loamy sand, 6 to 15 percent slopes | 0.0 | 0.1% | 0% | Non-Hydric |
| 327 | Dickman sandy loam, 0 to 2 percent slopes | 1.5 | 14.8% | 0% | Non-Hydric |

The Minnesota DNR Public Waters Inventory (Minnesota Department of Natural Resources 2025) did not show any Public Waters, Watercourses, or Wetlands in or within 1,000-ft the site boundary (**Figure 5**).

The National Hydrography Dataset (U.S. Geological Survey 2023) did not show any surface water features within or near the site boundary (**Figure 6**).

## No-Wetland Determination

The area of lowest elevation in a depression near the center of the site (876 ft MSL) is located in a non-hydric soil unit, was not indicated on wetland mapping resources and did not exhibit any wetland signatures on aerial photography. For these reasons, this area was determined to be non-wetland.

Based on the lack of mapped hydric soil units, lack of mapped water resources and no observations of wetland signatures on aerial imagery, it was determined that no wetlands are present within the Site Boundary.

## Requested Approvals

**Attachment A** of this memo includes a Joint Application Form for Activities Affecting Water Resources in Minnesota, which is submitted to South Washington Watershed District to request concurrence with the no-wetland determination under the Minnesota Wetland Conservation Act (WCA).

# 11245 Point Douglas Drive South

## No Wetland Determination

## Figures:

Figure 1 – Site Location
Figure 2 – Existing Conditions
Figure 3 – National Wetlands Inventory
Figure 4 – Soil Survey
Figure 5 – DNR Public Waters
Figure 6 – National Hydrography Dataset

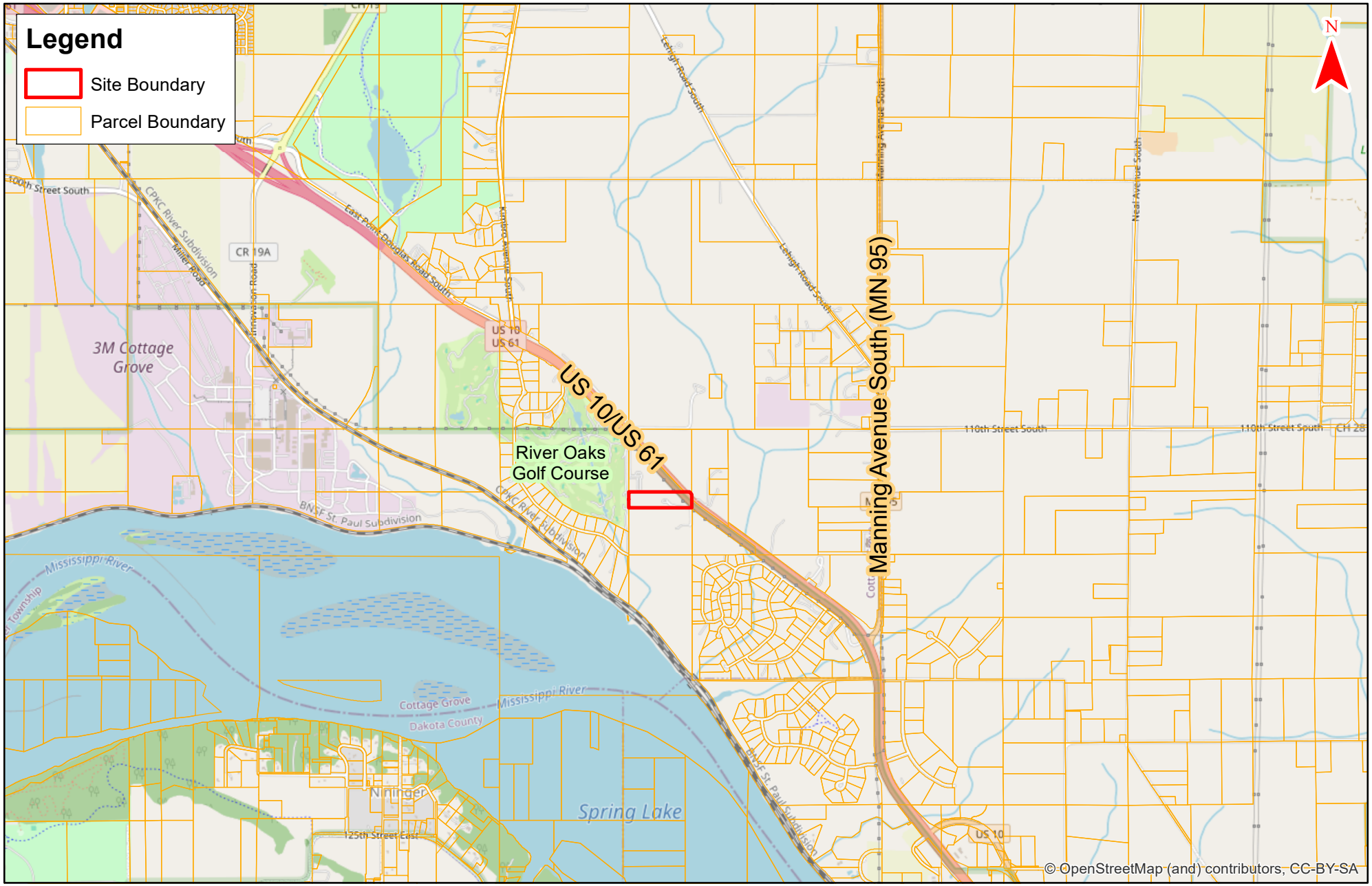


KJOLHAUG ENVIRONMENTAL

0 2,000 Feet

## Figure 1 - Site Location

**11245 Point Douglas Drive South** (KES 2025-223)
**Cottage Grove, Minnesota**

Note: Boundaries indicated on this figure are approximate and do not constitute an official survey product.

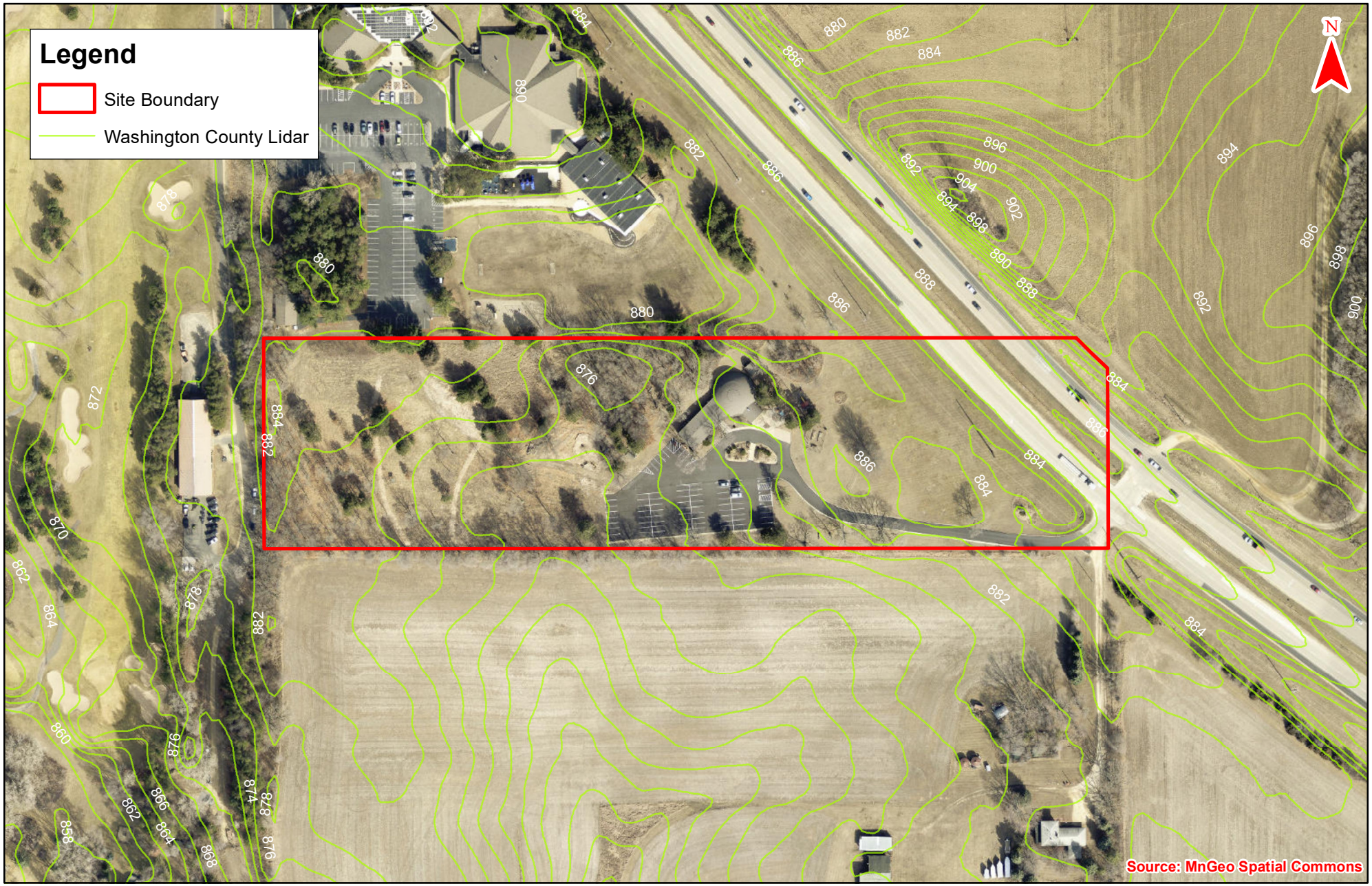


KJOLHAUG ENVIRONMENTAL

0 200 Feet

## Figure 2 - Existing Conditions (2024, Washington County)

**11245 Point Douglas Drive South** (KES 2025-223)
**Cottage Grove, Minnesota**

Note: Boundaries indicated on this figure are approximate and do not constitute an official survey product.

KJOLHAUG ENVIRONMENTAL

0 500 Feet

## Figure 3 - MnDNR National Wetlands Inventory Update

**11245 Point Douglas Drive South** (KES 2025-223)
**Cottage Grove, Minnesota**

Note: Boundaries indicated on this figure are approximate and do not constitute an official survey product.

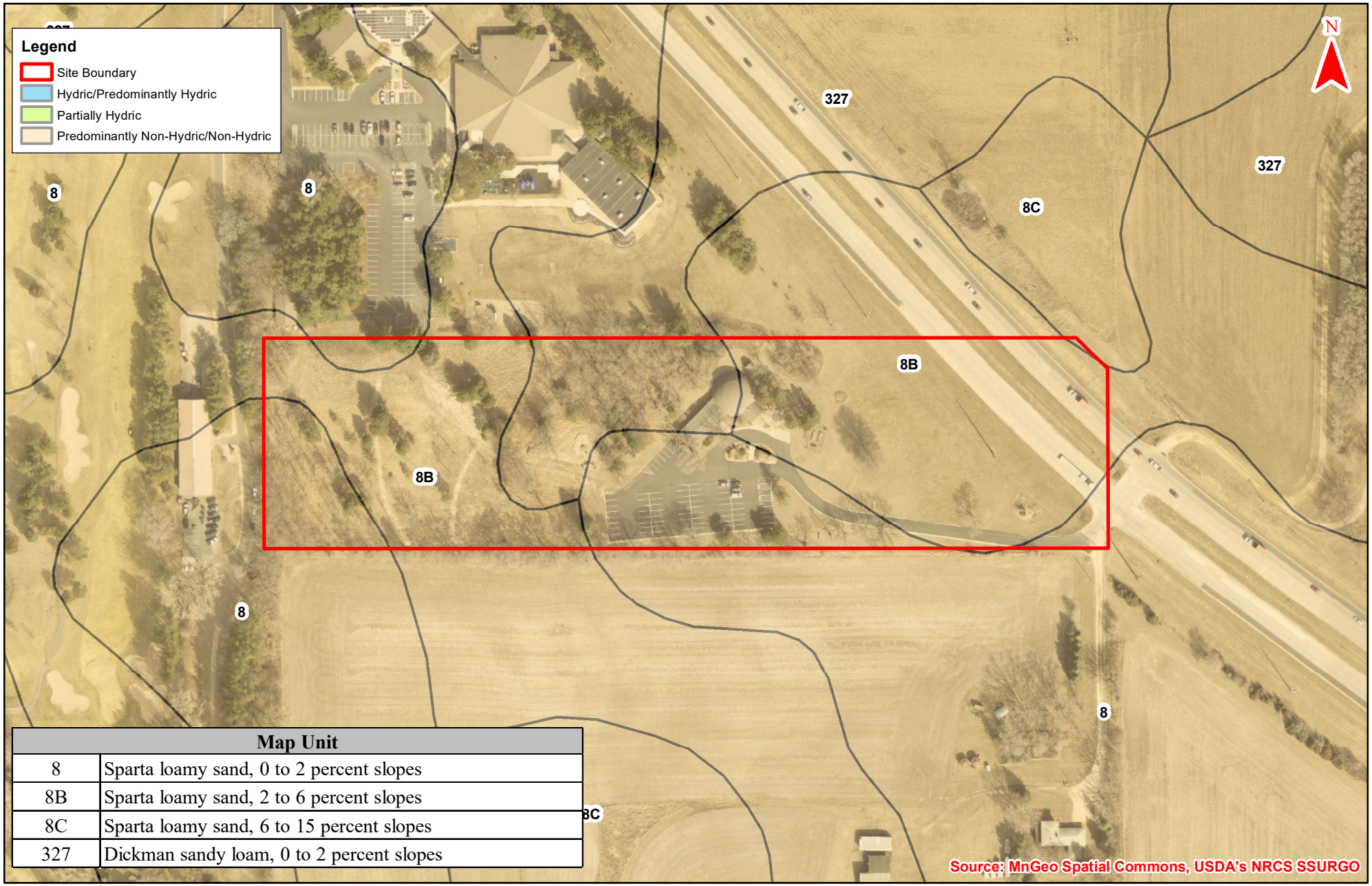


| Map Unit | |
|---|---|
| 8 | Sparta loamy sand, 0 to 2 percent slopes |
| 8B | Sparta loamy sand, 2 to 6 percent slopes |
| 8C | Sparta loamy sand, 6 to 15 percent slopes |
| 327 | Dickman sandy loam, 0 to 2 percent slopes |

KJOLHAUG ENVIRONMENTAL

0 200 Feet

## Figure 4 - Soil Survey

**11245 Point Douglas Drive South** (KES 2025-223)
**Cottage Grove, Minnesota**

Note: Boundaries indicated on this figure are approximate and do not constitute an official survey product.

KJOLHAUG ENVIRONMENTAL

0 1,000 Feet

# Figure 5 - DNR Public Waters Inventory

**11245 Point Douglas Drive South** (KES 2025-223)
**Cottage Grove, Minnesota**

Note: Boundaries indicated on this figure are approximate and do not constitute an official survey product.

KJOLHAUG ENVIRONMENTAL

0 500 Feet

# Figure 6 - National Hydrography Dataset

**11245 Point Douglas Drive South** (KES 2025-223)
**Cottage Grove, Minnesota**

Note: Boundaries indicated on this figure are approximate and do not constitute an official survey product.

# 11245 Point Douglas Drive South

## No Wetland Determination

## Attachment A

## Joint Application Form for Activities Affecting Water Resources in Minnesota

# PART ONE: Applicant Information

If applicant is an entity (company, government entity, partnership, etc.), an authorized contact person must be identified. If the applicant is using an agent (consultant, lawyer, or other third party) and has authorized them to act on their behalf, the agent's contact information must also be provided.

**Applicant/Landowner Name:** New Life Evangelical Free Church; c/o Benjamin Myre
**Mailing Address:** 11245 Point Douglas Dr S, Hastings, MN 55033
**Phone:** 651-437-1545
**E-mail Address:** bcmyre@hotmail.com

**Authorized Contact (do not complete if same as above):**
**Mailing Address:**
**Phone:**
**E-mail Address:**

**Agent Name:** Kjolhaug Environmental Services; c/o Archie MacKinnon
**Mailing Address:** 2500 Shadywood Road Suite 130, Orono, MN 55331
**Phone:** 952-217-7689
**E-mail Address:** archie@kjolhaugenv.com

# PART TWO: Site Location Information

**County: Washington** **City/Township: Cottage Grove**
**Parcel ID and/or Address: PID 3602721230002**
**Legal Description (Section, Township, Range): S: 35, T: 27N, R: 21W**
**Lat/Long (decimal degrees): 44.786087, -92.881318**
**Attach a map showing the location of the site in relation to local streets, roads, highways.**
**Approximate size of site (acres) or if a linear project, length (feet): 10.1 ac.**

If you know that your proposal will require an individual Permit from the U.S. Army Corps of Engineers, you must provide the names and addresses of all property owners adjacent to the project site. This information may be provided by attaching a list to your application or by using block 25 of the Application for Department of the Army permit which can be obtained at:

http://www.mvp.usace.army.mil/Portals/57/docs/regulatory/RegulatoryDocs/engform_4345_2012oct.pdf

# PART THREE: General Project/Site Information

If this application is related to a delineation approval, exemption determination, jurisdictional determination, or other correspondence submitted ***prior to*** this application then describe that here and provide the Corps of Engineers project number.

Describe the project that is being proposed, the project purpose and need, and schedule for implementation and completion. The project description must fully describe the nature and scope of the proposed activity including a description of all project elements that effect aquatic resources (wetland, lake, tributary, etc.) and must also include plans and cross section or profile drawings showing the location, character, and dimensions of all proposed activities and aquatic resource impacts.

Application is for No Wetland Determination concurrence

# PART FOUR: Aquatic Resource Impact[1] Summary

If your proposed project involves a direct or indirect impact to an aquatic resource (wetland, lake, tributary, etc.) identify each impact in the table below. Include all anticipated impacts, including those expected to be temporary. Attach an overhead view map, aerial photo, and/or drawing showing all of the aquatic resources in the project area and the location(s) of the proposed impacts. Label each aquatic resource on the map with a reference number or letter and identify the impacts in the following table.

| **Aquatic Resource ID** (as noted on overhead view) | **Aquatic Resource Type** (wetland, lake, tributary etc.) | **Type of Impact** (fill, excavate, drain, or remove vegetation) | **Duration of Impact** Permanent (P) or Temporary (T)[1] | **Size of Impact**[2] | **Overall Size of Aquatic Resource** [3] | **Existing Plant Community Type(s)** in Impact Area[4] | **County, Major Watershed #, and Bank Service Area #** of Impact Area[5] |
|---|---|---|---|---|---|---|---|
| | | | | | | | |
| | | | | | | | |
| | | | | | | | |
| | | | | | | | |
| | | | | | | | |

[1]If impacts are temporary; enter the duration of the impacts in days next to the "T". For example, a project with a temporary access fill that would be removed after 220 days would be entered "T (220)".
[2]Impacts less than 0.01 acre should be reported in square feet. Impacts 0.01 acre or greater should be reported as acres and rounded to the nearest 0.01 acre. Tributary impacts must be reported in linear feet of impact and an area of impact by indicating first the linear feet of impact along the flowline of the stream followed by the area impact in parentheses). For example, a project that impacts 50 feet of a stream that is 6 feet wide would be reported as 50 ft (300 square feet).
[3]This is generally only applicable if you are applying for a de minimis exemption under MN Rules 8420.0420 Subp. 8, otherwise enter "N/A".
[4]Use *Wetland Plants and Plant Community Types of Minnesota and Wisconsin* 3rd Ed. as modified in MN Rules 8420.0405 Subp. 2.
[5]Refer to Major Watershed and Bank Service Area maps in MN Rules 8420.0522 Subp. 7.

If any of the above identified impacts have already occurred, identify which impacts they are and the circumstances associated with each:

# PART FIVE: Applicant Signature

☐ Check here if you are requesting a pre-application consultation with the Corps and LGU based on the information you have provided. Regulatory entities will not initiate a formal application review if this box is checked.

By signature below, I attest that the information in this application is complete and accurate. I further attest that I possess the authority to undertake the work described herein.

Signature: _____ Date: 12.23.25

I hereby authorize Kjolhaug to act on my behalf as my agent in the processing of this application and to furnish, upon request, supplemental information in support of this application.

**[1] The term "impact" as used in this joint application form is a generic term used for disclosure purposes to identify activities that may require approval from one or more regulatory agencies. For purposes of this form it is not meant to indicate whether or not those activities may require mitigation/replacement.**

# Attachment A
# Request for Delineation Review, Wetland Type Determination, or Jurisdictional Determination

By submission of the enclosed wetland delineation report, I am requesting that the U.S. Army Corps of Engineers, St. Paul District (Corps) and/or the Wetland Conservation Act Local Government Unit (LGU) provide me with the following (check all that apply):

☐ **Wetland Type Confirmation**

☒ **Delineation Concurrence**. Concurrence with a delineation is a written notification from the Corps and a decision from the LGU concurring, not concurring, or commenting on the boundaries of the aquatic resources delineated on the property. Delineation concurrences are generally valid for five years unless site conditions change. Under this request alone, the Corps will not address the jurisdictional status of the aquatic resources on the property, only the boundaries of the resources within the review area (including wetlands, tributaries, lakes, etc.).

☐ **Preliminary Jurisdictional Determination**. A preliminary jurisdictional determination (PJD) is a non-binding written indication from the Corps that waters, including wetlands, identified on a parcel may be waters of the United States. For purposes of computation of impacts and compensatory mitigation requirements, a permit decision made on the basis of a PJD will treat all waters and wetlands in the review area as if they are jurisdictional waters of the U.S. PJDs are advisory in nature and may not be appealed.

☐ **Approved Jurisdictional Determination**. An approved jurisdictional determination (AJD) is an official Corps determination that jurisdictional waters of the United States are either present or absent on the property. AJDs can generally be relied upon by the affected party for five years. An AJD may be appealed through the Corps administrative appeal process.

In order for the Corps and LGU to process your request, the wetland delineation must be prepared in accordance with the 1987 Corps of Engineers Wetland Delineation Manual, any approved Regional Supplements to the 1987 Manual, and the *Guidelines for Submitting Wetland Delineations in Minnesota* (2013).
http://www.mvp.usace.army.mil/Missions/Regulatory/DelineationJDGuidance.aspx

REHDER
& ASSOCIATES, INC.
Civil Engineers & Land Surveyors

# STORM WATER MANAGEMENT REPORT

**FOR**

## NEW LIFE EFREE CHURCH

## 1-28-26

I hereby certify that this plan, specification or report was prepared by me or under my direct supervision and that I am a duly licensed Professional Engineer under the laws of the State of Minnesota.

Report Prepared By:

Benjamin J. Quaas, P.E.

Registration Number: 59732

Report Reviewed By:

Nicholas P. Adam

Nicholas P. Adam, P.E.

Registration Number: 43856

REHDER & ASSOCIATES, INC.
Civil Engineers & Land Surveyors

3440 Federal Drive, Suite 110
Eagan, MN 55122
Direct: 651.337.6729
Office: 651.452.5051
Website: www.rehder.com

**WORKSHEET**

By: BJQ Date: 1/22/2026
Project No: 2393.058 Sheet of
Subject:

## VOLUME CONTROL SIZING CALCULATIONS

**REQUIRED VOLUME:** (1.1 inch off of impervious)

New & Reconstructed Impervious Area = 0.20 Acres

$$= \frac{1.10}{12\text{in./ft}} \times 0.20 \text{ ac} = 0.018 \text{ ac-ft}$$

= **799** **cu.ft.**

**PROVIDED VOLUME** = **1,017** **cu.ft.** (SEE ATTACHED VOLUME WORKSHEET)

Site has Poorly Graded Sands "SP"
Drawdown Time = 48 hours
Proposed Infiltration rate = 0.8 inch/hour
Allowable Depth of Infiltration:
0.8 in/hr x 48 hours = 38.4 inches (3.2 feet)

Basin Bottom Elevation: 877.0
Basin Outlet Elevation: 878.5
Proposed Depth of Infiltration: **1.5** **ft**

## Stage-Area-Storage for Pond 9P: PROPOSED INFILTRATION BASIN

| Elevation (feet) | Surface (sq-ft) | Storage (cubic-feet) |
|---|---|---|
| 877.00 | 375 | 0 |
| 877.05 | 392 | 19 |
| 877.10 | 409 | 39 |
| 877.15 | 427 | 60 |
| 877.20 | 445 | 82 |
| 877.25 | 463 | 105 |
| 877.30 | 482 | 128 |
| 877.35 | 501 | 153 |
| 877.40 | 521 | 178 |
| 877.45 | 541 | 205 |
| 877.50 | 561 | 233 |
| 877.55 | 582 | 261 |
| 877.60 | 603 | 291 |
| 877.65 | 624 | 321 |
| 877.70 | 646 | 353 |
| 877.75 | 668 | 386 |
| 877.80 | 691 | 420 |
| 877.85 | 714 | 455 |
| 877.90 | 737 | 491 |
| 877.95 | 761 | 529 |
| 878.00 | 785 | 568 |
| 878.05 | 807 | 607 |
| 878.10 | 829 | 648 |
| 878.15 | 852 | 690 |
| 878.20 | 874 | 733 |
| 878.25 | 897 | 778 |
| 878.30 | 921 | 823 |
| 878.35 | 945 | 870 |
| 878.40 | 969 | 918 |
| 878.45 | 993 | 967 |
| 878.50 | 1,017 | 1,017 |
| 878.55 | 1,042 | 1,068 |
| 878.60 | 1,068 | 1,121 |
| 878.65 | 1,093 | 1,175 |
| 878.70 | 1,119 | 1,230 |
| 878.75 | 1,145 | 1,287 |
| 878.80 | 1,171 | 1,345 |
| 878.85 | 1,198 | 1,404 |
| 878.90 | 1,225 | 1,465 |
| 878.95 | 1,252 | 1,527 |
| 879.00 | 1,280 | 1,590 |
| 879.05 | 1,309 | 1,655 |
| 879.10 | 1,339 | 1,721 |
| 879.15 | 1,368 | 1,789 |
| 879.20 | 1,399 | 1,858 |
| 879.25 | 1,429 | 1,928 |
| 879.30 | 1,460 | 2,001 |
| 879.35 | 1,491 | 2,074 |
| 879.40 | 1,522 | 2,150 |
| 879.45 | 1,554 | 2,227 |
| 879.50 | 1,586 | 2,305 |
| 879.55 | 1,619 | 2,385 |
| 879.60 | 1,651 | 2,467 |
| 879.65 | 1,684 | 2,550 |
| 879.70 | 1,718 | 2,635 |
| 879.75 | 1,751 | 2,722 |
| 879.80 | 1,786 | 2,811 |
| 879.85 | 1,820 | 2,901 |
| 879.90 | 1,855 | 2,993 |
| 879.95 | 1,890 | 3,086 |
| 880.00 | **1,925** | **3,182** |

INFILTRATION VOLUME PROVIDED

## Project Information

| | |
|---|---|
| Calculator Version: | Version 4: July 2020 |
| Project Name: | New Life EFREE Church |
| User Name / Company Name: | Rehder & Associates, Inc. |
| Date: | 1-28-26 |
| Project Description: | |
| Construction Permit?: | Yes |

## Site Information

| | |
|---|---|
| Retention Requirement (inches): | 1.1 |
| Site's Zip Code: | 55033 |
| Annual Rainfall (inches): | 31.4 |
| Phosphorus EMC (mg/l): | 0.3 |
| TSS EMC (mg/l): | 54.5 |

**Total Site Area**

| Land Cover | A Soils (acres) | B Soils (acres) | C Soils (acres) | D Soils (acres) | Total (acres) |
|---|---|---|---|---|---|
| Forest/Open Space - Undisturbed, protected forest/open space or reforested land | .01 | | | | 0.01 |
| Managed Turf - disturbed, graded for yards or other turf to be mowed/managed | .53 | | | | 0.53 |
| | | | Impervious Area (acres) | | .19 |
| | | | | Total Area (acres) | 0.73 |

**Site Areas Routed to BMPs**

| Land Cover | A Soils (acres) | B Soils (acres) | C Soils (acres) | D Soils (acres) | Total (acres) |
|---|---|---|---|---|---|
| Forest/Open Space - Undisturbed, protected forest/open space or reforested land | 0.01 | | | | 0.01 |
| Managed Turf - disturbed, graded for yards or other turf to be mowed/managed | 0.53 | | | | 0.53 |
| | | | Impervious Area (acres) | | 0.19 |
| | | | | Total Area (acres) | 0.73 |

## Summary Information

### Performance Goal Requirement

| | | |
|---|---|---|
| Performance goal volume retention requirement: | 759 | ft3 |
| Volume removed by BMPs towards performance goal: | 759 | $ft^3$ |
| **Percent volume removed towards performance goal** | **100** | **%** |

### Annual Volume and Pollutant Load Reductions

| | | |
|---|---|---|
| Post development annual runoff volume | 0.6128 | acre-ft |
| Annual runoff volume removed by BMPs: | 0.5837 | acre-ft |
| **Percent annual runoff volume removed:** | **95** | **%** |
| | | |
| Post development annual particulate P load: | 0.275 | lbs |
| Annual particulate P removed by BMPs: | 0.262 | lbs |
| Post development annual dissolved P load: | 0.225 | lbs |
| Annual dissolved P removed by BMPs: | 0.214 | lbs |
| Total P removed by BMPs | 0.476 | lbs |
| **Percent annual total phosphorus removed:** | **95** | **%** |
| | | |
| Post development annual TSS load: | 90.8 | lbs |
| Annual TSS removed by BMPs: | 86.5 | lbs |
| **Percent annual TSS removed:** | **95** | **%** |

## BMP Summary

### Performance Goal Summary

| BMP Name | BMP Volume Capacity (ft3) | Volume Recieved (ft3) | Volume Retained (ft3) | Volume Outflow (ft3) | Percent Retained (%) |
|---|---|---|---|---|---|
| 1 - Infiltration basin/Infiltration trench (abc | 1044 | 759 | 759 | 0 | 100 |

### Annual Volume Summary

| BMP Name | Volume From Direct Watershed (acre-ft) | Volume From Upstream BMPs (acre-ft) | Volume Retained (acre-ft) | Volume outflow (acre-ft) | Percent Retained (%) |
|---|---|---|---|---|---|
| 1 - Infiltration basin/Infiltration trench (abc | 0.6128 | 0 | 0.5837 | 0.0291 | 95 |

### Particulate Phosphorus Summary

| BMP Name | Load From Direct Watershed (lbs) | Load From Upstream BMPs (lbs) | Load Retained (lbs) | Outflow Load (lbs) | Percent Retained (%) |
|---|---|---|---|---|---|
| 1 - Infiltration basin/Infiltration trench (abc | 0.275 | 0 | 0.2619 | 0.0131 | 95 |

**Dissolved Phosphorus Summary**

| BMP Name | Load From Direct Watershed (lbs) | Load From Upstream BMPs (lbs) | Load Retained (lbs) | Outflow Load (lbs) | Percent Retained (%) |
|---|---|---|---|---|---|
| 1 - Infiltration basin/Infiltration trench (abc | 0.225 | 0 | 0.2143 | 0.0107 | 95 |

**Total Phosphorus Summary**

| BMP Name | Load From Direct Watershed (lbs) | Load From Upstream BMPs (lbs) | Load Retained (lbs) | Outflow Load (lbs) | Percent Retained (%) |
|---|---|---|---|---|---|
| 1 - Infiltration basin/Infiltration trench (abc | 0.5 | 0 | 0.4762 | 0.0238 | 95 |

**TSS Summary**

| BMP Name | Load From Direct Watershed (lbs) | Load From Upstream BMPs (lbs) | Load Retained (lbs) | Outflow Load (lbs) | Percent Retained (%) |
|---|---|---|---|---|---|
| 1 - Infiltration basin/Infiltration trench (abc | 90.84 | 0 | 86.52 | 4.3200000000 | 95 |

## BMP Schematic

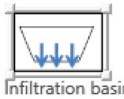

1 - Infiltration basin/
Infiltration trench

REHDER & ASSOCIATES, INC.
Civil Engineers & Land Surveyors

3440 Federal Drive, Suite 110
Eagan, MN 55122
Direct: 651.337.6729
Office: 651.452.5051
Website: www.rehder.com

# RATE CONTROL SUMMARY

## RUNOFF TO SOUTH

| Storm Event | Existing Rate Offsite | Proposed Rate Offsite |
|---|---|---|
| | CFS | CFS |
| | | |
| 2-YR | 0.1 | 0.1 |
| | | |
| 10-YR | 0.8 | 0.8 |
| | | |
| 100-YR | 6.6 | 6.4 |

## TABLE OF CONTENTS

**Project Reports**
1 Routing Diagram
2 Rainfall Events Listing (selected events)
3 Area Listing (all nodes)

**2-Year Event**
4 Node Listing
5 Subcat 1S: EXIST TO LOW SPOT
6 Subcat 2S: PROP TO INFILTRATION BASIN
6 Subcat 6S: EXIST BYPASS TO SOUTH SWALE
7 Subcat 9S: PROP BYPASS TO SOUTH AND SWALE
7 Subcat 10S: PROP TO LOW SPOT
7 Reach 7R: EXIST TO SWALE AND SOUTH
8 Reach 10R: PROP TO SWALE AND SOUTH
8 Pond 5P: EXISTING LOW SPOT
8 Pond 8P: EXIST LOW SPOT (PROPOSED CONDITIONS)
9 Pond 9P: PROPOSED INFILTRATION BASIN

**10-Year Event**
10 Node Listing
11 Subcat 1S: EXIST TO LOW SPOT
12 Subcat 2S: PROP TO INFILTRATION BASIN
12 Subcat 6S: EXIST BYPASS TO SOUTH SWALE
13 Subcat 9S: PROP BYPASS TO SOUTH AND SWALE
13 Subcat 10S: PROP TO LOW SPOT
13 Reach 7R: EXIST TO SWALE AND SOUTH
14 Reach 10R: PROP TO SWALE AND SOUTH
14 Pond 5P: EXISTING LOW SPOT
14 Pond 8P: EXIST LOW SPOT (PROPOSED CONDITIONS)
15 Pond 9P: PROPOSED INFILTRATION BASIN

**100-Year Event**
16 Node Listing
17 Subcat 1S: EXIST TO LOW SPOT
18 Subcat 2S: PROP TO INFILTRATION BASIN
18 Subcat 6S: EXIST BYPASS TO SOUTH SWALE
19 Subcat 9S: PROP BYPASS TO SOUTH AND SWALE
19 Subcat 10S: PROP TO LOW SPOT
19 Reach 7R: EXIST TO SWALE AND SOUTH
20 Reach 10R: PROP TO SWALE AND SOUTH
20 Pond 5P: EXISTING LOW SPOT
20 Pond 8P: EXIST LOW SPOT (PROPOSED CONDITIONS)
21 Pond 9P: PROPOSED INFILTRATION BASIN

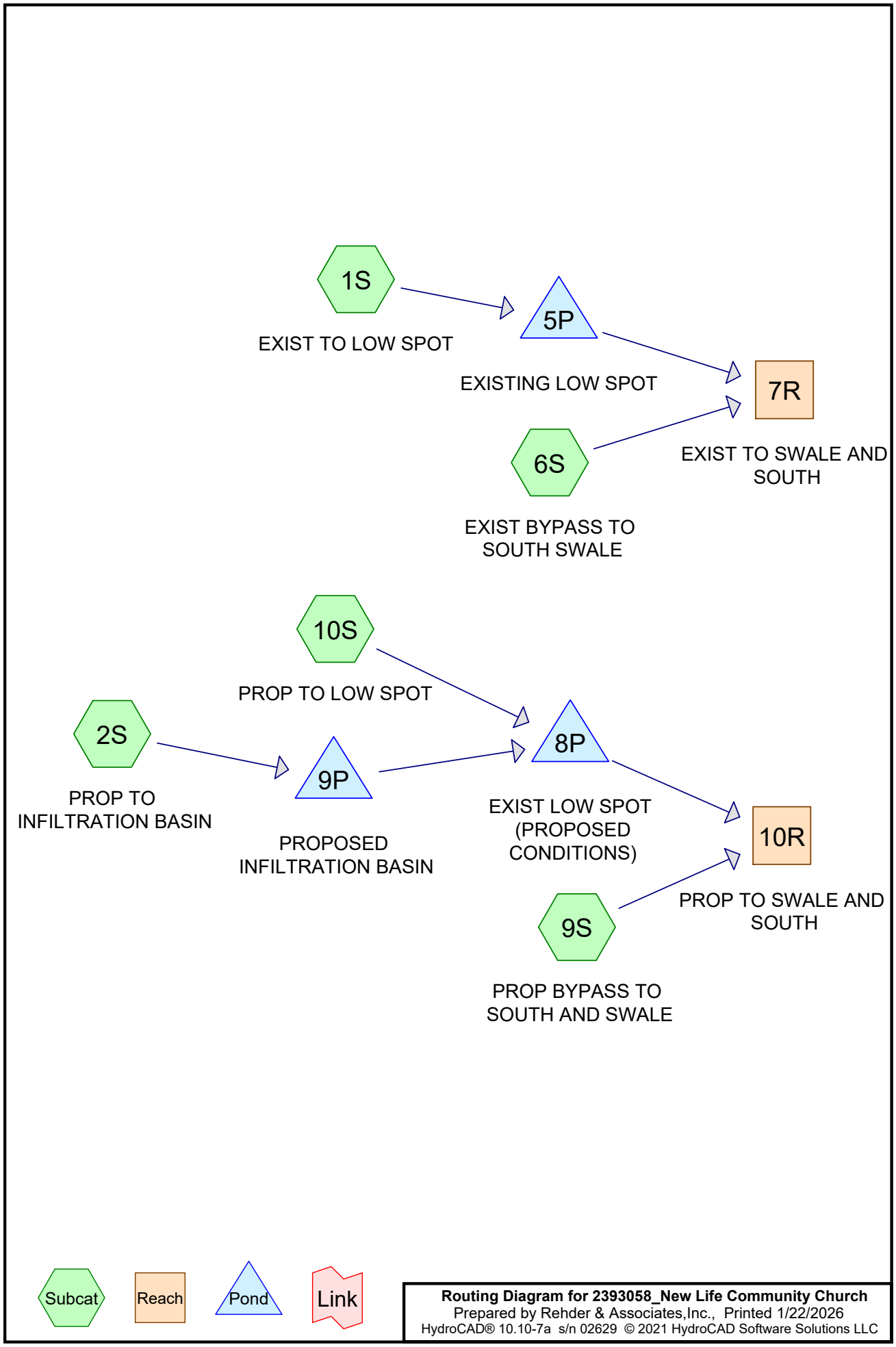


**Routing Diagram for 2393058_New Life Community Church**
Prepared by Rehder & Associates,Inc., Printed 1/22/2026
HydroCAD® 10.10-7a s/n 02629 © 2021 HydroCAD Software Solutions LLC

## Rainfall Events Listing (selected events)

| Event# | Event Name | Storm Type | Curve | Mode | Duration (hours) | B/B | Depth (inches) | AMC |
|---|---|---|---|---|---|---|---|---|
| 1 | 2-Year | MSE 24-hr | 3 | Default | 24.00 | 1 | 2.80 | 2 |
| 2 | 10-Year | MSE 24-hr | 3 | Default | 24.00 | 1 | 4.16 | 2 |
| 3 | 100-Year | MSE 24-hr | 3 | Default | 24.00 | 1 | 7.20 | 2 |

## Area Listing (all nodes)

| Area (acres) | CN | Description (subcatchment-numbers) |
|---|---|---|
| 4.890 | 39 | >75% Grass cover, Good, HSG A (1S, 2S, 6S, 9S, 10S) |
| 2.340 | 98 | IMPERVIOUS (1S, 2S, 6S, 9S, 10S) |
| 5.250 | 30 | Woods, Good, HSG A (1S, 2S, 6S, 9S, 10S) |

Time span=0.00-48.00 hrs, dt=0.05 hrs, 961 points
Runoff by SCS TR-20 method, UH=SCS, Weighted-CN
Reach routing by Stor-Ind+Trans method - Pond routing by Stor-Ind method

**Subcatchment 1S: EXIST TO LOW SPOT** Runoff Area=1.770 ac 5.08% Impervious Runoff Depth=0.00"
Tc=25.0 min CN=37 Runoff=0.00 cfs 0.000 af

**Subcatchment 2S: PROP TO** Runoff Area=0.730 ac 26.03% Impervious Runoff Depth=0.13"
Tc=15.0 min CN=54 Runoff=0.03 cfs 0.008 af

**Subcatchment 6S: EXIST BYPASS TO** Runoff Area=4.470 ac 23.04% Impervious Runoff Depth=0.05"
Tc=25.0 min CN=49 Runoff=0.04 cfs 0.017 af

**Subcatchment 9S: PROP BYPASS TO** Runoff Area=4.310 ac 22.74% Impervious Runoff Depth=0.05"
Tc=25.0 min CN=49 Runoff=0.04 cfs 0.017 af

**Subcatchment 10S: PROP TO LOW SPOT** Runoff Area=1.200 ac 4.17% Impervious Runoff Depth=0.00"
Tc=20.0 min CN=35 Runoff=0.00 cfs 0.000 af

**Reach 7R: EXIST TO SWALE AND SOUTH** Inflow=0.04 cfs 0.017 af
Outflow=0.04 cfs 0.017 af

**Reach 10R: PROP TO SWALE AND SOUTH** Inflow=0.04 cfs 0.017 af
Outflow=0.04 cfs 0.017 af

**Pond 5P: EXISTING LOW SPOT** Peak Elev=875.00' Storage=0 cf Inflow=0.00 cfs 0.000 af
Discarded=0.00 cfs 0.000 af Primary=0.00 cfs 0.000 af Outflow=0.00 cfs 0.000 af

**Pond 8P: EXIST LOW SPOT (PROPOSED** Peak Elev=875.00' Storage=0 cf Inflow=0.00 cfs 0.000 af
Discarded=0.00 cfs 0.000 af Primary=0.00 cfs 0.000 af Outflow=0.00 cfs 0.000 af

**Pond 9P: PROPOSED INFILTRATION** Peak Elev=877.24' Storage=101 cf Inflow=0.03 cfs 0.008 af
Discarded=0.01 cfs 0.008 af Primary=0.00 cfs 0.000 af Outflow=0.01 cfs 0.008 af

## Summary for Subcatchment 1S: EXIST TO LOW SPOT

Runoff = 0.00 cfs @ 0.00 hrs, Volume= 0.000 af, Depth= 0.00"
Routed to Pond 5P : EXISTING LOW SPOT

Runoff by SCS TR-20 method, UH=SCS, Weighted-CN, Time Span= 0.00-48.00 hrs, dt= 0.05 hrs
MSE 24-hr 3 2-Year Rainfall=2.80"

| | Area (ac) | CN | Description |
|---|---|---|---|
| | 1.000 | 30 | Woods, Good, HSG A |
| * | 0.090 | 98 | IMPERVIOUS |
| | 0.680 | 39 | >75% Grass cover, Good, HSG A |
| | 1.770 | 37 | Weighted Average |
| | 1.680 | | 94.92% Pervious Area |
| | 0.090 | | 5.08% Impervious Area |

| Tc (min) | Length (feet) | Slope (ft/ft) | Velocity (ft/sec) | Capacity (cfs) | Description |
|---|---|---|---|---|---|
| 25.0 | | | | | **Direct Entry,** |

## Summary for Subcatchment 2S: PROP TO INFILTRATION BASIN

Runoff = 0.03 cfs @ 12.55 hrs, Volume= 0.008 af, Depth= 0.13"
Routed to Pond 9P : PROPOSED INFILTRATION BASIN

Runoff by SCS TR-20 method, UH=SCS, Weighted-CN, Time Span= 0.00-48.00 hrs, dt= 0.05 hrs
MSE 24-hr 3 2-Year Rainfall=2.80"

| | Area (ac) | CN | Description |
|---|---|---|---|
| * | 0.190 | 98 | IMPERVIOUS |
| | 0.010 | 30 | Woods, Good, HSG A |
| | 0.530 | 39 | >75% Grass cover, Good, HSG A |
| | 0.730 | 54 | Weighted Average |
| | 0.540 | | 73.97% Pervious Area |
| | 0.190 | | 26.03% Impervious Area |

| Tc (min) | Length (feet) | Slope (ft/ft) | Velocity (ft/sec) | Capacity (cfs) | Description |
|---|---|---|---|---|---|
| 15.0 | | | | | **Direct Entry,** |

## Summary for Subcatchment 6S: EXIST BYPASS TO SOUTH SWALE

Runoff = 0.04 cfs @ 13.57 hrs, Volume= 0.017 af, Depth= 0.05"
Routed to Reach 7R : EXIST TO SWALE AND SOUTH

Runoff by SCS TR-20 method, UH=SCS, Weighted-CN, Time Span= 0.00-48.00 hrs, dt= 0.05 hrs
MSE 24-hr 3 2-Year Rainfall=2.80"

| | Area (ac) | CN | Description |
|---|---|---|---|
| * | 1.030 | 98 | IMPERVIOUS |
| | 1.740 | 30 | Woods, Good, HSG A |
| | 1.700 | 39 | >75% Grass cover, Good, HSG A |
| | 4.470 | 49 | Weighted Average |
| | 3.440 | | 76.96% Pervious Area |
| | 1.030 | | 23.04% Impervious Area |

| Tc (min) | Length (feet) | Slope (ft/ft) | Velocity (ft/sec) | Capacity (cfs) | Description |
|---|---|---|---|---|---|
| 25.0 | | | | | **Direct Entry,** |

## Summary for Subcatchment 9S: PROP BYPASS TO SOUTH AND SWALE

Runoff = 0.04 cfs @ 13.57 hrs, Volume= 0.017 af, Depth= 0.05"
Routed to Reach 10R : PROP TO SWALE AND SOUTH

Runoff by SCS TR-20 method, UH=SCS, Weighted-CN, Time Span= 0.00-48.00 hrs, dt= 0.05 hrs
MSE 24-hr 3 2-Year Rainfall=2.80"

| | Area (ac) | CN | Description |
|---|---|---|---|
| * | 0.980 | 98 | IMPERVIOUS |
| | 1.690 | 30 | Woods, Good, HSG A |
| | 1.640 | 39 | >75% Grass cover, Good, HSG A |
| | 4.310 | 49 | Weighted Average |
| | 3.330 | | 77.26% Pervious Area |
| | 0.980 | | 22.74% Impervious Area |

| Tc (min) | Length (feet) | Slope (ft/ft) | Velocity (ft/sec) | Capacity (cfs) | Description |
|---|---|---|---|---|---|
| 25.0 | | | | | **Direct Entry,** |

## Summary for Subcatchment 10S: PROP TO LOW SPOT

Runoff = 0.00 cfs @ 0.00 hrs, Volume= 0.000 af, Depth= 0.00"
Routed to Pond 8P : EXIST LOW SPOT (PROPOSED CONDITIONS)

Runoff by SCS TR-20 method, UH=SCS, Weighted-CN, Time Span= 0.00-48.00 hrs, dt= 0.05 hrs
MSE 24-hr 3 2-Year Rainfall=2.80"

| | Area (ac) | CN | Description |
|---|---|---|---|
| * | 0.050 | 98 | IMPERVIOUS |
| | 0.810 | 30 | Woods, Good, HSG A |
| | 0.340 | 39 | >75% Grass cover, Good, HSG A |
| | 1.200 | 35 | Weighted Average |
| | 1.150 | | 95.83% Pervious Area |
| | 0.050 | | 4.17% Impervious Area |

| Tc (min) | Length (feet) | Slope (ft/ft) | Velocity (ft/sec) | Capacity (cfs) | Description |
|---|---|---|---|---|---|
| 20.0 | | | | | **Direct Entry,** |

## Summary for Reach 7R: EXIST TO SWALE AND SOUTH

Inflow Area = 6.240 ac, 17.95% Impervious, Inflow Depth = 0.03" for 2-Year event
Inflow = 0.04 cfs @ 13.57 hrs, Volume= 0.017 af
Outflow = 0.04 cfs @ 13.57 hrs, Volume= 0.017 af, Atten= 0%, Lag= 0.0 min

Routing by Stor-Ind+Trans method, Time Span= 0.00-48.00 hrs, dt= 0.05 hrs

## Summary for Reach 10R: PROP TO SWALE AND SOUTH

Inflow Area = 6.240 ac, 19.55% Impervious, Inflow Depth = 0.03" for 2-Year event
Inflow = 0.04 cfs @ 13.57 hrs, Volume= 0.017 af
Outflow = 0.04 cfs @ 13.57 hrs, Volume= 0.017 af, Atten= 0%, Lag= 0.0 min

Routing by Stor-Ind+Trans method, Time Span= 0.00-48.00 hrs, dt= 0.05 hrs

## Summary for Pond 5P: EXISTING LOW SPOT

Inflow Area = 1.770 ac, 5.08% Impervious, Inflow Depth = 0.00" for 2-Year event
Inflow = 0.00 cfs @ 0.00 hrs, Volume= 0.000 af
Outflow = 0.00 cfs @ 0.00 hrs, Volume= 0.000 af, Atten= 0%, Lag= 0.0 min
Discarded = 0.00 cfs @ 0.00 hrs, Volume= 0.000 af
Primary = 0.00 cfs @ 0.00 hrs, Volume= 0.000 af
Routed to Reach 7R : EXIST TO SWALE AND SOUTH

Routing by Stor-Ind method, Time Span= 0.00-48.00 hrs, dt= 0.05 hrs
Peak Elev= 875.00' @ 0.00 hrs Surf.Area= 15 sf Storage= 0 cf

Plug-Flow detention time= (not calculated: initial storage exceeds outflow)
Center-of-Mass det. time= (not calculated: no inflow)

| Volume | Invert | Avail.Storage | Storage Description |
|---|---|---|---|
| #1 | 875.00' | 3,574 cf | **Custom Stage Data (Irregular)** Listed below (Recalc) |

| Elevation (feet) | Surf.Area (sq-ft) | Perim. (feet) | Inc.Store (cubic-feet) | Cum.Store (cubic-feet) | Wet.Area (sq-ft) |
|---|---|---|---|---|---|
| 875.00 | 15 | 15.0 | 0 | 0 | 15 |
| 875.25 | 785 | 125.0 | 76 | 76 | 1,241 |
| 875.50 | 2,790 | 230.0 | 421 | 497 | 4,207 |
| 875.75 | 6,055 | 305.0 | 1,080 | 1,577 | 7,401 |
| 876.00 | 10,095 | 410.0 | 1,997 | 3,574 | 13,376 |

| Device | Routing | Invert | Outlet Devices |
|---|---|---|---|
| #1 | Primary | 875.65' | **Asymmetrical Weir, C= 3.27**<br>Offset (feet) 0.00 10.00 40.00 48.00<br>Height (feet) 0.35 0.05 0.00 0.35 |
| #2 | Discarded | 875.00' | **0.800 in/hr Exfiltration over Surface area** |

**Discarded OutFlow** Max=0.00 cfs @ 0.00 hrs HW=875.00' (Free Discharge)
↑—**2=Exfiltration** (Passes 0.00 cfs of 0.00 cfs potential flow)

**Primary OutFlow** Max=0.00 cfs @ 0.00 hrs HW=875.00' (Free Discharge)
↑—**1=Asymmetrical Weir** ( Controls 0.00 cfs)

## Summary for Pond 8P: EXIST LOW SPOT (PROPOSED CONDITIONS)

Inflow Area = 1.930 ac, 12.44% Impervious, Inflow Depth = 0.00" for 2-Year event
Inflow = 0.00 cfs @ 0.00 hrs, Volume= 0.000 af
Outflow = 0.00 cfs @ 0.00 hrs, Volume= 0.000 af, Atten= 0%, Lag= 0.0 min
Discarded = 0.00 cfs @ 0.00 hrs, Volume= 0.000 af
Primary = 0.00 cfs @ 0.00 hrs, Volume= 0.000 af
Routed to Reach 10R : PROP TO SWALE AND SOUTH

Routing by Stor-Ind method, Time Span= 0.00-48.00 hrs, dt= 0.05 hrs
Peak Elev= 875.00' @ 0.00 hrs Surf.Area= 15 sf Storage= 0 cf

Plug-Flow detention time= (not calculated: initial storage exceeds outflow)
Center-of-Mass det. time= (not calculated: no inflow)

| Volume | Invert | Avail.Storage | Storage Description |
|---|---|---|---|
| #1 | 875.00' | 3,574 cf | **Custom Stage Data (Irregular)** Listed below (Recalc) |

| Elevation (feet) | Surf.Area (sq-ft) | Perim. (feet) | Inc.Store (cubic-feet) | Cum.Store (cubic-feet) | Wet.Area (sq-ft) |
|---|---|---|---|---|---|
| 875.00 | 15 | 15.0 | 0 | 0 | 15 |
| 875.25 | 785 | 125.0 | 76 | 76 | 1,241 |
| 875.50 | 2,790 | 230.0 | 421 | 497 | 4,207 |
| 875.75 | 6,055 | 305.0 | 1,080 | 1,577 | 7,401 |
| 876.00 | 10,095 | 410.0 | 1,997 | 3,574 | 13,376 |

| Device | Routing | Invert | Outlet Devices |
|---|---|---|---|
| #1 | Primary | 875.65' | **Asymmetrical Weir, C= 3.27**<br>Offset (feet) 0.00 10.00 40.00 48.00<br>Height (feet) 0.35 0.05 0.00 0.35 |
| #2 | Discarded | 875.00' | **0.800 in/hr Exfiltration over Surface area** |

**Discarded OutFlow** Max=0.00 cfs @ 0.00 hrs HW=875.00' (Free Discharge)
↑—**2=Exfiltration** (Passes 0.00 cfs of 0.00 cfs potential flow)

**Primary OutFlow** Max=0.00 cfs @ 0.00 hrs HW=875.00' (Free Discharge)
↑—**1=Asymmetrical Weir** ( Controls 0.00 cfs)

## Summary for Pond 9P: PROPOSED INFILTRATION BASIN

Inflow Area = 0.730 ac, 26.03% Impervious, Inflow Depth = 0.13" for 2-Year event
Inflow = 0.03 cfs @ 12.55 hrs, Volume= 0.008 af
Outflow = 0.01 cfs @ 15.24 hrs, Volume= 0.008 af, Atten= 74%, Lag= 161.7 min
Discarded = 0.01 cfs @ 15.24 hrs, Volume= 0.008 af
Primary = 0.00 cfs @ 0.00 hrs, Volume= 0.000 af
Routed to Pond 8P : EXIST LOW SPOT (PROPOSED CONDITIONS)

Routing by Stor-Ind method, Time Span= 0.00-48.00 hrs, dt= 0.05 hrs
Peak Elev= 877.24' @ 15.24 hrs Surf.Area= 460 sf Storage= 101 cf

Plug-Flow detention time= 134.5 min calculated for 0.008 af (100% of inflow)
Center-of-Mass det. time= 134.5 min ( 1,081.0 - 946.5 )

| Volume | Invert | Avail.Storage | Storage Description |
|---|---|---|---|
| #1 | 877.00' | 3,182 cf | **Custom Stage Data (Irregular)** Listed below (Recalc) |

| Elevation (feet) | Surf.Area (sq-ft) | Perim. (feet) | Inc.Store (cubic-feet) | Cum.Store (cubic-feet) | Wet.Area (sq-ft) |
|---|---|---|---|---|---|
| 877.00 | 375 | 100.0 | 0 | 0 | 375 |
| 878.00 | 785 | 140.0 | 568 | 568 | 1,148 |
| 879.00 | 1,280 | 165.0 | 1,022 | 1,590 | 1,774 |
| 880.00 | 1,925 | 230.0 | 1,592 | 3,182 | 3,827 |

| Device | Routing | Invert | Outlet Devices |
|---|---|---|---|
| #1 | Primary | 878.50' | **Custom Weir/Orifice, Cv= 2.62 (C= 3.28)**<br>Head (feet) 0.00 1.50<br>Width (feet) 4.00 13.00 |
| #2 | Discarded | 877.00' | **0.800 in/hr Exfiltration over Surface area** |

**Discarded OutFlow** Max=0.01 cfs @ 15.24 hrs HW=877.24' (Free Discharge)
↑—**2=Exfiltration** (Exfiltration Controls 0.01 cfs)

**Primary OutFlow** Max=0.00 cfs @ 0.00 hrs HW=877.00' (Free Discharge)
↑—**1=Custom Weir/Orifice** ( Controls 0.00 cfs)

Time span=0.00-48.00 hrs, dt=0.05 hrs, 961 points
Runoff by SCS TR-20 method, UH=SCS, Weighted-CN
Reach routing by Stor-Ind+Trans method - Pond routing by Stor-Ind method

**Subcatchment 1S: EXIST TO LOW SPOT** Runoff Area=1.770 ac 5.08% Impervious Runoff Depth=0.03"
Tc=25.0 min CN=37 Runoff=0.01 cfs 0.005 af

**Subcatchment 2S: PROP TO** Runoff Area=0.730 ac 26.03% Impervious Runoff Depth=0.55"
Tc=15.0 min CN=54 Runoff=0.35 cfs 0.033 af

**Subcatchment 6S: EXIST BYPASS TO** Runoff Area=4.470 ac 23.04% Impervious Runoff Depth=0.35"
Tc=25.0 min CN=49 Runoff=0.78 cfs 0.129 af

**Subcatchment 9S: PROP BYPASS TO** Runoff Area=4.310 ac 22.74% Impervious Runoff Depth=0.35"
Tc=25.0 min CN=49 Runoff=0.75 cfs 0.124 af

**Subcatchment 10S: PROP TO LOW SPOT** Runoff Area=1.200 ac 4.17% Impervious Runoff Depth=0.01"
Tc=20.0 min CN=35 Runoff=0.00 cfs 0.001 af

**Reach 7R: EXIST TO SWALE AND SOUTH** Inflow=0.78 cfs 0.129 af
Outflow=0.78 cfs 0.129 af

**Reach 10R: PROP TO SWALE AND SOUTH** Inflow=0.75 cfs 0.124 af
Outflow=0.75 cfs 0.124 af

**Pond 5P: EXISTING LOW SPOT** Peak Elev=875.15' Storage=22 cf Inflow=0.01 cfs 0.005 af
Discarded=0.01 cfs 0.005 af Primary=0.00 cfs 0.000 af Outflow=0.01 cfs 0.005 af

**Pond 8P: EXIST LOW SPOT (PROPOSED** Peak Elev=875.06' Storage=3 cf Inflow=0.00 cfs 0.001 af
Discarded=0.00 cfs 0.001 af Primary=0.00 cfs 0.000 af Outflow=0.00 cfs 0.001 af

**Pond 9P: PROPOSED INFILTRATION** Peak Elev=878.36' Storage=880 cf Inflow=0.35 cfs 0.033 af
Discarded=0.02 cfs 0.033 af Primary=0.00 cfs 0.000 af Outflow=0.02 cfs 0.033 af

## Summary for Subcatchment 1S: EXIST TO LOW SPOT

Runoff = 0.01 cfs @ 15.13 hrs, Volume= 0.005 af, Depth= 0.03"
Routed to Pond 5P : EXISTING LOW SPOT

Runoff by SCS TR-20 method, UH=SCS, Weighted-CN, Time Span= 0.00-48.00 hrs, dt= 0.05 hrs
MSE 24-hr 3 10-Year Rainfall=4.16"

| | Area (ac) | CN | Description |
|---|---|---|---|
| | 1.000 | 30 | Woods, Good, HSG A |
| * | 0.090 | 98 | IMPERVIOUS |
| | 0.680 | 39 | >75% Grass cover, Good, HSG A |
| | 1.770 | 37 | Weighted Average |
| | 1.680 | | 94.92% Pervious Area |
| | 0.090 | | 5.08% Impervious Area |

| Tc (min) | Length (feet) | Slope (ft/ft) | Velocity (ft/sec) | Capacity (cfs) | Description |
|---|---|---|---|---|---|
| 25.0 | | | | | **Direct Entry,** |

## Summary for Subcatchment 2S: PROP TO INFILTRATION BASIN

Runoff = 0.35 cfs @ 12.30 hrs, Volume= 0.033 af, Depth= 0.55"
Routed to Pond 9P : PROPOSED INFILTRATION BASIN

Runoff by SCS TR-20 method, UH=SCS, Weighted-CN, Time Span= 0.00-48.00 hrs, dt= 0.05 hrs
MSE 24-hr 3 10-Year Rainfall=4.16"

| | Area (ac) | CN | Description |
|---|---|---|---|
| * | 0.190 | 98 | IMPERVIOUS |
| | 0.010 | 30 | Woods, Good, HSG A |
| | 0.530 | 39 | >75% Grass cover, Good, HSG A |
| | 0.730 | 54 | Weighted Average |
| | 0.540 | | 73.97% Pervious Area |
| | 0.190 | | 26.03% Impervious Area |

| Tc (min) | Length (feet) | Slope (ft/ft) | Velocity (ft/sec) | Capacity (cfs) | Description |
|---|---|---|---|---|---|
| 15.0 | | | | | **Direct Entry,** |

## Summary for Subcatchment 6S: EXIST BYPASS TO SOUTH SWALE

Runoff = 0.78 cfs @ 12.54 hrs, Volume= 0.129 af, Depth= 0.35"
Routed to Reach 7R : EXIST TO SWALE AND SOUTH

Runoff by SCS TR-20 method, UH=SCS, Weighted-CN, Time Span= 0.00-48.00 hrs, dt= 0.05 hrs
MSE 24-hr 3 10-Year Rainfall=4.16"

| | Area (ac) | CN | Description |
|---|---|---|---|
| * | 1.030 | 98 | IMPERVIOUS |
| | 1.740 | 30 | Woods, Good, HSG A |
| | 1.700 | 39 | >75% Grass cover, Good, HSG A |
| | 4.470 | 49 | Weighted Average |
| | 3.440 | | 76.96% Pervious Area |
| | 1.030 | | 23.04% Impervious Area |

| Tc (min) | Length (feet) | Slope (ft/ft) | Velocity (ft/sec) | Capacity (cfs) | Description |
|---|---|---|---|---|---|
| 25.0 | | | | | **Direct Entry,** |

## Summary for Subcatchment 9S: PROP BYPASS TO SOUTH AND SWALE

Runoff = 0.75 cfs @ 12.54 hrs, Volume= 0.124 af, Depth= 0.35"
Routed to Reach 10R : PROP TO SWALE AND SOUTH

Runoff by SCS TR-20 method, UH=SCS, Weighted-CN, Time Span= 0.00-48.00 hrs, dt= 0.05 hrs
MSE 24-hr 3 10-Year Rainfall=4.16"

| | Area (ac) | CN | Description |
|---|---|---|---|
| * | 0.980 | 98 | IMPERVIOUS |
| | 1.690 | 30 | Woods, Good, HSG A |
| | 1.640 | 39 | >75% Grass cover, Good, HSG A |
| | 4.310 | 49 | Weighted Average |
| | 3.330 | | 77.26% Pervious Area |
| | 0.980 | | 22.74% Impervious Area |

| Tc (min) | Length (feet) | Slope (ft/ft) | Velocity (ft/sec) | Capacity (cfs) | Description |
|---|---|---|---|---|---|
| 25.0 | | | | | **Direct Entry,** |

## Summary for Subcatchment 10S: PROP TO LOW SPOT

Runoff = 0.00 cfs @ 19.52 hrs, Volume= 0.001 af, Depth= 0.01"
Routed to Pond 8P : EXIST LOW SPOT (PROPOSED CONDITIONS)

Runoff by SCS TR-20 method, UH=SCS, Weighted-CN, Time Span= 0.00-48.00 hrs, dt= 0.05 hrs
MSE 24-hr 3 10-Year Rainfall=4.16"

| | Area (ac) | CN | Description |
|---|---|---|---|
| * | 0.050 | 98 | IMPERVIOUS |
| | 0.810 | 30 | Woods, Good, HSG A |
| | 0.340 | 39 | >75% Grass cover, Good, HSG A |
| | 1.200 | 35 | Weighted Average |
| | 1.150 | | 95.83% Pervious Area |
| | 0.050 | | 4.17% Impervious Area |

| Tc (min) | Length (feet) | Slope (ft/ft) | Velocity (ft/sec) | Capacity (cfs) | Description |
|---|---|---|---|---|---|
| 20.0 | | | | | **Direct Entry,** |

## Summary for Reach 7R: EXIST TO SWALE AND SOUTH

Inflow Area = 6.240 ac, 17.95% Impervious, Inflow Depth = 0.25" for 10-Year event
Inflow = 0.78 cfs @ 12.54 hrs, Volume= 0.129 af
Outflow = 0.78 cfs @ 12.54 hrs, Volume= 0.129 af, Atten= 0%, Lag= 0.0 min

Routing by Stor-Ind+Trans method, Time Span= 0.00-48.00 hrs, dt= 0.05 hrs

## Summary for Reach 10R: PROP TO SWALE AND SOUTH

Inflow Area = 6.240 ac, 19.55% Impervious, Inflow Depth = 0.24" for 10-Year event
Inflow = 0.75 cfs @ 12.54 hrs, Volume= 0.124 af
Outflow = 0.75 cfs @ 12.54 hrs, Volume= 0.124 af, Atten= 0%, Lag= 0.0 min

Routing by Stor-Ind+Trans method, Time Span= 0.00-48.00 hrs, dt= 0.05 hrs

## Summary for Pond 5P: EXISTING LOW SPOT

Inflow Area = 1.770 ac, 5.08% Impervious, Inflow Depth = 0.03" for 10-Year event
Inflow = 0.01 cfs @ 15.13 hrs, Volume= 0.005 af
Outflow = 0.01 cfs @ 18.85 hrs, Volume= 0.005 af, Atten= 21%, Lag= 223.0 min
Discarded = 0.01 cfs @ 18.85 hrs, Volume= 0.005 af
Primary = 0.00 cfs @ 0.00 hrs, Volume= 0.000 af
Routed to Reach 7R : EXIST TO SWALE AND SOUTH

Routing by Stor-Ind method, Time Span= 0.00-48.00 hrs, dt= 0.05 hrs
Peak Elev= 875.15' @ 18.85 hrs Surf.Area= 344 sf Storage= 22 cf

Plug-Flow detention time= 51.7 min calculated for 0.005 af (100% of inflow)
Center-of-Mass det. time= 51.6 min ( 1,152.5 - 1,100.8 )

| Volume | Invert | Avail.Storage | Storage Description |
|---|---|---|---|
| #1 | 875.00' | 3,574 cf | **Custom Stage Data (Irregular)** Listed below (Recalc) |

| Elevation (feet) | Surf.Area (sq-ft) | Perim. (feet) | Inc.Store (cubic-feet) | Cum.Store (cubic-feet) | Wet.Area (sq-ft) |
|---|---|---|---|---|---|
| 875.00 | 15 | 15.0 | 0 | 0 | 15 |
| 875.25 | 785 | 125.0 | 76 | 76 | 1,241 |
| 875.50 | 2,790 | 230.0 | 421 | 497 | 4,207 |
| 875.75 | 6,055 | 305.0 | 1,080 | 1,577 | 7,401 |
| 876.00 | 10,095 | 410.0 | 1,997 | 3,574 | 13,376 |

| Device | Routing | Invert | Outlet Devices |
|---|---|---|---|
| #1 | Primary | 875.65' | **Asymmetrical Weir, C= 3.27**<br>Offset (feet) 0.00 10.00 40.00 48.00<br>Height (feet) 0.35 0.05 0.00 0.35 |
| #2 | Discarded | 875.00' | **0.800 in/hr Exfiltration over Surface area** |

**Discarded OutFlow** Max=0.01 cfs @ 18.85 hrs HW=875.15' (Free Discharge)
↑—**2=Exfiltration** (Exfiltration Controls 0.01 cfs)

**Primary OutFlow** Max=0.00 cfs @ 0.00 hrs HW=875.00' (Free Discharge)
↑—**1=Asymmetrical Weir** ( Controls 0.00 cfs)

## Summary for Pond 8P: EXIST LOW SPOT (PROPOSED CONDITIONS)

Inflow Area = 1.930 ac, 12.44% Impervious, Inflow Depth = 0.01" for 10-Year event
Inflow = 0.00 cfs @ 19.52 hrs, Volume= 0.001 af
Outflow = 0.00 cfs @ 20.28 hrs, Volume= 0.001 af, Atten= 2%, Lag= 46.0 min
Discarded = 0.00 cfs @ 20.28 hrs, Volume= 0.001 af
Primary = 0.00 cfs @ 0.00 hrs, Volume= 0.000 af
Routed to Reach 10R : PROP TO SWALE AND SOUTH

Routing by Stor-Ind method, Time Span= 0.00-48.00 hrs, dt= 0.05 hrs
Peak Elev= 875.06' @ 20.28 hrs Surf.Area= 100 sf Storage= 3 cf

Plug-Flow detention time= 25.4 min calculated for 0.001 af (100% of inflow)
Center-of-Mass det. time= 25.4 min ( 1,216.1 - 1,190.7 )

| Volume | Invert | Avail.Storage | Storage Description |
|---|---|---|---|
| #1 | 875.00' | 3,574 cf | **Custom Stage Data (Irregular)** Listed below (Recalc) |

| Elevation (feet) | Surf.Area (sq-ft) | Perim. (feet) | Inc.Store (cubic-feet) | Cum.Store (cubic-feet) | Wet.Area (sq-ft) |
|---|---|---|---|---|---|
| 875.00 | 15 | 15.0 | 0 | 0 | 15 |
| 875.25 | 785 | 125.0 | 76 | 76 | 1,241 |
| 875.50 | 2,790 | 230.0 | 421 | 497 | 4,207 |
| 875.75 | 6,055 | 305.0 | 1,080 | 1,577 | 7,401 |
| 876.00 | 10,095 | 410.0 | 1,997 | 3,574 | 13,376 |

| Device | Routing | Invert | Outlet Devices |
|---|---|---|---|
| #1 | Primary | 875.65' | **Asymmetrical Weir, C= 3.27**<br>Offset (feet) 0.00 10.00 40.00 48.00<br>Height (feet) 0.35 0.05 0.00 0.35 |
| #2 | Discarded | 875.00' | **0.800 in/hr Exfiltration over Surface area** |

**Discarded OutFlow** Max=0.00 cfs @ 20.28 hrs HW=875.06' (Free Discharge)
↑—**2=Exfiltration** (Exfiltration Controls 0.00 cfs)

**Primary OutFlow** Max=0.00 cfs @ 0.00 hrs HW=875.00' (Free Discharge)
↑—**1=Asymmetrical Weir** ( Controls 0.00 cfs)

## Summary for Pond 9P: PROPOSED INFILTRATION BASIN

Inflow Area = 0.730 ac, 26.03% Impervious, Inflow Depth = 0.55" for 10-Year event
Inflow = 0.35 cfs @ 12.30 hrs, Volume= 0.033 af
Outflow = 0.02 cfs @ 17.65 hrs, Volume= 0.033 af, Atten= 95%, Lag= 321.5 min
Discarded = 0.02 cfs @ 17.65 hrs, Volume= 0.033 af
Primary = 0.00 cfs @ 0.00 hrs, Volume= 0.000 af
Routed to Pond 8P : EXIST LOW SPOT (PROPOSED CONDITIONS)

Routing by Stor-Ind method, Time Span= 0.00-48.00 hrs, dt= 0.05 hrs
Peak Elev= 878.36' @ 17.65 hrs Surf.Area= 950 sf Storage= 880 cf

Plug-Flow detention time= 626.8 min calculated for 0.033 af (100% of inflow)
Center-of-Mass det. time= 627.3 min ( 1,507.0 - 879.6 )

| Volume | Invert | Avail.Storage | Storage Description |
|---|---|---|---|
| #1 | 877.00' | 3,182 cf | **Custom Stage Data (Irregular)** Listed below (Recalc) |

| Elevation (feet) | Surf.Area (sq-ft) | Perim. (feet) | Inc.Store (cubic-feet) | Cum.Store (cubic-feet) | Wet.Area (sq-ft) |
|---|---|---|---|---|---|
| 877.00 | 375 | 100.0 | 0 | 0 | 375 |
| 878.00 | 785 | 140.0 | 568 | 568 | 1,148 |
| 879.00 | 1,280 | 165.0 | 1,022 | 1,590 | 1,774 |
| 880.00 | 1,925 | 230.0 | 1,592 | 3,182 | 3,827 |

| Device | Routing | Invert | Outlet Devices |
|---|---|---|---|
| #1 | Primary | 878.50' | **Custom Weir/Orifice, Cv= 2.62 (C= 3.28)**<br>Head (feet) 0.00 1.50<br>Width (feet) 4.00 13.00 |
| #2 | Discarded | 877.00' | **0.800 in/hr Exfiltration over Surface area** |

**Discarded OutFlow** Max=0.02 cfs @ 17.65 hrs HW=878.36' (Free Discharge)
↑—**2=Exfiltration** (Exfiltration Controls 0.02 cfs)

**Primary OutFlow** Max=0.00 cfs @ 0.00 hrs HW=877.00' (Free Discharge)
↑—**1=Custom Weir/Orifice** ( Controls 0.00 cfs)

Time span=0.00-48.00 hrs, dt=0.05 hrs, 961 points
Runoff by SCS TR-20 method, UH=SCS, Weighted-CN
Reach routing by Stor-Ind+Trans method - Pond routing by Stor-Ind method

**Subcatchment 1S: EXIST TO LOW SPOT** Runoff Area=1.770 ac 5.08% Impervious Runoff Depth=0.69"
Tc=25.0 min CN=37 Runoff=0.68 cfs 0.102 af

**Subcatchment 2S: PROP TO** Runoff Area=0.730 ac 26.03% Impervious Runoff Depth=2.16"
Tc=15.0 min CN=54 Runoff=1.93 cfs 0.131 af

**Subcatchment 6S: EXIST BYPASS TO** Runoff Area=4.470 ac 23.04% Impervious Runoff Depth=1.69"
Tc=25.0 min CN=49 Runoff=6.56 cfs 0.629 af

**Subcatchment 9S: PROP BYPASS TO** Runoff Area=4.310 ac 22.74% Impervious Runoff Depth=1.69"
Tc=25.0 min CN=49 Runoff=6.33 cfs 0.606 af

**Subcatchment 10S: PROP TO LOW SPOT** Runoff Area=1.200 ac 4.17% Impervious Runoff Depth=0.55"
Tc=20.0 min CN=35 Runoff=0.34 cfs 0.055 af

**Reach 7R: EXIST TO SWALE AND SOUTH** Inflow=6.56 cfs 0.650 af
Outflow=6.56 cfs 0.650 af

**Reach 10R: PROP TO SWALE AND SOUTH** Inflow=6.37 cfs 0.668 af
Outflow=6.37 cfs 0.668 af

**Pond 5P: EXISTING LOW SPOT** Peak Elev=875.69' Storage=1,232 cf Inflow=0.68 cfs 0.102 af
Discarded=0.10 cfs 0.081 af Primary=0.24 cfs 0.021 af Outflow=0.33 cfs 0.102 af

**Pond 8P: EXIST LOW SPOT (PROPOSED** Peak Elev=875.72' Storage=1,398 cf Inflow=1.92 cfs 0.144 af
Discarded=0.10 cfs 0.082 af Primary=0.99 cfs 0.062 af Outflow=1.10 cfs 0.144 af

**Pond 9P: PROPOSED INFILTRATION** Peak Elev=878.73' Storage=1,264 cf Inflow=1.93 cfs 0.131 af
Discarded=0.02 cfs 0.042 af Primary=1.64 cfs 0.089 af Outflow=1.66 cfs 0.131 af

## Summary for Subcatchment 1S: EXIST TO LOW SPOT

Runoff = 0.68 cfs @ 12.51 hrs, Volume= 0.102 af, Depth= 0.69"
Routed to Pond 5P : EXISTING LOW SPOT

Runoff by SCS TR-20 method, UH=SCS, Weighted-CN, Time Span= 0.00-48.00 hrs, dt= 0.05 hrs
MSE 24-hr 3 100-Year Rainfall=7.20"

| | Area (ac) | CN | Description |
|---|---|---|---|
| | 1.000 | 30 | Woods, Good, HSG A |
| * | 0.090 | 98 | IMPERVIOUS |
| | 0.680 | 39 | >75% Grass cover, Good, HSG A |
| | 1.770 | 37 | Weighted Average |
| | 1.680 | | 94.92% Pervious Area |
| | 0.090 | | 5.08% Impervious Area |

| Tc (min) | Length (feet) | Slope (ft/ft) | Velocity (ft/sec) | Capacity (cfs) | Description |
|---|---|---|---|---|---|
| 25.0 | | | | | **Direct Entry,** |

## Summary for Subcatchment 2S: PROP TO INFILTRATION BASIN

Runoff = 1.93 cfs @ 12.25 hrs, Volume= 0.131 af, Depth= 2.16"
Routed to Pond 9P : PROPOSED INFILTRATION BASIN

Runoff by SCS TR-20 method, UH=SCS, Weighted-CN, Time Span= 0.00-48.00 hrs, dt= 0.05 hrs
MSE 24-hr 3 100-Year Rainfall=7.20"

| | Area (ac) | CN | Description |
|---|---|---|---|
| * | 0.190 | 98 | IMPERVIOUS |
| | 0.010 | 30 | Woods, Good, HSG A |
| | 0.530 | 39 | >75% Grass cover, Good, HSG A |
| | 0.730 | 54 | Weighted Average |
| | 0.540 | | 73.97% Pervious Area |
| | 0.190 | | 26.03% Impervious Area |

| Tc (min) | Length (feet) | Slope (ft/ft) | Velocity (ft/sec) | Capacity (cfs) | Description |
|---|---|---|---|---|---|
| 15.0 | | | | | **Direct Entry,** |

## Summary for Subcatchment 6S: EXIST BYPASS TO SOUTH SWALE

Runoff = 6.56 cfs @ 12.41 hrs, Volume= 0.629 af, Depth= 1.69"
Routed to Reach 7R : EXIST TO SWALE AND SOUTH

Runoff by SCS TR-20 method, UH=SCS, Weighted-CN, Time Span= 0.00-48.00 hrs, dt= 0.05 hrs
MSE 24-hr 3 100-Year Rainfall=7.20"

| | Area (ac) | CN | Description |
|---|---|---|---|
| * | 1.030 | 98 | IMPERVIOUS |
| | 1.740 | 30 | Woods, Good, HSG A |
| | 1.700 | 39 | >75% Grass cover, Good, HSG A |
| | 4.470 | 49 | Weighted Average |
| | 3.440 | | 76.96% Pervious Area |
| | 1.030 | | 23.04% Impervious Area |

| Tc (min) | Length (feet) | Slope (ft/ft) | Velocity (ft/sec) | Capacity (cfs) | Description |
|---|---|---|---|---|---|
| 25.0 | | | | | **Direct Entry,** |

## Summary for Subcatchment 9S: PROP BYPASS TO SOUTH AND SWALE

Runoff = 6.33 cfs @ 12.41 hrs, Volume= 0.606 af, Depth= 1.69"
Routed to Reach 10R : PROP TO SWALE AND SOUTH

Runoff by SCS TR-20 method, UH=SCS, Weighted-CN, Time Span= 0.00-48.00 hrs, dt= 0.05 hrs
MSE 24-hr 3 100-Year Rainfall=7.20"

| | Area (ac) | CN | Description |
|---|---|---|---|
| * | 0.980 | 98 | IMPERVIOUS |
| | 1.690 | 30 | Woods, Good, HSG A |
| | 1.640 | 39 | >75% Grass cover, Good, HSG A |
| | 4.310 | 49 | Weighted Average |
| | 3.330 | | 77.26% Pervious Area |
| | 0.980 | | 22.74% Impervious Area |

| Tc (min) | Length (feet) | Slope (ft/ft) | Velocity (ft/sec) | Capacity (cfs) | Description |
|---|---|---|---|---|---|
| 25.0 | | | | | **Direct Entry,** |

## Summary for Subcatchment 10S: PROP TO LOW SPOT

Runoff = 0.34 cfs @ 12.47 hrs, Volume= 0.055 af, Depth= 0.55"
Routed to Pond 8P : EXIST LOW SPOT (PROPOSED CONDITIONS)

Runoff by SCS TR-20 method, UH=SCS, Weighted-CN, Time Span= 0.00-48.00 hrs, dt= 0.05 hrs
MSE 24-hr 3 100-Year Rainfall=7.20"

| | Area (ac) | CN | Description |
|---|---|---|---|
| * | 0.050 | 98 | IMPERVIOUS |
| | 0.810 | 30 | Woods, Good, HSG A |
| | 0.340 | 39 | >75% Grass cover, Good, HSG A |
| | 1.200 | 35 | Weighted Average |
| | 1.150 | | 95.83% Pervious Area |
| | 0.050 | | 4.17% Impervious Area |

| Tc (min) | Length (feet) | Slope (ft/ft) | Velocity (ft/sec) | Capacity (cfs) | Description |
|---|---|---|---|---|---|
| 20.0 | | | | | **Direct Entry,** |

## Summary for Reach 7R: EXIST TO SWALE AND SOUTH

Inflow Area = 6.240 ac, 17.95% Impervious, Inflow Depth = 1.25" for 100-Year event
Inflow = 6.56 cfs @ 12.41 hrs, Volume= 0.650 af
Outflow = 6.56 cfs @ 12.41 hrs, Volume= 0.650 af, Atten= 0%, Lag= 0.0 min

Routing by Stor-Ind+Trans method, Time Span= 0.00-48.00 hrs, dt= 0.05 hrs

## Summary for Reach 10R: PROP TO SWALE AND SOUTH

Inflow Area = 6.240 ac, 19.55% Impervious, Inflow Depth = 1.28" for 100-Year event
Inflow = 6.37 cfs @ 12.50 hrs, Volume= 0.668 af
Outflow = 6.37 cfs @ 12.50 hrs, Volume= 0.668 af, Atten= 0%, Lag= 0.0 min

Routing by Stor-Ind+Trans method, Time Span= 0.00-48.00 hrs, dt= 0.05 hrs

## Summary for Pond 5P: EXISTING LOW SPOT

Inflow Area = 1.770 ac, 5.08% Impervious, Inflow Depth = 0.69" for 100-Year event
Inflow = 0.68 cfs @ 12.51 hrs, Volume= 0.102 af
Outflow = 0.33 cfs @ 13.12 hrs, Volume= 0.102 af, Atten= 51%, Lag= 36.7 min
Discarded = 0.10 cfs @ 13.12 hrs, Volume= 0.081 af
Primary = 0.24 cfs @ 13.12 hrs, Volume= 0.021 af
Routed to Reach 7R : EXIST TO SWALE AND SOUTH

Routing by Stor-Ind method, Time Span= 0.00-48.00 hrs, dt= 0.05 hrs
Peak Elev= 875.69' @ 13.12 hrs Surf.Area= 5,133 sf Storage= 1,232 cf

Plug-Flow detention time= 145.7 min calculated for 0.102 af (100% of inflow)
Center-of-Mass det. time= 145.9 min ( 1,052.4 - 906.5 )

| Volume | Invert | Avail.Storage | Storage Description |
|---|---|---|---|
| #1 | 875.00' | 3,574 cf | **Custom Stage Data (Irregular)** Listed below (Recalc) |

| Elevation (feet) | Surf.Area (sq-ft) | Perim. (feet) | Inc.Store (cubic-feet) | Cum.Store (cubic-feet) | Wet.Area (sq-ft) |
|---|---|---|---|---|---|
| 875.00 | 15 | 15.0 | 0 | 0 | 15 |
| 875.25 | 785 | 125.0 | 76 | 76 | 1,241 |
| 875.50 | 2,790 | 230.0 | 421 | 497 | 4,207 |
| 875.75 | 6,055 | 305.0 | 1,080 | 1,577 | 7,401 |
| 876.00 | 10,095 | 410.0 | 1,997 | 3,574 | 13,376 |

| Device | Routing | Invert | Outlet Devices |
|---|---|---|---|
| #1 | Primary | 875.65' | **Asymmetrical Weir, C= 3.27**<br>Offset (feet) 0.00 10.00 40.00 48.00<br>Height (feet) 0.35 0.05 0.00 0.35 |
| #2 | Discarded | 875.00' | **0.800 in/hr Exfiltration over Surface area** |

**Discarded OutFlow** Max=0.10 cfs @ 13.12 hrs HW=875.69' (Free Discharge)
↑—**2=Exfiltration** (Exfiltration Controls 0.10 cfs)

**Primary OutFlow** Max=0.23 cfs @ 13.12 hrs HW=875.69' (Free Discharge)
↑—**1=Asymmetrical Weir** (Weir Controls 0.23 cfs @ 0.26 fps)

## Summary for Pond 8P: EXIST LOW SPOT (PROPOSED CONDITIONS)

Inflow Area = 1.930 ac, 12.44% Impervious, Inflow Depth = 0.90" for 100-Year event
Inflow = 1.92 cfs @ 12.35 hrs, Volume= 0.144 af
Outflow = 1.10 cfs @ 12.59 hrs, Volume= 0.144 af, Atten= 43%, Lag= 14.7 min
Discarded = 0.10 cfs @ 12.59 hrs, Volume= 0.082 af
Primary = 0.99 cfs @ 12.59 hrs, Volume= 0.062 af
Routed to Reach 10R : PROP TO SWALE AND SOUTH

Routing by Stor-Ind method, Time Span= 0.00-48.00 hrs, dt= 0.05 hrs
Peak Elev= 875.72' @ 12.59 hrs Surf.Area= 5,586 sf Storage= 1,398 cf

Plug-Flow detention time= 107.3 min calculated for 0.144 af (100% of inflow)
Center-of-Mass det. time= 107.5 min ( 967.7 - 860.2 )

| Volume | Invert | Avail.Storage | Storage Description |
|---|---|---|---|
| #1 | 875.00' | 3,574 cf | **Custom Stage Data (Irregular)**Listed below (Recalc) |

| Elevation (feet) | Surf.Area (sq-ft) | Perim. (feet) | Inc.Store (cubic-feet) | Cum.Store (cubic-feet) | Wet.Area (sq-ft) |
|---|---|---|---|---|---|
| 875.00 | 15 | 15.0 | 0 | 0 | 15 |
| 875.25 | 785 | 125.0 | 76 | 76 | 1,241 |
| 875.50 | 2,790 | 230.0 | 421 | 497 | 4,207 |
| 875.75 | 6,055 | 305.0 | 1,080 | 1,577 | 7,401 |
| 876.00 | 10,095 | 410.0 | 1,997 | 3,574 | 13,376 |

| Device | Routing | Invert | Outlet Devices |
|---|---|---|---|
| #1 | Primary | 875.65' | **Asymmetrical Weir, C= 3.27**<br>Offset (feet) 0.00 10.00 40.00 48.00<br>Height (feet) 0.35 0.05 0.00 0.35 |
| #2 | Discarded | 875.00' | **0.800 in/hr Exfiltration over Surface area** |

**Discarded OutFlow** Max=0.10 cfs @ 12.59 hrs HW=875.72' (Free Discharge)
**2=Exfiltration** (Exfiltration Controls 0.10 cfs)

**Primary OutFlow** Max=0.98 cfs @ 12.59 hrs HW=875.72' (Free Discharge)
**1=Asymmetrical Weir** (Weir Controls 0.98 cfs @ 0.45 fps)

## Summary for Pond 9P: PROPOSED INFILTRATION BASIN

Inflow Area = 0.730 ac, 26.03% Impervious, Inflow Depth = 2.16" for 100-Year event
Inflow = 1.93 cfs @ 12.25 hrs, Volume= 0.131 af
Outflow = 1.66 cfs @ 12.34 hrs, Volume= 0.131 af, Atten= 14%, Lag= 5.2 min
Discarded = 0.02 cfs @ 12.34 hrs, Volume= 0.042 af
Primary = 1.64 cfs @ 12.34 hrs, Volume= 0.089 af
Routed to Pond 8P : EXIST LOW SPOT (PROPOSED CONDITIONS)

Routing by Stor-Ind method, Time Span= 0.00-48.00 hrs, dt= 0.05 hrs
Peak Elev= 878.73' @ 12.34 hrs Surf.Area= 1,134 sf Storage= 1,264 cf

Plug-Flow detention time= 227.7 min calculated for 0.131 af (100% of inflow)
Center-of-Mass det. time= 228.9 min ( 1,069.2 - 840.3 )

| Volume | Invert | Avail.Storage | Storage Description |
|---|---|---|---|
| #1 | 877.00' | 3,182 cf | **Custom Stage Data (Irregular)** Listed below (Recalc) |

| Elevation (feet) | Surf.Area (sq-ft) | Perim. (feet) | Inc.Store (cubic-feet) | Cum.Store (cubic-feet) | Wet.Area (sq-ft) |
|---|---|---|---|---|---|
| 877.00 | 375 | 100.0 | 0 | 0 | 375 |
| 878.00 | 785 | 140.0 | 568 | 568 | 1,148 |
| 879.00 | 1,280 | 165.0 | 1,022 | 1,590 | 1,774 |
| 880.00 | 1,925 | 230.0 | 1,592 | 3,182 | 3,827 |

| Device | Routing | Invert | Outlet Devices |
|---|---|---|---|
| #1 | Primary | 878.50' | **Custom Weir/Orifice, Cv= 2.62 (C= 3.28)**<br>Head (feet) 0.00 1.50<br>Width (feet) 4.00 13.00 |
| #2 | Discarded | 877.00' | **0.800 in/hr Exfiltration over Surface area** |

**Discarded OutFlow** Max=0.02 cfs @ 12.34 hrs HW=878.73' (Free Discharge)
↑—**2=Exfiltration** (Exfiltration Controls 0.02 cfs)

**Primary OutFlow** Max=1.61 cfs @ 12.34 hrs HW=878.73' (Free Discharge)
↑—**1=Custom Weir/Orifice** (Weir Controls 1.61 cfs @ 1.52 fps)

# EXISTING DRAINAGE AREA PLAN
SCALE: 1" = 70'

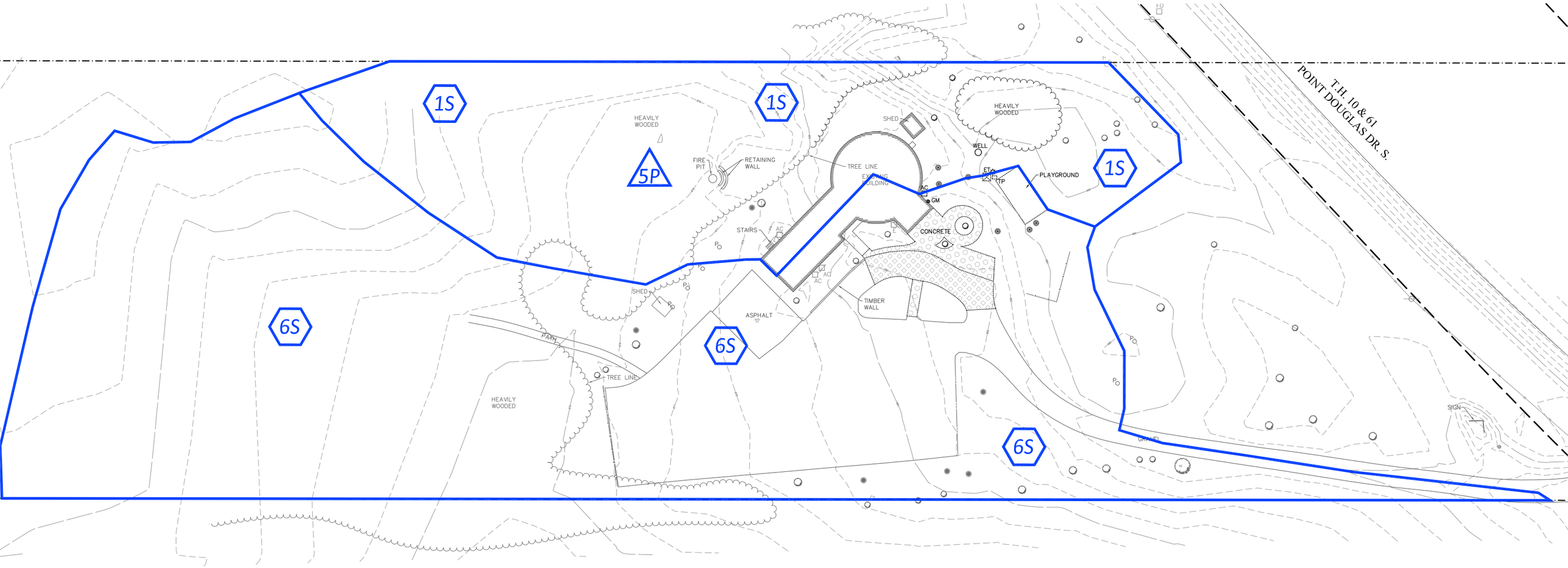

# PROPOSED DRAINAGE AREA PLAN
SCALE: 1" = 70'

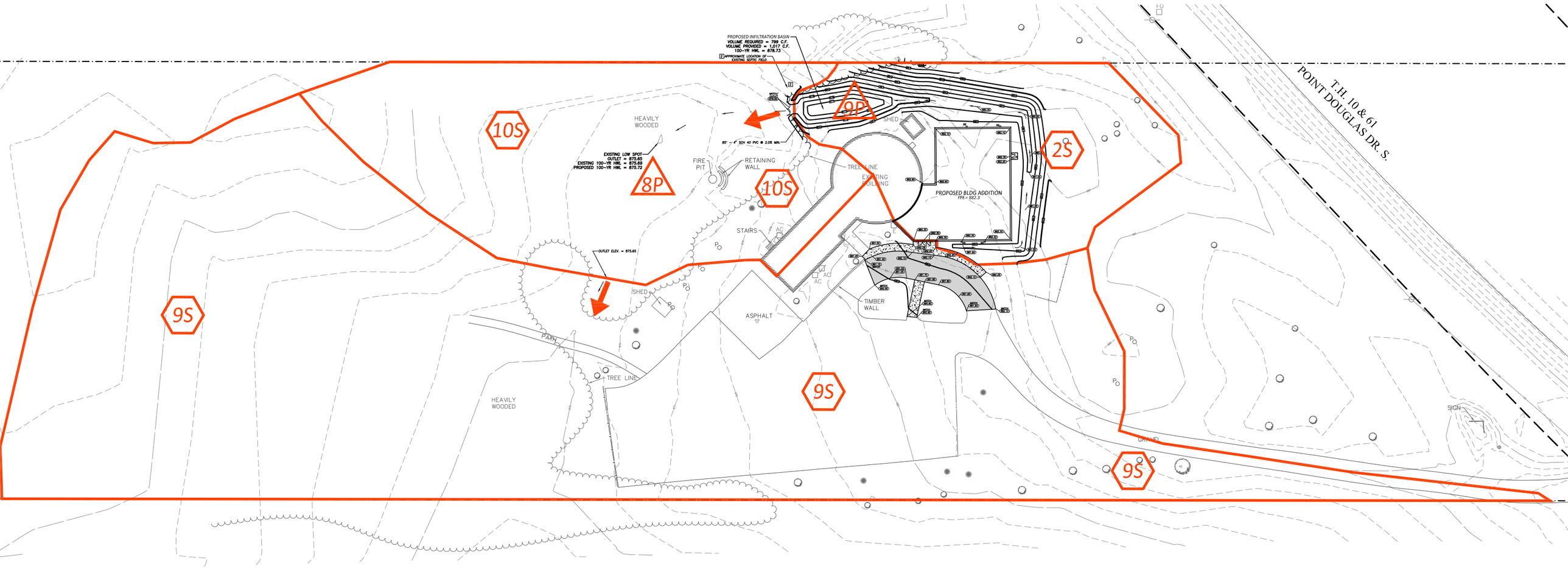

INDEPENDENT TESTING TECHNOLOGIES
337 31st Avenue South • Waite Park, MN 56387 • (320) 253-4338 • www.independenttestingtech.com

**AUGUST 14, 2023**

# PROJECT 23-235
# REPORT OF GEOTECHNICAL EXPLORATIONS

**For**

## NEW LIFE EVANGELICAL FREE CHURCH
## BUILDING ADDITION
## HASTINGS, MINNESOTA

**Prepared For:**

## VANMAN ARCHITECTS & BUILDERS

INDEPENDENT TESTING TECHNOLOGIES
337 31st Avenue South • Waite Park, MN 56387 • (320) 253-4338 • www.independenttestingtech.com

August 14, 2023

Ms. Holly Burley
Vanman Architects & Builders
6701 West 23rd Street
Minneapolis, MN 55426

RE: 23-235 Report of Geotechnical Exploration
New Life Evangelical Free Church
Hastings, Minnesota

Dear Ms. Burley:

Independent Testing Technologies, Inc. is pleased to submit the results of our subsurface investigation program for this project in Hastings, Minnesota. This report represents our work on this project as authorized by you. An electronic copy is enclosed.

The soils on this site are well suited for the proposed building and site improvements. The soils encountered were fine grained, poorly graded sand (SP, SP-SM) overlying deep silty sand (SM) and clayey sand (SC-SM) glacial till. Groundwater was not observed to the depths explored in any of the borings at the time of drilling. Soil samples obtained during our investigation will be stored at our office for thirty days after the date of this report. After that time, they will be disposed of unless you advise otherwise.

Ms. Burley, it has been our pleasure to work with you on this project. Independent Testing appreciated the opportunity to perform this geotechnical evaluation and look forward to continuing our participation during the construction phase of this project. Please contact Patrick Johnson if you have any questions regarding this report. Please contact Tyler Burkes if you would like a proposal for the materials testing services that will be needed.

Sincerely,

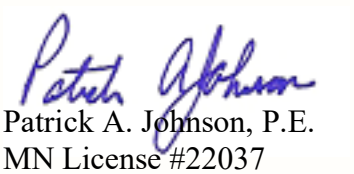

Patrick A. Johnson, P.E.
MN License #22037

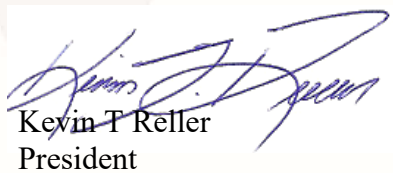

Kevin T Reller
President

## CERTIFICATION

**I hereby certify that this report was prepared by me or under my direct supervision and that I am a duly Licensed Engineer under the laws of the State of Minnesota.**

**Patrick A. Johnson**

**Date: August 14, 2023 License No.: 22037**

# TABLE OF CONTENTS


A. Introduction ..... 1

Purpose ..... 1

Scope of Services ..... 1

General Site Conditions ..... 2

Available Subsurface Information ..... 2

B. Exploration Program ..... 2

Exploration Results ..... 3

Penetration Test Results ..... 3

Water Level Observations ..... 4

C. Engineering Review ..... 4

Discussion ..... 4

D. Recommendations ..... 4

Site Grading ..... 5

Structural Fill ..... 5

Foundations ..... 6

Floor Slab ..... 7

Wall Backfill ..... 7

E. Pavement Recommendations ..... 8

F. Closing ..... 8

Boring Location Plan ..... Appendix 1

Soil Boring Logs ..... Appendix 2

**GEOTECHNICAL EXPLORATIONS**
**VANMAN ARCHITECTS & BUILDERS**
**NEW LIFE EVANGELICAL FREE CHURCH**
**HASTINGS, MINNESOTA**
**PROJECT 23-235**

# A. Introduction

**This report is being prepared for use by our client on this specific project. We intend to present this report and our findings in the same logical manner that led us to arrive at our recommendations. This report is based on some general assumptions regarding the anticipated construction based on experience with similar projects. These assumptions and the entire report should be reviewed immediately upon receipt.**

**Purpose:**

The purpose of our investigation was to evaluate the existing soil and water conditions on this site and provide a report of our findings and recommendations regarding design and construction of the proposed site improvements. The project consists of construction of an addition to the existing church at 11245 Point Douglas Drive South in Hastings. The addition will be a one story, slab-on-grade, masonry block wall structure on standard cast-in-place concrete spread footings. In accordance with your written authorization, we have conducted a subsurface exploration program for the proposed project.

**Scope of Services:**

Our authorized scope of services included the following:

1. To investigate the subsurface soil and water conditions encountered at seven (7) split-spoon soil boring locations. The borings were planned to be twenty (20) feet deep at each location.
2. To provide a report of our findings including the results of our subsurface investigation and recommendations regarding earthwork, fill and compaction, building foundation suitability, soil bearing capacities, estimated settlement, wall backfill, floor slab support, parking lot subgrade preparation and bituminous pavement design.

**General Site Conditions:**

The site is an existing church at 11245 Point Douglas Drive South in Hastings. The site lies between the river and US Highway 10 on the north side of the Mississippi River. The site is a lightly wooded, level lot.

**Available Subsurface Information:**

According to the Geologic Map of Minnesota, Quaternary Geology, prepared by Howard C. Hobbs and Joseph E. Goebel (1982, Minnesota Geological Survey), this site lies within an outwash unit of the St. Croix Moraine Association. It is associated with the Wadena Lobe glaciation of Pleistocene, Late Wisconsinan age. The drift is derived from parent material consisting of igneous and metamorphic rocks of the Canadian Shield.

According to the Soil Survey of Washington County prepared by the Soil Conservation Service, the site lies within the Sparta loamy and sand Dickman sandy loam. These consist of nearly level, excessively drained, sandy, and gravelly loams over coarse sands on outwash plains and stream terraces. The individual soils mapped on this site are sandy and have no limitations for development of small commercial building sites.

# B. Exploration Program

**Seven (7) split-spoon soil borings were conducted on this project. The borings were planned to be advanced to depths of 20 feet using a 3 ¼ inch I.D. hollow stem auger. Samples were obtained every 2 ½ feet for the first 10 feet and every 5 feet thereafter using a 2-inch O.D. split spoon sampler in accordance with the American Society for Testing and Materials (ASTM D1586). Standard penetration values (N-values) were obtained at each sample interval by driving the sampler into the soil using a 140-pound hammer falling 30 inches. After an initial set of 6 inches, the number of blows required to drive the sampler 12 inches is known as the standard penetration resistance or N-value. Where the sampler cannot be driven at least 6 inches by 50 blows of the hammer, the total number of blows as well as the distance driven is reported on the boring logs.**

**Groundwater levels were noted during drilling and immediately after completion. The holes were sealed with a mixture of bentonite grout and auger cuttings. Some settlement of the bore holes may be expected. The borings were conducted with a truck mounted drill rig. The ground surface elevations at each boring are based on an assumed elevation of 100.0 for the floor at the main entrance to the existing building.**

**Exploration Results:**

Borings SB-1 through SB-4 were conducted in the parking lot and encountered 2.0 to 9.0 inches aggregate surfacing. Below the aggregate, boring SB-1 encountered dark silty sand (SM) fill to 2.5 feet, followed by fine grained, poorly graded sand (SP) to 20.0 feet and then silty sand (SM) to termination at 21.5 feet. Below the aggregate, boring SB-2 encountered native, fine grained, poorly graded sand with silt (SP-SM) to 7.5 feet, followed by poorly graded sand (SP) to 20.0 feet and then silty sand (SM) to termination at 21.5 feet. Below the aggregate, boring SB-3 encountered native, fine grained, poorly graded sand (SP) to termination at 21.5 feet. Below the aggregate, boring SB-4 encountered native, fine grained, poorly graded sand (SP) to 15.0 feet, followed by silty sand (SM) to termination at 21.5 feet.

Borings SB-5 through SB-7 were conducted in the open yard areas and encountered silty sand (SM) topsoil at the surface to depths of 7.5 to 19.0 inches. Below the topsoil, boring SB-5 encountered native, fine grained, poorly graded sand (SP) to 2.5 feet, followed by silty sand (SM) to 5.0 feet, poorly graded sand (SP) to 9.5 feet, silty clayey sand (SC-SM) to 15.0 feet, poorly graded sand with silt (SP-SM) to 20.0 feet and poorly graded sand (SP) to termination at 21.5 feet. Below the topsoil, boring SB-6 encountered poorly graded sand with silt (SP-SM) fill to 5.0 feet, followed by native, fine grained, poorly graded sand (SP) to 7.5 feet, silty sand (SM) to 15.0 feet, and then poorly graded sand with silt (SP-SM) to termination at 21.5 feet. Below the topsoil, boring SB-7 encountered native, fine grained, poorly graded sand (SP) to 5.0 feet, followed by poorly graded sand with silt (SP-SM) to 7.5 feet, silty sand (SM) to 10.0 feet, poorly graded sand (SP) to 15.0 feet, clayey sand (SC) to 20.0 feet and then poorly graded sand with silt (SP-SM) to termination at 21.5 feet.

**Penetration Test Results:**

The standard penetration blow counts in the native sand soils (SP, SP-SM, SM, SC) below the topsoil ranged from 2 to more than 50, which are very low to very high, indicating that they are in a very loose to very dense condition. Refusal of the spoon occurred at a couple intervals, especially deeper. Refusal of the auger did not occur in any of the borings. Drilling was moderately difficult.

**Water Level Observations:**

Observations of the subsurface water conditions were made during drilling operations. Groundwater was not encountered in any of the borings at the time of drilling.

The water levels were observed over a short period of time. However, we feel the water levels observed are an accurate representation of the true groundwater conditions on this site due to the high permeability of the native sand soils. It should be noted that fluctuations in the level of the groundwater can occur due to variations in rainfall, temperature, spring thaw and other factors not evident at the time of our investigation.

Mottled soils were observed. Mottled soils are a historical indication of a temporarily or seasonally saturated soil condition. Grey soils were also observed. Grey soils are an indication of a permanently saturated soil condition.

# C. Engineering Review

**Discussion:**

Based on our findings, the site appears to be very well suited for the anticipated building and site improvements. The native, poorly graded sands (SP, SP-SM) and silty sands (SM) are excellent material for building support. The poorly graded sands (SP, SP-SM) are also excellent for pavement support.

We understand the building will be one story, masonry wall structure on standard concrete spread footings. Maximum foundation loads could be expected to be in the range of 5 to 7 kips per linear foot for strip footings and 100 to 150 kips for column pads. Groundwater is not expected to have an impact on construction.

# D. Recommendations

**The following recommendations are based on our understanding of the proposed project. If our understanding of the project is not accurate, or if changes are made to the project scope, please inform us so that our recommendations can be amended, if necessary. We have included recommendations regarding earthwork and construction that may help in cost estimates and aid in design. We should be allowed to review the proposed construction plans to provide further detailed recommendations, if necessary. Without the opportunity to review the final construction plans, the recommendations made in this report may no longer be valid.**

**Site Grading:**

We recommend the topsoil be stripped from the entire building pad and parking lot areas prior to beginning construction. The topsoil should be removed from the site or stockpiled for re-use as landscape material. We estimate this will require an excavation of 7.5 to 19 inches. We recommend the pavement and aggregate be removed from the proposed building area also.

We recommend the existing fill be removed from the building area. The fill can remain in the parking lot area. We estimate this will require an excavation of 5 feet in the vicinity of boring SB-6. More fill associated with prior construction is likely to be uncovered in the proposed building addition area.

After removal of the topsoil, fill and aggregate, we recommend clean, inorganic, mineral soil be used as fill to bring the building and parking lot areas to grade. The native, on site soils appear suitable for this purpose. We recommend the bottom of the excavation be observed by a soils engineer or a qualified technician to verify that native, competent material has been reached. We recommend the excavation be oversized one foot for every foot of fill required to reach planned grade (1:1 oversizing). Soils can change dramatically over short horizontal distances. Therefore, these depths should be used as a guide. We recommend clean, mineral fill, meeting the requirements of structural fill, be placed, and compacted to bring the building and parking lot areas to grade.

**Structural Fill:**

The on-site soils consisting of poorly graded sands (SP, SP-SM) are considered excellent for use as structural fill. These soils are generally easy to work with and compact with vibratory compaction equipment. They are not susceptible to moisture variations. The silty sand (SM) can be susceptible to moisture variations and may need to be dried if they become wet prior to compaction. They were very dry at the time of our exploration.

No organic soils, roots, stumps, logs, brush, etc. should be used as structural fill below any foundation or pavement section. We recommend that all fill material be free of soft, wet, or

frozen soils, highly expansive soils, rubble, debris, and rocks in excess of 6 inches in diameter. The fill should be as uniform as possible both in composition and moisture content.

We recommend all fill be compacted to the minimum relative density levels shown in the table below:

| Location | Recommended Compaction Level (Percent of Std. Proctor ASTM D698) |
|---|---|
| Below Footings and Foundations, Interior Wall Backfill | 98 % |
| Exterior Wall Backfill | 95% |
| Below Pavements, deeper than 3 feet from finished subgrade | 95% |
| Below Pavements within 3 feet of finished subgrade | 100% |
| Landscape Areas | 90% |

We recommend all fill placed in the building and parking lot areas be compacted in 8-inch loose lifts. All fill should be compacted at a moisture content within plus or minus 3% of the optimum moisture as determined by a standard proctor. We recommend compaction tests be taken on any fill in the building and parking lot areas at a rate of one test per 2 vertical feet per 2,500 square foot area, with a minimum of two tests per fill area.

**Foundations:**

The N-values recorded in the penetration borings indicate that the existing native soils on this site are in a loose to medium dense condition capable of supporting the anticipated structures placed on standard spread footings. All footings should be placed on native sands (SP, SP-SM, SM) or properly compacted structural fill.

We recommend all exterior footings be placed at a minimum depth of 42 inches below the proposed final grade to provide protection from frost damage. Interior footings in heated areas can be placed at any convenient depth as long as they are on firm, native soils, or properly compacted fill. In unheated areas, we recommend the footings be placed 60 inches deep due to increased frost penetration depths in unheated areas.

We recommend any foundations placed on native soils or on properly compacted fill should be proportioned for a maximum net allowable soil bearing pressure of 3000 psf. The recommended bearing pressure is a net value and represents the actual loads that may be transmitted to the soil independent of overburden pressures.

**Floor Slab**

We recommend a minimum of 6 inches of clean, free draining washed sand with less than 5% passing a No. 200 sieve be placed beneath the floor slabs. This will provide a capillary break and a uniform level subgrade for the floor slabs. We recommend floor slabs be designed using a modulus of subgrade reaction of 300 pounds per cubic inch.

We recommend a vapor moisture barrier consisting of a minimum of 6-mil polyethylene sheeting. A vapor barrier should be placed under all concrete floors on ground that are likely to receive an impermeable floor finish or be used for any purpose where the passage of water vapor through the floor is undesirable. Floor coverings such as linoleum, vinyl tile, carpeting, wood, and synthetic surfacing effectively seal the moisture within the slab where it eventually may loosen, buckle, or blister the floor covering.

In order to lessen the moisture post-construction, we recommend using a low water-cement ratio concrete, less than .45. We recommend allowing the slab a 2-month drying period and testing the slab's moisture condition before installing any floor covering.

**Wall Backfill**

We assume the walls will be backfilled with on-site sand materials. We recommend all interior wall backfill be compacted to at least 98% of standard proctor maximum density. Exterior wall backfill should be compacted to at least 95% of standard proctor maximum density. We recommend below grade walls be designed using a coefficient of active pressure ($K_A$) of 0.33, an at-rest coefficient ($K_0$) of 0.50, and a passive coefficient ($K_P$) of 3.0. We recommend below grade walls be designed using the bulk unit weight of 120 pounds per cubic foot.

# E. Pavement Recommendations

The expected subgrade soils consisting of fine grained, poorly graded sands (SP, SP-SM) and fine grained, silty sands (SM) encountered on this site are classified as A-3 soils in accordance with the American Association of State Highway Transportation Officials (AASHTO) classification system. A-3 soils are rated excellent material for use as parking lot subgrade material. Based on our experience with similar soils, we recommend an R-value of 70 be assumed for the anticipated subgrade materials.

Based on an assumed R-value of 70, we recommend the following bituminous pavement section for light duty truck and car parking lots:

| Thickness | Course/Description | G.E. |
|---|---|---|
| 2.0” | Mn Dot 2360 SPWEB240 Bituminous | 4.5” |
| 2.0” | Mn Dot 2360 SPNWB230 Bituminous | 4.5” |
| 6.0” | Mn Dot 3138 Class 5 or 6 Aggregate Base | 6.0” |
| 10.0” | TOTAL | 15.0” |

For concrete pavement, we recommend 5.0 inches of 4500 psi compressive strength concrete placed on 3 inches of aggregate base.

In using the above R-value for bituminous pavement design, it is essential that the subgrade be constructed of uniform soils at a moisture content and density in accordance with Mn Dot specification 2105 and capable of passing a test roll in accordance with Mn Dot specification 2111. The native, undisturbed soils may need preparation (drying and compacting) to pass a proof roll. If the subgrade is not compacted, uniform and capable of passing a test roll, then we recommend the subgrade be scarified and recompacted or subcut and geotextile fabric placed along with select granular material meeting Mn Dot specification 3149. The top of subgrade should be compacted to a minimum of 100% of standard proctor maximum density. The subgrade should be sloped towards the edges to provide drainage.

# F. Closing

Our work was performed for geotechnical purposes only and not to document the presence or

extent of any contamination on the site. We can note that our crew did not detect any obvious contamination by sight or smell during drilling operations. However, human senses are limited in terms of contamination detection and, therefore, the lack of detection through human sensing does not preclude the possibility of the presence of contamination of the site.

This report represents the result of our subsurface investigation and is based on information gathered at specific locations. Subsurface conditions can change a great deal over short horizontal distances. Also, the actual interface between strata will likely be a gradual transition rather than an abrupt change as represented on the boring logs.

Geotechnical engineering is based extensively on opinion. Therefore, the data contained in this report should be used as a guide, and we recommend that construction monitoring be performed by a qualified geotechnical engineer or technician. We recommend ITT be retained to perform construction observation and materials testing on this project due to our familiarity with the soils. Any changes in the subsurface conditions from those found during this geotechnical investigation should be brought to the attention of a soils engineer.

# APPENDIX 1

# BORING LOCATION PLAN

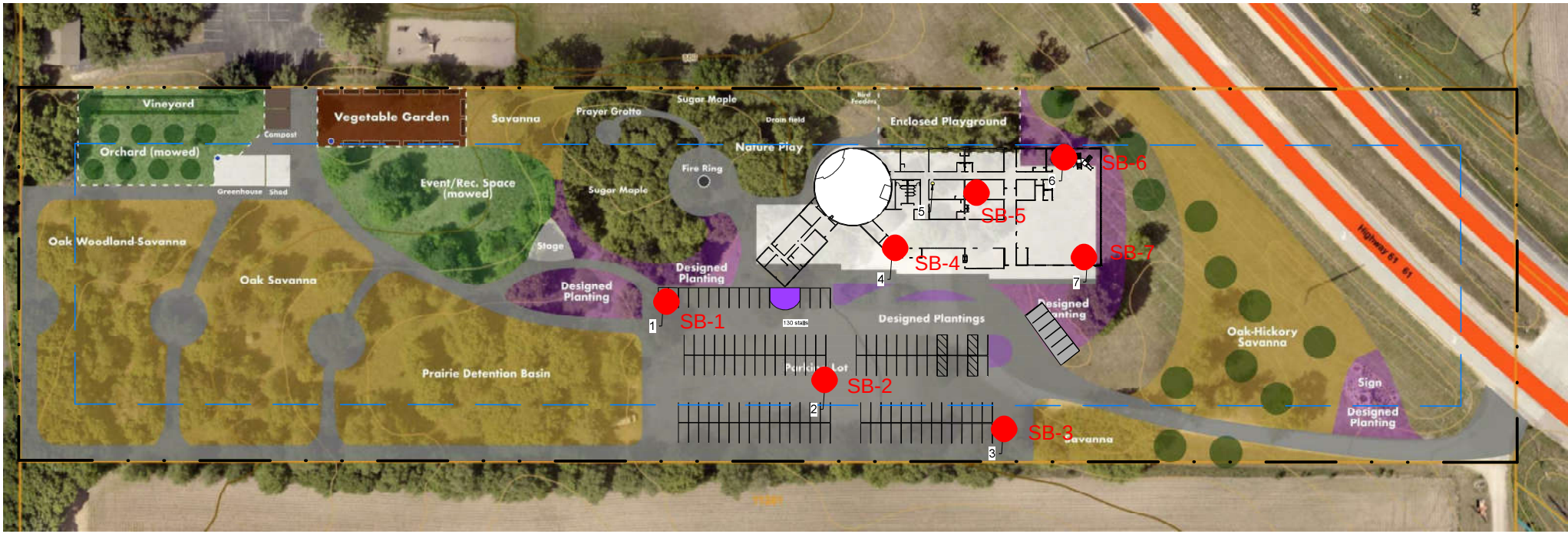


# NEW LIFE EV FREE, HASTINGS MN

5.26.23

SITE

VANMAN
architects and builders

COPYRIGHT © 2022

# APPENDIX 2

# SOIL BORING LOGS

# INDEPENDENT TESTING TECHNOLOGIES, INC. LOG OF SOIL BORING

*PROJECT:* **23-235** **VANMAN ARCHITECTS & BUILDERS**
**NEW LIFE EVANGELICAL FREE CHURCH**
**HASTINGS, MINNESOTA**

*DATE:* **7/27/23** *BORING #:* **SB-1**
*START TIME:* **8:30** *END TIME:* **9:15**
*METHOD:* **3 ¼" I.D. Hollow Stem Auger**
*CREW:* **CD/ SP**
*LOCATION:* **See Boring Location Plan** *ELEVATION:* **94.0** **Page 1 of 1**

| Depth (Feet) | ASTM Symbol | Soil Description | Sample # | N Value | $W_n$ | Notes |
|---|---|---|---|---|---|---|
| 2.0" | | 2.0 inches of Aggregate | | | | |
| | SM | SILTY SAND, fine grained, dark brown. | 1 | 4 | 6.2 | |
| 2.5 | | FILL | | | | |
| | SP | POORLY GRADED SAND, fine grained, brown. | 2 | 3 | 5.8 | |
| 5.0 | | fine to medium grained | 3 | 10 | 8.6 | |
| | | | 4 | 14 | 8.3 | |
| 10.0 | | light brown. | 5 | 15 | 6.7 | |
| 15.0 | | | 6 | 8 | 5.4 | |
| 20.0 | | | | | | |
| | SM | SILTY SAND, fine grained, yellow-brown, mottled. | 7 | 48 | 14.2 | |
| 21.5 | | Boring complete to 21.5 feet.<br>No water encountered during drilling.<br>No water encountered to cave-in at 12' 1" after completion. | | | | |

# INDEPENDENT TESTING TECHNOLOGIES, INC. LOG OF SOIL BORING

*PROJECT:* **23-235** **VANMAN ARCHITECTS & BUILDERS**
**NEW LIFE EVANGELICAL FREE CHURCH**
**HASTINGS, MINNESOTA**

*DATE:* **7/27/23** *BORING #:* **SB-2**
*START TIME:* **9:15** *END TIME:* **10:00**
*METHOD:* **3 ¼" I.D. Hollow Stem Auger**
*CREW:* **CD/ SP**
*LOCATION:* **See Boring Location Plan** *ELEVATION:* **96.3** **Page 1 of 1**

| Depth (Feet) | ASTM Symbol | Soil Description | Sample # | N Value | $W_n$ | Notes |
|---|---|---|---|---|---|---|
| 6.0" | | 6.0 inches of Aggregate | | | | |
| | SP-SM | POORLY GRADED SAND w/ SILT, fine grained, brown. | | | | |
| | | | 1 | 8 | 5.3 | |
| 5.0 | | | | | | |
| | | | 2 | 12 | 5.4 | |
| 7.5 | | | | | | |
| | SP | POORLY GRADED SAND, fine grained, brown. | 3 | 10 | 5.4 | |
| 10.0 | | fine to medium grained | | | | |
| | | | 4 | 8 | 7.0 | |
| 15.0 | | fine grained, w/ GRAVEL | | | | |
| | | | 5 | 50* | 2.7 | * 50 blows for 6 inches |
| 20.0 | | | | | | |
| | SM | SILTY SAND, fine grained, light yellow, mottled. | 6 | 52 | 4.8 | |
| 21.5 | | | | | | |
| | | Boring complete to 21.5 feet.<br>No water encountered during drilling.<br>No water encountered to cave-in at 11' 3" after completion. | | | | |

# INDEPENDENT TESTING TECHNOLOGIES, INC. LOG OF SOIL BORING

*PROJECT:* **23-235** **VANMAN ARCHITECTS & BUILDERS**
**NEW LIFE EVANGELICAL FREE CHURCH**
**HASTINGS, MINNESOTA**

*DATE:* **7/27/23** *BORING #:* **SB-3**
*START TIME:* **10:00** *END TIME:* **10:45**
*METHOD:* **3 ¼" I.D. Hollow Stem Auger**
*CREW:* **CD/ SP**
*LOCATION:* **See Boring Location Plan** *ELEVATION:* **97.5** **Page 1 of 1**

| Depth (Feet) | ASTM Symbol | Soil Description | Sample # | N Value | $W_n$ | Notes |
|---|---|---|---|---|---|---|
| 7.0" | | 7.0 inches of Aggregate | | | | |
| | SP | POORLY GRADED SAND, fine grained, brown. | | | | |
| | | | 1 | 5 | 2.7 | |
| 5.0 | | | 2 | 7 | 3.1 | |
| | | | 3 | 10 | 8.3 | |
| 10.0 | | | 4 | 6 | 4.2 | |
| 15.0 | | fine to medium grained | 5 | 4 | 2.3 | |
| 20.0 | | | 6 | * | N/R | * 50 blows for 2 inches |
| 21.5 | | Boring complete to 21.5 feet.<br>No water encountered during drilling.<br>No water encountered to cave-in at 11' 9" after completion. | | | | |

# INDEPENDENT TESTING TECHNOLOGIES, INC. LOG OF SOIL BORING

*PROJECT:* **23-235** **VANMAN ARCHITECTS & BUILDERS**
**NEW LIFE EVANGELICAL FREE CHURCH**
**HASTINGS, MINNESOTA**

*DATE:* **7/27/23** *BORING #:* **SB-4**
*START TIME:* **11:00** *END TIME:* **11:45**
*METHOD:* **3 ¼" I.D. Hollow Stem Auger**
*CREW:* **CD/ SP**
*LOCATION:* **See Boring Location Plan** *ELEVATION:* **98.0** **Page 1 of 1**

| Depth (Feet) | ASTM Symbol | Soil Description | Sample # | N Value | $W_n$ | Notes |
|---|---|---|---|---|---|---|
| 9.0" | | **9.0 inches of Aggregate** | | | | |
| | **SP** | **POORLY GRADED SAND, fine grained, brown.** | | | | |
| | | | **1** | **16** | 2.5 | |
| 5.0 | | | | | | |
| | | | **2** | **11** | 3.3 | |
| | | | **3** | **11** | 5.1 | |
| 10.0 | | | | | | |
| | | | **4** | **11** | 3.4 | |
| 15.0 | | | | | | |
| | **SM** | **SILTY SAND, fine grained, light grey, mottled.** | **5** | **22** | 9.0 | |
| 20.0 | | | | | | |
| 21.5 | | | **6** | **45** | 10.5 | |
| | | **Boring complete to 21.5 feet.**<br>**No water encountered during drilling.**<br>**No water encountered to cave-in at 11' 3" after completion.** | | | | |

# INDEPENDENT TESTING TECHNOLOGIES, INC. LOG OF SOIL BORING

*PROJECT:* **23-235** **VANMAN ARCHITECTS & BUILDERS**
**NEW LIFE EVANGELICAL FREE CHURCH**
**HASTINGS, MINNESOTA**

*DATE:* **7/28/23** *BORING #:* **SB-5**
*START TIME:* **8:00** *END TIME:* **8:45**

*METHOD:* **3 ¼" I.D. Hollow Stem Auger**
*CREW:* **CD/ SP**

*LOCATION:* **See Boring Location Plan**
*ELEVATION:* **99.9** **Page 1 of 1**

| Depth (Feet) | ASTM Symbol | Soil Description | Sample # | N Value | $W_n$ | Notes |
|---|---|---|---|---|---|---|
| 7.5" | SM | SILTY SAND, fine grained, black, TOPSOIL. | | | | |
| 2.5 | SP | POORLY GRADED SAND, fine grained, brown. | 1 | 3 | 5.4 | |
| 5.0 | SM | SILTY SAND, fine grained, brown, | 1 | 19 | 8.3 | |
| 9.5 | SP | POORLY GRADED SAND, fine grained, brown. | 2 | 14 | 6.6 | |
| | | | 3 | 13 | 10.5 | |
| 15.0 | SC-SM | SILTY CLAYEY SAND, fine grained, brown. | 4 | 3 | 11.2 | |
| 20.0 | SP-SM | POORLY GRADED SAND w/ SILT, fine grained, brown. | 5 | 12 | 9.8 | |
| 21.5 | SP | POORLY GRADED SAND, fine to medium grained, w/ GRAVEL, brown. | 6 | 52 | 2.4 | |
| | | Boring complete to 21.5 feet.<br>No water encountered during drilling.<br>No water encountered to cave-in at 12' 7" after completion. | | | | |

# INDEPENDENT TESTING TECHNOLOGIES, INC. LOG OF SOIL BORING

*PROJECT:* **23-235** **VANMAN ARCHITECTS & BUILDERS**
**NEW LIFE EVANGELICAL FREE CHURCH**
**HASTINGS, MINNESOTA**

*DATE:* **7/28/23** *BORING #:* **SB-6**
*START TIME:* **8:45** *END TIME:* **9:15**
*METHOD:* **3 ¼" I.D. Hollow Stem Auger**
*CREW:* **CD/ SP**
*LOCATION:* **See Boring Location Plan** *ELEVATION:* **102.3** **Page 1 of 1**

| Depth (Feet) | ASTM Symbol | Soil Description | Sample # | N Value | $W_n$ | Notes |
|---|---|---|---|---|---|---|
| 19.0" | SM | SILTY SAND, fine grained, black, TOPSOIL. | 1 | 2 | 8.7 | |
| 5.0 | SP-SM | POORLY GRADED SAND w/ SILT, dark brown/black<br>FILL | 2 | 3 | 5.6 | |
| 7.5 | SP | POORLY GRADED SAND, fine grained, brown. | 3 | 17 | 4.6 | |
| 10.0 | SM | SILTY SAND, fine grained, brown. | 4 | 9 | 11.8 | |
| 15.0 | | reddish brown. | 5 | 14 | 9.0 | |
| 20.0 | SP-SM | POORLY GRADED SAND w/ SILT, fine to medium grained, reddish brown. | 6 | 19 | 10.0 | |
| 21.5 | | | 7 | 42 | 7.8 | |
| | | Boring complete to 21.5 feet.<br>No water encountered during drilling.<br>No water encountered to cave-in at 11' 7" after completion. | | | | |

# INDEPENDENT TESTING TECHNOLOGIES, INC. LOG OF SOIL BORING

*PROJECT:* **23-235** **VANMAN ARCHITECTS & BUILDERS**
**NEW LIFE EVANGELICAL FREE CHURCH**
**HASTINGS, MINNESOTA**

*DATE:* **7/28/23** *BORING #:* **SB-7**
*START TIME:* **9:15** *END TIME:* **10:00**
*METHOD:* **3 ¼" I.D. Hollow Stem Auger**
*CREW:* **CD/ SP**
*LOCATION:* **See Boring Location Plan** *ELEVATION:* **103.1** **Page 1 of 1**

| Depth (Feet) | ASTM Symbol | Soil Description | Sample # | N Value | $W_n$ | Notes |
|---|---|---|---|---|---|---|
| 12.0" | SM | SILTY SAND, fine grained, dark brown, TOPSOIL. | 1 | 2 | 7.1 | |
| 5.0 | SP | POORLY GRADED SAND, fine grained, brown. | 2 | 2 | 4.8 | |
| 7.5 | SP-SM | POORLY GRADED SAND w/ SILT, fine grained, brown. | 3 | 6 | 15.5 | |
| 10.0 | SM | SILTY SAND, fine grained, brown, mottled. | 4 | 10 | 22.8 | |
| 15.0 | SP | POORLY GRADED SAND, fine to medium grained, brown. | 5 | 18 | 28.2 | |
| 20.0 | SC | CLAYEY SAND, fine grained, reddish brown, mottled. | 6 | 12 | 11.8 | |
| 21.5 | SP-SM | POORLY GRADED SAND w/ SILT, fine to medium grained, brown, mottled. | 7 | 21 | 4.3 | |
| | | Boring complete to 21.5 feet.<br>No water encountered during drilling.<br>No water encountered to cave-in at 11' 7" after completion. | | | | |

## Unified Soil Classification (USC) System (from ASTM D 2487)

| Major Divisions | | | Group Symbol | Typical Names |
|---|---|---|---|---|
| **Course-Grained Soils** More than 50% retained on the 0.075 mm (No. 200) sieve | **Gravels** 50% or more of course fraction retained on the 4.75 mm (No. 4) sieve | Clean Gravels | GW | Well-graded gravels and gravel-sand mixtures, little or no fines |
| | | | GP | Poorly graded gravels and gravel-sand mixtures, little or no fines |
| | | Gravels with Fines | GM | Silty gravels, gravel-sand-silt mixtures |
| | | | GC | Clayey gravels, gravel-sand-clay mixtures |
| | **Sands** 50% or more of course fraction passes the 4.75 (No. 4) sieve | Clean Sands | SW | Well-graded sands and gravelly sands, little or no fines |
| | | | SP | Poorly graded sands and gravelly sands, little or no fines |
| | | Sands with Fines | SM | Silty sands, sand-silt mixtures |
| | | | SC | Clayey sands, sand-clay mixtures |
| **Fine-Grained Soils** More than 50% passes the 0.075 mm (No. 200) sieve | **Silts and Clays** Liquid Limit 50% or less | | ML | Inorganic silts, very fine sands, rock four, silty or clayey fine sands |
| | | | CL | Inorganic clays of low to medium plasticity, gravelly/sandy/silty/lean clays |
| | | | OL | Organic silts and organic silty clays of low plasticity |
| | **Silts and Clays** Liquid Limit greater than 50% | | MH | Inorganic silts, micaceous or diatomaceous fine sands or silts, elastic silts |
| | | | CH | Inorganic clays or high plasticity, fat clays |
| | | | OH | Organic clays of medium to high plasticity |
| **Highly Organic Soils** | | | PT | Peat, muck, and other highly organic soils |

Prefix: G = Gravel, S = Sand, M = Silt, C = Clay, O = Organic
Suffix: W = Well Graded, P = Poorly Graded, M = Silty, L = Clay, LL < 50%, H = Clay, LL > 50%

DEPARTMENT OF TRANSPORTATION

Metropolitan District
1500 County Road B-2 West
Roseville, MN 55113

January 13, 2025

Joe Fox
Project Engineer
City of Cottage Grove
12800 Ravine Parkway South
Cottage Grove, MN 55016

SUBJECT: **New Life Church Addition**
MnDOT Review #**S25-041**
NW Quad of US 61 and Point Douglas Dr
11245 Point Douglas Dr
Cottage Grove, Washington County

Dear Joe Fox,

Thank you for submitting the site plans for the New Life Church Addition. The Minnesota Department of Transportation (MnDOT) has reviewed the documents, and has the following comments:

**US 61 Intersections**
At-grade intersections along US 61 are being phased out and converted to J-turns as this corridor approaches capacity for traditional intersections. Please be aware that, in the future, the median at this location may be closed, allowing only right-in / right-out access. Left turns would then be made using a median U-turn. Advance notice would be provided before any changes take place.

Please contact Matthew Schleusner, East Area Coordinator, at matthew.schleusner@state.mn.us or 612-270-3696 with any questions.

**Water Resources**
A MnDOT drainage permit may be required before development occurs. The permit applicant shall demonstrate that the off-site runoff entering MnDOT drainage system(s) and/or right of way will not increase. The drainage permit application, including the information below, should be submitted online to: https://olpa.dot.state.mn.us/OLPA/. Please upload this letter with the drainage permit application.

The following information must be submitted with the drainage permit application:

1. Grading plans, drainage plans, and hydraulic calculations demonstrating that proposed flows to MnDOT right of way remain the same as existing conditions or are reduced.
2. Existing and proposed drainage area maps with flow arrows and labeling that corresponds with the submitted calculations.
3. Hydro CAD model and PDF of output for the 2, 10, and 100-year Atlas 14 storm events.

Once a drainage permit application is submitted, a thorough review will be completed and additional information may be requested. Please contact Jason Swenson, Water Resources Engineering, at jason.swenson@state.mn.us or 651-234-7539 with any questions.

**Permits**
Any work that affects MnDOT right of way will require an appropriate permit. All permits are available and must be applied at: https://olpa.dot.state.mn.us/OLPA/. Upload this letter when applying for permits.

For questions regarding permit submittal requirements, please contact Jeff Dierberger of MnDOT's Metro District Permits Section at jeffrey.dierberger@state.mn.us or 651-775-0404.

**Review Submittal Options**
MnDOT's goal is to complete reviews within 30 calendar days. Review materials received electronically can be processed more rapidly. Do not submit files via a cloud service or SharePoint link. In order of preference, review materials may be submitted as:

1. Email documents and plans to metrodevreviews.dot@state.mn.us. Attachments may not exceed 20 MB (megabytes) per email. Documents can be zipped as well. If multiple emails are necessary, number each email.
2. Files over 20 MB can also be uploaded to MnDOT's Web Transfer Client site: https://mft.dot.state.mn.us. Contact metrodevreviews.dot@state.mn.us, and staff will create a shared folder in which files can be uploaded to. Please send an accompanying email with a narrative for the development.

You are welcome to contact me at regina.burstein@state.mn.us with any questions.

Sincerely,

Regina Burstein
Senior Planner

**Copy sent via email:**
Jason Swenson, Water Resources
Jeff Dierberger, Permits
Ben Klismith, Right of Way
Kaare Festvog, Traffic
Amrish Patel, Transit
Matthew Schleusner, Area Coordinator
Heather Gardner, Design
Michael Kowski, Maintenance
Molly McCormick, Ped/Bike/ADA Planning
Brandon JB Nelson, Surveying
Tod Sherman, Planning
Cameron Muhic, Planning
Scott Shaffer, Planning
Joseph Widing, Metropolitan Council

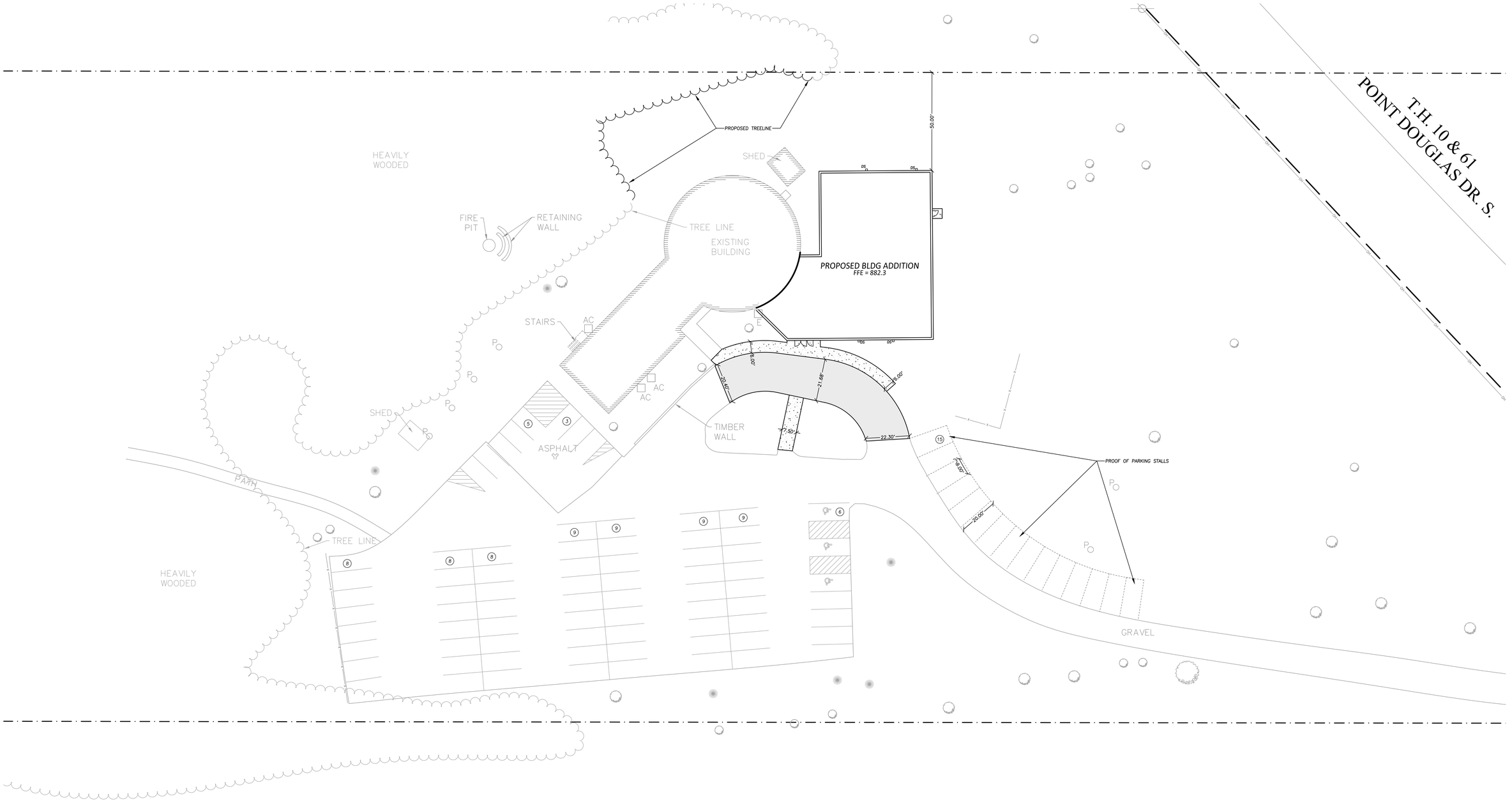


CODE COMPLIANCE:

1. WORK SHALL BE IN ACCORDANCE WITH APPLICABLE LAWS, CODES & REQUIREMENTS OF REGULATORY AGENCIES HAVING JURISDICTION.
2. NOTIFY THE OWNER'S ENGINEER OF DISCREPANCIES BETWEEN THE WORK AND APPLICABLE CODES. DO NOT WORK IN AN AFFECTED AREA UNTIL THE DISCREPANCY HAS BEEN RESOLVED.
3. VERIFY CODES IN EFFECT AT THE TIME OF THE NOTICE TO PROCEED AND STAY CURRENT WITH CODE CHANGES WHICH AFFECT THE WORK UNTIL SUBSTANTIAL COMPLETION.

*Boundary topographical & utility information was prepared by M&P Associates. This information has not been verified as to its accuracy or completeness by Rehder & Associates, Inc.*

## GOPHER STATE ONE CALL

CALL 48 HOURS BEFORE YOU DIG
TWIN CITY AREA 651-454-0002
MN. TOLL FREE 1-800-252-1166

## SITE SUMMARY

SITE AREA = 8.68 ACRES
DISTURBED AREA = 0.58 ACRES
EXISTING IMPERVIOUS AREA = 1.24 ACRES (14.3%)
POST CONSTRUCTION IMPERVIOUS AREA = 1.33 ACRES (15.3%)
OPEN SPACE = 100% - 15.3% = 84.7%
NEW IMPERVIOUS AREA = 1.33 - 1.24 = 0.09 ACRES
RECONSTRUCTED IMPERVIOUS AREA = 0.11 ACRES

### PARKING STALLS REQUIRED

| | |
|---|---|
| ASSEMBLY = 299 SEATS @ 1 STALL/4 SEATS = | = 75 STALLS |
| CHILD CLASSROOM = 11 CLASSROOMS @ 1 STALL/CLASSROOM | = 11 STALLS |
| CHILD CLASSROOM = 184 STUDENTS @ 1 STALL/100 STUDENTS | = 2 STALLS |
| TOTAL | = 88 STALLS |

### PARKING STALLS PROVIDED

| | |
|---|---|
| STANDARD STALLS | = 71 STALLS |
| ACCESSIBLE STALLS | = 3 STALLS |
| PROOF OF PARKING STALLS | = 15 STALLS |
| TOTAL | = 88 STALLS |

### LEGEND

- BOUNDARY/ROW/BLOCK LINE
- EASEMENT
- BUILDING/PARKING SETBACK LINE
- PROPOSED CONCRETE
- PROPOSED BITUMINOUS

N

0 10 20 40 60
Scale in Feet

REHDER & ASSOCIATES, INC.
Civil Engineers & Land Surveyors
3440 Federal Drive, Suite 110
Eagan, MN 55122
Telephone 651-452-5051
www.rehder.com

PROJECT NO.: 251-2393.058 DRAWING FILE: 2393058.DWG

I hereby certify that this plan was prepared by me or under my direct supervision and that I am a duly Licensed Professional Engineer under the laws of the State of Minnesota.

PRELIMINARY

Name _____ Date _____ Reg. No. _____

Issued
CITY SUBMITTAL 1-28-26

SITE DIMENSION PLAN
NEW LIFE EFREE CHURCH
CITY OF COTTAGE GROVE

SHEET NUMBER
C2

New Life
EVANGELICAL FREE CHURCH

# Letter of Concurrence

To whom it may concern,

New Life Evangelical Free Church located at 11245 Point Douglas Dr S, Hastings, MN, 55033, authorizes Station 19 Architects to represent us with respect to Planning Applications at Planning Commission / City Council meeting.

Respectfully,

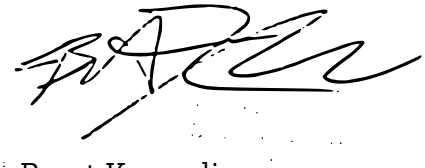

Brent Kompelien
Senior Pastor

| | | | | | |
|---|---|---|---|---|---|
| **Project** | | **Catalog #** | | **Type** | |
| **Prepared by** | | **Notes** | | **Date** | |

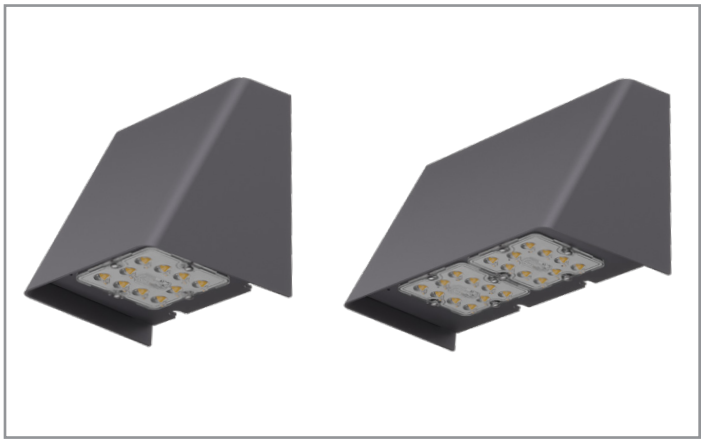

# McGraw-Edison

## GKO Gekko

Wall Mount Luminaire

### Product Features

Light ARchitect™ FADC

### Product Certifications

DLC LISTED [1] DLC LISTED PREMIUM [1] ISO CERTIFIED UL CERTIFIED FC CLASS A IP66

BAA BUY AMERICAN ACT AVAILABLE TAA TRADE AGREEMENTS ACT AVAILABLE BABA BUILD AMERICA BUY AMERICA AVAILABLE DARKSKY APPROVED [2] 5 YEAR LIMITED WARRANTY RoHS COMPLIANT

### Interactive Menu


- Ordering Information page 2
- Product Specifications page 2
- Optical Configurations page 3
- Energy and Performance Data page 4
- Control Options page 10


### Quick Facts

- Available in small and medium housing sizes
- Choice of 5 optical distributions
- 11 lumen packages from 750 up to 13,500
- Efficacies up to 169 lumens per watt

### Connected Systems

- WaveLinx PRO Wireless
- WaveLinx LITE Wireless

## Dimensional Details

**PB1**

**Net Weight:** 6.0 lbs (2.7 kg)

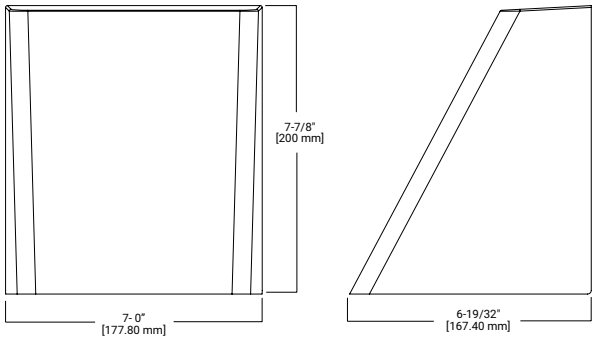


**PB2**

**Net Weight:** 10.6 lbs (4.8 kg)

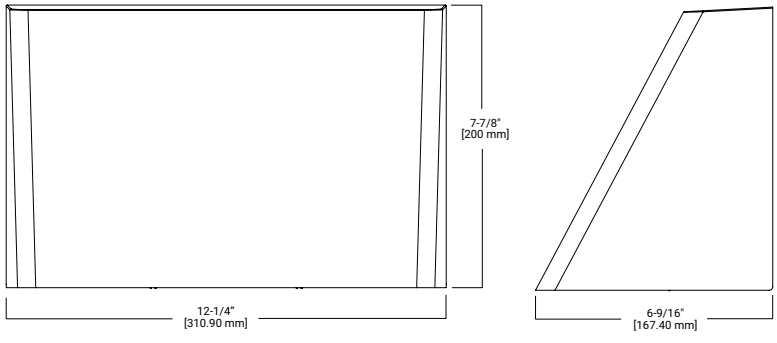


**NOTES:**
1. Visit https://www.designlights.org/search/ to confirm qualification. Not all product variations are DLC qualified.
2. IDA Certified for 3000K CCT and warmer only.

## Ordering Information

SAMPLE NUMBER: **GKO-PB2A-740-U-T3-BK**

| Product Family | Light Engine Configuration | | Lumen Output | Color Temperature | Voltage | Distribution | Finish |
|---|---|---|---|---|---|---|---|
| | Light Engine | Size | | | | | |
| **GKO**=Gekko Wall Luminaire<br>**BAA-GKO**=Gekko Buy American Act Compliant [13]<br>**TAA-GKO**=Gekko Trade Agreements Act Compliant [13]<br>**BABAF-GKO**=Gekko Build America Buy America Act Compliant for FHWA funded projects [14] | **PB**=Mini 10-LED Light Square | **1**=Small, 1 Square<br>**2**=Medium, 2 Squares | **A**=Output Level 1<br>**B**=Output Level 2<br>**C**=Output Level 3<br>**D**=Output Level 4<br>**E**=Output Level 5<br>**F**=Output Level 6 [1] | **722**=70 CRI, 2200K CCT<br>**727**=70 CRI, 2700K CCT<br>**730**=70 CRI, 3000K CCT<br>**735**=70 CRI, 3500K CCT<br>**740**=70 CRI, 4000K CCT<br>**750**=70 CRI, 5000K CCT<br>**827**=80 CRI, 2700K CCT<br>**830**=80 CRI, 3000K CCT<br>**835**=80 CRI, 3500K CCT<br>**840**=80 CRI, 4000K CCT<br>**850**=80 CRI, 5000K CCT<br>**AMB**=Amber 590nm [2] | **U**=120-277V<br>**1**=120V<br>**2**=208V<br>**3**=240V<br>**4**=277V<br>**8**=480V [15, 17]<br>**9**=347V [17] | **T1**=Type I<br>**T2R**=Type II Round<br>**T2U**=Type II Urban<br>**T3**=Type III<br>**T4W**=Type IV Wide | **AP**=Grey<br>**BZ**=Bronze<br>**BK**=Black<br>**DP**=Dark Platinum<br>**GM**=Graphite Metallic<br>**NW**=New White |

| Options (Add as Suffix) | Controls and Systems Options (Add as Suffix) | Accessories (Order Separately) |
|---|---|---|
| **F**=Single Fused (120, 277 or 347, Specify Voltage)<br>**FF**=Double Fused (208, 240 or 480, Specify Voltage)<br>**20MSP**=Parallel 20kV MOV Surge Protective Device<br>**20K**=Series 20kV UL1449 Fused Surge Protective Device<br>**2L**=Two Circuits [3]<br>**EBP**=6W Battery Pack<br>**CBP**=6W Battery Pack, Cold Weather Rated [4, 10]<br>**CBP-CEC**=8W Battery Pack, Cold Weather Rated, CEC Compliant [4, 10]<br>**HSS**=Factory Installed House Side Shield<br>**HA**=50C° High Ambient [10]<br>**CC**=Coastal Construction [5] | **BPC**=Button Type Photocontrol (120, 208, 240 or 277V. Must Specify Voltage)<br>**FADC**=Field Adjustable Dimming Controller [8]<br>**SPB1=**Dimming Occupancy Sensor with Bluetooth Interface, <8' Mounting [6, 7, 8, 11]<br>**SPB2=**Dimming Occupancy Sensor with Bluetooth Interface, 8' - 20' Mounting [6,7,8,11]<br>**MS/DIM-L08**=Motion Sensor for Dimming Operation, <8' Mounting [7, 8, 11, 12]<br>**MS/DIM-L20**=Motion Sensor for Dimming Operation, 8'-20' Mounting [7, 8, 11, 12]<br>**WPS2WH**=WaveLinx Pro, SR Driver, Dimming Motion and Daylight, WAC Programmable, 7'-15' Mounting [7, 8, 11, 16]<br>**WPS4WH**=WaveLinx Pro, SR Driver, Dimming Motion and Daylight, WAC Programmable, 15'-40' Mounting [7, 8, 11, 16]<br>**WLS2WH**=WaveLinx Lite, SR Driver, Dimming Motion and Daylight, Bluetooth Programmable, 7'-15' Mounting [7, 8, 11]<br>**WLS4WH**=WaveLinx Lite, SR Driver, Dimming Motion and Daylight, Bluetooth Programmable, 15'-40' Mounting [7, 8, 11] | **PBHSS**=House Side Shield (Single) [9]<br>**PBPFS**=Perimeter Fence Shield Kit (4 Pieces)<br>**FSIR-100**= Wireless Configuration Tool for MS/DIM [12]<br>**MA1252**=10kV Surge Module Replacement<br>**BB/GKO-XX**=Surface mount backbox [19] |

**NOTES**:
1. Output Level 6 not available with PB2
2. Narrow-band 590nm +/- 5nm for wildlife and observatory use. Choose Output Level 1; supplied at 300mA for PB1, 600mA for PB2. Not available with HA option. Exact luminaire wattage available in IES files.
3. Not available with PB1. Not available with FF option, or controls options at 347V or 480V.
4. Operates at -20°C to +40°C. Not available with PB1 or HA option.
5. Coastal construction finish salt spray tested to over 5,000-hours per ASTM B117, with a scribe rating of 9 per ASTM D1654.
6. Smart device with mobile application required to change system defaults. See controls section for details.
7. Includes integral photosensor.
8. Not available with PB1 at Output Level 1 or 2. Not available with other motion activated control options.
9. One required per PB light square.
10. Combination of CBP and HA not available with PB2 at output level 4 or 5.
11. When motion controls are selected, PB1 uses surface mount sensor in PB2 housing. PB2 uses side-mount motion sensor in PB2 housing.
12. The FSIR-100 configuration tool is required to adjust parameters including high and low modes, sensitivity, time delay, cutoff and more. Consult your lighting representative at Cooper Lighting Solutions for more information.
13. Only product configurations with these designated prefixes are built to be compliant with the Buy American Act of 1933 (BAA) or Trade Agreements Act of 1979 (TAA), respectively. Please refer to DOMESTIC PREFERENCES website for more information. Components shipped separately may be separately analyzed under domestic preference requirements.
14. Only product configurations with these prefixes are built to be compliant with the Buy American Act of 1933 (BAA) or the Build America Buy America Act (BABA). BABA is the minimum Government compliance requirement for the Build America Buy America standards which is part of the Infrastructure and Investment Jobs Act (IIJA). Individual Government Agencies may have more stringent compliance standards. Please refer to the DOMESTIC PREFERENCES website or consult the CLS Domestic Preferences team for more information. Components shipped separately may be separately analyzed under domestic preference requirements.
15. 480V not to be used with ungrounded or impedance grounded systems.
16. WAC Gateway required to enable field-configurability: Order WAC-PoE and WPOE-120 (10V to PoE injector) power supply if needed.
17. Not available with PB1A and PB1B.
18. Operates at 0°C to +55°C.
19. Replace XX with color designation. Includes 5 gasketed 3/4" conduit entry points.

## Product Specifications

### Construction
- Available in small (1 square) and medium (2 square) sizes
- Die-cast aluminum housing
- IP66 rated housing
- IK10 impact rated

### Optics
- 10-LED square light engine
- 5 optical distributions
- IDA Certified (3000K CCT and warmer only)
- 2 versions of field-installable shielding for superior spill light control
  - Single-piece snap-on square shields (HSS)
  - Multiple-piece configurable vertical perimeter shielding (PFS)

### Electrical
- Standard with 0-10V dimming
- Standard with 10kV surge device
- 10kV or 20kV surge protective options with series or parallel configurations
- -40°C to 40°C ambient temperature operating range with optional high ambient (HA) 50°C

### Controls
- Luminaire available with the field adjustable dimming controller (FADC) to manually adjust wattage and reduce the total lumen output and light levels. Default setting is the highest position at the lumen output selected

### Finish
- Housing finished in super durable TGIC polyester powder coat paint, 2.5 mil nominal thickness
- 3,000-hours per ASTM B117, with a scribe rating of 7 per ASTM D1654 for standard color finish
- Coastal Construction (CC) option available

### Typical Applications
- Exterior wall, walkway

### Compliance
- BAA domestic preference option meets BAA requirements. See DOMESTIC PREFERENCES website or consult the CLS Domestic Preferences team for more information
- FHWA and FTA agencies are utilizing their BAA rules for BABA compliance. Cooper's products with a BAA designation are manufactured in the US and utilize a BAA COTS exemption rule for compliance. To verify a configured product with specific accessories and options meet BABA Domestic Preference Requirements; submit this catalog number to Cooper Lighting Quotation team for validation by our Engineering and Manufacturing teams.
- Please refer to the DOMESTIC PREFERENCES website or consult the CLS Domestic Preferences team for more information. Components shipped separately may be separately analyzed under domestic preference requirements

### Warranty
- Five year limited warranty, consult website for details. www.cooperlighting.com/legal

## Optical Distributions

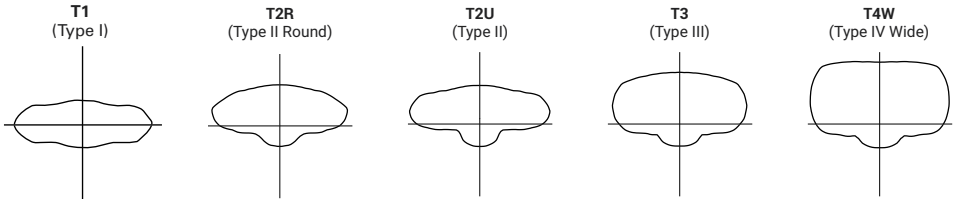


## Energy and Performance Data

**Lumen Maintenance**

| Ambient Temperature | 25,000 hours* | 50,000 hours* | 60,000 hours* | 100,000 hours* | L70* |
|---|---|---|---|---|---|
| 25°C | 98.1% | 96.3% | 95.6% | 92.8% | >102,000 |
| 40°C | 98.0% | 96.1% | 95.3% | 92.3% | >102,000 |
| 50°C | 97.8% | 95.6% | 94.8% | 91.4% | >102,000 |

**Note:** * Calculations provided in accordance with IES TM-21-11 using the configuration resulting in highest LED temperature.

**Lumen Multiplier**

| Ambient Temperature | Lumen Multiplier |
|---|---|
| 0°C | 1.02 |
| 10°C | 1.01 |
| 25°C | 1.00 |
| 40°C | 0.99 |
| 50°C | 0.97 |

**FADC Settings**

| FADC Position | Percent of Typical Lumen Output |
|---|---|
| 1 | 25% |
| 2 | 48% |
| 3 | 56% |
| 4 | 65% |
| 5 | 75% |
| 6 | 80% |
| 7 | 85% |
| 8 | 90% |
| 9 | 95% |
| 10 | 100% |

**Note:** +/-5% typical value

**LED Color Multipliers**

| | CCT | | | | |
|---|---|---|---|---|---|
| | 2200 | 2700 | 3000 | 4000 | 5000 |
| CRI | Lumen Multiplier* | | | | |
| 70 | 0.83 | 0.92 | 0.95 | 1.00 | 1.00 |

**Note:** * Estimates, refer to IES files for accuracy.

## Accessories

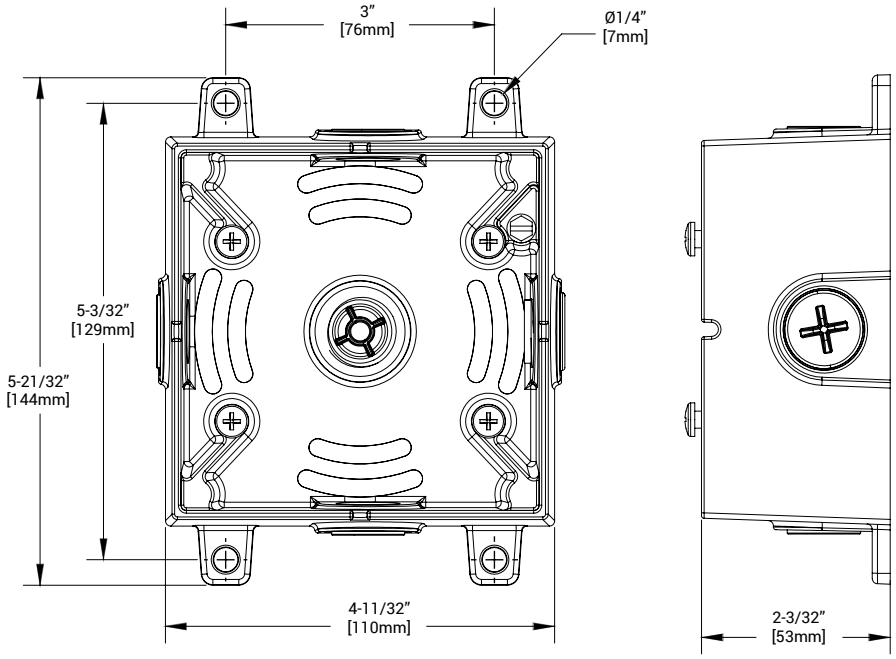

## Energy and Performance Data

View GKO Gekko IES files

| Number of Light Squares | | | 1 Square (PB1) | | | | | | 2 Squares (PB2) | | | | |
|---|---|---|---|---|---|---|---|---|---|---|---|---|---|
| Output Level | | | A | B | C | D | E | F | A | B | C | D | E |
| Drive Current | | | 180mA | 300mA | 520mA | 740mA | 1100mA | 1500mA | 800mA | 1250mA | 1700mA | 1130mA | 1500mA |
| Nominal Power (Watts) | | | 6 | 9 | 17 | 25 | 38 | 54 | 26 | 41 | 57 | 78 | 107 |
| Input Current @ 120V (A) | | | 0.040 | 0.079 | 0.145 | 0.218 | 0.328 | 0.465 | 0.224 | 0.353 | 0.494 | 0.640 | 0.875 |
| Input Current @ 208V (A) | | | 0.025 | 0.048 | 0.085 | 0.127 | 0.189 | 0.264 | 0.131 | 0.203 | 0.280 | 0.367 | 0.498 |
| Input Current @ 240V (A) | | | 0.023 | 0.044 | 0.075 | 0.112 | 0.165 | 0.230 | 0.115 | 0.176 | 0.243 | 0.320 | 0.432 |
| Input Current @ 277V (A) | | | 0.021 | 0.041 | 0.067 | 0.099 | 0.144 | 0.200 | 0.102 | 0.154 | 0.212 | 0.280 | 0.375 |
| Input Current @ 347V (A) | | | n/a | n/a | 0.056 | 0.076 | 0.112 | 0.156 | 0.079 | 0.121 | 0.166 | 0.219 | 0.300 |
| Input Current @ 480V (A) | | | n/a | n/a | 0.045 | 0.058 | 0.083 | 0.114 | 0.060 | 0.089 | 0.121 | 0.160 | 0.217 |
| CCT/ CRI | Optics | | PB1A | PB1B | PB1C | PB1D | PB1E | PB1F | PB2A | PB2B | PB2C | PB2D | PB2E |
| 70 CRI 2200K CCT | T1 | Lumens | 671 | 1,307 | 2,244 | 3,184 | 4,504 | 5,814 | 3,658 | 5,547 | 7,241 | 9,059 | 11,179 |
| | | Lumens per Watt | 140 | 141 | 132 | 124 | 116 | 107 | 138 | 133 | 124 | 119 | 107 |
| | | BUG Rating | B0-U0-G0 | B1-U0-G1 | B1-U0-G1 | B1-U0-G1 | B2-U0-G2 | B2-U0-G2 | B1-U0-G1 | B2-U0-G2 | B2-U0-G2 | B3-U0-G3 | B3-U0-G3 |
| | T2R | Lumens | 647 | 1,259 | 2,161 | 3,067 | 4,338 | 5,600 | 3,523 | 5,342 | 6,974 | 8,726 | 10,767 |
| | | Lumens per Watt | 135 | 135 | 127 | 120 | 112 | 103 | 133 | 128 | 120 | 115 | 103 |
| | | BUG Rating | B0-U0-G0 | B0-U0-G0 | B1-U0-G1 | B1-U0-G1 | B1-U0-G1 | B1-U0-G1 | B1-U0-G1 | B1-U0-G1 | B2-U0-G2 | B2-U0-G2 | B2-U0-G2 |
| | T2U | Lumens | 640 | 1,246 | 2,138 | 3,034 | 4,292 | 5,541 | 3,486 | 5,286 | 6,901 | 8,634 | 10,653 |
| | | Lumens per Watt | 133 | 134 | 126 | 119 | 111 | 102 | 132 | 126 | 119 | 113 | 102 |
| | | BUG Rating | B0-U0-G0 | B0-U0-G0 | B1-U0-G1 | B1-U0-G1 | B1-U0-G1 | B1-U0-G1 | B1-U0-G1 | B1-U0-G1 | B2-U0-G2 | B2-U0-G2 | B2-U0-G2 |
| | T3 | Lumens | 637 | 1,241 | 2,130 | 3,023 | 4,276 | 5,520 | 3,473 | 5,266 | 6,875 | 8,601 | 10,613 |
| | | Lumens per Watt | 133 | 133 | 125 | 118 | 110 | 101 | 131 | 126 | 118 | 113 | 101 |
| | | BUG Rating | B0-U0-G0 | B0-U0-G0 | B1-U0-G1 | B1-U0-G1 | B1-U0-G1 | B1-U0-G1 | B1-U0-G1 | B1-U0-G1 | B1-U0-G1 | B2-U0-G2 | B2-U0-G2 |
| | T4W | Lumens | 618 | 1,203 | 2,066 | 2,932 | 4,147 | 5,353 | 3,368 | 5,107 | 6,667 | 8,341 | 10,293 |
| | | Lumens per Watt | 129 | 129 | 122 | 115 | 107 | 98 | 127 | 122 | 115 | 109 | 98 |
| | | BUG Rating | B0-U0-G0 | B0-U0-G1 | B1-U0-G1 | B1-U0-G1 | B1-U0-G1 | B1-U0-G1 | B1-U0-G1 | B1-U0-G1 | B1-U0-G2 | B2-U0-G2 | B2-U0-G2 |
| 70 CRI 2700K CCT | T1 | Lumens | 744 | 1,449 | 2,487 | 3,529 | 4,992 | 6,445 | 4,055 | 6,148 | 8,026 | 10,042 | 12,391 |
| | | Lumens per Watt | 155 | 156 | 146 | 138 | 129 | 118 | 153 | 147 | 138 | 132 | 118 |
| | | BUG Rating | B0-U0-G0 | B1-U0-G1 | B1-U0-G1 | B1-U0-G1 | B2-U0-G2 | B2-U0-G2 | B2-U0-G2 | B2-U0-G2 | B3-U0-G3 | B3-U0-G3 | B3-U0-G3 |
| | T2R | Lumens | 717 | 1,395 | 2,395 | 3,399 | 4,808 | 6,207 | 3,905 | 5,921 | 7,731 | 9,672 | 11,934 |
| | | Lumens per Watt | 149 | 150 | 141 | 133 | 124 | 114 | 147 | 142 | 133 | 127 | 114 |
| | | BUG Rating | B0-U0-G0 | B1-U0-G1 | B1-U0-G1 | B1-U0-G1 | B1-U0-G1 | B1-U0-G1 | B1-U0-G1 | B1-U0-G1 | B2-U0-G2 | B2-U0-G2 | B2-U0-G2 |
| | T2U | Lumens | 709 | 1,381 | 2,370 | 3,363 | 4,757 | 6,142 | 3,864 | 5,859 | 7,649 | 9,570 | 11,808 |
| | | Lumens per Watt | 148 | 148 | 139 | 131 | 123 | 113 | 146 | 140 | 131 | 126 | 113 |
| | | BUG Rating | B0-U0-G0 | B1-U0-G1 | B1-U0-G1 | B1-U0-G1 | B1-U0-G1 | B2-U0-G2 | B1-U0-G1 | B2-U0-G2 | B2-U0-G2 | B2-U0-G2 | B3-U0-G3 |
| | T3 | Lumens | 707 | 1,375 | 2,361 | 3,350 | 4,739 | 6,118 | 3,849 | 5,837 | 7,620 | 9,533 | 11,763 |
| | | Lumens per Watt | 147 | 148 | 139 | 131 | 122 | 112 | 145 | 140 | 131 | 125 | 112 |
| | | BUG Rating | B0-U0-G0 | B0-U0-G0 | B1-U0-G1 | B1-U0-G1 | B1-U0-G1 | B1-U0-G1 | B1-U0-G1 | B1-U0-G1 | B1-U0-G2 | B2-U0-G2 | B2-U0-G2 |
| | T4W | Lumens | 685 | 1,334 | 2,290 | 3,249 | 4,596 | 5,934 | 3,733 | 5,661 | 7,390 | 9,246 | 11,409 |
| | | Lumens per Watt | 143 | 143 | 135 | 127 | 119 | 109 | 141 | 135 | 127 | 121 | 109 |
| | | BUG Rating | B0-U0-G0 | B0-U0-G1 | B1-U0-G1 | B1-U0-G1 | B1-U0-G1 | B1-U0-G1 | B1-U0-G1 | B1-U0-G1 | B1-U0-G2 | B2-U0-G2 | B2-U0-G2 |

| Number of Light Squares | | | 1 Square (PB1) | | | | | | 2 Squares (PB2) | | | | |
|---|---|---|---|---|---|---|---|---|---|---|---|---|---|
| Output Level | | | A | B | C | D | E | F | A | B | C | D | E |
| Drive Current | | | 180mA | 300mA | 520mA | 740mA | 1100mA | 1500mA | 800mA | 1250mA | 1700mA | 1130mA | 1500mA |
| Nominal Power (Watts) | | | 6 | 9 | 17 | 25 | 38 | 54 | 26 | 41 | 57 | 78 | 107 |
| Input Current @ 120V (A) | | | 0.040 | 0.079 | 0.145 | 0.218 | 0.328 | 0.465 | 0.224 | 0.353 | 0.494 | 0.640 | 0.875 |
| Input Current @ 208V (A) | | | 0.025 | 0.048 | 0.085 | 0.127 | 0.189 | 0.264 | 0.131 | 0.203 | 0.280 | 0.367 | 0.498 |
| Input Current @ 240V (A) | | | 0.023 | 0.044 | 0.075 | 0.112 | 0.165 | 0.230 | 0.115 | 0.176 | 0.243 | 0.320 | 0.432 |
| Input Current @ 277V (A) | | | 0.021 | 0.041 | 0.067 | 0.099 | 0.144 | 0.200 | 0.102 | 0.154 | 0.212 | 0.280 | 0.375 |
| Input Current @ 347V (A) | | | n/a | n/a | 0.056 | 0.076 | 0.112 | 0.156 | 0.079 | 0.121 | 0.166 | 0.219 | 0.300 |
| Input Current @ 480V (A) | | | n/a | n/a | 0.045 | 0.058 | 0.083 | 0.114 | 0.060 | 0.089 | 0.121 | 0.160 | 0.217 |
| CCT/ CRI | Optics | | PB1A | PB1B | PB1C | PB1D | PB1E | PB1F | PB2A | PB2B | PB2C | PB2D | PB2E |
| 70 CRI 3000K CCT | T1 | Lumens | 760 | 1,480 | 2,541 | 3,606 | 5,100 | 6,585 | 4,143 | 6,282 | 8,201 | 10,260 | 12,660 |
| | | Lumens per Watt | 158 | 159 | 149 | 141 | 132 | 121 | 156 | 150 | 141 | 135 | 121 |
| | | BUG Rating | B0-U0-G0 | B1-U0-G1 | B1-U0-G1 | B1-U0-G1 | B2-U0-G2 | B2-U0-G2 | B2-U0-G2 | B2-U0-G2 | B3-U0-G3 | B3-U0-G3 | B3-U0-G3 |
| | T2R | Lumens | 732 | 1,426 | 2,447 | 3,473 | 4,912 | 6,342 | 3,990 | 6,050 | 7,899 | 9,882 | 12,194 |
| | | Lumens per Watt | 153 | 153 | 144 | 136 | 127 | 116 | 151 | 145 | 136 | 130 | 116 |
| | | BUG Rating | B0-U0-G0 | B1-U0-G1 | B1-U0-G1 | B1-U0-G1 | B1-U0-G1 | B2-U0-G2 | B1-U0-G1 | B1-U0-G1 | B2-U0-G2 | B2-U0-G2 | B2-U0-G2 |
| | T2U | Lumens | 725 | 1,411 | 2,422 | 3,436 | 4,861 | 6,275 | 3,948 | 5,986 | 7,815 | 9,778 | 12,065 |
| | | Lumens per Watt | 151 | 152 | 142 | 134 | 126 | 115 | 149 | 143 | 134 | 128 | 115 |
| | | BUG Rating | B0-U0-G0 | B1-U0-G1 | B1-U0-G1 | B1-U0-G1 | B1-U0-G1 | B2-U0-G2 | B1-U0-G1 | B2-U0-G2 | B2-U0-G2 | B2-U0-G2 | B3-U0-G3 |
| | T3 | Lumens | 722 | 1,405 | 2,412 | 3,423 | 4,842 | 6,251 | 3,933 | 5,964 | 7,786 | 9,741 | 12,019 |
| | | Lumens per Watt | 150 | 151 | 142 | 134 | 125 | 115 | 148 | 143 | 134 | 128 | 115 |
| | | BUG Rating | B0-U0-G0 | B0-U0-G0 | B1-U0-G1 | B1-U0-G1 | B1-U0-G1 | B1-U0-G1 | B1-U0-G1 | B1-U0-G1 | B1-U0-G2 | B2-U0-G2 | B2-U0-G2 |
| | T4W | Lumens | 700 | 1,363 | 2,340 | 3,320 | 4,696 | 6,063 | 3,814 | 5,784 | 7,551 | 9,447 | 11,657 |
| | | Lumens per Watt | 146 | 147 | 138 | 130 | 121 | 111 | 144 | 138 | 130 | 124 | 111 |
| | | BUG Rating | B0-U0-G0 | B0-U0-G1 | B1-U0-G1 | B1-U0-G1 | B1-U0-G1 | B1-U0-G1 | B1-U0-G1 | B1-U0-G1 | B2-U0-G2 | B2-U0-G2 | B2-U0-G2 |
| 70 CRI 3500K CCT | T1 | Lumens | 774 | 1,507 | 2,587 | 3,672 | 5,193 | 6,705 | 4,218 | 6,396 | 8,350 | 10,447 | 12,891 |
| | | Lumens per Watt | 161 | 162 | 152 | 143 | 134 | 123 | 159 | 153 | 143 | 137 | 123 |
| | | BUG Rating | B0-U0-G0 | B1-U0-G1 | B1-U0-G1 | B1-U0-G1 | B2-U0-G2 | B2-U0-G2 | B2-U0-G2 | B2-U0-G2 | B3-U0-G3 | B3-U0-G3 | B3-U0-G3 |
| | T2R | Lumens | 746 | 1,452 | 2,492 | 3,536 | 5,002 | 6,458 | 4,063 | 6,160 | 8,043 | 10,062 | 12,416 |
| | | Lumens per Watt | 155 | 156 | 147 | 138 | 129 | 118 | 153 | 147 | 138 | 132 | 119 |
| | | BUG Rating | B0-U0-G0 | B1-U0-G1 | B1-U0-G1 | B1-U0-G1 | B1-U0-G1 | B2-U0-G2 | B1-U0-G1 | B1-U0-G1 | B2-U0-G2 | B2-U0-G2 | B2-U0-G2 |
| | T2U | Lumens | 738 | 1,436 | 2,466 | 3,499 | 4,949 | 6,390 | 4,020 | 6,095 | 7,958 | 9,956 | 12,285 |
| | | Lumens per Watt | 154 | 154 | 145 | 137 | 128 | 117 | 152 | 146 | 137 | 131 | 117 |
| | | BUG Rating | B0-U0-G0 | B1-U0-G1 | B1-U0-G1 | B1-U0-G1 | B1-U0-G1 | B2-U0-G2 | B1-U0-G1 | B2-U0-G2 | B2-U0-G2 | B2-U0-G2 | B3-U0-G3 |
| | T3 | Lumens | 735 | 1,431 | 2,456 | 3,486 | 4,930 | 6,365 | 4,005 | 6,072 | 7,928 | 9,918 | 12,238 |
| | | Lumens per Watt | 153 | 154 | 144 | 136 | 127 | 117 | 151 | 145 | 136 | 130 | 117 |
| | | BUG Rating | B0-U0-G0 | B0-U0-G0 | B1-U0-G1 | B1-U0-G1 | B1-U0-G1 | B1-U0-G1 | B1-U0-G1 | B1-U0-G1 | B2-U0-G2 | B2-U0-G2 | B2-U0-G2 |
| | T4W | Lumens | 713 | 1,388 | 2,382 | 3,381 | 4,782 | 6,173 | 3,884 | 5,889 | 7,689 | 9,619 | 11,869 |
| | | Lumens per Watt | 149 | 149 | 140 | 132 | 124 | 113 | 147 | 141 | 132 | 126 | 113 |
| | | BUG Rating | B0-U0-G0 | B0-U0-G1 | B1-U0-G1 | B1-U0-G1 | B1-U0-G1 | B1-U0-G1 | B1-U0-G1 | B1-U0-G1 | B2-U0-G2 | B2-U0-G2 | B2-U0-G2 |

| Number of Light Squares | | | 1 Square (PB1) | | | | | | 2 Squares (PB2) | | | | |
|---|---|---|---|---|---|---|---|---|---|---|---|---|---|
| Output Level | | | A | B | C | D | E | F | A | B | C | D | E |
| Drive Current | | | 180mA | 300mA | 520mA | 740mA | 1100mA | 1500mA | 800mA | 1250mA | 1700mA | 1130mA | 1500mA |
| Nominal Power (Watts) | | | 6 | 9 | 17 | 25 | 38 | 54 | 26 | 41 | 57 | 78 | 107 |
| Input Current @ 120V (A) | | | 0.040 | 0.079 | 0.145 | 0.218 | 0.328 | 0.465 | 0.224 | 0.353 | 0.494 | 0.640 | 0.875 |
| Input Current @ 208V (A) | | | 0.025 | 0.048 | 0.085 | 0.127 | 0.189 | 0.264 | 0.131 | 0.203 | 0.280 | 0.367 | 0.498 |
| Input Current @ 240V (A) | | | 0.023 | 0.044 | 0.075 | 0.112 | 0.165 | 0.230 | 0.115 | 0.176 | 0.243 | 0.320 | 0.432 |
| Input Current @ 277V (A) | | | 0.021 | 0.041 | 0.067 | 0.099 | 0.144 | 0.200 | 0.102 | 0.154 | 0.212 | 0.280 | 0.375 |
| Input Current @ 347V (A) | | | n/a | n/a | 0.056 | 0.076 | 0.112 | 0.156 | 0.079 | 0.121 | 0.166 | 0.219 | 0.300 |
| Input Current @ 480V (A) | | | n/a | n/a | 0.045 | 0.058 | 0.083 | 0.114 | 0.060 | 0.089 | 0.121 | 0.160 | 0.217 |
| CCT/ CRI | Optics | | PB1A | PB1B | PB1C | PB1D | PB1E | PB1F | PB2A | PB2B | PB2C | PB2D | PB2E |
| 70 CRI 4000K 5000K CCT | T1 | Lumens | 809 | 1,575 | 2,703 | 3,836 | 5,426 | 7,005 | 4,407 | 6,683 | 8,724 | 10,915 | 13,468 |
| | | Lumens per Watt | 169 | 169 | 159 | 150 | 140 | 129 | 166 | 160 | 150 | 143 | 129 |
| | | BUG Rating | B0-U0-G0 | B1-U0-G1 | B1-U0-G1 | B1-U0-G1 | B2-U0-G2 | B2-U0-G2 | B2-U0-G2 | B2-U0-G2 | B3-U0-G3 | B3-U0-G3 | B3-U0-G3 |
| | T2R | Lumens | 779 | 1,517 | 2,604 | 3,695 | 5,226 | 6,747 | 4,245 | 6,436 | 8,403 | 10,513 | 12,972 |
| | | Lumens per Watt | 162 | 163 | 153 | 144 | 135 | 124 | 160 | 154 | 144 | 138 | 124 |
| | | BUG Rating | B0-U0-G0 | B1-U0-G1 | B1-U0-G1 | B1-U0-G1 | B1-U0-G1 | B2-U0-G2 | B1-U0-G1 | B2-U0-G2 | B2-U0-G2 | B2-U0-G2 | B3-U0-G3 |
| | T2U | Lumens | 771 | 1,501 | 2,576 | 3,656 | 5,171 | 6,676 | 4,200 | 6,368 | 8,314 | 10,402 | 12,835 |
| | | Lumens per Watt | 161 | 161 | 152 | 143 | 134 | 122 | 158 | 152 | 143 | 137 | 123 |
| | | BUG Rating | B0-U0-G0 | B1-U0-G1 | B1-U0-G1 | B1-U0-G1 | B1-U0-G1 | B2-U0-G2 | B1-U0-G1 | B2-U0-G2 | B2-U0-G2 | B2-U0-G2 | B3-U0-G3 |
| | T3 | Lumens | 768 | 1,495 | 2,566 | 3,642 | 5,151 | 6,650 | 4,184 | 6,344 | 8,283 | 10,362 | 12,786 |
| | | Lumens per Watt | 160 | 161 | 151 | 142 | 133 | 122 | 158 | 152 | 142 | 136 | 122 |
| | | BUG Rating | B0-U0-G0 | B0-U0-G0 | B1-U0-G1 | B1-U0-G1 | B1-U0-G1 | B1-U0-G1 | B1-U0-G1 | B1-U0-G1 | B2-U0-G2 | B2-U0-G2 | B2-U0-G2 |
| | T4W | Lumens | 745 | 1,450 | 2,489 | 3,532 | 4,996 | 6,450 | 4,058 | 6,153 | 8,033 | 10,050 | 12,401 |
| | | Lumens per Watt | 155 | 156 | 146 | 138 | 129 | 118 | 153 | 147 | 138 | 132 | 118 |
| | | BUG Rating | B0-U0-G0 | B0-U0-G1 | B1-U0-G1 | B1-U0-G1 | B1-U0-G1 | B1-U0-G1 | B1-U0-G1 | B1-U0-G1 | B2-U0-G2 | B2-U0-G2 | B2-U0-G2 |

| Number of Light Squares | | | 1 Square (PB1) | | | | | | 2 Squares (PB2) | | | | |
|---|---|---|---|---|---|---|---|---|---|---|---|---|---|
| Output Level | | | A | B | C | D | E | F | A | B | C | D | E |
| Drive Current | | | 180mA | 300mA | 520mA | 740mA | 1100mA | 1500mA | 800mA | 1250mA | 1700mA | 1130mA | 1500mA |
| Nominal Power (Watts) | | | 6 | 9 | 17 | 25 | 38 | 54 | 26 | 41 | 57 | 78 | 107 |
| Input Current @ 120V (A) | | | 0.040 | 0.079 | 0.145 | 0.218 | 0.328 | 0.465 | 0.224 | 0.353 | 0.494 | 0.640 | 0.875 |
| Input Current @ 208V (A) | | | 0.025 | 0.048 | 0.085 | 0.127 | 0.189 | 0.264 | 0.131 | 0.203 | 0.280 | 0.367 | 0.498 |
| Input Current @ 240V (A) | | | 0.023 | 0.044 | 0.075 | 0.112 | 0.165 | 0.230 | 0.115 | 0.176 | 0.243 | 0.320 | 0.432 |
| Input Current @ 277V (A) | | | 0.021 | 0.041 | 0.067 | 0.099 | 0.144 | 0.200 | 0.102 | 0.154 | 0.212 | 0.280 | 0.375 |
| Input Current @ 347V (A) | | | n/a | n/a | 0.056 | 0.076 | 0.112 | 0.156 | 0.079 | 0.121 | 0.166 | 0.219 | 0.300 |
| Input Current @ 480V (A) | | | n/a | n/a | 0.045 | 0.058 | 0.083 | 0.114 | 0.060 | 0.089 | 0.121 | 0.160 | 0.217 |
| CCT/ CRI | Optics | | PB1A | PB1B | PB1C | PB1D | PB1E | PB1F | PB2A | PB2B | PB2C | PB2D | PB2E |
| 80 CRI 2700K CCT | T1 | Lumens | 686 | 1,335 | 2,292 | 3,253 | 4,601 | 5,940 | 3,737 | 5,667 | 7,398 | 9,256 | 11,421 |
| | | Lumens per Watt | 143 | 144 | 135 | 127 | 119 | 109 | 141 | 136 | 127 | 121 | 109 |
| | | BUG Rating | B0-U0-G0 | B1-U0-G1 | B1-U0-G1 | B1-U0-G1 | B2-U0-G2 | B2-U0-G2 | B1-U0-G1 | B2-U0-G2 | B2-U0-G2 | B3-U0-G3 | B3-U0-G3 |
| | T2R | Lumens | 661 | 1,286 | 2,208 | 3,133 | 4,432 | 5,721 | 3,600 | 5,458 | 7,126 | 8,915 | 11,000 |
| | | Lumens per Watt | 138 | 138 | 130 | 122 | 115 | 105 | 136 | 131 | 122 | 117 | 105 |
| | | BUG Rating | B0-U0-G0 | B0-U0-G0 | B1-U0-G1 | B1-U0-G1 | B1-U0-G1 | B1-U0-G1 | B1-U0-G1 | B1-U0-G1 | B2-U0-G2 | B2-U0-G2 | B2-U0-G2 |
| | T2U | Lumens | 654 | 1,273 | 2,185 | 3,100 | 4,385 | 5,661 | 3,562 | 5,400 | 7,050 | 8,821 | 10,884 |
| | | Lumens per Watt | 136 | 137 | 129 | 121 | 113 | 104 | 134 | 129 | 121 | 116 | 104 |
| | | BUG Rating | B0-U0-G0 | B1-U0-G1 | B1-U0-G1 | B1-U0-G1 | B1-U0-G1 | B1-U0-G1 | B1-U0-G1 | B1-U0-G1 | B2-U0-G2 | B2-U0-G2 | B2-U0-G2 |
| | T3 | Lumens | 651 | 1,268 | 2,176 | 3,088 | 4,368 | 5,640 | 3,548 | 5,380 | 7,024 | 8,787 | 10,843 |
| | | Lumens per Watt | 136 | 136 | 128 | 121 | 113 | 103 | 134 | 129 | 121 | 115 | 104 |
| | | BUG Rating | B0-U0-G0 | B0-U0-G0 | B1-U0-G1 | B1-U0-G1 | B1-U0-G1 | B1-U0-G1 | B1-U0-G1 | B1-U0-G1 | B1-U0-G2 | B2-U0-G2 | B2-U0-G2 |
| | T4W | Lumens | 632 | 1,230 | 2,111 | 2,995 | 4,237 | 5,470 | 3,441 | 5,218 | 6,812 | 8,522 | 10,516 |
| | | Lumens per Watt | 132 | 132 | 124 | 117 | 109 | 100 | 130 | 125 | 117 | 112 | 100 |
| | | BUG Rating | B0-U0-G0 | B0-U0-G1 | B1-U0-G1 | B1-U0-G1 | B1-U0-G1 | B1-U0-G1 | B1-U0-G1 | B1-U0-G1 | B1-U0-G2 | B2-U0-G2 | B2-U0-G2 |
| 80 CRI 3000K CCT | T1 | Lumens | 713 | 1,387 | 2,382 | 3,380 | 4,780 | 6,172 | 3,883 | 5,887 | 7,686 | 9,616 | 11,866 |
| | | Lumens per Watt | 148 | 149 | 140 | 132 | 124 | 113 | 147 | 141 | 132 | 126 | 113 |
| | | BUG Rating | B0-U0-G0 | B1-U0-G1 | B1-U0-G1 | B1-U0-G1 | B2-U0-G2 | B2-U0-G2 | B2-U0-G2 | B2-U0-G2 | B2-U0-G2 | B3-U0-G3 | B3-U0-G3 |
| | T2R | Lumens | 686 | 1,336 | 2,294 | 3,255 | 4,604 | 5,944 | 3,740 | 5,670 | 7,403 | 9,262 | 11,428 |
| | | Lumens per Watt | 143 | 144 | 135 | 127 | 119 | 109 | 141 | 136 | 127 | 122 | 109 |
| | | BUG Rating | B0-U0-G0 | B0-U0-G0 | B1-U0-G1 | B1-U0-G1 | B1-U0-G1 | B1-U0-G1 | B1-U0-G1 | B1-U0-G1 | B2-U0-G2 | B2-U0-G2 | B2-U0-G2 |
| | T2U | Lumens | 679 | 1,322 | 2,270 | 3,221 | 4,556 | 5,881 | 3,700 | 5,611 | 7,325 | 9,164 | 11,308 |
| | | Lumens per Watt | 142 | 142 | 134 | 126 | 118 | 108 | 140 | 134 | 126 | 120 | 108 |
| | | BUG Rating | B0-U0-G0 | B1-U0-G1 | B1-U0-G1 | B1-U0-G1 | B1-U0-G1 | B2-U0-G2 | B1-U0-G1 | B1-U0-G1 | B2-U0-G2 | B2-U0-G2 | B2-U0-G2 |
| | T3 | Lumens | 677 | 1,317 | 2,261 | 3,208 | 4,538 | 5,859 | 3,686 | 5,589 | 7,297 | 9,129 | 11,265 |
| | | Lumens per Watt | 141 | 142 | 133 | 125 | 117 | 108 | 139 | 134 | 125 | 120 | 108 |
| | | BUG Rating | B0-U0-G0 | B0-U0-G0 | B1-U0-G1 | B1-U0-G1 | B1-U0-G1 | B1-U0-G1 | B1-U0-G1 | B1-U0-G1 | B1-U0-G2 | B2-U0-G2 | B2-U0-G2 |
| | T4W | Lumens | 656 | 1,277 | 2,193 | 3,112 | 4,401 | 5,682 | 3,575 | 5,421 | 7,077 | 8,854 | 10,925 |
| | | Lumens per Watt | 137 | 137 | 129 | 122 | 114 | 104 | 135 | 130 | 122 | 116 | 104 |
| | | BUG Rating | B0-U0-G0 | B0-U0-G1 | B1-U0-G1 | B1-U0-G1 | B1-U0-G1 | B1-U0-G1 | B1-U0-G1 | B1-U0-G1 | B1-U0-G2 | B2-U0-G2 | B2-U0-G2 |

| Number of Light Squares | | | 1 Square (PB1) | | | | | | 2 Squares (PB2) | | | | |
|---|---|---|---|---|---|---|---|---|---|---|---|---|---|
| Output Level | | | A | B | C | D | E | F | A | B | C | D | E |
| Drive Current | | | 180mA | 300mA | 520mA | 740mA | 1100mA | 1500mA | 800mA | 1250mA | 1700mA | 1130mA | 1500mA |
| Nominal Power (Watts) | | | 6 | 9 | 17 | 25 | 38 | 54 | 26 | 41 | 57 | 78 | 107 |
| Input Current @ 120V (A) | | | 0.040 | 0.079 | 0.145 | 0.218 | 0.328 | 0.465 | 0.224 | 0.353 | 0.494 | 0.640 | 0.875 |
| Input Current @ 208V (A) | | | 0.025 | 0.048 | 0.085 | 0.127 | 0.189 | 0.264 | 0.131 | 0.203 | 0.280 | 0.367 | 0.498 |
| Input Current @ 240V (A) | | | 0.023 | 0.044 | 0.075 | 0.112 | 0.165 | 0.230 | 0.115 | 0.176 | 0.243 | 0.320 | 0.432 |
| Input Current @ 277V (A) | | | 0.021 | 0.041 | 0.067 | 0.099 | 0.144 | 0.200 | 0.102 | 0.154 | 0.212 | 0.280 | 0.375 |
| Input Current @ 347V (A) | | | n/a | n/a | 0.056 | 0.076 | 0.112 | 0.156 | 0.079 | 0.121 | 0.166 | 0.219 | 0.300 |
| Input Current @ 480V (A) | | | n/a | n/a | 0.045 | 0.058 | 0.083 | 0.114 | 0.060 | 0.089 | 0.121 | 0.160 | 0.217 |
| CCT/ CRI | Optics | | PB1A | PB1B | PB1C | PB1D | PB1E | PB1F | PB2A | PB2B | PB2C | PB2D | PB2E |
| 80 CRI 3500K CCT | T1 | Lumens | 724 | 1,409 | 2,419 | 3,433 | 4,856 | 6,270 | 3,944 | 5,981 | 7,808 | 9,769 | 12,054 |
| | | Lumens per Watt | 151 | 152 | 142 | 134 | 125 | 115 | 149 | 143 | 134 | 128 | 115 |
| | | BUG Rating | B0-U0-G0 | B1-U0-G1 | B1-U0-G1 | B1-U0-G1 | B2-U0-G2 | B2-U0-G2 | B2-U0-G2 | B2-U0-G2 | B3-U0-G3 | B3-U0-G3 | B3-U0-G3 |
| | T2R | Lumens | 697 | 1,357 | 2,330 | 3,307 | 4,677 | 6,038 | 3,799 | 5,760 | 7,520 | 9,409 | 11,610 |
| | | Lumens per Watt | 145 | 146 | 137 | 129 | 121 | 111 | 143 | 138 | 129 | 123 | 111 |
| | | BUG Rating | B0-U0-G0 | B0-U0-G0 | B1-U0-G1 | B1-U0-G1 | B1-U0-G1 | B1-U0-G1 | B1-U0-G1 | B1-U0-G1 | B2-U0-G2 | B2-U0-G2 | B2-U0-G2 |
| | T2U | Lumens | 690 | 1,343 | 2,306 | 3,272 | 4,628 | 5,975 | 3,759 | 5,700 | 7,441 | 9,310 | 11,487 |
| | | Lumens per Watt | 144 | 144 | 136 | 128 | 120 | 110 | 142 | 136 | 128 | 122 | 110 |
| | | BUG Rating | B0-U0-G0 | B1-U0-G1 | B1-U0-G1 | B1-U0-G1 | B1-U0-G1 | B2-U0-G2 | B1-U0-G1 | B1-U0-G1 | B2-U0-G2 | B2-U0-G2 | B3-U0-G3 |
| | T3 | Lumens | 687 | 1,338 | 2,297 | 3,259 | 4,610 | 5,952 | 3,745 | 5,678 | 7,413 | 9,274 | 11,444 |
| | | Lumens per Watt | 143 | 144 | 135 | 127 | 119 | 109 | 141 | 136 | 127 | 122 | 109 |
| | | BUG Rating | B0-U0-G0 | B0-U0-G0 | B1-U0-G1 | B1-U0-G1 | B1-U0-G1 | B1-U0-G1 | B1-U0-G1 | B1-U0-G1 | B1-U0-G2 | B2-U0-G2 | B2-U0-G2 |
| | T4W | Lumens | 667 | 1,298 | 2,228 | 3,161 | 4,471 | 5,773 | 3,632 | 5,507 | 7,189 | 8,995 | 11,099 |
| | | Lumens per Watt | 139 | 140 | 131 | 123 | 116 | 106 | 137 | 132 | 124 | 118 | 106 |
| | | BUG Rating | B0-U0-G0 | B0-U0-G1 | B1-U0-G1 | B1-U0-G1 | B1-U0-G1 | B1-U0-G1 | B1-U0-G1 | B1-U0-G1 | B1-U0-G2 | B2-U0-G2 | B2-U0-G2 |
| 80 CRI 4000K CCT | T1 | Lumens | 748 | 1,455 | 2,498 | 3,544 | 5,014 | 6,473 | 4,072 | 6,175 | 8,061 | 10,085 | 12,445 |
| | | Lumens per Watt | 156 | 156 | 147 | 138 | 130 | 119 | 154 | 148 | 139 | 132 | 119 |
| | | BUG Rating | B0-U0-G0 | B1-U0-G1 | B1-U0-G1 | B1-U0-G1 | B2-U0-G2 | B2-U0-G2 | B2-U0-G2 | B2-U0-G2 | B3-U0-G3 | B3-U0-G3 | B3-U0-G3 |
| | T2R | Lumens | 720 | 1,401 | 2,406 | 3,414 | 4,829 | 6,234 | 3,922 | 5,947 | 7,764 | 9,714 | 11,986 |
| | | Lumens per Watt | 150 | 151 | 142 | 133 | 125 | 114 | 148 | 142 | 133 | 127 | 114 |
| | | BUG Rating | B0-U0-G0 | B1-U0-G1 | B1-U0-G1 | B1-U0-G1 | B1-U0-G1 | B1-U0-G1 | B1-U0-G1 | B1-U0-G1 | B2-U0-G2 | B2-U0-G2 | B2-U0-G2 |
| | T2U | Lumens | 712 | 1,387 | 2,380 | 3,378 | 4,778 | 6,168 | 3,881 | 5,884 | 7,682 | 9,611 | 11,860 |
| | | Lumens per Watt | 148 | 149 | 140 | 132 | 123 | 113 | 146 | 141 | 132 | 126 | 113 |
| | | BUG Rating | B0-U0-G0 | B1-U0-G1 | B1-U0-G1 | B1-U0-G1 | B1-U0-G1 | B2-U0-G2 | B1-U0-G1 | B2-U0-G2 | B2-U0-G2 | B2-U0-G2 | B3-U0-G3 |
| | T3 | Lumens | 710 | 1,381 | 2,371 | 3,365 | 4,760 | 6,145 | 3,866 | 5,862 | 7,653 | 9,575 | 11,815 |
| | | Lumens per Watt | 148 | 149 | 139 | 131 | 123 | 113 | 146 | 140 | 131 | 126 | 113 |
| | | BUG Rating | B0-U0-G0 | B0-U0-G0 | B1-U0-G1 | B1-U0-G1 | B1-U0-G1 | B1-U0-G1 | B1-U0-G1 | B1-U0-G1 | B1-U0-G2 | B2-U0-G2 | B2-U0-G2 |
| | T4W | Lumens | 688 | 1,340 | 2,300 | 3,264 | 4,616 | 5,960 | 3,750 | 5,685 | 7,422 | 9,286 | 11,458 |
| | | Lumens per Watt | 143 | 144 | 135 | 127 | 119 | 109 | 141 | 136 | 128 | 122 | 109 |
| | | BUG Rating | B0-U0-G0 | B0-U0-G1 | B1-U0-G1 | B1-U0-G1 | B1-U0-G1 | B1-U0-G1 | B1-U0-G1 | B1-U0-G1 | B1-U0-G2 | B2-U0-G2 | B2-U0-G2 |

| Number of Light Squares | | | 1 Square (PB1) | | | | | | 2 Squares (PB2) | | | | |
|---|---|---|---|---|---|---|---|---|---|---|---|---|---|
| Output Level | | | A | B | C | D | E | F | A | B | C | D | E |
| Drive Current | | | 180mA | 300mA | 520mA | 740mA | 1100mA | 1500mA | 800mA | 1250mA | 1700mA | 1130mA | 1500mA |
| Nominal Power (Watts) | | | 6 | 9 | 17 | 25 | 38 | 54 | 26 | 41 | 57 | 78 | 107 |
| Input Current @ 120V (A) | | | 0.040 | 0.079 | 0.145 | 0.218 | 0.328 | 0.465 | 0.224 | 0.353 | 0.494 | 0.640 | 0.875 |
| Input Current @ 208V (A) | | | 0.025 | 0.048 | 0.085 | 0.127 | 0.189 | 0.264 | 0.131 | 0.203 | 0.280 | 0.367 | 0.498 |
| Input Current @ 240V (A) | | | 0.023 | 0.044 | 0.075 | 0.112 | 0.165 | 0.230 | 0.115 | 0.176 | 0.243 | 0.320 | 0.432 |
| Input Current @ 277V (A) | | | 0.021 | 0.041 | 0.067 | 0.099 | 0.144 | 0.200 | 0.102 | 0.154 | 0.212 | 0.280 | 0.375 |
| Input Current @ 347V (A) | | | n/a | n/a | 0.056 | 0.076 | 0.112 | 0.156 | 0.079 | 0.121 | 0.166 | 0.219 | 0.300 |
| Input Current @ 480V (A) | | | n/a | n/a | 0.045 | 0.058 | 0.083 | 0.114 | 0.060 | 0.089 | 0.121 | 0.160 | 0.217 |
| CCT/ CRI | Optics | | PB1A | PB1B | PB1C | PB1D | PB1E | PB1F | PB2A | PB2B | PB2C | PB2D | PB2E |
| 80 CRI 5000K CCT | T1 | Lumens | 748 | 1,455 | 2,498 | 3,544 | 5,014 | 6,473 | 4,072 | 6,175 | 8,061 | 10,085 | 12,445 |
| | | Lumens per Watt | 156 | 156 | 147 | 138 | 130 | 119 | 154 | 148 | 139 | 132 | 119 |
| | | BUG Rating | B0-U0-G0 | B1-U0-G1 | B1-U0-G1 | B1-U0-G1 | B2-U0-G2 | B2-U0-G2 | B2-U0-G2 | B2-U0-G2 | B3-U0-G3 | B3-U0-G3 | B3-U0-G3 |
| | T2R | Lumens | 720 | 1,401 | 2,406 | 3,414 | 4,829 | 6,234 | 3,922 | 5,947 | 7,764 | 9,714 | 11,986 |
| | | Lumens per Watt | 150 | 151 | 142 | 133 | 125 | 114 | 148 | 142 | 133 | 127 | 114 |
| | | BUG Rating | B0-U0-G0 | B1-U0-G1 | B1-U0-G1 | B1-U0-G1 | B1-U0-G1 | B1-U0-G1 | B1-U0-G1 | B1-U0-G1 | B2-U0-G2 | B2-U0-G2 | B2-U0-G2 |
| | T2U | Lumens | 712 | 1,387 | 2,380 | 3,378 | 4,778 | 6,168 | 3,881 | 5,884 | 7,682 | 9,611 | 11,860 |
| | | Lumens per Watt | 148 | 149 | 140 | 132 | 123 | 113 | 146 | 141 | 132 | 126 | 113 |
| | | BUG Rating | B0-U0-G0 | B1-U0-G1 | B1-U0-G1 | B1-U0-G1 | B1-U0-G1 | B2-U0-G2 | B1-U0-G1 | B2-U0-G2 | B2-U0-G2 | B2-U0-G2 | B3-U0-G3 |
| | T3 | Lumens | 710 | 1,381 | 2,371 | 3,365 | 4,760 | 6,145 | 3,866 | 5,862 | 7,653 | 9,575 | 11,815 |
| | | Lumens per Watt | 148 | 149 | 139 | 131 | 123 | 113 | 146 | 140 | 131 | 126 | 113 |
| | | BUG Rating | B0-U0-G0 | B0-U0-G0 | B1-U0-G1 | B1-U0-G1 | B1-U0-G1 | B1-U0-G1 | B1-U0-G1 | B1-U0-G1 | B1-U0-G2 | B2-U0-G2 | B2-U0-G2 |
| | T4W | Lumens | 688 | 1,340 | 2,300 | 3,264 | 4,616 | 5,960 | 3,750 | 5,685 | 7,422 | 9,286 | 11,458 |
| | | Lumens per Watt | 143 | 144 | 135 | 127 | 119 | 109 | 141 | 136 | 128 | 122 | 109 |
| | | BUG Rating | B0-U0-G0 | B0-U0-G1 | B1-U0-G1 | B1-U0-G1 | B1-U0-G1 | B1-U0-G1 | B1-U0-G1 | B1-U0-G1 | B1-U0-G2 | B2-U0-G2 | B2-U0-G2 |

## Control Options

**0-10V** This fixture is offered standard with 0-10V dimming driver(s). Standard with 0-10V dimming wire leads for use with a lighting control panel or other control method.

**Photocontrol** (BPC) Optional button-type photocontrol (BPC) provides a flexible solution to enable “dusk-to-dawn” lighting by sensing light levels.

**Dimming Occupancy Sensor** (SPB, MS/DIM-LXX) These sensors are factory installed in the luminaire housing. When the SPB or MS/DIM sensor options are selected, the occupancy sensor is connected to a dimming driver and the entire luminaire dims when there is no activity detected. When activity is detected, the luminaire returns to full light output. The MS/DIM sensor is factory preset to dim down to approximately 50 percent power with a time delay of five minutes. SPB motion sensors require the Sensor Configuration mobile application by Wattstopper to change factory default dimming level, time delay, sensitivity and other parameters. Available for iOS and Android devices. The SPB sensor is factory preset to dim down to approximately 10% power with a time delay of five minutes. The MS/DIM occupancy sensors require the FSIR-100 programming tool to adjust factory defaults.

**For mounting heights up to 8'** (SPB1, -L08)

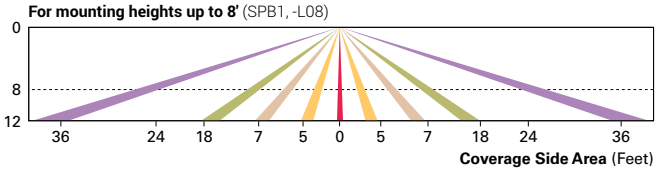


**For mounting heights up to 20'** (SPB2, -L20)

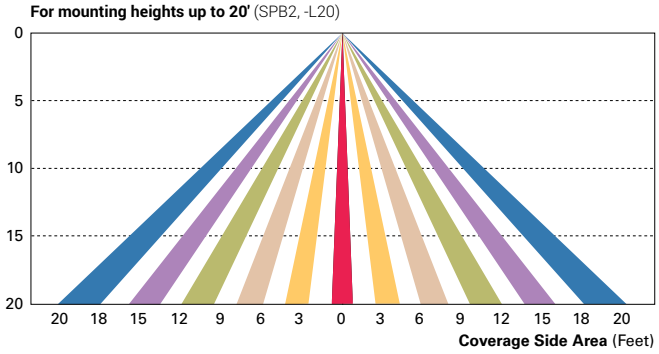


**WaveLinx Wireless Control and Monitoring System**

Operates on a wireless mesh network based on IEEE 802.15.4 standards enabling wireless control of outdoor lighting. WaveLinx (WPS2 to WPS4) outdoor wireless sensors offer passive infrared (PIR) occupancy and photocell for closed loop daylight harvesting. Sensors are factory preset to dim down to 50% after 15 minutes of no motion detected. Two lens options are available for mount[1]ing heights of 7′ to 40′. Use the WaveLinx mobile application for set-up and configuration. At least one Wireless Area Controller (WAC) is required for full functionality and remote communication (including adjustment of any factory pre-sets). WaveLinx Lite (WLS4 and WLS2) outdoor wireless sensors provide PIR occupancy and photocell for closed loop daylight harvesting. Sensors are factory preset to dim down to 50% after 15 minutes of no motion detected. Two lens options are available for mounting heights of 7′ to 40′. Use the WaveLinx Lite mobile application for set-up and configuration. WAC not required. The out-of-box functionality is ON at dusk and OFF at dawn.

**For mounting heights up to 15'** (WPS2 and WLS2)

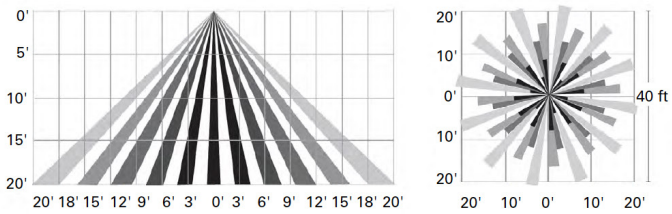


**For mounting heights up to 40'** (WPS4 and WLS4)

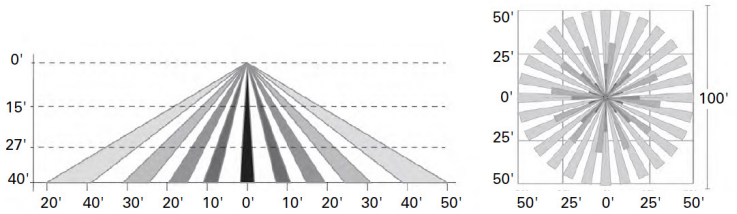




Cooper Lighting Solutions
1121 Highway 74 South
Peachtree City, GA 30269
P. 770-486-4800
www.cooperlighting.com

© 2025 Cooper Lighting Solutions
All Rights Reserved.

Specifications and dimensions
subject to change without notice.

Cottage Grove
Where Pride and Prosperity Meet

February 3, 2026

Nick Adam
Rehder & Associates, Inc.
3440 Federal Drive
Suite 110
Eagan, MN 55122

Dear Nick,

Below are comments on the engineering plans you submitted to the City of Cottage Grove on January 26, 2026. The plans reviewed were: 4638-New Life EFree Church_City Submittal_01.28.26.

General Comments:

1. Septic plans should be reviewed by the county.
2. No NPDES permit is required as the total disturbed area is less than 1 acre. A City of Cottage Grove grading permit will be required, available online here: Grading Permit | Cottage Grove, MN.
3. See attached review from MnDOT. This was forwarded to you on 1/13/26.

Sheet C1.

4. The city requires proof of well sealing be submitted. Please forward the well-sealing documentation to me.

Sheet C3

5. City freeboard rules state that the lowest adjacent grade must be 3 feet above a high water level. Since there are no survey shots on the north side of the existing church it is not possible to tell if this is met. LAG must be 881.73 or higher in order to meet the rule. Please provide LAG survey shots or edit grading to meet the rule.
6. Under Erosion Control Notes
    a. Note 2: please check MnDOT rules for sweeping highways. Consider changing note to state that no tracking onto Hwy 61 is allowed. Sweep driveway daily or as needed.
    b. Rock construction entrance is required. Detail is shown on Sheet C4 but its location is not shown on C3.
7. Show location of the new well and the water connection to the church.

Landscape Plan A01

8. Trees on north side of addition could potentially block swale to infiltration basin. Add proposed contours to this sheet to show that no drainage conflicts exist.

*(Reserved for Recording Data)*

# STORMWATER MANAGEMENT FACILITIES AGREEMENT

This Stormwater Management Facilities Agreement ("Agreement") is made, entered into and effective this ____ day of _____, 2026, by and between the City of Cottage Grove, a Minnesota municipal corporation ("City"), and New Life Community Church, a Minnesota non-profit corporation ("Developer").

**WHEREAS**, Developer is the fee owner of certain real property situated in the City of Cottage Grove, County of Washington, State of Minnesota legally described as follows:

> The North one-half (N 1/2) of the North one-half (N 1/2) of the Southwest Quarter (SW 1/4) of the Northwest Quarter (NW 1/4) of Section Thirty-six (36), Township Twenty-seven (27), Range Twenty-one (21), except State Trunk Highway No. 61 as now established.
>
> *Torrens Property Certificate 26867*
> PID: 36.027.21.23.0002

(the "Property"); and

**WHEREAS**, Developer has obtained the approval of the City for the development of the Property for Stormwater Management Facilities; and

**WHEREAS**, as used herein, the term "Stormwater Management Facilities" may refer to water quality and/or water quantity facilities (i.e. detention basins, retention basins, swales, pipes, oil/water separators, sand filtering devices, infiltration facilities, sump structures, etc.) which are located outside the public road right-of-way; and

**WHEREAS**, the City has required that the Developer make provision for the construction, maintenance and repair of the Stormwater Management Facilities located within the boundaries of

the Property pursuant the constructions plans approved by the City Engineer and on file with the City ("Plans"); and

**WHEREAS**, the City and Developer desire to set forth their understanding with respect to the construction, repair and maintenance of the Stormwater Management Facilities and the responsibility relating to the costs of the repair and maintenance of the Stormwater Management Facilities.

**NOW THEREFORE**, in consideration of the foregoing facts and circumstances, and for other good and valuable consideration, the receipt and sufficiency of which is hereby acknowledged, the parties hereto hereby agree as follows:

1. Construction and Maintenance of Stormwater Management Facilities. The Developer agrees to construct the Stormwater Management Facilities according to the Plans and repair and maintain the Stormwater Management Facilities at its sole cost and expense. Maintenance of the Stormwater Management Facilities shall mean (i) monthly inspections and, if necessary, removal of all litter, debris, sediment, and replacement of mulch, vegetation, and eroded areas to ensure establishment of healthy functioning plant life therein; and (ii) an annual inspection, and certification, by a qualified individual or company acceptable to the City that the Stormwater Management Facilities are functioning in accordance with the approved Plans and have maintained the proper operation of the stormwater treatment as Stormwater Management Facilities according to the City Standards. If, as a result of an inspection by a qualified individual or company acceptable to the City or City staff, it is determined that the Stormwater Management Facilities (1) have not been maintained; or (2) are not functioning as originally designed and intended; or (3) are in need of repair, the Developer agrees to restore the Stormwater Management Facilities so that it functions as it was designed and intended. The Developer further agrees that they will not use any of the Stormwater Management Facilities for snow storage and will inform its snow removal contractors of this provision of the Agreement.

Subject to Section 5 below, Developer shall be solely responsible for the repair and maintenance of the Stormwater Management Facilities and shall provide a copy of the required annual inspection report to the City. If the required annual inspection report is not submitted to the City by September 30th of each year, the Developer shall provide the City with the right to enter onto the property to conduct the annual inspection.

2. Developer's Default. In the event of default by the Developer as to any of the work to be performed by it hereunder, following at least thirty (30) days prior written notice and Developer's failure to cure such default within such time-frame, except in an emergency as determined by the City, the City may, at its option, perform the work and the Developer shall promptly, following receipt of an invoice and reasonable substantiation of such costs, reimburse the City for any reasonable out-of-pocket expense incurred by the City. This Agreement is a license for the City to act when so authorized under this Agreement, and it shall not be necessary for the City to seek a Court order for permission to enter the Property. When the City does any such work, the City may, in addition to its other remedies, assess the reasonable out-of-pocket cost in whole or in part.

3. Future City Policy. Notwithstanding anything contained in this Agreement to the contrary, in the event the City shall in the future establish a policy for repair and maintenance by the City of stormwater ponds owned by private parties located elsewhere in the City under which policy the costs of such repair and maintenance are to be paid either out of general City revenues or by collection of utility or service fees or charges, then any owner of any portion of the Property shall be entitled to petition the City for the inclusion of an infiltration basin under such repair and maintenance program. The recording of a certified copy of the Resolution of the City Council of the City which sets forth the consent and authorization described in the foregoing sentence shall serve to terminate this Agreement, without further action on the part of any party hereto.

4. Changes to Site Configuration or Stormwater Management Facilities. If site configurations or Stormwater Management Facilities change, causing decreased effectiveness of Stormwater Management Facilities, new or improved Stormwater Management Facilities must be implemented to ensure the conditions for post-construction stormwater management continue to be met.

5. Terms and Conditions. This Agreement shall run with the land and shall be binding upon Developer's successors and assigns with respect to the Property. The terms and conditions of this Agreement shall be binding upon and shall insure to the benefit of the parties hereto and their respective successors and assigns.

6. Developer Warranty. Developer warrants and represents the following to the City and acknowledges that this Agreement has been duly executed and delivered and constitutes the legal, valid and binding obligation of Developer enforceable in accordance with its terms. The party signing on behalf of the Developer has been duly authorized by the entity to sign the Agreement and bind the entity. Developer has been duly formed under the laws of the State of Minnesota and is in good standing under the laws of the jurisdiction in which the Property is located, is duly qualified to transact business in the jurisdiction in which the Property is located, and has the requisite power and authority to enter into and perform this Agreement and the documents and instruments required to be executed and delivered by Developer pursuant hereto. This Agreement and the documents and instruments required to be executed and delivered by Developer pursuant hereto have each been duly authorized by all necessary action on the part of Developer and such execution, delivery and performance does and will not conflict with or result in a violation of Developer's organizational agreement or any judgment or order. The execution, delivery and performance by Developer of this Agreement will not (a) violate any provision of any law, statute, rule or regulation or any order, writ, judgment, injunction, decree, determination or award of any court, governmental agency or arbitrator presently in effect having applicability to Developer, or (b) result in a breach of or constitute a default under any indenture, loan or credit agreement or any other agreement, lease or instrument to which Developer is a party or by which it or any of its properties may be bound.

7. Amendment and Waiver. The parties hereto may by mutual written agreement amend this Agreement in any respect. Any party hereto may extend the time for the performance of any of the obligations of another, waive any inaccuracies in representations by another contained in this Agreement or in any document delivered pursuant hereto which inaccuracies would otherwise constitute a breach of this Agreement, waive compliance by another with any of the covenants contained in this Agreement, waive performance of any obligations by the other or

waive the fulfillment of any condition that is precedent to the performance by the party so waiving of any of its obligations under this Agreement. Any agreement on the part of any party for any such amendment, extension or waiver must be in writing. No waiver of any of the provisions of this Agreement shall be deemed, or shall constitute, a waiver of any other provisions, whether or not similar, nor shall any waiver constitute a continuing waiver.

8. Governing Law. This Agreement shall be governed by and construed in accordance with the laws of the State of Minnesota.

9. Counterparts. This Agreement may be executed in any number of counterparts, each of which shall be deemed an original but all of which shall constitute one and the same instrument.

10. Consent. Developer consents to the recording of this Agreement.

11. Limitation of Liability. Notwithstanding any other provision of this Agreement, in no event shall either party or any of their affiliates, by reason of any of their respective acts or omissions be liable whether in contract, tort, misrepresentation, warranty, negligence, strict liability or otherwise for any special, indirect, incidental or consequential damages arising out of or in connection with this Agreement, or the performance, non-performance or breach thereof.

12. Notice. Notice shall mean notices given by one party to the other if in writing and if and when delivered or tendered: (i) in person; (ii) by depositing it in the United States mail in a sealed envelope, by certified mail, return receipt requested, with postage and postal charges prepaid, or (iii) by proper and timely delivery to an overnight courier service addressed by name and address to the party or person intended addressed as follows:

| | |
|---|---|
| If to City: | City of Cottage Grove<br>Attention: City Administrator<br>12800 Ravine Parkway South<br>Cottage Grove, MN 55016 |
| If to Developer: | New Life Community Church<br>11245 Point Douglas Dr S<br>Cottage Grove, MN 55016 |

or to such other address as the party addressed shall have previously designated by notice given in accordance with this Section. Notices shall be deemed to have been duly given on the date of service if served personally on the party to whom notice is to be given, on the third day after mailing if mailed by United States postal service as provided above, or within twenty-four (24) hours if sent via overnight courier service provided, that a notice not given as above shall, if it is in writing, be deemed given if and when actually received by a party.

**[The remainder of this page was intentionally left blank.]**

**IN WITNESS WHEREOF**, the parties hereto have caused this document to be executed as of the day and year first above written.

**CITY:**
**CITY OF COTTAGE GROVE**

By:_____
Myron Bailey
Its Mayor

By:_____
Tamara Anderson
Its City Clerk

STATE OF MINNESOTA )
) ss.
COUNTY OF WASHINGTON )

On this _____ day of _____, 2026, before me a Notary Public within and for said County, personally appeared Myron Bailey and Tamara Anderson to me personally known, who being each by me duly sworn, each did say that they are respectively the Mayor and City Clerk of the City of Cottage Grove, the municipality named in the foregoing instrument, and that the said instrument was signed in behalf of said municipality by authority of its City Council and said Mayor and City Clerk acknowledged said instrument to be the free act and deed of said municipality.

_____
Notary Public

**DEVELOPER:**
**NEW LIFE COMMUNITY CHURCH**

By: _____

_____

Its _____

STATE OF MINNESOTA )
) ss.
COUNTY OF _____)

On this _____ day of _____, 2026, before me a Notary Public within and for said County, personally appeared _____ to me personally known, who being by me duly sworn, did say that he is the _____ of New Life Community Church, a Minnesota non-profit corporation , the entity named in the foregoing instrument, and that said instrument was signed on behalf of said corporation.

_____
Notary Public

**This instrument drafted by**
**And after recording, please return to:**
Korine L. Land (#262432)
LeVander, Gillen & Miller, P.A.
1305 Corporate Center Drive, Suite 300
Eagan, MN 55121

# City Council Action Request

# 13.A.

| | |
|---|---|
| **Meeting Date** | 3/4/2026 |
| **Department** | Community Development |
| **Agenda Category** | Resolution |
| **Title** | Ordinance Amendments Workshop - Code Updates |
| **Staff Recommendation** | Provide direction on proposed code updates. |
| **Budget Implication** | N/A |

**Attachments**

| | |
|---|---|
| 1. | Code Update CC Memo |
| 2. | Property Maintenance Ordinance Updates CC Memo |

Cottage Grove
Where Pride and Prosperity Meet

**TO:** Honorable Mayor and City Council
Jennifer Levitt, City Administrator

**FROM:** Samantha Pierret, Senior Planner

**DATE:** February 25, 2026

**RE:** 2026 Code Updates

---

## Introduction

The City of Cottage Grove is requesting to amend sections of City Code Title 11, Zoning Regulations as part of annual code updates to ensure the Code stays up to date with current planning and zoning practices and to correct any discrepancies.

## Background

The City of Cottage Grove previously adopted an entirely revised zoning code in December 2022. Since its implementation, city staff has identified sections of the code that required minor corrections and clarifying language to ensure clarity in interpretation.

***Zoning Code Update***
Several of the proposed amendments are administrative and formatting; however, the more substantial amendments with findings of support are listed below:

1. Add definitions for Brewery and Taproom and move definitions for Brewpub, Microdistillery, and Cocktail Room from Historic Conditional Use Permit section to Definitions section.

    - 11-8-2: Allow Breweries and Microdistilleries as conditional uses in the Planned-Business District. Allow Brewpubs, Cocktail Rooms, and Taprooms as permitted uses in the Planned Business District.
    - 11-9-2: Allow Breweries and Microdistilleries as conditional uses in the I-1 and I-2 Districts. Allow Brewpubs, Cocktail Rooms, and Taprooms as conditional uses in the I-1 District.

    **Finding:** Currently breweries and distilleries are only allowed as a conditional use in the I-1 district and are permitted in the I-2 district. These terms are undefined in the Code. There may be interest in opening brewpub, brewery, or distillery establishments in the Industrial district; however, these terms must be defined and brewpubs and cocktail rooms allowed outside of historic properties. Brewpubs, Taprooms, and Cocktail Rooms incorporate a restaurant component. Restaurants without drive-up windows are permitted uses in all Business Districts.

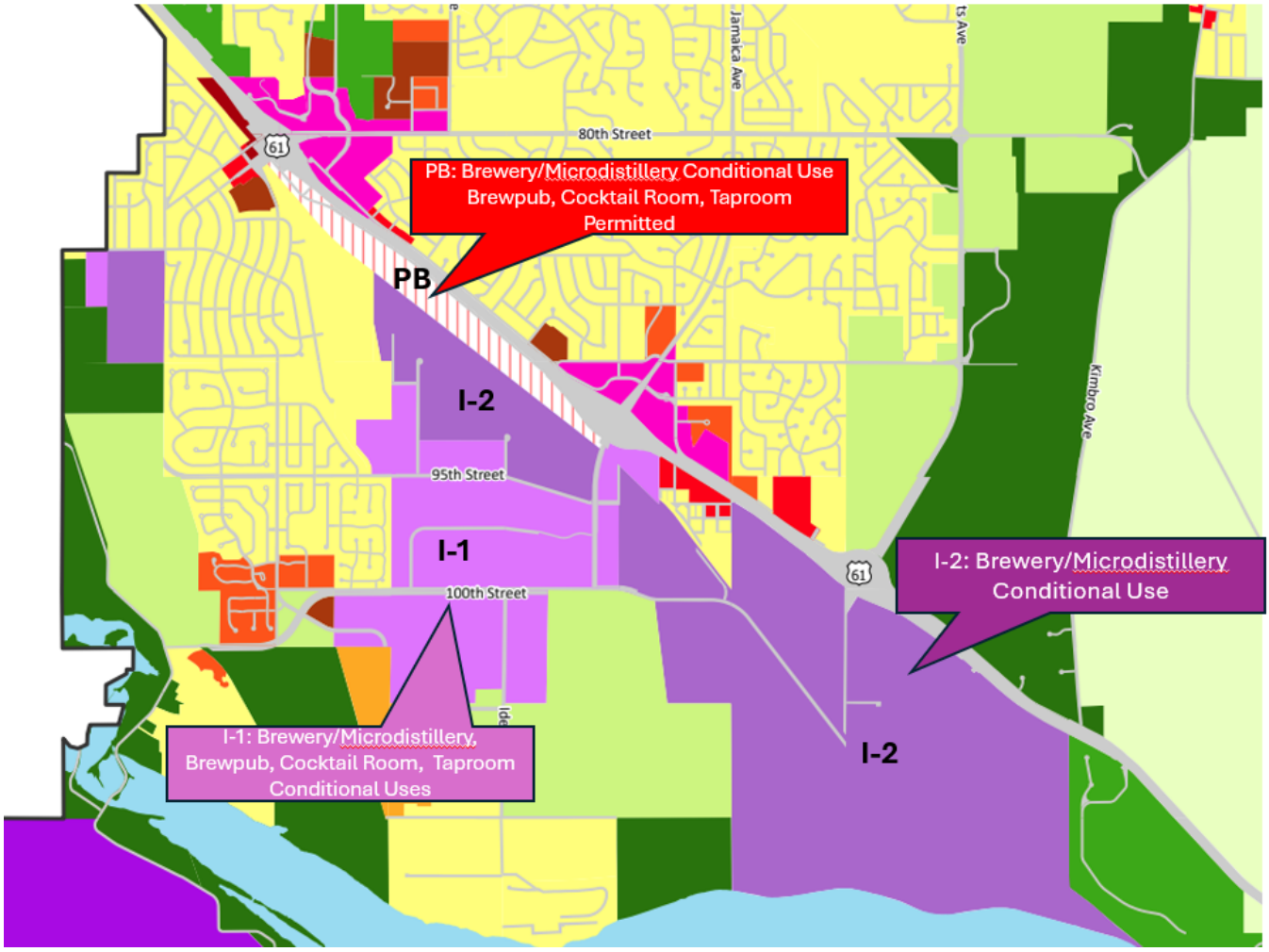


2. Add Title 11-2-11 creating Zoning Permits: A Zoning Permit would be reviewed and approved administratively by Planning staff for uses that are not intended to run with the land, unlike an Administrative Conditional Use Permit. A Zoning Permit application fee will be added to the Fee Table and Applicants must include an end date for uses such as Temporary Accessory Outdoor Sales (fireworks, garden sales, etc.). Zoning Permits are also proposed to be used for temporary buildings for construction purposes that will be removed upon completion of construction.

   - **Finding:** Conditional Uses (including those administratively approved) run with the land. For Temporary Accessory Outdoor Sales, past practices included approving an Administrative CUP for 5 years at a time; however, CUPs cannot have expiration dates. The proposed Zoning Permit process would require application annually, and the Applicant must identify an end date for the use.

3. Amend definitions and permitting processes for Temporary Accessory Outdoor Sales (fireworks, garden centers, Christmas trees, etc. in a tent or other temporary structure on the premises) and Outdoor Sales Displays (flowers, softener salt, mulch, etc. against the principal building): Temporary Accessory Outdoor Sales would be permitted via a “Zoning Permit” instead of Conditional or Interim Use Permit. Outdoor Sales Displays would be allowed as an Accessory Use in all business districts.

- 11-1-3: Add definition *Temporary Accessory Outdoor Sales*. This term was already used in the Code but was undefined and includes firework sales, seasonal landscape tents, etc.
- 11-1-3: Amend definition for Outdoor Seasonal Sales to Outdoor Sales Displays. These are more permanent sales displays such as softener salt, firewood, or mulch up against the principal building.
- 11-4-17: Change title of section to Outdoor Sales Displays. All of the performance standards will stay the same.
- Add new Title 11-4-19, Temporary Accessory Outdoor Sales. Add performance standards including maximum square footage and setbacks.

**Finding:** There is a difference between outdoor sales that take place year-round on a property versus temporary sale events in parking lots such as nurseries or fireworks and these differences should be found in the code.

**Outdoor Sales Display – Accessory Use**

**Outdoor Sales Display – Accessory Use**

**Temporary Accessory Outdoor Sales – Zoning Permit**

**Temporary Accessory Outdoor Sales – Zoning Permit**

4. 11-3-4H: Add parking requirements for retail centers. A definition will be added for retail centers which are commercial areas containing one or more retail, office, and/or restaurant establishments within a connected structure with a separate exterior entrance serving each establishment.

   - One parking space per 200 square feet of the retail center shall be required.

**Finding:** It is not practical to determine parking requirements for retail centers based on individual uses, particularly if a use changes. The proposed language would require a number of spaces based on the total square footage of the building that will not change as uses come and go.

5. 11-3-5: Amend accessory building height to be no more than two feet taller than the principal structure or maximum accessory building height, whichever is greater.

**Finding:** Dwellings in the Thompson Grove neighborhoods were constructed as one-story ramblers to 13 or 14 feet in height. When the maximum accessory building height is limited to the height of the principal structure, property owners in these neighborhoods are limited and unable to construct garages tall enough to store boats, RVs, or add an unfinished attic/loft area for additional storage. By allowing an extra two feet of height, property owners have better opportunity to store their items indoors, while not being detrimental to the aesthetics of the property when viewed from the road. Various examples are shown below.

**Approx. 15’ Tall Accessory Building – Approx. 14’ Tall House**

**17’10” Tall Accessory Building – Approx. 14’ Tall Home**

**Approx. 14.5' Tall Accessory Building – Approx. 14' Tall House**

6. 11-3-12B(3): Add clarification for clear view triangle obstructions. The clear view triangle is measured from where the impacted property line and corner side property line intersect and measured back 10 feet along both property lines. No fences, structures, or plant materials over 30 inches in height will be allowed in the clear view triangle and the city shall have the authority to order removal of vision obstructions located within the clear view triangle.

**Clear View Triangle Examples**

**Finding:** Fences and plantings can obstruct pedestrian crosswalks and intersections for vehicles. There is not clarity in the Code specifying that vegetation over 30 inches is not permitted in the clear view triangle.

**Fence at an Angle Outside Clear View Triangle**

**Fence In Clear View Triangle**

7. 11-7-4: Lower minimum lot width in R-4, Transitional Residential Zoning District, to 40 feet and amend side yard setbacks for 40-to-44-foot-wide lots to 5 feet for the dwelling and 5 feet for garage side. 45 foot or greater lots shall maintain the existing 7.5-foot house side yard setback and 5-foot garage side.

- As density requirements increase per the Met Council, narrower lots are often proposed by developers. Multiple developments in the City have been approved with 40-foot-wide lots and reduced side yard setbacks via PUD (Mississippi Landing, Settler's Bluff, proposed Ravara Trails).

8. 11-3-4: Amend parking lot setbacks in Mixed Use and Commercial Districts to 10 feet while maintaining a 20-foot setback from front property lines and when adjacent to residential districts.

   **Finding:** Code standards ensure parking lots within Mixed Use and Commercial districts are located behind a structure and pushed back from the right-of-way. With future redevelopment opportunities within the community, a 10-foot setback from rear and side lots lines for lots with two right-of-way frontages will allow for efficient site design and layout of these sites.

9. 7-2-4: Refine the Table of Driveway Dimensions to accurately reflect the built environment, allow for appropriate driveway widths for all vehicle types, and clarify minimum and maximum driveway widths at property lines within all zoning districts. The update table will differentiate between minimum and maximum driveway width of Residential (12'-28'), Commercial/Mixed Use (24'-32'), and Industrial (32'-55').

## Recommendation

That City Council discuss the proposed updates and provide direction.

**TO:** Honorable Mayor and City Council
Jennifer Levitt, City Administrator

**FROM:** Samantha Drewry, Code Enforcement Officer

**DATE:** February 25, 2026

**RE:** Ordinance Amendments – Property Maintenance

---

## Background

The goal of the code enforcement program in Cottage Grove is to maintain public health, safety, and welfare; preserve property values; and ensure that neighborhoods remain clean, safe, and visually appealing for all residents. Several ordinance updates have been identified to better align with operational efficiencies and evolving trends in housing and property maintenance.

## Discussion

***Trash Container Storage***

As part of ongoing efforts to improve code compliance and community satisfaction, staff is proposing a revision to the current residential trash container storage ordinance. The existing ordinance requires containers to be stored completely out of public view. This requires storage of trash containers within a garage or installation of a screening element to screen from public view.

The proposed code amendment would permit trash containers to be stored in view, provided they are positioned along the side plane of the home or garage. The photos below feature two properties located in Cottage Grove that would be in violation of the current ordinance; however, would be in compliance with the proposed ordinance.

Areas marked with a red “X” on the images below indicate placements that would not comply with the updated code, while those marked with a red circle show locations that would be considered compliant.

A review of ordinances from 17 peer cities across Minnesota indicates all cities regulate trash container placement; however, only three cities—Apple Valley, Chanhassen, and Woodbury—require containers to be stored completely out of public view. In contrast, the majority of cities permit containers to be placed behind the front setback line of the home, often requiring screening only when containers are in front of the home and emphasizing maintenance of the trash containers over strict placement.

Enforcement data from 2021 through 2025 indicates a steady increase in code cases involving trash container storage violations. Assuming each case requires only an initial inspection and one follow-up inspection—with no additional site visits, it is estimated that approximately 0.5 hours of staff time is required per code violation case. Based on this estimate, the total staff hours dedicated solely to resolving trash container violations in the past 5 years with a single letter response are as follows:

| Year | Total Cases | Cases that Include Trash Container Storage Violations | Staff Hours dedicated to Trash Container Violations |
|---|---|---|---|
| 2021 | 491 | 192 | 96 |
| 2022 | 318 | 114 | 57 |
| 2023 | 256 | 100 | 50 |
| 2024 | 613 | 344 | 172 |
| 2025 | 724 | 461 | 231 |

Amending the ordinance to allow trash containers to be stored in view along the side plane of the home or garage allows the City of Cottage Grove Code Enforcement Program to better utilize limited staff resources. The average 120 hours focused on trash container code violations alone could be redirected toward higher-priority initiatives, such as expanded proactive code enforcement in commercial, industrial, and residential zones and enhanced public outreach and education. The proposed ordinance amendment acknowledges the reality that many residents already store containers in these areas behind the front plane of their house or garage and would balance effective code compliance with operational efficiency.

Existing ordinances address trash accumulation stored outside of containers, miscellaneous items left at the curb, and other unsheltered storage throughout the property. These existing standards will continue to be enforced alongside the proposed changes to container placement.

***Snow Removal on Multi-Family Rental Properties***

Current city ordinances require snow removal from public sidewalks and right-of-way; however, it does not require removal from private property. An increase in concern from residents within the city's multi-family developments has been received indicating a failure to remove snow in a timely manner, creating a safety hazard for tenants and visitors, including slip and fall risks and limited accessibility for individuals with mobility challenges.

Several neighboring cities—such as Andover, Brooklyn Center, and Coon Rapids—already have ordinances in place that require snow removal for private multi-family properties, setting a clear expectation for property owners and managers. Establishing a similar standard in Cottage Grove would ensure safe and accessible walkways for all residents, reduce liability concerns, and promote proactive property maintenance during winter months.

| City | Ordinance Section | Common Requirements |
|---|---|---|
| Andover | 9-8A-4L | Multi-family owner responsible for snow and ice removal within 48 hours of cessation |
| Apple Valley | N/A | No requirements for multi-family rental properties |
| Blaine | N/A | No requirements for multi-family rental properties |
| Burnsville | N/A | No requirements for multi-family rental properties |
| Brooklyn Center | 12-303 | Multi-family owner responsible for snow and ice removal within 24 hours of cessation |
| Champlin | N/A | No requirements for multi-family rental properties |
| Chanhassen | N/A | No requirements for multi-family rental properties |
| Chaska | N/A | No requirements for multi-family rental properties |
| Coon Rapids | 12-915(2) | Multi-family owner responsible for snow and ice removal within 12 hours of cessation for 1 inch or more and 72 hours of cessation for three inches or more |
| Eagan | N/A | No requirements for multi-family rental properties |
| Eden Prairie | N/A | No requirements for multi-family rental properties |
| Inver Grove Heights | N/A | No requirements for multi-family rental properties |
| Lakeville | N/A | No requirements for multi-family rental properties |
| Minnetonka | N/A | No requirements for multi-family rental properties |
| Oakdale | N/A | No requirements for multi-family rental properties |
| Roseville | N/A | No requirements for multi-family rental properties |
| Woodbury | N/A | No requirements for multi-family rental properties |

***Diseased/Dead Trees***

The City of Cottage Grove's current ordinances state any tree on private property that is infected with a plant pest is a public nuisance. When a tree is confirmed to harbor a plant pest, the City has

the authority to require the property owner to remove the diseased tree. If the property owner fails to do so, the City may abate the nuisance directly and assess the associated costs back to the property.

In regard to dead trees, the City may require removal of any that poses the potential to cause harm, inconvenience, discomfort, damage, or injury to one or more individuals within the community.

Currently, the City assumes responsibility for abating diseased trees on private property when owners fail to comply with a removal order. This process creates significant challenges, including:

- Initial Financial Burden**:** The City incurs substantial upfront costs for tree removal, which can result in large outstanding debts when property owners do not reimburse promptly.
- Potential Liability and Restoration Costs: Performing abatement on private property exposes the City to liability for accidental damage to landscaping, structures, or other improvements, as well as the cost of restoring affected areas.
- Assessment Program: The City of Woodbury has implemented a Private Ash Tree Removal Assessment Program. More details can be found on their website: Private Ash Tree Removal Assessment Program | Woodbury, MN The program is funded by the general fund.

Addressing dead trees under the current ordinance also possesses several challenges. If the City chooses to abate dead trees on private property, there are two paths of removal. If the property owner voluntarily allows the City to remove a dead tree, it will likely cost between $5,000-$10,000, depending on the size of the tree, which will be assessed against the property owner's taxes. The City has to cover these upfront costs that are then reimbursed when the assessment is paid with the property taxes, which can be up to a year later or more. If the City did abatements for all dead trees on private property, we would need to establish a separate fund for these abatements, with hundreds of thousands of dollars reserved.

In the event the property owner did not voluntarily agree to remove and instead challenged the abatement, the City would have to initiate a district court action and obtain a court order to remove the dead tree. This can cost up to $50,000 or more in attorneys' fees.

To address these concerns, staff is proposing to amend the code language to better clarify when we can require the removal of dead trees on private property. The language amendment limits removal of dead trees to those that are causing a public nuisance, specifically causing "hurt, harm, inconvenience, discomfort, damage or injury to *a considerable number of members of the public.*"

***Residential Property Vehicle Maximum***

The proposed ordinance amendment is to increase the number of vehicles allowed to be stored outside on a residential property from four to six. This change is intended to better accommodate evolving household dynamics, particularly multi-generational homes where more than four licensed drivers may reside at a single address. All vehicles stored outdoors must still be compliant with other City codes, including remaining in operable condition, display current registration tabs, and be parked on an improved surface to maintain neighborhood standards and safety.

| City | Common Requirements |
|---|---|
| Andover | No vehicle limit |

| | |
|---|---|
| Apple Valley | No more than four vehicles per lawful dwelling unit may be parked or stored anywhere outside. Permit (annual) may be obtained for up to 6. |
| Blaine | No vehicle limit |
| Burnsville | No vehicle limit |
| Brooklyn Center | No vehicle limit |
| Champlin | No vehicle limit |
| Chanhassen | No vehicle limit |
| Chaska | No vehicle limit |
| Coon Rapids | No vehicle limit |
| Eagan | No vehicle limit |
| Eden Prairie | No vehicle limit |
| Inver Grove Heights | No vehicle limit |
| Lakeville | No vehicle limit |
| Minnetonka | No vehicle limit |
| Oakdale | No vehicle limit |
| Roseville | No vehicle limit |
| Woodbury | No vehicle limit |

## Recommendation

Staff recommends that the City Council discuss the proposed ordinance amendments and provide direction to staff.

# City Council Action Request

# 13.B.

| | |
|---|---|
| **Meeting Date** | 3/4/2026 |
| **Department** | Administration |
| **Agenda Category** | Action Item |
| **Title** | 2026 Mill and Overlay Improvements — 95th Street Lane Reallocation |
| **Staff Recommendation** | Receive information on the 95th Street Lane reallocation and provide feedback to staff. |
| **Budget Implication** | N/A |
| **Attachments** | 1. 2026MO 95th Lane Reallocation Council Workshop Memo 3-4 |

**To:** Honorable Mayor and City Council
Jennifer Levitt, City Administrator

**From:** Genevieve Tester EIT, Graduate Engineer

**Date:** March 2, 2026

**Re:** 2026 Mill and Overlay Improvements – 95th Street Lane Reallocation

---

## Background

95th Street, between Hadley Avenue and Jamaica Avenue, is currently striped as a four-lane roadway (two lanes in each direction) with no designated turn lanes. The east portion of this corridor serves industrial properties and experiences higher truck volumes, while the west portion is residential with higher pedestrian activity.

Four-to-three lane conversions, or "road diets," are used to improve pedestrian and vehicle safety. The City of Cottage Grove uses this shared-center-turn-lane design at:

- East Point Douglas Rd., from 90th St. to Jamaica Ave.
- East Point Douglas Rd., west of Hefner Ave.
- Hadley Ave. from 92nd St. to Hamlet Ave.
- 100th St. from Jamaica Ave. to Hemingway Ave.
- 105th St. from Ideal Ave. to Hadley Ave.
- Ideal Ave. from 100th St. to 105th St.

*Some of these corridors include added right-turn lanes where geometry allows.*

A road diet reconfigures a four-lane roadway into three lanes—striped shoulders, one through lane in each direction, and a center two-way left-turn lane. Figure 1 shows a typical plan-view comparison.

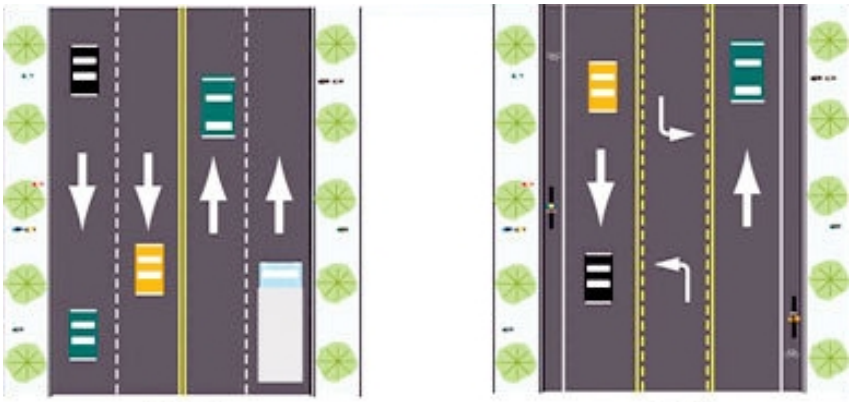

**Figure 1: Lane Reallocation—a four-lane roadway (left) versus a three-lane roadway (right)**

## Discussion

A road diet improves safety by reducing crash risk, calming speeds, adding shoulder space for larger vehicles, making pedestrian crossings safer, and offering a low-cost way to enhance corridor operations.

Crashes are reduced by eliminating the need for drivers to weave between two same-direction lanes and by providing a dedicated center left-turn lane. This significantly reduces left-turn conflict points, which are a major source of rear-end and angle crashes on four-lane undivided roads. With turning movements shifted out of the through lane, traffic flows more smoothly and drivers experience fewer unexpected stops, creating a safer and more predictable corridor. The dedicated center turn lane also makes turning movements safer by giving drivers a protected place to wait rather than stopping in a travel lane. In the last ten years, there have been 16 total crashes reported along the corridor, eight of which were rear end crashes.

Speeds are reduced by narrowing the roadway and reducing the number of travel lanes, which encourages drivers to travel at more consistent, safer speeds. With only one through lane in each direction, lane-weaving is reduced and speed differentials between vehicles decrease.

Currently, the immediate adjacency of the right lane to the curbline prevents larger vehicles from making right turns from the right-most lane, they must turn from the left lane, creating a safety hazard for other drivers. The reallocated cross-section provides shoulder space that gives larger vehicles more room to turn safely.

Pedestrian safety is improved by reducing the number of travel lanes people must cross and by slowing vehicle speeds, which improves driver yielding and reaction time. With fewer conflict points and more predictable vehicle movements, pedestrians experience shorter exposure time in the roadway. The reconfigured layout can also provide space for features such as refuge islands. A potential refuge island is currently being evaluated along the corridor near Hamlet Avenue and Harkness Avenue, which have been previous areas of pedestrian safety concerns.

A road diet is low-cost because the only changes required are pavement markings. The existing geometry on 95th Street does not support dedicated right-turn lanes, but the lane reallocation still provides safety benefits without the need for roadway widening. Because 95th Street is being proposed for this year's Mill and Overlay project, implementing the lane reallocation now is the most cost-effective option, as full-length restriping is already included in the project after the street is resurfaced.

There may be an adjustment period as drivers adapt to the new configuration, and some residents or businesses may initially express concerns about changes in traffic patterns. These issues are generally manageable with careful design and monitoring. Staff plans on communicating with 95th Street businesses and residents of this potential change.

95th Street is a good candidate for this lane reallocation because the major collector currently carries just over 7,000 vehicles per day from Jamaica Avenue. This daily traffic volume is low for a four-lane segment, indicating the roadway is underutilized. Road diets with these traffic levels

typically perform well and can improve both safety and operations. The traffic volume suggests that the corridor can function effectively with one through lane in each direction.

95th Street from Hadley Ave. to Jamaica Ave. is planned to be included in the 2026 Mill and Overlay Improvements, which will be presented to the City Council this spring for approval of plans and authorization to bid.

## Recommendation

Receive information on the 95th Street Lane Reallocation and provide feedback to Staff.